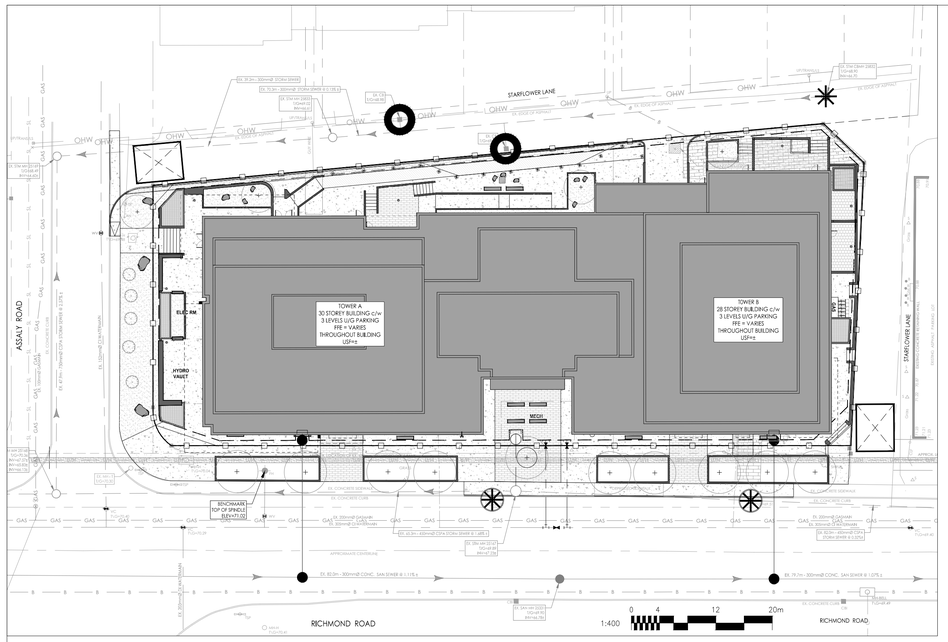

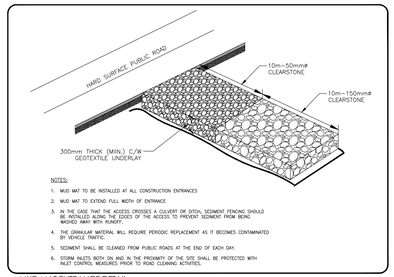

MUD MAT ENTRANCE DETAIL
SCALE: N.T.S.

NOTES:

1. MUD MAT TO BE INSTALLED AT ALL CONSTRUCTION ENTRANCES
2. MUD MAT TO EXTEND FULL WIDTH OF ENTRANCE
3. IN THE CASE THAT THE ACCESS CROSSES A CULVERT OR DITCH, SEDIMENT FENCING SHOULD BE INSTALLED ALONG THE EDGES OF THE ACCESS TO PREVENT SEDIMENT FROM BEING WASHED AWAY WITH RUNOFF.
4. THE GRANULAR MATERIAL WILL REQUIRE PERIODIC REPLACEMENT AS IT BECOMES CONTAMINATED BY VEHICLE TRAFFIC.
5. SEDIMENT SHALL BE CLEANED FROM PUBLIC ROADS AT THE END OF EACH DAY.
6. STORM INLETS (BOTH ON AND IN THE PROXIMITY OF THE SITE SHALL BE PROTECTED WITH INLET CONTROL MEASURES PRIOR TO ROAD CLEANING ACTIVITIES.

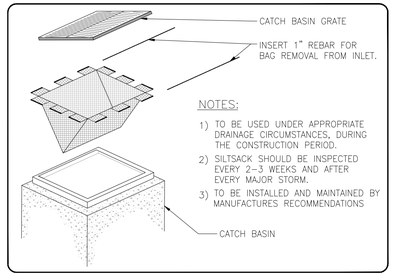

NOTES:

1) TO BE USED UNDER APPROPRIATE DRAINAGE CIRCUMSTANCES, DURING THE CONSTRUCTION PERIOD.
2) SILTSACK SHOULD BE INSPECTED EVERY 2–3 WEEKS AND AFTER EVERY MAJOR STORM.
3) TO BE INSTALLED AND MAINTAINED BY MANUFACTURES RECOMMENDATIONS

ROADSIDE CATCH BASIN PROTECTION DETAIL: TERRAFIX SILTSACK
SCALE: N.T.S.

FLEXSTORM P/Ns 62MHDRFX & 62MHDRFXP

RD INLET TYPE: RAISED CAST IRON FRAME AND ROUND GRATE

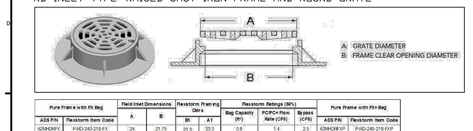

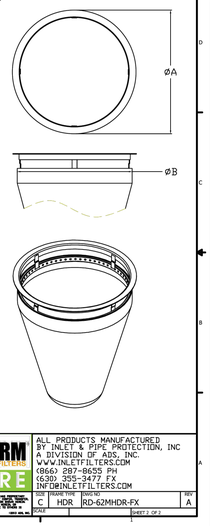

Pure Frame with FX Bag		Field Inlet Dimensions		Flexstorm Framing Dims		Flexstorm Ratings (80%)			Pure Frame with FX+ Bag	
		A	B	B1	A1	Bag Capacity (ft³)	PCPC+ Flow Rate (CFS)	Bypass (CFS)		
ADS P/N	Flexstorm Item Code								ADS P/N	Flexstorm Item Code
62MHDRFX	P-RD-240-218-FX	24	21.75	21.5	23.3	0.8	1.4	2.5	62MHDRFXP	P-RD-240-218-FXP
62MHDRFX	P-RD-235-220-FX	23.25	22	21.5	23.3	0.7	1.3	2.5	62MHDRFXP	P-RD-235-220-FXP
62MHDRFX	P-RD-235-220-FX	23.75	22	21.5	23.3	0.8	1.4	2.5	62MHDRFXP	P-RD-235-220-FXP
62MHDRFX	P-RD-235-220-FX	23.67	22	21.5	23.3	0.8	1.4	2.5	62MHDRFXP	P-RD-235-220-FXP
62MHDRFX	P-RD-260-220-FX	26	22	21.5	23.3	0.8	1.4	2.5	62MHDRFXP	P-RD-260-220-FXP
62MHDRFX	P-RD-235-221-FX	23.75	22.125	21.5	23.3	0.8	1.4	2.5	62MHDRFXP	P-RD-235-221-FXP
62MHDRFX	P-RD-235-223-FX	23.75	22.25	20.5	22.5	0.7	1.3	2.4	62MHDRFXP	P-RD-235-223-FXP
62MHDRFX	P-RD-235-223-FX	23.75	22.25	21.5	23.3	0.8	1.4	2.5	62MHDRFXP	P-RD-235-223-FXP
62MHDRFX	P-RD-240-223-FX	24	22.25	21.5	23.3	0.8	1.5	2.5	62MHDRFXP	P-RD-240-223-FXP
62MHDRFX	P-RD-235-224-FX	23.75	22.375	21.5	23.3	0.8	1.4	2.5	62MHDRFXP	P-RD-235-224-FXP
62MHDRFX	P-RD-235-224-FX	23.67	22.375	21.5	23.3	0.8	1.4	2.5	62MHDRFXP	P-RD-235-224-FXP
62MHDRFX	P-RD-239-225-FX	23.75	22.5	21.5	23.3	0.8	1.4	2.5	62MHDRFXP	P-RD-239-225-FXP
62MHDRFX	P-RD-240-225-FX	24	22.5	21.5	23.3	0.8	1.4	2.5	62MHDRFXP	P-RD-240-225-FXP
62MHDRFX	P-RD-248-225-FX	24.75	22.52	22.5	24.5	0.8	1.6	2.6	62MHDRFXP	P-RD-248-225-FXP
62MHDRFX	P-RD-239-226-FX	23.67	22.75	21.5	23.3	0.8	1.4	2.5	62MHDRFXP	P-RD-239-226-FXP
62MHDRFX	P-RD-236-230-FX	23.75	23	21.5	23.3	0.8	1.4	2.5	62MHDRFXP	P-RD-236-230-FXP
62MHDRFX	P-RD-240-230-FX	24	23	21.5	23.3	0.8	1.4	2.5	62MHDRFXP	P-RD-240-230-FXP
62MHDRFX	P-RD-250-230-FX	25	23	22.5	24.5	0.9	1.4	2.6	62MHDRFXP	P-RD-250-230-FXP
62MHDRFX	P-RD-254-230-FX	25.25	23	22.5	24.5	0.9	1.4	2.6	62MHDRFXP	P-RD-254-230-FXP
62MHDRFX	P-RD-250-230-FX	25.62	23	22.5	24.5	0.9	1.4	2.6	62MHDRFXP	P-RD-250-230-FXP
62MHDRFX	P-RD-255-230-FX	25.75	23	22.5	24.5	0.9	1.4	2.6	62MHDRFXP	P-RD-255-230-FXP
62MHDRFX	P-RD-248-234-FX	24.75	23.375	22.5	24.5	0.9	1.4	2.5	62MHDRFXP	P-RD-248-234-FXP
62MHDRFX	P-RD-260-235-FX	26	23.5	23.5	25.5	0.9	1.5	2.7	62MHDRFXP	P-RD-260-235-FXP
62MHDRFX	P-RD-255-236-FX	25.75	23.62	23.5	25.5	0.9	1.5	2.7	62MHDRFXP	P-RD-255-236-FXP
62MHDRFX	P-RD-258-238-FX	25.75	23.812	23.5	25.5	0.9	1.5	2.7	62MHDRFXP	P-RD-258-238-FXP
62MHDRFX	P-RD-253-240-FX	25.25	24	22.5	24.5	0.9	1.5	2.6	62MHDRFXP	P-RD-253-240-FXP
62MHDRFX	P-RD-258-240-FX	25.75	24	23.5	25.5	0.9	1.5	2.7	62MHDRFXP	P-RD-258-240-FXP
62MHDRFX	P-RD-260-240-FX	26	24	23.5	25.5	1.0	1.5	2.7	62MHDRFXP	P-RD-260-240-FXP
62MHDRFX	P-RD-266-240-FX	26.75	24	23.5	24.5	1.0	1.5	2.7	62MHDRFXP	P-RD-266-240-FXP
62MHDRFX	P-RD-260-241-FX	26	24.1	23.5	25.5	1.0	1.5	2.7	62MHDRFXP	P-RD-260-241-FXP
62MHDRFX	P-RD-263-241-FX	26.25	24.1	23.5	25.5	1.0	1.5	2.7	62MHDRFXP	P-RD-263-241-FXP
62MHDRFX	P-RD-258-241-FX	25.75	24.125	23.5	25.5	0.9	1.5	2.7	62MHDRFXP	P-RD-258-241-FXP
62MHDRFX	P-RD-258-243-FX	25.75	24.25	23.5	25.5	0.9	1.5	2.7	62MHDRFXP	P-RD-258-243-FXP

NOTES:

1. RATINGS SHOWN ARE FOR STANDARD 22" BAG DEPTH; "SHORT" 12" DEPTH BAGS ARE AVAILABLE WITH -S SUFFIX; RATINGS REDUCED BY ~50%.
2. THE FOLLOWING REQUIRES ADDITIONAL REVIEW
-GRATES WITH EXTENDED BOTTOMS
-ANY OBSTRUCTED INLET OPENINGS

FLEXSTORM INLET FILTERS PURE

ALL PRODUCTS MANUFACTURED BY INLET & PIPE PROTECTION, INC
A DIVISION OF ADS, INC.
WWW.INLETFILTERS.COM
(866) 287-8655 PH
(630) 355-3477 FX
INFO@INLETFILTERS.COM

SIZE	DRAWING TYPE	DRAWING No.	REV
C	HDR	RD-62MHDR-FX	A
SCALE		SHEET 2 OF 2	

FLEXSTORM P/Ns 62LHDRFX & 62LHDRFXP

RD INLET TYPE: RAISED CAST IRON FRAME AND ROUND GRATE

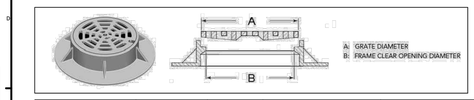

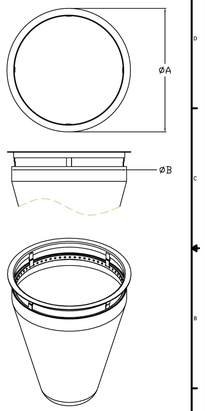

Pure Frame with FX Bag		Field Inlet Dimensions		Flexstorm Framing Dims		Flexstorm Ratings (Flow at 50% max)			Pure Frame with FX+ Bag	
		A	B	B1	A1	Bag Capacity (ft³)	PCPC+ Flow Rate (CFS)	Bypass (CFS)		
ADS P/N	Flexstorm Item Code								ADS P/N	Flexstorm Item Code
62LHDRFX	P-RD-275-252-FX	27.5	25.125	25.0	27.0	2.1	1.6	5.5	62LHDRFXP	P-RD-275-252-FXP
62LHDRFX	P-RD-275-258-FX	27.5	25.75	25.0	27.0	2.2	1.6	5.8	62LHDRFXP	P-RD-275-258-FXP
62LHDRFX	P-RD-279-260-FX	27.875	26	25.0	27.0	2.2	1.6	5.8	62LHDRFXP	P-RD-279-260-FXP
62LHDRFX	P-RD-290-270-FX	29	27	26.5	28.5	2.4	1.7	6.1	62LHDRFXP	P-RD-290-270-FXP
62LHDRFX	P-RD-288-271-FX	28.75	27.125	26.5	28.5	2.4	1.7	6.1	62LHDRFXP	P-RD-288-271-FXP
62LHDRFX	P-RD-318-300-FX	31.75	30	29.5	31.5	3.0	1.9	6.8	62LHDRFXP	P-RD-318-300-FXP
62LHDRFX	P-RD-319-300-FX	31.87	30	29.5	31.5	3.0	1.9	6.8	62LHDRFXP	P-RD-319-300-FXP
62LHDRFX	P-RD-320-300-FX	32	30	29.5	31.5	3.0	1.9	6.8	62LHDRFXP	P-RD-320-300-FXP
62LHDRFX	P-RD-323-303-FX	32.25	30.25	29.5	31.5	3.1	1.9	6.8	62LHDRFXP	P-RD-323-303-FXP
62LHDRFX	P-RD-341-315-FX	34.125	31.5	31.3	33.3	3.3	2.0	7.2	62LHDRFXP	P-RD-341-315-FXP
62LHDRFX	P-RD-341-323-FX	34.125	32.25	32.0	34.0	3.5	2.0	7.4	62LHDRFXP	P-RD-341-323-FXP
62LHDRFX	P-RD-343-323-FX	34.25	32.25	32.0	34.0	3.5	2.0	7.4	62LHDRFXP	P-RD-343-323-FXP
62LHDRFX	P-RD-341-325-FX	34.125	32.5	32.0	34.0	3.5	2.0	7.4	62LHDRFXP	P-RD-341-325-FXP
62LHDRFX	P-RD-360-340-FX	36	34	33.5	35.5	3.9	2.1	7.8	62LHDRFXP	P-RD-360-340-FXP
62LHDRFX	P-RD-360-360-FX	36	36	35.5	37.5	4.4	2.3	8.2	62LHDRFXP	P-RD-360-360-FXP

NOTES:

1. RATINGS SHOWN ARE FOR STANDARD 22" BAG DEPTH; "SHORT" 12" DEPTH BAGS ARE AVAILABLE WITH -S SUFFIX; RATINGS REDUCED BY ~50%.
2. THE FOLLOWING REQUIRES ADDITIONAL REVIEW
-GRATES WITH EXTENDED BOTTOMS
-ANY OBSTRUCTED INLET OPENINGS

FLEXSTORM INLET FILTERS PURE

ALL PRODUCTS MANUFACTURED BY INLET & PIPE PROTECTION, INC
A DIVISION OF ADS, INC.
WWW.INLETFILTERS.COM
(866) 287-8655 PH
(630) 355-3477 FX
INFO@INLETFILTERS.COM

SIZE	DRAWING TYPE	DRAWING No.	REV
C	HDR	RD-62LHDR-FX	A
SCALE		SHEET 1 OF 1	

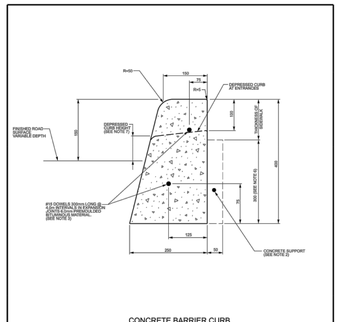

NOTES:
1. THE FULL CURB DEPTH SHALL BE CARRIED THROUGH THE DEPRESSED ACCESS CROSSING.
2. A CONCRETE SUPPORT IS REQUIRED WHEN BUILT ADJACENT TO THE SIDEWALK.
3. IF (A) EXTRUSION CLEARS SIDEWALK BY 25mm:
THE EXPANSION BITUMINOUS MATERIAL AND THE #15 DOWELS ARE TO BE PLACED AT THE END OF THE EXTRUSION.
4. ALL DIMENSIONS ARE IN MILLIMETRES UNLESS SHOWN OTHERWISE.
5. DUMMY JOINTS SHALL BE 25mm DEEP, FRONT, BACK AND TOP OF SECTION AT 4m SPACING OR MATCH JOINTING WHERE SIDEWALK IS ADJACENT.
6. FOR DEPRESSED CURB AT ENTRANCES USE 25S.
7. DEPRESSED CURB HEIGHT - FOR PEDESTRIAN CURB RAMPS 0 TO 6 mm AND FOR PRIVATE ENTRANCES 0 TO 13mm.

N.T.S.

Ottawa — CONCRETE BARRIER CURB FOR GRANULAR BASE PAVEMENT (MODIFIED OPSD-600.110)

DATE:	JANUARY 2003
REV DATE:	MARCH 2021
DWG. No.:	SC1.1

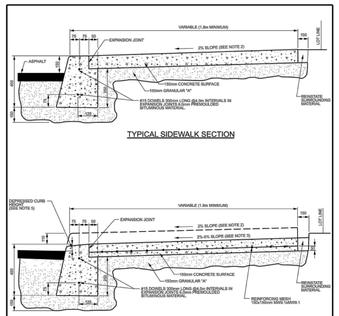

NOTES:
1. ALL DIMENSIONS ARE IN MILLIMETRES UNLESS SHOWN OTHERWISE.
2. THE MAXIMUM SLOPE IS NOT TO EXCEED 2%.
3. FOR CURB RAMPS, SLOPE OF 2% TO 5%, MAXIMUM 8%.
4. EXPANSION AND DUMMY JOINTS AS PER SC3.
5. DEPRESSED CURB HEIGHT - FOR PEDESTRIAN CURB RAMPS 0 TO 6 mm AND FOR PRIVATE ENTRANCES 0 TO 13 mm.

N.T.S.

Ottawa — CONCRETE BARRIER CURB WITH SIDEWALK

DATE:	JANUARY 2003
REV DATE:	MARCH 2021
DWG. No.:	SC1.4

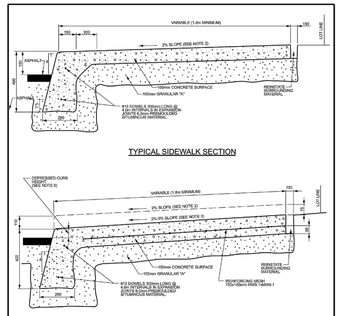

NOTES:
1. ALL DIMENSIONS ARE IN MILLIMETRES UNLESS SHOWN OTHERWISE.
2. THE MAXIMUM SLOPE IS NOT TO EXCEED 2%.
3. FOR CURB RAMPS, SLOPE OF 2% TO 5%, MAXIMUM 8%.
4. EXPANSION AND DUMMY JOINTS AS PER SC3.
5. DEPRESSED CURB HEIGHT - FOR PEDESTRIAN CURB RAMPS 0 TO 6 mm AND FOR PRIVATE ENTRANCES 0 TO 13 mm.

N.T.S.

Ottawa — MONOLITHIC CONCRETE CURB AND SIDEWALK

DATE:	MAY 2001
REV DATE:	MARCH 2021
DWG. No.:	SC2

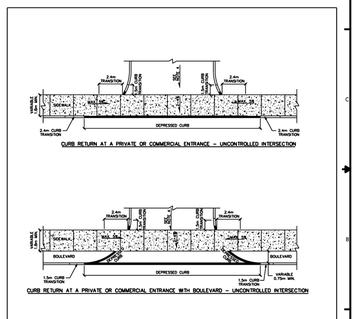

CURB RETURN AT A PRIVATE OR COMMERCIAL ENTRANCE – UNCONTROLLED INTERSECTION

CURB RETURN AT A PRIVATE OR COMMERCIAL ENTRANCE WITH BOULEVARD – UNCONTROLLED INTERSECTION

NOTES:
1. ALL DIMENSIONS ARE IN MILLIMETRES UNLESS SHOWN OTHERWISE.
2. CURB DETAILS SEE SC1.1, SC1.2 AND SC1.3.
3. SIDEWALK DETAILS SEE SC2 AND SC3.
4. MAXIMUM SLOPE VARIES, SEE PRIVATE APPROACH BYLAW.
5. UNCONTROLLED INTERSECTION MEANS AN ENTRANCE NOT LOCATED AT A TRAFFIC SIGNAL OR ALL-WAY STOP CONTROL.

Ottawa — CURB RETURN ENTRANCES - UNCONTROLLED INTERSECTIONS

DATE:	MARCH 2007
REV DATE:	MARCH 2021
DWG. No.:	SC7.1

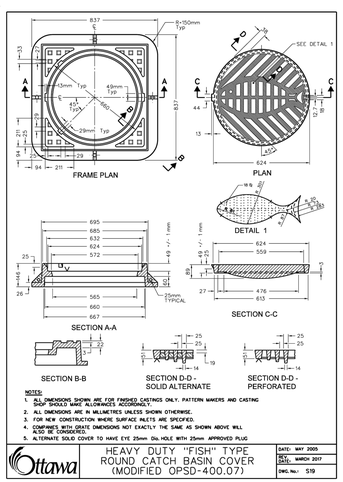

NOTES:
1. ALL DIMENSIONS SHOWN ARE FOR FINISHED CASTINGS ONLY. PATTERN MAKERS AND CASTING SHOP SHOULD MAKE ALLOWANCES ACCORDINGLY.
2. ALL DIMENSIONS ARE IN MILLIMETRES UNLESS SHOWN OTHERWISE.
3. FOR NEW CONSTRUCTION WHERE SURFACE INLETS ARE SPECIFIED, COMPANIES WITH GRATE DIMENSIONS NOT EXACTLY THE SAME AS SHOWN ABOVE WILL ALSO BE CONSIDERED.
4. ALTERNATE SOLID COVER TO HAVE EYE 25mm Dia. HOLE WITH 25mm APPROVED PLUG.

Ottawa — HEAVY DUTY "FISH" TYPE ROUND CATCH BASIN COVER (MODIFIED OPSD-400.07)

DATE:	MAY 2005
REV DATE:	MARCH 2017
DWG. No.:	S19

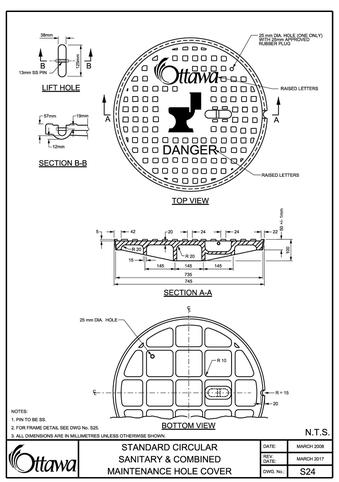

NOTES:
1. PIN TO BE SS.
2. FOR FRAME DETAIL SEE DWG No. S25.
3. ALL DIMENSIONS ARE IN MILLIMETRES UNLESS OTHERWISE SHOWN.

N.T.S.

Ottawa — STANDARD CIRCULAR SANITARY & COMBINED MAINTENANCE HOLE COVER

DATE:	MARCH 2008
REV DATE:	MARCH 2017
DWG. No.:	S24

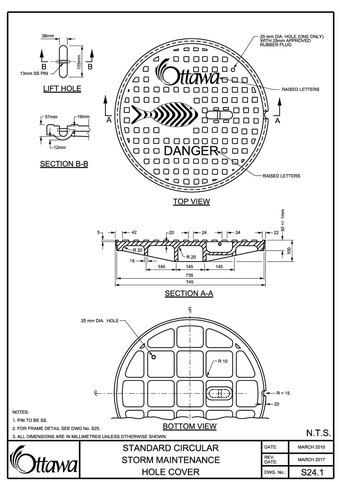

NOTES:
1. PIN TO BE SS.
2. FOR FRAME DETAIL SEE DWG No. S25.
3. ALL DIMENSIONS ARE IN MILLIMETRES UNLESS OTHERWISE SHOWN.

N.T.S.

Ottawa — STANDARD CIRCULAR STORM MAINTENANCE HOLE COVER

DATE:	MAY 2001
REV DATE:	MARCH 2017
DWG. No.:	S24.1

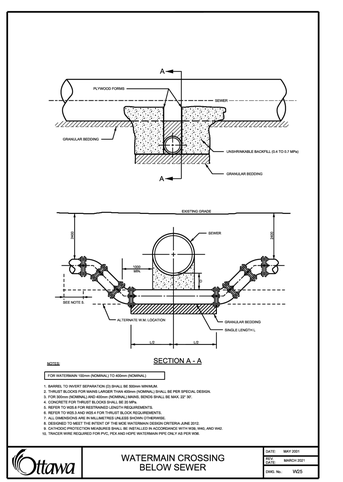

NOTES:
1. BARREL TO INVERT SEPARATION (D) SHALL BE 350mm MINIMUM.
2. FOR 300mm (NOMINAL) AND 400mm (NOMINAL) WATERMAINS, SEWER (S) SHALL BE PER SPECIAL DESIGN.
3. FOR 350mm (NOMINAL) AND 450mm (NOMINAL) MAINS, SEWER (S) SHALL BE MAX. 22° 30'.
4. CONCRETE FOR THRUST BLOCKS SHALL BE 20 MPa.
5. REFER TO WDS-3 FOR RESTRAINED LENGTH REQUIREMENTS.
6. REFER TO WDS-3 AND WDS-4 FOR THRUST BLOCK REQUIREMENTS.
7. WATERMAIN PIPE SHALL BE PLACED ON UNDISTURBED GROUND.
8. DESIGNED TO MEET THE INTENT OF THE WEB WATERMAIN DESIGN CRITERIA JUNE 2012.
9. CATHODIC PROTECTION MEASURES SHALL BE INSTALLED IN ACCORDANCE WITH W86, W40, AND W42.
10. TRACER WIRE REQUIRED FOR PVC, PE4 AND HDPE WATERMAIN PIPE ONLY AS PER W86.

Ottawa — WATERMAIN CROSSING BELOW SEWER

DATE:	MAY 2001
REV DATE:	MARCH 2021
DWG. No.	WD5

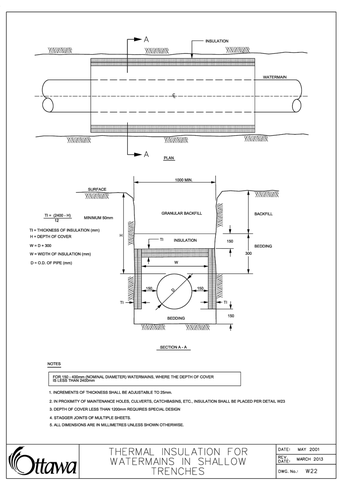

NOTES:
CAN 150 – 400mm (NOMINAL DIAMETER) WATERMAINS, WHERE THE DEPTH OF COVER IS LESS THAN 2400mm

1. INCREMENTS OF THICKNESS SHALL BE ADJUSTABLE TO 25mm.
2. IN PROXIMITY OF MAINTENANCE HOLES, CULVERTS, CATCHBASINS, ETC., INSULATION SHALL BE PLACED PER DETAIL W23
3. DEPTH OF COVER LESS THAN 1800mm REQUIRES SPECIAL DESIGN
4. STAGGER JOINTS OF MULTIPLE SHEETS.
5. ALL DIMENSIONS ARE IN MILLIMETRES UNLESS SHOWN OTHERWISE.

Ottawa — THERMAL INSULATION FOR WATERMAINS IN SHALLOW TRENCHES

DATE:	MAY 2001
REV DATE:	MARCH 2013
DWG. No.:	W22

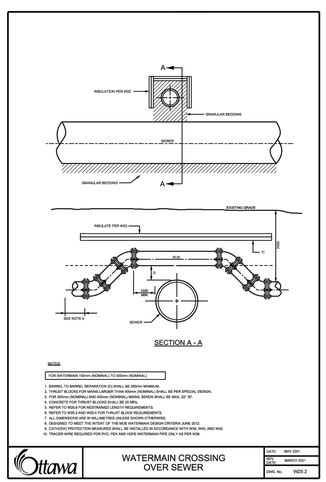

NOTES:
FOR 150 – 400mm (NOMINAL DIAMETER) WATERMAINS, WHERE THE DEPTH OF COVER IS LESS THAN 2400mm

1. BARREL TO BARREL SEPARATION (D) SHALL BE 250mm MINIMUM.
2. FOR 300mm (NOMINAL) AND 400mm (NOMINAL) WATERMAINS, SEWER (S) SHALL BE PER SPECIAL DESIGN.
3. FOR 350mm (NOMINAL) AND 450mm (NOMINAL) MAINS, SEWER (S) SHALL BE MAX. 22° 30'.
4. CONCRETE FOR THRUST BLOCKS SHALL BE 20 MPa.
5. REFER TO WDS-3 FOR RESTRAINED LENGTH REQUIREMENTS.
6. REFER TO WDS-3 AND WDS-4 FOR THRUST BLOCK REQUIREMENTS.
7. WATERMAIN PIPE SHALL BE PLACED ON UNDISTURBED GROUND.
8. DESIGNED TO MEET THE INTENT OF THE WEB WATERMAIN DESIGN CRITERIA JUNE 2012.
9. CATHODIC PROTECTION MEASURES SHALL BE INSTALLED IN ACCORDANCE WITH W86, W40, AND W42.
10. TRACER WIRE REQUIRED FOR PVC, PE4 AND HDPE WATERMAIN PIPE ONLY AS PER W86.

Ottawa — WATERMAIN CROSSING OVER SEWER

DATE:	MAY 2001
REV DATE:	MARCH 2021
DWG. No.	WD5.2

Stantec

Stantec Consulting Ltd.
400 - 1331 Clyde Avenue
Ottawa ON
Tel. 613.722.4420
www.stantec.com

Copyright Reserved

The Contractor shall verify and be responsible for all dimensions. DO NOT scale the drawing - any errors or omissions shall be reported to Stantec without delay.
The Copyrights to all designs and drawings are the property of Stantec. Reproduction or use for any purpose other than that authorized by Stantec is forbidden.

Legend

- PROPOSED SILT FENCE BOUNDARY AS PER OPSD 219.110
- PROPOSED CONSTRUCTION FENCING
- PROPOSED CATCH BASIN PROTECTION AS PER FLEX STORM INLET FILTERS DETAIL. ITEM CODE P-RD-240-223-FX
- PROPOSED CATCH BASIN MH PROTECTION AS PER FLEX STORM INLET FILTERS DETAIL. ITEM CODE P-RD-290-270-FX
- PROPOSED CATCH BASIN PROTECTION AS PER TERRAFIX SILTSACK DETAIL
- PROPOSED MUD MAT LOCATION
- PROPOSED VALVE BOX
- PROPOSED VALVE CHAMBER
- PROPOSED FIRE HYDRANT
- PROPOSED SANITARY SEWER MANHOLE
- PROPOSED STORM SEWER MANHOLE
- PROPOSED CATCHBASIN

Best Management Practices

CONTRACTOR TO PROVIDE EROSION AND SEDIMENT CONTROLS (BEST MANAGEMENT PRACTICES) DURING CONSTRUCTION OF THIS PROJECT.

EROSION MUST BE MINIMIZED AND SEDIMENTS MUST BE REMOVED FROM CONSTRUCTION SITE RUN-OFF IN ORDER TO PROTECT DOWNSTREAM AREAS. DURING ALL CONSTRUCTION, EROSION AND SEDIMENTATION SHOULD BE CONTROLLED BY THE FOLLOWING TECHNIQUES:

1. LIMIT THE EXTENT OF EXPOSED SOILS AT ANY GIVEN TIME.
2. REVEGETATE EXPOSED AREAS AND SLOPES AS SOON AS POSSIBLE.
3. MINIMIZE AREA TO BE CLEARED AND GRUBBED.
4. PROTECT EXPOSED SLOPES WITH PLASTIC OR SYNTHETIC MULCHES.
5. INSTALL CATCH BASIN INSERTS OR EQUIVALENT IN ALL PROPOSED CATCH BASINS AND CATCH BASIN MANHOLES AND IN ALL EXISTING CATCH BASINS THAT WILL RECEIVE RUN-OFF FROM THE SITE.
6. A SILT FENCE SHALL BE INSTALLED AROUND THE PERIMETER OF ALL AND ANY STOCKPILES OF MATERIAL TO BE USED OR REMOVED FROM SITE. (LOCATION TO BE DETERMINED)
7. A VISUAL INSPECTION SHALL BE DONE DAILY ON SEDIMENT CONTROL MEASURES AND CLEANED OF ANY ACCUMULATED SILT AS REQUIRED. THE DEPOSITS WILL BE DISPOSED OFF SITE AS PER THE REQUIREMENTS OF THE CONTRACT.
8. SEDIMENT CONTROL BARRIERS MAY ONLY BE REMOVED TEMPORARILY WITH APPROVAL OF CONTRACT ADMINISTRATOR TO ACCOMODATE CONSTRUCTION OPERATIONS. ALL AFFECTED BARRIERS MUST BE REINSTATED AT NIGHT WHEN CONSTRUCTION IS COMPLETED. NO REMOVAL WILL OCCUR IF THERE IS A SIGNIFICANT RAINFALL EVENT ANTICIPATED (>10mm) UNLESS A NEW DEVICE HAS BEEN INSTALLED TO PROTECT EXISTING STORM AND SANITARY SEWER SYSTEMS, OR DOWNSTREAM WATERCOURSES.
9. NO REFUELING OR CLEANING OF EQUIPMENT IS PERMITTED NEAR ANY EXISTING WATERWAY.
10. CONTRACTOR SHALL REMOVE SEDIMENT CONTROL MEASURES WHEN, IN THE OPINION OF THE CONTRACT ADMINISTRATOR, THE MEASURE(S) IS NO LONGER REQUIRED. NO CONTROL MEASURES SHALL BE PERMANENTLEY REMOVED WITHOUT PRIOR WRITTEN AUTHORIZATION FROM THE CONTRACT ADMINISTRATOR.
11. THE CONTRACTOR SHALL PERIODICALLY, OR WHEN REQUESTED BY THE CONTRACT ADMINISTRATOR, CLEAN OUT ACCUMULATED SEDIMENTS AS REQUIRED.
12. THE CONTRACTOR SHALL IMMEDIATELY REPORT TO THE ENGINEER ANY ACCIDENTAL DISCHARGES OF SEDIMENT MATERIAL INTO THE WATERCOURSE. APPROPRIATE RESPONSE MEASURES, INCLUDING ANY REPAIRS TO EXISTING CONTROL MEASURES OR THE IMPLEMENTATION OF ADDITIONAL CONTROL MEASURES, SHALL BE CARRIED OUT BY THE CONTRACTOR WITHOUT DELAY.
13. CONTRACTOR SHALL INSTALL MUD MATS AT BOTH ENTRANCES TO THE SITE.
14. STORMWATER SWALES TO BE COVERED WITH HYDRO-SEED AND MULCH.

Revision	By	Appd.	YY.MM.DD
2 REVISED AS PER CITY COMMENTS	MJS	PM	25.04.22
1 REVISED AS PER CITY COMMENTS	MJS	PM	24.09.04
0 ISSUED FOR SPA	MJS	PM	23.06.01

File Name: 160401697 D8.dwg	MJS	DT	MJS	23.05.01
	Dwn.	Chkd.	Dsgn.	YY.MM.DD

Permit-Seal

LICENSED PROFESSIONAL ENGINEER
P. MOROZ
90493552
2025-04-30
PROVINCE OF ONTARIO

Client/Project

BRIGIL HOMES
CLIENT2

1299 RICHMOND ROAD
MIXED USE TOWER DEVELOPMENT
OTTAWA, ON, CANADA

Title

EROSION CONTROL PLAN AND DETAIL SHEET

Project No.	Scale
160401697	

Drawing No.	Sheet	Revision
EC/DS-1	5 of 7	2

ORIGINAL SHEET - ARCH D

V:\1-01-Ottawa\160401697\design\drawings\160401697 D8.dwg
2023/04/22 4:57 PM By: Morozp, Mike