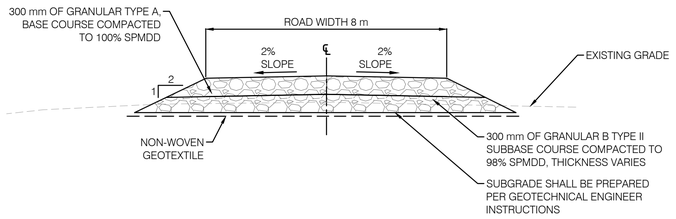


## TYPICAL ROAD SECTION IN FILL - FOR MAIN ACCESS TO THE SITE
SCALE: N.T.S.

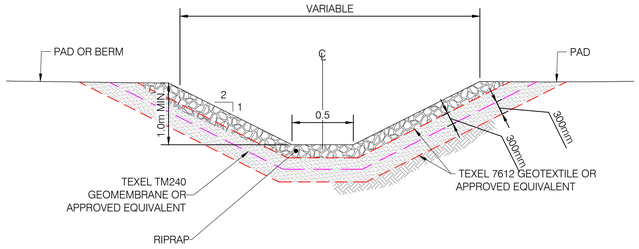


## TYPICAL SECTION - PAD DITCH
SCALE: N.T.S.

NOTES:

1. PROJECT COORDINATES ARE SET IN NAD83 (CSRS) MTM ZONE 9 PROJECTION.
2. COORDINATES ARE IN METERS AND ELEVATIONS ARE GEODETIC AND IN METERS.
3. THE DEVELOPER SHALL EMPLOY A PROFESSIONAL GEOTECHNICAL ENGINEER WITH EXPERIENCE IN IN-SITU COMPACTION AND DENSITY TESTING DURING THE PREPARATION OF THE SUB-GRADE AND CONSTRUCTION OF THE ROAD STRUCTURE TO VERIFY THE ADEQUACY OF THE PROPOSED AND EXISTING ROAD STRUCTURE AND SUB-GRADE.
4. PREPARATION AND CONSTRUCTION OF THE PROPOSED ACCESS ROAD INCLUDING MATERIAL TYPE, THICKNESSES AND COMPACTION EFFORTS SHALL BE COMPLETED IN ACCORDANCE WITH THE GEOTECHNICAL RECOMMENDATIONS PROVIDED BY HATCH IN THE REPORT "SOUTH MARCH ROAD BATTERY ENERGY STORAGE SYSTEM (BESS) PRELIMINARY GEOTECHNICAL INVESTIGATION", PROJECT #H375142-0000-2A0-230-0001, REV.A, DATED FEBRUARY 28, 2025.
5. PROPOSED MANHOLES WITHIN THE ROAD ALLOWANCE MUST BE ADJUSTED TO SUIT THE PROPOSED FINISHED GRADE.
6. ALL LOOSE, ORGANIC, DELETERIOUS MATERIALS, OR SOFT SPOTS MUST BE EXCAVATED AND REMOVED FROM THE ROADWAY AND UTILITY TRENCHES WITHIN THE ROADWAY. THESE AREAS SHALL BE REPLACED WITH ADEQUATE ENGINEERED FILL IN ACCORDANCE WITH THE GEOTECHNICAL CONSULTANT'S REPORT OR AS DIRECTED BY THE CITY.
7. PRIOR TO CONSTRUCTION, THE CONTRACTOR SHALL EXPOSE AND CONFIRM THE LOCATIONS AND ELEVATIONS OF ALL EXISTING UTILITIES, AND ADVISE THE ENGINEER OF ANY POTENTIAL CONFLICTS. EXISTING UTILITIES SHOWN ARE BASED ON SURVEY PROVIDED BY TULLOCH GEOMATICS INC., "241451-FITZROY_BESS-MTM9-REV0.DWG BY TULLOCH GEOMATICS INC, DATED MARCH 11, 2025.
8. ROAD DIMENSIONS AND TURNING RADIUS HAVE BEEN DESIGNED TO ACCOMMODATE A TRIDEM DRIVE TRACTOR SEMITRAILER TRUCK AND THE LR 1300.1 SX CRAWLER CRANE. IN ADDITION, ROAD GEOMOTRY HAS BEEN DESIGNED TO ACCOMMODATE A LOWBOY SEMI-TRAILER DURING THE CONSTRUCTION PHASE. REVIEW OF ACCESS FOR DELIVERY AND INSTALLATION OF EQUIPMENT/STRUCTURES IS THE RESPONSIBILITY OF THE CONTRACTOR.
9. ALL REQUIRED PERMITS MUST BE IN PLACE BEFORE START OF CONSTRUCTION.
10. SITE FROST DEPTH IS 1.8 m PER GEOTECHNICAL INVESTIGATION REPORT.
11. BASED ON THE GEOTECHNICAL INFORMATION PROVIDED BY HATCH, AVERAGE TOPSOIL THICKNESS RANGED ON SITE BETWEEN 100 AND 600 mm.

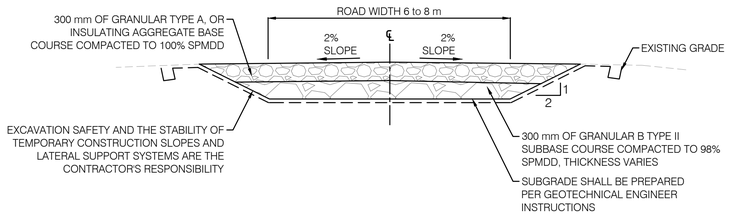


## TYPICAL ROAD SECTION IN CUT - FOR MAIN ACCESS ROAD TO THE SITE
SCALE: N.T.S.

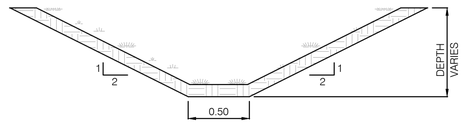


## TYPICAL SECTION - DIVERSION DITCH
SCALE: N.T.S.

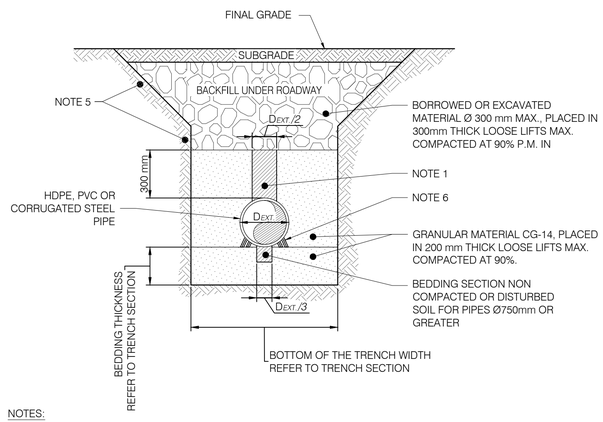


NOTES:

1. COMPACTION EQUIPEMENT SHALL NOT CIRCULATE IN THIS AREA.
2. USE GRANULAR MATERIAL CG-14, ACCORDING TO THE REQUIREMENTS NQ 2560-114 STANDARD.
3. $D_{EXT.}$ IS THE OUTSIDE DIAMETER OF THE PIPE, MESURED IN MILLIMETERS.
4. VIBRATING PLATE, VIBRATING ROLLER OR RAMMER WITH TOTAL APPLIED FORCE NOT TO EXCEED 50kN ARE THE ONLY COMPACTING EQUIPEMENT ALLOWED TO COMPACT THE FIRST METER ABOVE THE PIPE.
5. EXCAVATION SLOPES ARE NOT RESTRICTED TO SLOPES SHOWN ON DRAWING. THE EXCAVATION MUST MEET THE REQUIREMENTS OF THE "OCCUPATIONAL HEALTH AND SAFETY ACT", NAMELY THE REQUIREMENTS FOR MATERIAL STORAGE, CIRCULATION OF VEHICLES NEAR THE EXCAVATION AND STABILITY OF THE SLOPES.
6. IT IS IMPORTANT TO PLACE AND COMPACT BACKFILL MATERIAL IN THIS AREA IN ORDER TO GIVE PROPER SUPPORT TO THE PIPE.

## BEDDING AND BACKFILL FOR HDPE, PVC OR CORRUGATED STEEL CULVERT

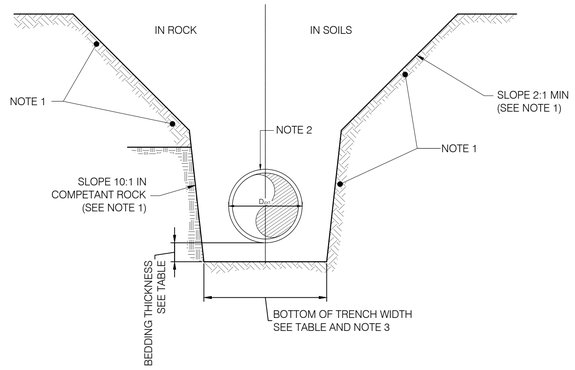


NOTES:

1. EXCAVATION SLOPES ARE NOT RESTRICTED TO SLOPES SHOWN ON DRAWING. THE EXCAVATION MUST MEET THE REQUIREMENTS OF THE "OCCUPATIONAL HEALTH AND SAFETY ACT", NAMELY THE REQUIREMENTS FOR MATERIAL STORAGE, CIRCULATION OF VEHICLES NEAR THE EXCAVATION AND STABILITY OF THE SLOPES.
2. THE PIPE MUST BE CENTERED AT THE BOTTOM OF THE TRENCH. Dext. IS THE OUTSIDE DIAMETER OF THE PIPE, MESURED IN MILLIMETERS.
3. BOTTOM OF TRENCH WIDTH CORRESPONDS TO THE DISTANCE BETWEEN SHORING WALLS, IF EXCAVATION IS SUPPORTED.

| NOMINAL DIAMETER OF THE PIPE mm | MIN. BEDDING THICKNESS (mm) | BOTTOM OF TRENCH WIDTH mm |
|---|---|---|
| 300 AND LESS | 150 | $D_{EXT.}$ + 900 |
| 350 to 600 | 150 | $D_{EXT.}$ + 900 |
| 750 to 1200 | 200 | $D_{EXT.}$ + 1200 |
| 1350 to 1500 | 250 | $D_{EXT.}$ + 1200 |
| 1800 AND MORE | 300 | A) $D_{EXT.}$ + 1200 TRENCH IS SHORED<br>B) $D_{EXT.}$ + 900 TRENCH IS NOT SHORED |

## TRENCH SECTION
N.T.S.

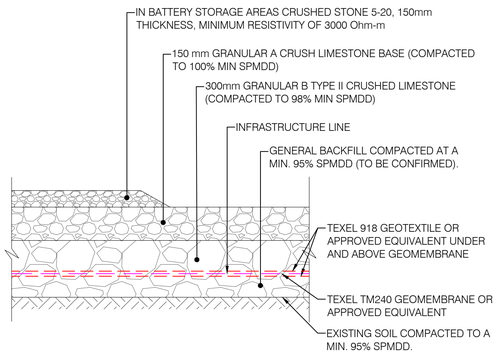


## BATTERY AREA AND PAD STRUCTURE
SCALE: N.T.S.

FOR PERMITTING

| DRAWING No. | DESCRIPTION |
|---|---|
| | |

REFERENCE DRAWINGS

| REV | DESCRIPTION | PREPARED BY | CHECKED BY | DATE |
|---|---|---|---|---|
| AC | FOR PERMITTING | E. AMELI | M. SHAHRAKI | 2025-06-19 |
| AB | FOR COMMENTS | E. AMELI | M. SHAHRAKI | 2025-06-06 |
| AA | FOR COMMENTS | E. AMELI | M. SHAHRAKI | 2025-03-03 |

REVISIONS

SEAL: LICENSED PROFESSIONAL ENGINEER — E. AMELI 100617996 — PROVINCE OF ONTARIO — 2025-06-19

CLIENT: Evolugen by Brookfield Renewable

PROJECT: SOUTH MARCH BESS
2555 AND 2625 MARCHURST ROAD, OTTAWA

TITLE: CIVIL
ROAD AND DRAINAGE DETAILS

| DESIGNED BY: R. WU | DRAFTED BY: S. PARK |
|---|---|
| PREPARED BY: E. AMELI | CHECKED BY: M. SHAHRAKI |
| SCALE: NTS | DATE: 2025-03-03 |

DRAWING No.: 7154023-100000-41-D50-0002 | SHEET: 01 | SIZE: A1 | REV. AC

BY:JAMES, DONNA
PRINTED:2025-06-19 4:02:17 PM