Stormwater Management Report and Servicing Brief

6310 Hazeldean Road, Ottawa, ON

Prepared for:

9441-6302 Quebec Inc

Attention: Felix Allaire

Rev. January 26, 2026
August 18, 2025

LRL File No.: 220027

5430 Canotek Road | Ottawa, ON, K1J 9G2 | info@lrl.ca | www.lrl.ca | (613) 842-3434

TABLE OF CONTENTS

1 INTRODUCTION AND SITE DESCRIPTION 1
2 EXISTING SITE AND AVAILABLE SERVICES 1
3 PROPOSED DEVELOPMENT 2
4 SCOPE OF WORK 2
5 REGULATORY APPROVALS 3
6 WATER SUPPLY SERVICING DESIGN 3
6.1 Residential Water Demands 4
6.2 Commercial Water Demands 4
6.3 Total Water Demands 5
6.4 Fire Flow Demands 5
6.5 Boundary Conditions 6
6.6 Water Distribution Network Hydraulic Modelling 7
7 SANITARY SERVICE 7
8 STORMWATER MANAGEMENT 8
8.1 Existing Stormwater Infrastructure 8
8.2 Design Criteria 8
8.3 Proposed Stormwater Management System 8
9 EROSION & SEDIMENT CONTROL 10
10 CONCLUSION 11
11 REPORT CONDITIONS AND LIMITATIONS 12

APPENDICES

Appendix A **Site Topographical Survey**
As-built drawings

Appendix B **Site Plan and Architectural Floor Plans**

Appendix C **Pre-Con Meeting Notes**

Appendix D **Water Demand Calculations**
Boundary Conditions
Fire Hydrant Coverage

Appendix E **Civil Engineering Drawings**

Appendix F **Sanitary Calculations**

Appendix G **Stormwater Management Design Calculations**

LIST OF TABLES

Table 1: City of Ottawa Design Guidelines- Water Design Parameters 3
Table 2: Residential Population Estimate 4
Table 3: Fire Protection Summary Table 6
Table 4: Summary of Boundary Conditions 6
Table 5: Post-development Catchment Areas and Runoff Coefficients 9
Table 6: Summary of 100 Year Release Rates and Storage Requirements 10

LIST OF FIGURES

Figure 1: Aerial View of Subject Site 1

1 INTRODUCTION AND SITE DESCRIPTION

LRL Associates was retained by Scalia to prepare a Stormwater Management Report and Serviceability Brief to support Site Plan Control application for the proposed development located at 6310 Hazeldean Road, Ottawa, ON.

The subject site is within the Stittsville Ward, located on the east side of Hazeldean Road, and has an approximate area of **1.20 ha**. Under the City of Ottawa Zoning by-law, the property is currently zoned as AM [2102]. The land is currently vacant, consisting mainly of a large mixed paved and gravel area as well as some landscaping area. The aerial view of subject site is shown below in Figure 1.

=

Figure 1: Aerial View of Subject Site

2 EXISTING SITE AND AVAILABLE SERVICES

The site is currently primarily covered with gravel and some natural landscaping. Based on the topography and site survey information, there is an easement along the east property line which includes a ditch collecting and conveying storm water from the northeast corner of the site to the southeast corner. The existing site topographical survey can be found in **Appendix A**. Sewer and watermain mapping, along with as-built information collected from the City of Ottawa (see **Appendix A**) indicate the following existing infrastructure located within the adjacent rights-of-way:

Hazeldean Road:

- 375 mmØ PVC Sanitary Sewer
- 406 mmØ PVC Watermain

Easement at Parcel West of Site:

- 450 mmØ PVC Sanitary Sewer
- 305 mmØ PVC Watermain

No municipal storm sewers are located in close proximity of the subject site; however, a roadside ditch is present along Hazeldean Road and within an easement on the east side of the site. There are currently no stormwater management measures noted on site. Stormwater runoff flows off the site in an uncontrolled manner towards Hazeldean Road rights-of-way and into the existing ditch.

3 PROPOSED DEVELOPMENT

The proposed development will consist of two multi-storey buildings, identified as Building A and Building B, both of which will be accessible from Hazeldean Road. The development will accommodate a total of 457 residential units, comprising 248 units in Building A and 209 units in Building B. Parking will be provided on two underground levels and two above-ground levels. In addition, bicycle parking spaces will also be available.

Outdoor amenity spaces and green spaces will be located on the third level of Building A. For additional detail of the proposed development, refer to the Site Plan prepared by ACDF in **Appendix B**.

4 SCOPE OF WORK

As per applicable guidelines, the scope of work includes the following:

Stormwater management

- Calculate the allowable stormwater release rate.
- Calculate the anticipated post-development stormwater release rates.
- Demonstrate how the target quantity and quality control objectives will be achieved.

Water services

- Calculate the expected water supply demand at average and peak conditions.
- Calculate the required fire flow as per the Fire Underwriters Survey (FUS) method.
- Confirm the adequacy of water supply and pressure during peak flow and fire flow.
- Describe the proposed water distribution network and connection to the existing system.

Sanitary services

- Describe the existing sanitary sewers available to receive wastewater from the proposed buildings.
- Calculate peak flow rates from the proposed development.
- Describe the proposed sanitary sewer system.

5 REGULATORY APPROVALS

As noted in the pre-consultation meeting notes (**Appendix C**), it is anticipated that an MECP Environmental Compliance Approval (ECA) will be required for the subject site. The Mississippi Valley Conservation Authority (MVCA) will also need to be consulted to obtain municipal approval for site development. No other approval requirements from other regulatory agencies are anticipated.

6 WATER SUPPLY SERVICING DESIGN

The subject property lies within the City of Ottawa 3W water distribution network pressure zone. There is an existing 406 mmØ watermain within Hazeldean Road.

According to the City of Ottawa Water Distribution Guidelines (Technical Bulletin ISTB-2021-03), since the subject site is anticipated to house more than 50 residential units, it is required to be serviced by two water service laterals, separated by an isolation valve, for redundancy and to avoid creation of a vulnerable service area. Hence, the proposed development is proposed to be serviced via two (2) 200 mmØ water services connected to the existing 406 mmØ watermain within Hazeldean Road. For the layout of proposed water servicing network, refer to the Servicing Plan C401 included in **Appendix E**.

Table 1, shown below, summarizes the City of Ottawa Design Guidelines parameters used in the preparation of the water demand estimate and servicing design.

Table 1: City of Ottawa Design Guidelines- Water Design Parameters

Design Parameters	Value
Residential Bachelor / 1 Bedroom Apartment	1.4 P/unit
Residential 2 Bedroom Apartment	2.1 P/unit
Residential 3 Bedroom Apartment	3.1 P/unit
Commercial Average Daily Demand	2.8 L/m^2/d
Average Daily Demand	280 L/c/d
Minimum Depth of Cover	2.4 m from top of watermain to finished grade
Desired operating pressure range during maximum day operating conditions	345 kPa (50 psi) and 552 kPa (80 psi)
During peak hour operating conditions pressure must not drop below	275 kPa (40 psi)
During normal operating conditions pressure shall not exceed	552 kPa (80 psi)
During fire flow operating conditions pressure must not drop below	140 kPa (20 psi)

6.1 Residential Water Demands

Anticipated population demands have been calculated based on the architectural Site Plan drawing completed by ACDF Architecture. The proposed development is anticipated to include a total of **457** residential units (248 units in Building 1 and 209 units in Building 2) which translates to a population of approximately **819** people as per the City of Ottawa Water Distribution Design Guidelines. Table 2 below summarizes the proposed population count, based on the criteria outlined in Table 4.1 of the Guidelines.

Table 2: Residential Population Estimate

Unit Type	Persons Per Unit	Number of Units		Population
		Building 1	Building 2	
Studio	1.4	33	12	63
1 Bedroom Apartment	1.4	142	63	287
2 Bedroom Apartment	2.1	67	106	363.3
3 Bedroom Apartment	3.1	6	28	105.4
	Total	**248**	**209**	**818.7**

The required water supply for the residential units in the proposed development has been calculated using the following formula:

Where:

$$Q = (q \times P \times M)$$

q = average water consumption (L/capita/day)
P = design population (capita)
M = peak factor
With reference to *Table 4.2 of the City of Ottawa Water Distribution Design Guidelines*, using an average water consumption rate of 280 L/c/d, a Maximum Daily Demand Factor and Maximum Hour Demand Factor of 2.5 and 2.2, respectively, anticipated demands were calculated as follows:

- Average daily demand is **2.65 L/s**,
- Maximum daily demand is **6.63 L/s**, and
- Maximum hourly demand is **14.59 L/s**.

6.2 Commercial Water Demands

The water supply requirements for the commercial space within the proposed development have been calculated using the following formula:

Where:

$$Q = (q \times A \times M)$$

q = average water consumption (L/ha/day)
A = commercial area (ha)
M = peak factor

With reference to Table 4.2 of the *City of Ottawa Water Distribution Design Guidelines*, using an average water consumption rate of 28,000 L/ha/d, a Maximum Daily Demand Factor and Maximum Hour Demand Factor of 1.5 and 1.8, respectively, anticipated commercial demands were calculated as follows:

- Average daily demand is **0.347 L/s**,
- Maximum daily demand is **0.520 L/s**, and
- Maximum hourly demand is **0.936 L/s**.

6.3 Total Water Demands

Based on calculated residential and commercial demands for the proposed development, the total anticipated water demands are as follows:

- Average daily demand is **3.00 L/s**,
- Maximum daily demand is **7.15 L/s**, and
- Maximum hourly demand is **15.53 L/s**.

For greater detail on Water Demand Calculations, refer to **Appendix D**.

6.4 Fire Flow Demands

The estimated fire flow for the proposed buildings was calculated in accordance with ISTB-2018-02. The following parameters were provided by the Architect:

- Type of construction: Non-combustible Construction
- Occupancy type: Limited Combustibility
- Sprinkler Protection: Automatic & Fully Supervised Sprinkler System

The Fire Underwriters Survey 2020 was used to calculate the fire flow demand for the site. The total effective area considers the two largest adjoining floor areas plus 50% of all floors immediately above them up to a maximum of eight. Buildings A and B although sharing the same parking garage were considered as two separate buildings since the parking garage is separated from the buildings by a fire separation.

The total effective area was calculated for each building, and to be conservative, the building with the larger total effective area was used for boundary condition request. This was Building A, located on the west side of the site. It had a total effective floor area of **17,520 m^2**. Building B was considered in the calculations through consideration of exposure distance. The maximum estimated fire flow demand was calculated to be **13,000 L/min** for Building A, see **Appendix D** for details.

There are at least three (3) existing fire hydrants near the contemplated buildings that are available to provide the maximum required fire flow demands of **13,000 L/min**. Refer to ***Appendix D*** for the water pressure zone and location of fire hydrants.

Table 3 below summarizes the aggregate fire flow of the contributing hydrants near the proposed development based on Table 18.5.4.3 of *ISTB-2018-02*.

Table 3: Fire Protection Summary Table

	Max. Fire Flow Demand (L/min)	Fire Hydrants(s) within 75m	Fire Hydrant(s) within 150m	Available Combined Fire Flow (L/min)
Proposed Development	13,000	2	1	(2 x 5678) + (1 x 3785) = 15,141

The total available fire flow from contributing hydrants is equal to **15,141 L/min** which is sufficient to provide adequate fire flow for the proposed development. A certified fire protection system specialist will need to be employed to design the building's fire suppression system and confirm the actual fire flow demand.

6.5 Boundary Conditions

The City of Ottawa was contacted to obtain boundary conditions associated with the estimated water demand, as indicated in the boundary request correspondence included in ***Appendix D***. Table 4 below summarizes the boundary conditions for the proposed development.

Table 4: Summary of Boundary Conditions

Scenario	Connection 1@Hazeldean Rd		Connection 2@Hazeldean Rd	
	Head (m)	*Pressure (psi)	Head (m)	*Pressure (psi)
Maximum HGL	160.6	51.0	160.6	51.0
Peak Hour	157.0	46.0	157.0	46.0
Max Day plus Fire Flow #1	156.7	45.5	156.6	45.4

**Assumed Ground Elevation = 124.7m*

As shown in Table 4, the pressures in all scenarios satisfy the required pressure ranges stated in the *City of Ottawa Design Guidelines-Water Distribution* (see Table 1). It is important to note that due to the change in the number of units (and consequently the calculated population), the water demands have increased since the initial boundary conditions request as follows:

- Average Day Demand: increased by 12.8%
- Maximum Day Demand: increased by 8.5%
- Peak Hour Demand: increased by 7.4%

It is our opinion that these modest increase in water demand are not expected to have a significant impact on the boundary conditions provided or the resulting residual pressure calculations.

6.6 Water Distribution Network Hydraulic Modelling

To ensure the adequacy of the proposed water distribution network, a supplementary hydraulic analysis was carried out using EPANET (Version 2.2). The top of water servicing pipe was assumed to be 2.4m below grade. Three scenarios were analyzed, as described below,

- Scenario 1: The anticipated average day demand was applied to the service entry nodes J1 and J2 of the proposed development. The resulting residual pressures within the network ranged from **54.01 to 57.70 psi**.
- Scenario 2: The anticipated peak hour demand was applied to nodes J1 and J2. The resulting residual pressures ranged from **48.86-52.56 psi**, thus exceeding the required minimum pressure of **40 psi**.
- Scenario 3: The anticipated maximum day demand was applied to nodes J1 and J2, the residual pressure within the water servicing network ranged from **48.32-52.16 psi**, thereby exceeding the required minimum pressure of **20 psi**. For this analysis, the boundary condition corresponding to the maximum day demand plus fire flow was applied at the proposed connection point.

For detailed modeling results including residual pressure, flow and velocities, refer to **Appendix D**.

7 SANITARY SERVICE

There is an existing municipal sanitary sewer within an easement located at the neighboring property parallel to the western property line of the subject site. As per pre-consultation with City staff, it is proposed that the proposed development will connect to the existing 450 mm dia. sanitary sewer within the neighboring easement. For this connection, an easement agreement with the neighbouring property is expected to be required.

A single 375 mm dia. sanitary service lateral is proposed to service all buildings within the proposed development through the underground parking garage. The sanitary flow will discharge to the proposed maintenance hole SAN MH01 and subsequently to SAN MH02, located near the southwest corner of the site. From SAN MH02, it will connect to the existing SAN sewer located southwest within the easement.

The estimated post-development total sanitary flow is calculated **9.92 L/s** accounting for the proposed residential population, commercial uses and infiltration allowances. The design parameters included: an average daily flow of 280 L/person/day, a commercial flow of 28,000 L/ha/day, an extraneous flow allowance of 0.33 L/s/ha, a residential peaking factor of 3.4, a commercial peaking factor of 1.5 and a total residential population of 819. Details of the sanitary flow calculations are provided in **Appendix F.**

Based on as-built drawings, the existing 450 mm dia. sanitary sewer located southwest of property has a slope of 0.18% and a maximum capacity of **120.96 L/s**. The anticipated peak wastewater

flow from the proposed development represents approximately **8.20%** of the existing sewer's maximum capacity. The City of Ottawa was contacted to confirm the available capacity of the existing sanitary sewer. The City has confirmed that there are no capacity concerns. Refer to the correspondence included in **Appendix D.**

8 STORMWATER MANAGEMENT

8.1 Existing Stormwater Infrastructure

The subject property lies within the Poole Creek Sub-Watershed and is within the Carp River Watershed Plan. There is a ditch located north of the site and a ditch located east of the site within a 10 m-wide easement. There are no municipal storm sewers within the Hazeldean road right-of-way.

In pre-development conditions, the site is relatively flat and primarily covered with gravel, with some grassed areas along the boundaries. Stormwater runoff from the subject site generally flows uncontrolled overland to the north of the site towards Hazeldean roadside ditch and to the east side towards the existing ditch running parallel to the site's east property line. Refer to **Appendix A** for topographical survey showing existing elevations and ditches.

8.2 Design Criteria

The stormwater management criteria for this development is based on pre-consultation with City of Ottawa officials, the City of Ottawa Sewer Design Guidelines, 2012 (City standards), as well as the Ministry of the Environment's Stormwater Management Planning and Design Manual, 2003 (SWMPD Manual).

The stormwater management will need to meet the following design criteria.

- Meet an allowable release rate based on the pre-development Rational Method coefficient or a maximum of 0.50, employing the City of Ottawa IDF parameters for a 5-year storm with a calculated time of concentration equal to or greater than 10 minutes; and
- Attenuate all storms up to and including the City of Ottawa 100-year storm event on site.
- Based on coordination with the MVCA, enhanced quality treatment (80% TSS removal) prior to release from site will be required.

8.3 Proposed Stormwater Management System

Based on pre-consultation with the City of Ottawa, the preferred outlet location of the site will be to the ditch that crosses the site at the eastern limit. This ditch is located within a 10m wide existing drainage easement OC626261. The conditions set out in the easement must be respected.

The proposed area drains on the parking lot along with roof drains on building rooftops will be utilised to collect and direct runoff to the building's mechanical system, and eventually to the retention gallery located south within the landscape area. Storm service lateral outlets will be provided on the east side of the retention gallery to discharge controlled runoff from the storage system to the existing ditch.

Based on stormwater management criteria, the allowable release rate for the proposed development is calculated **159.93 L/s** for all storms up to and including the 100-year storms. To

meet the quantity control objectives, the proposed development will utilize surface/subsurface storage within the landscape area. Table 5 below summarizes post-development drainage areas and runoff coefficients. Detailed calculations can be found in ***Appendix G.***

Table 5: Post-development Catchment Areas and Runoff Coefficients

Catchment	Total Area (ha)	Combined C
CA-01 (controlled)	0.497	0.90
CA-02A (controlled)	0.005	0.68
CA-02B (controlled)	0.005	0.66
CA-02C (controlled)	0.004	0.72
CA-02D (controlled)	0.009	0.53
CA-02E (controlled)	0.008	0.52
CA-02F (controlled)	0.009	0.52
CA-02G (controlled)	0.009	0.47
CA-03 (controlled)	0.165	0.84
CA-04 (controlled)	0.011	0.62
CA-05 (controlled)	0.047	0.81
CA-06 (controlled)	0.072	0.88
CA-07 (controlled)	0.035	0.90
CA-08 (controlled)	0.032	0.86
CA-09 (controlled)	0.021	0.84
CA-10 (controlled)	0.017	0.68
CA-11 (controlled)	0.088	0.35
CA-12 (uncontrolled)	0.054	0.20
CA-13 (uncontrolled)	0.017	0.90
Total	**1.104**	**0.79**

Table 6, below, summarizes post-development flow rates and required storage. Most of the roofs and asphalt parking area between buildings 1 and 2 will be controlled. The landscaped areas along the north and west property lines, and majority of landscape area to the south will be controlled. However, some landscaped area to the south and a small portion of the landscaped area at the northwest corner of the site, will remain uncontrolled.

Table 6: Summary of 100 Year Release Rates and Storage Requirements

Catchment	Drainage Area (ha)	100 Year Release Rate (L/s)	100 Year Required Storage(m^3)	Available Total Storage (m^3)
CA-01 to CA-11 (ICD controlled)	1.034	143.98	347.07	351.00
CA-12 to CA-1 (uncontrolled)	0.071	15.95	N/A	N/A
Total	**1.104**	**159.93**	**347.07**	**351.00**

Stormwater management calculation shows, during 100-year storm, a total of **347.07 m^3** of storage is required to attenuate the controlled flow to **143.98 L/s.** Refer to ***Appendix G*** for storage calculation details. The proposed stormwater storage unit will be installed within the landscape area, which will provide a total storage of **351.00 m^3.** Refer to Stormwater Management Plan C601 for the location of proposed storage systems.

The proposed development will utilize an Oil/Grit Separator (OGS) to achieve the required 80% TSS removal treatment, as specified by MVCA. The OGS will provide treatment for contaminated runoff from the surface parking lot prior to discharge into the retention gallery. The unit will be installed upstream of the retention gallery within building envelope to treat runoff collected from catchment areas CA-05 through CA-10. Runoff from roof areas (CA-01 & CA-03), and landscaped areas (CA-02) is considered relatively clean and therefore does not require OGS treatment. Refer to the mechanical drawings for the location of the proposed OGS.

9 EROSION & SEDIMENT CONTROL

During construction, best management practices (BMPs) shall be undertaken to Control Erosion and Sediment. These BMPs aim to minimize soil erosion, sedimentation, and other negative impacts on water quality and natural habitats. Some examples of BMPs for erosion and sediment control are:

- Controlling mud tracking by installing, maintaining, and using stabilized construction entrances and exits at all access locations. Mud mat shall be maintained and cleaned on a regular basis.
- Installing inlet sediment control devices to prevent surface erosion from entering any storm sewer system during construction; filter bags shall be placed under grates of nearby catch basins and structures.
- Establishing vegetation such as grasses and trees, can help stabilize soil and prevent erosion. In areas where vegetation is not present, consider planting native species that are well adapted to the local soil and climate conditions.

- Installing silt fences to trap sediment and prevent it from entering nearby waterways, to be erected along the perimeter of the site where runoff has the potential of leaving the site.
- Manage construction activities: Proper management of construction activities is essential to minimize soil disturbance and sedimentation. This may include controlling runoff from disturbed areas, using proper excavation techniques, and minimizing the amount of time that soil is exposed.
- Implement good housekeeping practices: This includes properly managing and disposing of waste materials, regularly maintaining equipment to prevent leaks and spills, and keeping work areas clean and free of debris. It is important to note that the specific BMPs used for erosion and sediment control may vary depending on the site conditions and project requirements. Therefore, it is important to ensure that the appropriate BMPs are selected and implemented for this site.
- A Light Duty Straw Bail Barrier is to be installed downstream of the development's storm outlet within the Ditch as per OPSD 219.100.

10 CONCLUSION

This Stormwater Management and Servicing Report for the development proposed at 6310 Hazeldean Road presents the rationale and details for the servicing requirements for the subject property. In accordance with the report objectives, the servicing requirements for the development are summarized below:

Water Service

- The contemplated development is proposed to be serviced via a **200 mmØ** dual connections to the existing 406 mm diameter watermain within Hazeldean Road.
- The calculated total water demands are: **3.00 L/s** (average day demand), **7.15 L/s** (maximum daily demand), and **15.53 L/s** (maximum hourly demand).
- The maximum required fire flow was calculated at **13,000 L/min** using the FUS 2020 method.
- There are at least three (3) existing fire hydrants available to service the proposed development. They will provide a combined fire flow of **15,141 L/min** to the site.
- The hydraulic analysis confirms that adequate pressure is available to service the proposed development.

Sanitary Service

- The post-development total sanitary flow was calculated to be **9.92 L/s**, accounting for the proposed residential populations, commercial areas as well as extraneous flow allowance.
- The proposed development will be serviced via a **375 mmØ** sanitary sewer to be connected to the existing 450 mmØ sanitary sewer located within the neighbouring easement southwest of the site.

Stormwater Management

- The post-development stormwater runoff will be controlled to the pre-development 5-year release rate of **159.93 L/s**.
- The required storage will be accommodated within the retention gallery located south end of the site, which will provide a total storage of **351.00 m^3**.
- An OGS (Stormceptor EFO4 or approved equivalent) will be installed upstream of the storage system to treat runoff generated from the parking/circulation area. The proposed OGS unit will provide enhanced level of treatment (i.e. 80% TSS removal).
- The subject site will outlet to the ditch within the easement located east end of the subject site.

11 REPORT CONDITIONS AND LIMITATIONS

The report conclusions are applicable only to this specific project described in the preceding pages. Any changes, modifications or additions will require a subsequent review by LRL Associates Ltd. to ensure compatibility with the recommendations contained in this document.

If you have any questions or comments, please contact the undersigned.

Prepared by:

LRL Associates Ltd.

Maxime Longtin
Civil Engineering Technologist

Mohan Basnet, P.Eng.
Civil Engineer

APPENDIX A

As-Built, Topographical Survey

PLAN OF TOPOGRAPHIC SURVEY

OF PART OF

LOT 22

CONCESSION 12

GEOGRAPHIC TOWNSHIP

OF GOULBOURN

CITY OF OTTAWA

McINTOSH PERRY SURVEYING INC

SCALE 1 : 300

0 5 10 15 20 25 30 Metres

METRIC :

DISTANCES AND COORDINATES SHOWN ON THIS PLAN ARE IN METRES AND CAN BE CONVERTED TO FEET BY DIVIDING BY 0.3048.

SURVEYOR'S CERTIFICATE

I CERTIFY THAT THIS SURVEY WAS COMPLETED ON APRIL 18, 2018.

DATE

BRIAN W. KERR
ONTARIO LAND SURVEYOR

LEGEND AND NOTES

□	DENOTES	MONUMENT PLANTED
■	DENOTES	MONUMENT FOUND
IB	DENOTES	IRON BAR
SIB	DENOTES	STANDARD IRON BAR
SSIB	DENOTES	SHORT STANDARD IRON BAR
RPL	DENOTES	ROCK PLUG
RIB	DENOTES	ROUND IRON BAR
(m)	DENOTES	MEASURED
(p)	DENOTES	PLAN 4R-23111
(p2)	DENOTES	PLAN 4R-19395
(647)	DENOTES	H.R. FARLEY, OLS
(857)	DENOTES	FAIRHALL, MOFFATT & WOODLAND LIMITED
(OU)	DENOTES	ORIGIN UNKNOWN
N	DENOTES	NORTH
S	DENOTES	SOUTH
W	DENOTES	WEST
ORP	DENOTES	OBSERVED REFERENCE POINT
INV.	DENOTES	INVERT
OBV.	DENOTES	OBVERT
AN	DENOTES	ANCHOR
HP	DENOTES	HYDRO POLE
FH	DENOTES	FIRE HYDRANT
WV	DENOTES	WATER VALVE
MH	DENOTES	MANHOLE
CSP	DENOTES	CORRUGATED STEEL PIPE
ELEV.	DENOTES	ELEVATION
CONC.	DENOTES	CONCRETE
BM	DENOTES	BENCHMARK
LS	DENOTES	LIGHT STANDARD
COM BOX	DENOTES	COMMUNICATION BOX
TS	DENOTES	TRAFFIC SIGNAL
HH	DENOTES	HAND HOLE
MH-TR	DENOTES	TRAFFIC MANHOLE
MH-SAN	DENOTES	SANITARY MANHOLE
T/G	DENOTES	TOP OF GRATE
CULV.	DENOTES	CULVERT
BPED	DENOTES	BELL PEDESTAL
DS	DENOTES	DOOR SILL
CB	DENOTES	CATCH BASIN

ELEVATIONS ARE CANADA GEODETIC VERTICAL DATUM 1928:1978 DERIVED FROM REAL TIME NETWORK GPS OBSERVATIONS WITH GEOID CORRECTION APPLIED.

SITE BENCHMARK 'A' – TOP OF SPINDLE OF FIRE HYDRANT, HAVING AN ELEVATION OF 124.68m.

SITE BENCHMARK 'B' – TOP OF SPINDLE OF FIRE HYDRANT, HAVING AN ELEVATION OF 125.26m.

SITE BENCHMARK 'C' – TOP OF SPINDLE OF FIRE HYDRANT, HAVING AN ELEVATION OF 125.50m.

DISTANCES SHOWN ON THIS PLAN ARE GROUND DISTANCES AND CAN BE CONVERTED TO GRID DISTANCES BY MULTIPLYING BY A COMBINED SCALE FACTOR OF 0.999909.

BEARINGS SHOWN ON THIS PLAN ARE MTM GRID BEARINGS, DERIVED FROM OBSERVED REFERENCE POINTS A AND B, SHOWN HEREON, BY REAL TIME NETWORK (RTN) OBSERVATIONS, AND ARE REFERRED TO THE CENTRAL MERIDIAN OF MTM ZONE 9, (76° 30' WEST LONGITUDE) NAD83 (CSRS) (ORIGINAL)

OBSERVED REFERENCE POINTS (ORP's) DERIVED FROM GPS OBSERVATIONS USING REAL TIME NETWORK (RTN) SERVICE.
MTM ZONE 9, NAD83 (CSRS) (ORIGINAL)

COORDINATES TO URBAN ACCURACY PER SEC. 14 (2) OF O.REG. 216/10

POINT ID	NORTHING	EASTING
ORP 'A'	5014096.15	348658.90
ORP 'B'	5014120.95	348773.66

COORDINATES CANNOT, IN THEMSELVES, BE USED TO RE-ESTABLISH CORNERS OR BOUNDARIES SHOWN ON THIS PLAN

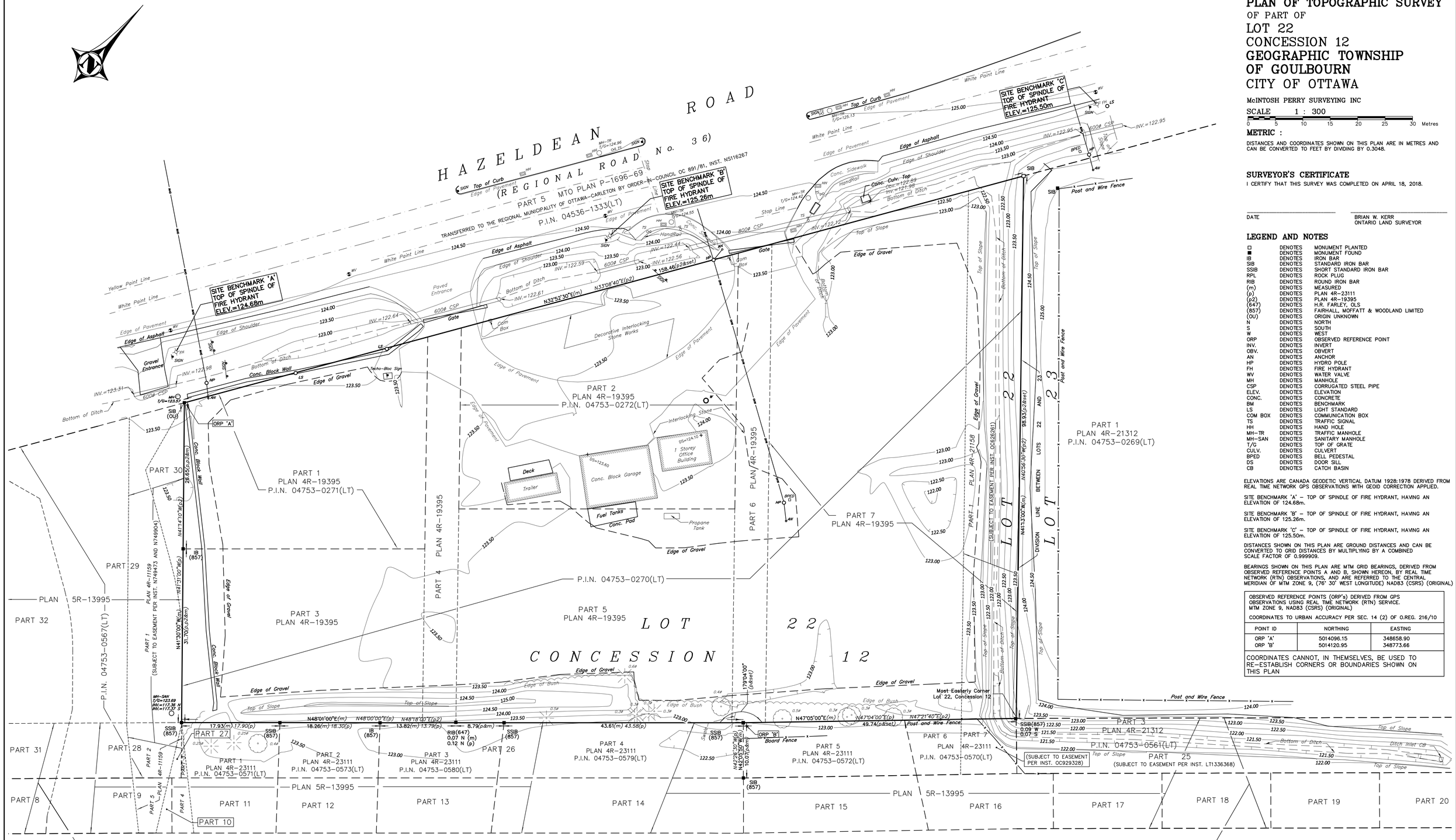

JOB No. 18-4039	DRAWING: D18-4039
THIS PLAN WAS PREPARED FOR: MPCE (Curtis Melanson)	

McINTOSH PERRY
SURVEYING INC.
3240 Drummond Con. 5A, R.R. #7, Perth, ON K7H 3C9
Tel: 613-267-6524 Fax: 613-267-7992
www.mcintoshperry.com

EXAMINED: CHECK:

M:\SURVEY-DATA\S2018\18-4039 MPCE (6310 HAZELDEAN ROAD)\D18-4039.DWG

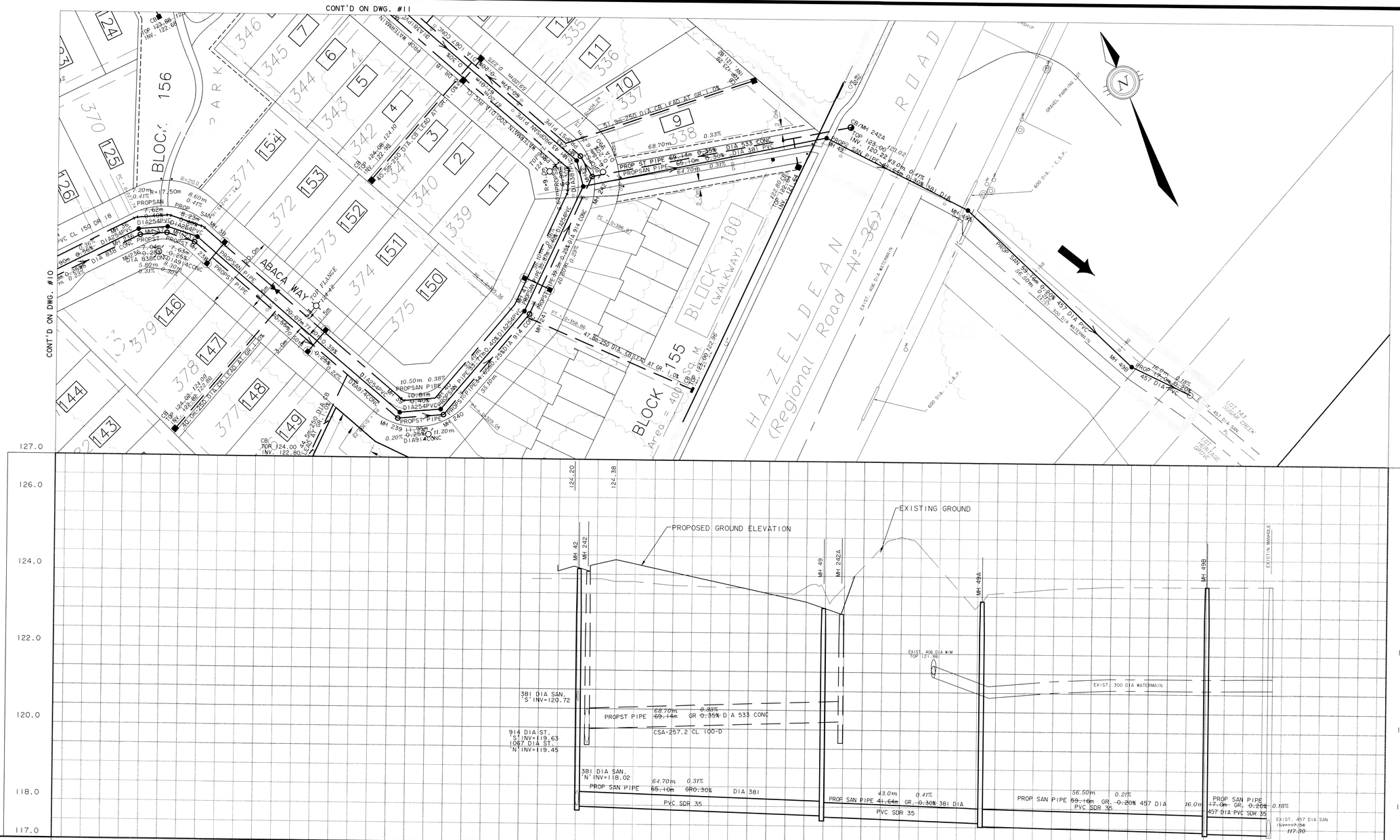

RECORD DRAWING

DATE: *01/05/02*

NO.	REVISIONS	DATE	BY	APP'D
3	RECORD DRAWING	01/05/02	ABZ	AA
2	REVISED AS PER CITY COMMENTS NOV21/01 & LOT REVISIONS ON ABACA WAY	30/11/01	GBU	SJC
1	REVISED AS PER CITY COMMENTS OCT22/01 & LOT REVISIONS ON ABACA WAY	12/11/01	GBU	SJC

LICENSED PROFESSIONAL ENGINEER M.A. ANSARI 22/10/08 PROVINCE OF ONTARIO

REVIEWED

DESIGN S.J.C.
DRAWN G.B.U.
CHECKED M.J.C.

CLIENT: CBA RIDEAU (STITTSVILLE) LTD.

PROJECT: TIMBERMERE - PHASE 2 & 3

TITLE: SANITARY EASEMENT

OMM A TROW COMPANY — CONSULTING ENGINEERS, HYDROGEOLOGISTS & PLANNERS, 154 COLONNADE RD. SOUTH, NEPEAN ONT. — Trow

DATE: SEPTEMBER 2001 | SCALE: HORIZ 1:500, VERT 1:50 | DRAWING NO. MP14886A | 13 | REV. 2

APPENDIX B

Site Plan

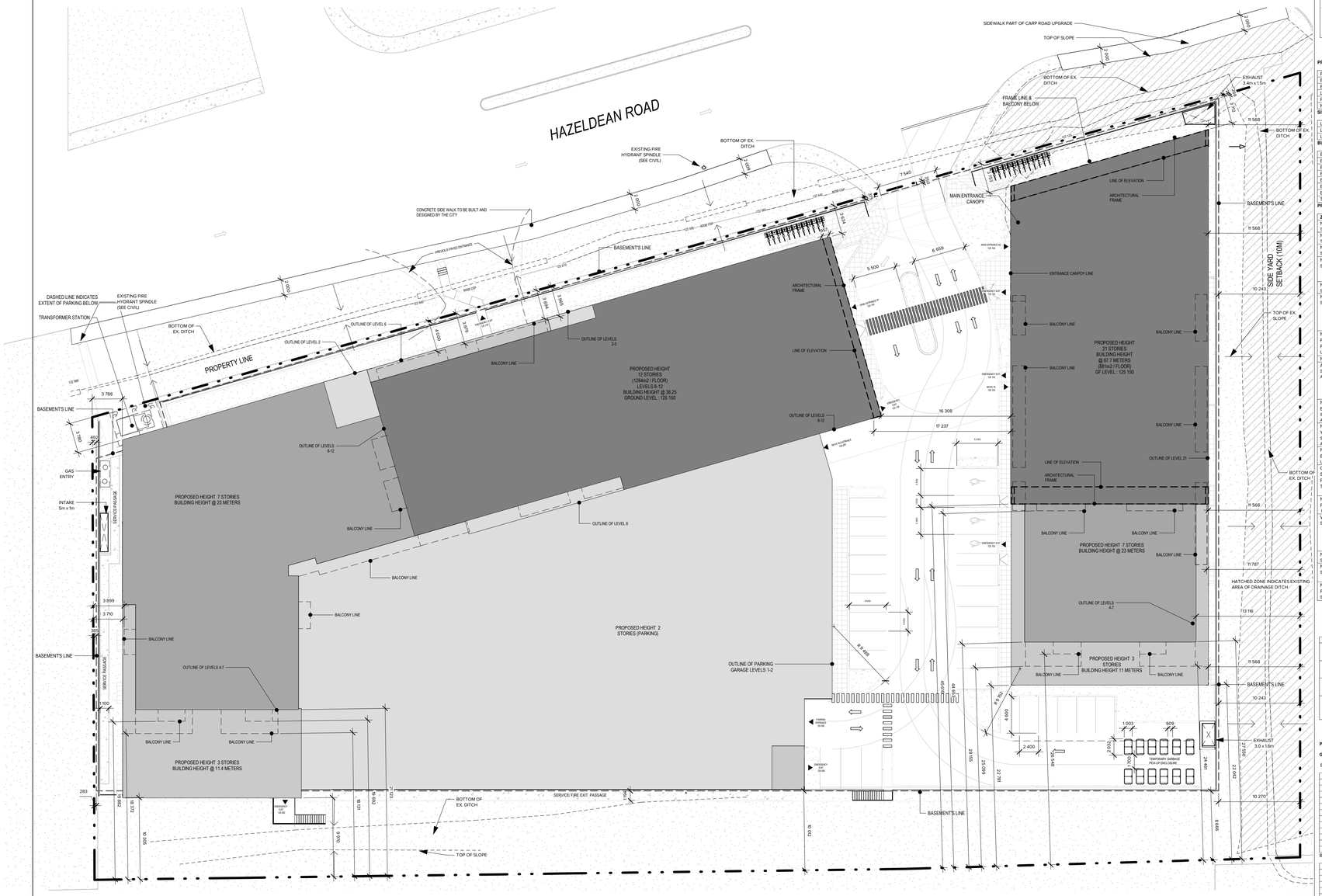

1 A-025 SITE PLAN - SPA
ÉCHELLE: 1 : 300

CLIENT
FELIX ALLAIRE
4329163 CANADA INC.
6310 HAZELDEAN ROAD
P.O.BOX 1791
STITTSVILLE, ON K2S 1B4

CONSULTANTS

PLANNER
PATRICIA WARREN
FOTENN PLANNING
420 O'CONNOR STREET, OTTAWA, ON K2P 1W4

ARCHITECT
MAXIME FRAPPIER
ACDF ARCHITECTURE
201, 6250 RUE HUTCHISON, MONTREAL, QUEBEC H2V 4C3

CIVIL ENGINEER
MAXIME LONGTIN
5430 CANOTEK RD, OTTAWA, ON
SURVEYOR

PROJECT DESCRIPTION:

PROPOSED DESIGN	2 RESIDENTIAL BUILDING
BUILDING 01	12 STORY
BUILDING 02	21 STORY
LOCAL AUTHORITY	CITTY OF OTTAWA
PIN NUMBER	04753-0270, 0271, 0272
MUNICIPAL ADDRESS	6310 HAZELDEAN ROAD

SITE INFORMATION:

LOT AREA	12,014m^2
LOT FRONTAGE	152m
LOT DEPTH	79.5m

BUILDINGS INFORMATION:

BUILDING AREA 01	5,030m^2
BUILDING AREA 02	1,325m^2
BUILDING FLOOR AREA (ABOVE GRADE)	
BUILDING 01 PROPOSED USE:	HIGH-RISE DWELLING UNITS
BUILDING 02 PROPOSED USE:	HIGH-RISE DEWLLING UNITS
BUILDING 01 NUMBER OF UNITS	248
BUILDING 02 NUMBER OF UNITS	209
TOTAL NUMBER OF UNITS	457

PROJECT ZONING BY-LAW AND APPLICABLE BUILDING CODE:

ZONING TABLE	AMI[2102] 5501 Provisions	PROPOSED
MINIMUM LOT AREA Table 185	No minimum	12,014m^2
MINIMUM LOT WIDTH Table 185	No minimum	154m
MINIMUM FRONT YARD SETBACK Schedule 501	3 m	Building 01: 0.3 m Building 02: 0.3 m
MINIMUM INTERIOR SIDE YARD Schedule 501	EAST: 10 m WEST: 3 m	Building 01(East): N/A Building 01(West): 0.2 m Building 02 (East): 10.2 m Building 02 (West): N/A
MINIMUM REAR YARD Schedule 501	10 m	8.2 m
MINIMUM BUILDING HEIGHT Schedule 501	Area A: 41 m Area B: 67.7 m Area C: 24 m Area D: 11 m Area E: 0 m Area F: 0 m	Area A: 38.25 m Area B: 65.15 m Area C: 23 m Area D: 11.4 m Area E: 0 m Area F: 1.8 m
MINIMUM SETBACK ABOVE 4TH FLOOR FOR ANY PORTION OF A BUILDING 10 FLOOR OR MORE Urban Exception 2102	1.5 m	Building 1: 1.5 m Above the 8TH floor for a portion of building, no set back for remainder Building 2: 0 m (no setback is proposed)
MAXIMUM FLOOR SPACE INDEX AMENITY AREA Section 137 Apartment Building Mid-High Rise	N/A Total 6 m^2 / Dwelling unite (2,736 m^3) Communal: 50% of the required total amenity area (1,368 m^2)	N/A Building 01 Private Amenities: 1191.51m^2 Building 02 Private: 2415.29 m^2 Total Privat Amenities: 3606 m^2 Internal Communal Amenities: 551 m^3 External Communal Amenities: 2363.3 m^2 Total Communal Amenities: 2914.3 m^2
MINIMUM LOT AREA FOR HIGH-RISE BUILDINGS Section 77 Area B on Schedule 402	1800 m^2	12014 m^2
MINIMUM INTERIOR SIDE AND REAR YARD SETBACK Section 77 Area B on Schedule 402	11.5 m	11.5 m
MINIMUM SEPRATION DISTANCE BETWEEN TOWERS ON THE SAME LOT Urban Exception 2102	19 m	17 m
ORNAMENTAL ELEMENTS SUCH AS SILLS, BELT COURSES, CORNICES, PARAPETS AND PILASTERS Table 65(3)	0.6 m, but not closer than 0.6 m to a lot line	Building 1: 1 m Building 2: 2.2 m
MINIMUM VEHICLE PARKING SPACE RATE Urban Exception 2102	0.75 spaces/ unit (343 spaces)	368 spaces
VEHICLE PARKING SIZE Section 2102	2.6 m wide x 5.2 long 50% of spaces may be reduced to 2.4 m x 4.6 m for compact cars	360 (2.6 m x 5.2 m), 92 (2.4 m x 4.6 m), 6 (Accessible type A) and 6 (Accessible type B) Total 460
MINIMUM VISITOR PARKING SPACE Section 106	0.2 spaces/ units (91.6spaces)	92 spaces (2.6 m x 5.2m)
MINIMUM AISLE AND DRIVEAWAY SIZE Section 107	Aisle 6 m Driveway (double traffic) min: 6 m Max: 6.7 m	6m
MINIMUM LANDSCAPING PROVISIONS FOR PARKING LOTS Section 110	15% of the area of any parking lot provided as perimeter of interior landscape area	Provided
	1.5 m landscape buffer	Provided
OUTDOOR REFUSE Section 110	Located 3 m (minimum) from a lot line Screened from view by an opaque screen with a height of 2 m	East setback 12.6 m South (Rear) setback 9 m
MINIMUM BICYCLE PARKING SPACE RATE Section 111	1 Space dwelling unit (457 spaces)	457 spaces
LOCATION OF BICYCLE PARKING SPACES Section 111	A maximum of 50% of the required bicycles spaces or 15 spaces which ever is greater may be in a landscape area	24 bicycles spaces for visitors in landscape area
MINIMUM BICYCLE PARKING SPACE PROVISIONS Section 111	Horizontal: 0.6 m x 1.8 m Vertical: 0.5 m x 1.5 m Stacked: 0.37 m x 1.8 m Aisle: 1.5 m	Horizontal: 0.6 m x 1.8 m provided Vertical: 0.5 m x 1.5 m Aisle: 1.5 m provided

PROJECT STATISTICS:

GFA Calculation- (Zoning by Law Part 1- Definitions)

Building 01:

GROUND FLOOR	1058 m^2
2ND FLOOR	1245 m^2
3RD FLOOR	1681 m^2
4TH FLOOR	1916 m^2
5TH FLOOR	1905 m^2
6TH FLOOR	1886 m^2
7TH FLOOR	1881 m^2
8TH FLOOR	1047.40 m^2
9TH FLOOR	1047.40 m^2
10TH FLOOR	1047.40 m^2
11TH FLOOR	1047.40 m^2
12TH FLOOR	1047.40 m^2
TOTAL	16,809 m^2

Building 02:

GROUND FLOOR	721.3 m^2
2ND FLOOR	1129 m^2
3RD FLOOR	1200 m^2
4TH FLOOR	1043 m^2
5TH FLOOR	1047 m^2
6TH FLOOR	1047 m^2
7TH FLOOR	1047 m^2
8TH FLOOR	780 m^2
9TH FLOOR	780 m^2
10TH FLOOR	780 m^2
11TH FLOOR	780 m^2
12TH FLOOR	780 m^2
13TH FLOOR	780 m^2
14TH FLOOR	780 m^2
15TH FLOOR	780 m^2
16TH FLOOR	780 m^2
17TH FLOOR	780 m^2
18TH FLOOR	780 m^2
19TH FLOOR	780 m^2
20TH FLOOR	780 m^2
21ST FLOOR	780 m^2
TOTAL	18154.3 m^2

UNIT MIX:

	STUDIO	1 BEDRROM	2 BEDRROM	3 BEDRROM
BUILDING 01	33	142	67	6
BUILDING 02	12	63	106	28
TOTAL	45	205	173	34

TOTAL: BUILDING 01 248 + BUILDING 02 209= 457

CAR PARKING BREAKDOWN:

REGULAR PARKING 2.6m X 5.2m	268
SMALL PARKING (COMPACT) 2.4m X 4.2m	88
ACCESSIBLE-TYPE A 3.4m X 5.2m	6
ACCESSIBLE-TYPE B 2.5 m X 5.2m	6
VISITORS PARKING 2.6m X 5.2m	92
TOTAL	460

BICYCLE BREAKDOWN:

INTERIOR BICYCLE SPACE	433
EXTERIOR BICYCLE SPACE	24
TOTAL	457

FORMAT: A1

THE CONTRACTOR IS RESPONSIBLE FOR THE VERIFICATION AND COORDINATION OF ALL CONSTRUCTION AND SITE LAYOUT DIMENSIONS. THE CONTRACTOR SHALL NOTIFY THE ARCHITECT OF ANY IRREGULARITY, OMISSION OR DIVERGENCE BETWEEN THESE DOCUMENTS, THOSE OF THE OTHER PROFESSIONALS, AND THE CONDITIONS OBSERVED ON SITE. NO DIMENSION SHALL BE SCALED FROM THE DRAWINGS.

ALL CONSTRUCTION WORK MUST COMPLY WITH THE CURRENT EDITION OF THE LOCAL/ PROVINCIAL CONSTRUCTION CODE WHERE THE CONSTRCUTION IS TAKING PLACE.

COPYRIGHT NOTE: THIS ARCHITECTURAL DOCUMENT IS THE PROPERTY OF ACDF* AND IS INTENDED EXCLUSIVELY FOR THE PURPOSES MENTIONED HEREIN. ANY REPRODUCTION OR ADAPTATION, PARTIAL OR TOTAL, IS STRICTLY PROHIBITED WITHOUT THE WRITTEN CONSENT OF ACDF*.

THIS DOCUMENT MUST NOT BE USED FOR CONSTRUCTION PURPOSES

OWNER / PROPRIÉTAIRE

4329163 CANADA INC.
6310 HAZELDEAN ROAD
P.O.BOX 1791
STITTSVILLE (ON), K2S 1B4

CLIENT

LES PROPRIÉTÉS SCALIA INC
5139 DE COURTRAIN AVENUE,
BUREAU 300
(514) 525-2929
MONTRÉAL (QC), H3W 0A9

PLANNER

FOTENN PLANNING + DESIGN
420 O'CONNOR STREET
613-730-5709
OTTAWA (ON), K2P 1W4

CIVIL

LRL ENGINEERING
5430 CANOTEK ROAD
PHONE: 613-842-3434
FAX: 613-842-4338
OTTAWA (ON), K1J 9G2

LANDSCAPE ARCHITECTS / ARCHITECTES DU PAYSAGE

JAMES B. LENNOX & ASSOCIATES INC.
LANDSCAPE ARCHITECTS

JAMES B. LENNOX & ASSOCIATES INC.
3332 CARLING AVENUE
PHONE: 613-722-5168
FAX: 1-866-343-3942
OTTAWA (ON), K2H 5A8

MECANIC - ELECTRICITY / MÉCANIQUE - ÉLECTRICITÉ

GOODKEY, WEEMARK & ASSOCIATES LTD.
1688 WOODWARD DRIVE
PHONE: 613-727-5111
FAX: 613-727-5115
OTTAWA (ON), K2C 3R8

STRUCTURE

LEROUX + CYR
130 BOUL. HENRI-BOURASSA EST
MONTRÉAL (QC), H3L 1B7

NO.	ÉMISSION	DATE	PAR
1	SPA REVISION 01	XX-XX-XXXX	

ARCHITECTS

ACDF ARCHITECTURE

Montréal
6250, rue Hutchison, suite 201
QC H2V 4C5
T : **514 456-1151**
F : 514 288-0418

St-Hyacinthe
1690, rue Girouard Ouest
QC J2S 2Z7
T : **450 778-1151**
F : 450 778-1594

PROJECT

SCALIA
STITTSVILLE-HAZELDEAN
6310 Hazeldean Rd, Ottawa, ON K2S 0T2

DRAWING
SITE PLAN

SCEAU

DOSSIER / NUMBER: 25-1839
DESSIN / DRAWING NO: A-025
REV. NO.: 1
DATE: OCTOBER 2025
ÉCHELLE / SCALE: 1 : 300
DESSINÉ PAR / DRAWN BY: FM
VÉRIFIÉ PAR / VERIFIED BY: FM

APPENDIX C

Pre-con Meeting Notes

Pre-Application Consultation Meeting Notes

2:00pm to 3:00pm, November 17, 2021, via Microsoft Teams
Property Address: 6310 Hazeldean Road
File No.: PC2021-0388

Attendees:

Laurel McCreight – Planner, City of Ottawa
Matthew Ippersiel – Urban Designer, City of Ottawa
Justin Armstrong – Project Manager (Infrastructure), City of Ottawa
Josiane Gervais – Project Manager (Transportation), City of Ottawa
Jeffrey Ren – Co-op Student, City of Ottawa
Mark Richardson – Planning Forester, City of Ottawa
Erica Ogden – MVCA
Miguel Tremblay – Fotenn
Rejane Padaratz – Fotenn
Tana Klein – Fotenn
Michael Uberti – Property Owner
Marco Recine – Property Owner

Regrets:

Jaime Posen – Fotenn
Kersten Nitsche – Parks Planner, City of Ottawa

Applicant's Proposal:

- To construct three nine-storey mixed-use buildings with ground floor commercial units. A total of approximately 317 dwelling units are proposed. 2,282 m² of commercial space and 33,544 m² of residential space will be provided along with approximately 96 surface parking spaces and an undetermined number of underground parking spaces, most of the site will have underground parking.

Preliminary comments and questions from staff and agencies, including follow-up actions:

Transportation

- Follow Transportation Impact Assessment Guidelines
    - A TIA is required. Submit a Screening Form at your earliest convenience to josiane.gervais@ottawa.ca.
    - TIAs in support of rezoning must demonstrate the worst-case scenario traffic generated from the zoning being sought.
    - Start this process asap. The application will not be deemed complete until the submission of the draft step 1-4.

- An update to the *TRANS Trip Generation Manual* has been completed (October 2020). This manual is to be utilized for this TIA. A copy of this document can be provided upon request.

- ROW protection on Hazeldean between Stittsville west urban limit and Carp Road is 37.5m even.
- TMP identifies Hazeldean Road as a cycling Spine Route.
- The following notes are provided for information and will be applicable at the time of SPA:
  - TIA would require an update to include the Network Design Component Modules of the TIA.
  - If modifications are required to the traffic signal, this would trigger an RMA.
  - Ensure site access meets the City's Private Approach Bylaw.
  - Ensure site access throat length can adequately accommodate forecast traffic volumes.
  - Provide concrete sidewalk along Hazeldean Rd.
  - Show all details of the roads abutting the site up to and including the opposite curb; include such items as pavement markings, accesses and/or sidewalks.
  - Turning movement diagrams required for all accesses showing the largest vehicle to access/egress the site.
  - Turning movement diagrams required for internal movements (loading areas, garbage).
  - Show all curb radii measurements; ensure that all curb radii are reduced as much as possible and fall within TAC guidelines (Figure 8.5.1).
  - Show dimensions for site elements (i.e. lane/aisle widths, access width and throat length, parking stalls, sidewalks, pedestrian pathways, etc.)
  - Sidewalk is not to be continuous across access as per City Specification 7.1.
  - Show slope of garage ramp on site plan. Note that underground ramps should be limited to a 12% grade and must contain a subsurface melting device when exceeding 6%. Ramp grades greater than 15% can be psychological barriers to some drivers.
  - As the proposed site is commercial/institutional/industrial and for general public use, AODA legislation applies. Consider using the City's Accessibility Design Standards.
  - Ensure all crosswalks located internally on the site provide a TWSI at the depressed curb, per requirements of the Integrated Accessibility Standards Regulation under the AODA.

- Parking stalls at the end of dead-end parking aisles require adequate turning around space.
- Grey out any area that will not be impacted by this application.

Please contact Transportation Project Manager Josiane Gervais (Josiane.Gervais@ottawa.ca) for follow-up questions.

Infrastructure

- The Servicing Study Guidelines for Development Applications are available at the following address: http://ottawa.ca/en/development-application-review-process-0/servicing-study-guidelines-development-applications
- Servicing and site works shall be in accordance with the following documents:
  - ⇨ Ottawa Sewer Design Guidelines (October 2012)
  - ⇨ Ottawa Design Guidelines – Water Distribution (2010)
  - ⇨ Geotechnical Investigation and Reporting Guidelines for Development Applications in the City of Ottawa (2007)
  - ⇨ City of Ottawa Slope Stability Guidelines for Development Applications (revised 2012)
  - ⇨ City of Ottawa Environmental Noise Control Guidelines (January, 2016)
  - ⇨ City of Ottawa Park and Pathway Development Manual (2012)
  - ⇨ City of Ottawa Accessibility Design Standards (2012)
  - ⇨ Ottawa Standard Tender Documents (latest version)
  - ⇨ Ontario Provincial Standards for Roads & Public Works (2013)
- Record drawings and utility plans are also available for purchase from the City (Contact the City's Information Centre by email at InformationCentre@ottawa.ca or by phone at (613) 580-2424 x.44455).
- Hazeldean Road was resurfaced in 2019 and the road is under a 3-year Road-Cut moratorium into 2022. As such, any road cuts into Hazeldean that are to be made prior to the lifting of the moratorium will be subject to increased fees and higher reinstatement standards. The exact timeline for moratorium lifting can be explored once a formal submission is made.

Storm

- The Stormwater Management Criteria, for the subject site, is to be based on the following:

i. The 5-yr storm event using the IDF information derived from the Meteorological Services of Canada rainfall data, taken from the MacDonald Cartier Airport, collected 1966 to 1997.

ii. The pre-development runoff coefficient <u>or</u> a maximum equivalent 'C' of 0.5, whichever is less (§ 8.3.7.3).

iii. A calculated time of concentration (Cannot be less than 10 minutes).

iv. Flows in excess of the 5-year storm release rate, up to and including the 100-year storm event, must be detained on site.

v. The stormwater outlet for the site is the ditch that crosses the site at the eastern limit.

vi. No ponding on drive aisles and parking areas is permitted during the 2-year event.

vii. SWM calculations using the modified rational method is acceptable, however, if a combination of surface ponding and underground storage is used, the consultant is reminded to either: (a) use a dynamic computer model or (b) use the modified rational method assuming an average release rate of 50% of the area-specific peak flow rate where above and below ground storage is provided.

- It has been confirmed that there is a 10m wide existing drainage easement OC626261 in place at the site's eastern limit and that this easement is in favour of the City of Ottawa. The conditions set out in the easement must be respected. One of the most important conditions is unimpeded access. The last time the ditch was cleaned a triaxle, large shovel, mini excavator and a bobcat were all used. The full 10m was used then. The City's Operations Branch can be circulated for further comment once a formal application is submitted.
- Note that the City's Operations branch has previously been contacted regarding the piping of the drainage ditch along the east property boundary. They provided the following in response: Piping of the drainage ditch may be acceptable as long as a thorough SWM assessment is provided for the system up-to and including the downstream DICB. Regardless of the site's portion of the drainage ditch being piped, City operations would still be responsible to maintain the portion of ditch downstream. Also note that due to the past historic flooding issues for this area the City opposes a reduction in the easement width. Further, drainage maintenance staff also indicated that due to rear yard flooding history at a property on Kyle Ave related to the easement and ditch on 6310 Hazeldean, if piping is proposed, the ditch will need to be piped along the site and through other properties to the downstream DICB.

Sanitary

- The available sanitary sewer is located west of the site on the neighbouring property within an easement in favour of the City of Ottawa. If sanitary service is proposed to connect to this sewer section, an easement with the neighbouring property will be required. This is the City's preferred method of connection for this site.
- The City's Asset Management Branch and Sewer Operations Branch have confirmed that, alternatively, connection can be made to the maintenance hole located within the Hazeldean road boulevard. The preferred connection method under this alignment would be for the owner to provide a small sewer extension in the Hazeldean ROW. The sewer extension would be a standard sewer extension and would require MECP ECA approval. The City would eventually assume ownership of the sewer within the ROW. The connection should be made obvert to obvert with the outlet pipe.
- A monitoring maintenance hole shall be required just inside the property line for all non-residential and multi residential buildings connections from a private sewer to a public sewer. The maintenance hole should be located in an accessible location on private property near the property line (i.e., not in a parking area).

Water

- Water Frontage fees may apply if they have not already been paid.
- In order to avoid the creation of a vulnerable service area (VSA) water service redundancy is required if there are more than 49 dwellings/units proposed and/or there is more than 50m^3/day of basic day demand.
- The City's Water Meter Group will only accept a single City water meter per property parcel. For multi-building parcels, all buildings can be privately sub metered, however each building should obtain their water supply downstream of the single City water meter
- Water Boundary condition requests must include the location of the service and the expected loads required by the proposed development. Please provide the following information to the Infrastructure Approvals Project Manager:
    i. GeoOttawa Snippet showing proposed location of service.
    ii. Type of development and the amount of fire flow required as per ISTB-2021-03 Section 4.2.11.
    iii. Average daily demand: ___ l/s.
    iv. Maximum daily demand: ___l/s.
    v. Maximum hourly daily demand: ___ l/s.

MECP

- MECP ECA Requirements
- An MECP Environmental Compliance Approval (Private Sewage Works) will be required for the proposed development if the proposal does not meet exemption requirements as outlined in MECP O.Reg 525/989 (3).
- Phase 1 ESAs and Phase 2 ESAs must conform to clause 4.8.4 of the Official Plan that requires that development applications conform to Ontario Regulation 153/04.

Please contact Infrastructure Project Manager Justin Armstrong (Justin.Armstrong@ottawa.ca) for follow-up questions.

MVCA

- The subject property is located within the Poole Creek Subwatershed and is within the Carp River Watershed Subwatershed Plan, which required an annual infiltration rate of 104mm/yr for areas within moderate groundwater recharge.
- The water quality requirement is an enhanced level of protection which requires 80% total suspended solids removal.
- Poole Creek is a cold-cool water system; therefore, temperature mitigation should be incorporated into the stormwater management design.
- For a Zoning By-law Amendment is applied for initially, the stormwater report can be scoped to demonstrate that the above criteria can be achieved on site with the detailed design to follow with Site Plan Control.

Please contact MVCA Planner Erica Ogden (eogden@mvc.on.ca) for follow-up questions.

Urban Design

- Site Organization & Massing
    - Please reorient the middle building to have the front facade follow the geometry of Hazeldean Road. This is supported by the direction of the New Official Plan, the Zoning By-law and the Urban Design Guidelines for Arterial Mainstreets.
    - The space between the two long nine-storey facades will likely create an uncomfortable space. The central building should be shifted to the west and it would be preferable for its footprint to be reconfigured as a “bar” building rather than an “L-shaped” building. If a bar building cannot be achieved, shorten the “arm” of the building from the 46.7m length currently proposed.
- Open Space and Connectivity
    - The inclusion of the POPS/plaza is appreciated, but the space should be relocated to the interior of the site. This would improve access to sunlight, make for a more comfortable, enclosed space, bring needed greening into the courtyard, and could have a better interface with the retail at grade.

    - Narrow the pedestrian mid-block connection by shifting the central building footprint to the west and reallocate the space to the east side of the central building. The concept of a mid-block pedestrian connection is supported, but a more valuable location for a strong pedestrian connection would be on the east of the central building, where it can be aligned with the crosswalk on Hazeldean. This will also increase space for wider sidewalks, trees and landscaping, and provide a more prominent "gateway" to the site and greater separation between building facades.
    - Ensure that strong and safe pedestrian connections are provided throughout the site.
- Other Design Considerations
    - Reconsider the locations of the garbage enclosures. They should be internalized into the buildings or relocated to the space south of the buildings.
    - Ensure that impacts on the established low-rise residential neighbourhood to the south are minimized. The stepping of the massing is good in this respect. Increase the width of the planting strip along the southern property line and maintain as many existing trees as possible.
- Urban Design Review Panel
    - A Formal Review with the City's Urban Design Review Panel (UDRP) is required. Please contact the Panel Coordinator to schedule the meeting.
    - Providing the coordinator with an early "heads-up" as to which meeting is being targeted, once it is known, is recommended. A full list of upcoming panel meeting dates, submission deadlines and other information can be found on the UDRP website.
    - Note that a second Formal review with the Panel will be required at the Site Plan Control stage.
- Design Brief
    - A scoped Urban Design Brief is required as a part of your submission. This may be combined with your Planning Rationale report. Please refer to the attached Urban Design Brief Terms of Reference to inform the content of the brief.

Please contact Urban Designer Matthew Ippersiel (Matthew.Ippersiel@ottawa.ca) for follow-up questions.

Parks

- Pursuant to Section 3 and Section 10(1) Parkland Dedication By-law 2009-05, as amended, at the time of Site Plan Control, cash-in-lieu of parkland shall be paid by the Owner as follows:
    - Residential: Uplift of units on the site, not to exceed 10% of the land area of the site
    - Commercial: 2% of site area

- For mixed use development, the parkland requirement for each use will be based upon the above rates prorated proportionately to the GFA allocated to each use

Please contact Parks Planner Kersten Nitsche (Kersten.Nitsche@ottawa.ca) for follow-up questions.

Forestry

TCR Requirements

- A Tree Conservation Report (TCR) must be supplied for review along with the suite of other plans/reports required by the City
- An approved TCR is a requirement of Site Plan approval.
- The TCR may be combined with the LP provided all information is supplied
- As of January 1, 2021, any removal of privately-owned trees 10cm or larger in diameter, or publicly (City) owned trees of any diameter requires a tree permit issued under the Tree Protection Bylaw (Bylaw 2020 – 340); the permit will be based on an approved TCR and made available at or near plan approval.
- The Planning Forester from Planning and Growth Management as well as foresters from Forestry Services will review the submitted TCR
- If tree removal is required, both municipal and privately-owned trees will be addressed in a single permit issued through the Planning Forester
- Compensation may be required for city owned trees – if so, it will need to be paid prior to the release of the tree permit
- The TCR must list all trees on site, as well as off-site trees if the CRZ extends into the developed area, by species, diameter and health condition
- please identify trees by ownership – private onsite, private on adjoining site, city owned, co-owned (trees on a property line)
- the TCR must list all trees on adjacent sites if they have a critical root zone that extends onto the development site
- If trees are to be removed, the TCR must clearly show where they are, and document the reason they cannot be retained
- All retained trees must be shown and all retained trees within the area impacted by the development process must be protected as per City guidelines available at Tree Protection Specification or by searching Ottawa.ca
- the location of tree protection fencing must be shown on a plan
- show the critical root zone of the retained trees
- if excavation will occur within the critical root zone, please show the limits of excavation

- the City encourages the retention of healthy trees; if possible, please seek opportunities for retention of trees that will contribute to the design/function of the site.
- For more information on the process or help with tree retention options, contact Mark Richardson mark.richardson@ottawa.ca or on City of Ottawa

LP Tree Planting Requirements

- For additional information on the following please contact tracy.smith@Ottawa.ca
- Minimum Setbacks
    - Maintain 1.5m from sidewalk or MUP/cycle track.
    - Maintain 2.5m from curb
    - Coniferous species require a minimum 4.5m setback from curb, sidewalk or MUP/cycle track/pathway.
    - Maintain 7.5m between large growing trees, and 4m between small growing trees. Park or open space planting should consider 10m spacing.
    - Adhere to Ottawa Hydro's planting guidelines (species and setbacks) when planting around overhead primary conductors.
- Tree specifications
    - Minimum stock size: 50mm tree caliper for deciduous, 200cm height for coniferous.
    - Maximize the use of large deciduous species wherever possible to maximize future canopy coverage
    - Tree planting on city property shall be in accordance with the City of Ottawa's Tree Planting Specification; and include watering and warranty as described in the specification (can be provided by Forestry Services).
    - Plant native trees whenever possible
    - No root barriers, dead-man anchor systems, or planters are permitted.
    - No tree stakes unless necessary (and only 1 on the prevailing winds side of the tree)
- Hard surface planting
    - Curb style planter is highly recommended
    - No grates are to be used and if guards are required, City of Ottawa standard (which can be provided) shall be used.
    - Trees are to be planted at grade
- Soil Volume
    - Please ensure adequate soil volumes are met:

Tree Type/Size	Single Tree Soil Volume (m3)	Multiple Tree Soil Volume (m3/tree)
Ornamental	15	9
Columnar	15	9
Small	20	12
Medium	25	15
Large	30	18
Conifer	25	15

- Please note that these soil volumes are not applicable in cases with Sensitive Marine Clay.

Sensitive Marine Clay

- Please follow the City's 2017 Tree Planting in Sensitive Marine Clay guidelines

Please contact Planning Foresters Mark Richardson (Mark.Richardson@ottawa.ca) and Tracey Smith (Tracey.Smith@ottawa.ca) for follow-up questions.

Planning

- Please note that the New Official Plan was approved by City Council on October 27, 2021 and is subject to review by the Ministry of Municipal Affairs and Housing with approval anticipated in February 2022; the application is expected to fall under the New Official Plan.
- Please review all applicable Official Plan policies when they become available to ensure that the proposed development complies with the policies of the New Official Plan.
- Minimum-density requirements as identified in Table 3a will apply (Minimum 120 People and Jobs per Gross Hectare and Dwellings per Net Hectare, minimum 5% and targeted 10% Large-household Dwellings). Please perform the necessary calculations to ensure that the density requirements of the New Official Plan are being met.
- Please address urbanization of Hazeldean Road. If this section of road is not urbanized, please consider how the treatment of your frontage should be handled to ensure there is adequate room for tree planting.
- Please ensure that a 5-metre-wide landscaped buffer is provided along the rear lot line; if a reduction is sought, please rationalize why a 5-metre-wide landscaped buffer cannot be provided. Although there is a vegetation behind the site, fencing may be appropriate given the rear yard condition of the abutting lots. Please note that the provisions of Urban Exception 2102 are specific to the previously existing garden centre and building supply outlet.
- Please consider aligning the middle building with Hazeldean Road, this will ensure that 50% of the lot width within 3 metres of the front lot line is occupied by building walls.
- A privately owned publicly accessible space may not be appropriate along Hazeldean Road – Hazeldean Road is a busy arterial road, and an alternative placement of the POPS/amenity space may be more welcoming. An amenity area behind the middle building may be more appropriate.

- Please ensure that a sufficient number of visitor parking spaces are provided, the surrounding residential neighbourhood has been vocal about their concerns regarding spillover parking.
- Please note that the subject property is not on a transit priority corridor – if there are any parking reductions that are proposed, it will need to be rationalized in the Planning Rationale.
- Garbage pickup should be internalized within the building.
- Please note that the Ottawa Fire Service (OFS) does not approve a fire route that goes over a parking garage structure. If the applicant wishes to pursue this layout, they will have to build the parking garage deck to bridge standard (15 kPa) and provide a stamped letter from an architect/engineer that it has been designed and built to this requirement. This letter will have to be provided to OFS after completion for our records. Additionally, some signage will have to be installed at the site indicating where the edge of the parking structure begins and that it has been designed to meet OFS requirements.
- Please review the Urban Design Guidelines for Development along Arterial Mainstreet for general design guidance.
- Please reach out to Councillor Glen Gower (Glen.Gower@ottawa.ca) so that the Ward Councillor is aware of the plans for the site.
- A Minor Zoning By-law Amendment application will be required to permit an increased height, please find the application form and information on fees here.
- The application will be subject to public consultation (conducted through the posting of on-site signage, the notification of community groups, and through the City of Ottawa's DevApps website); the statutory public meeting for Zoning By-law Amendments is Planning Committee, however, please note that the Councillor may also ask for a Community Information and Comment Session.

Please contact File Lead Laurel McCreight (Laurel.McCreight@ottawa.ca) for follow-up questions.

Other

Please refer to the links to the guide to preparing studies and plans and development application fees for general information. Additional information is available related to building permits, development charges, and the Accessibility Design Standards. Be aware that other fees and permits may be required, outside of the development review process. You may obtain background drawings by contacting informationcentre@ottawa.ca.

These pre-consultation comments are valid for one year. If you submit a development application(s) after this time, you may be required to meet for another pre-consultation meeting and/or the submission requirements may change. You are as well encouraged to contact us for a follow-up meeting if the plan/concept will be further refined.

APPENDIX D

Water Demand Calculations
Boundary Conditions
Fire Hydrant Coverage

Water Supply Calculations

LRL File No.	220027
Date	2025-10-24
Prepared by	Sarthak Vora
Project	6310 Hazeldean Road

Water Demand based on the City of Ottawa Design Guidelines-Water Distribution, 2010

Domestic Demand				
Unit Type	**Persons Per Unit**	**Number of Units**		**Population**
		Building 1	**Building 2**	
Studio	1.4	33	12	63
1 Bedroom Apartment	1.4	142	63	287
2 Bedroom Apartment	2.1	67	106	363.3
3 Bedroom Apartment	3.1	6	28	105.4
	Total	**248**	**209**	**818.7**

Average Water Consumption Rate	280	L/c/d	(As identified in the Technical Bulletin ISTB-2021-03)		
Average Day Demand	**229,236**	**L/d**	**2.65**	**L/s**	
Maximum Day Factor	2.5		(Table 4.2 - City of Ottawa Guidelines - Water Distribution)		
Maximum Daily Demand	**573,090**	**L/d**	**6.63**	**L/s**	
Peak Hour Factor	2.2		(Table 4.2 - City of Ottawa Guidelines - Water Distribution)		
Maximum Hour Demand	**1,260,798**	**L/d**	**14.59**	**L/s**	

Institutional / Commercial / Industrial Demand					
Demand Type	**Unit**	**Rate**	**Units**		**Demand (L/d)**
Commercial	28000	L/ha/d	1.07	ha	29960.0

Average Day Demand	**29,960**	**L/d**	**0.347**	**L/s**
Maximum Day Factor	1.5		(Table 4.2 - City of Ottawa Guidelines - Water Distribution)	
Maximum Daily Demand	**44,940**	**L/d**	**0.520**	**L/s**
Peak Hour Factor	1.8		(Table 4.2 - City of Ottawa Guidelines - Water Distribution)	
Maximum Hour Demand	**80,892**	**L/d**	**0.936**	**L/s**

TOTAL DEMAND				
Average Day Demand	**259,196**	**L/d**	**3.00**	**L/s**
Maximum Daily Demand	**618,030**	**L/d**	**7.15**	**L/s**
Maximum Hour Demand	**1,341,690**	**L/d**	**15.53**	**L/s**

Water Service Pipe Sizing

Q = VA

Where: V = velocity
A = area of pipe
Q = flow rate

Assuming a maximum velocity of 1.8m/s, the diameter of pipe is calculated as:

Minimum pipe diameter (d) =	$(4Q/\pi V)^{1/2}$		
=	0.105	m	
=	105	mm	
Proposed pipe diameter (d) =	**200**	mm	(considering sprinkler system, to be coordinated with mechanical)
=	**8**	Inches	

Fire Flow Calculations

LRL File No. 220027
Project: Proposed Development
Location: 6310 Hazeldean Rd, Ottawa, ON
Date: July 3, 2025
Method: Fire Underwriter's Survey (FUS)
Prepared by:

BUILDING 1- 12 storey

Step	Task	Term	Options	Multiplier	Choose:	Value	Unit	Fire Flow
Construction Coefficient (C)								
1	Choose frame used for building	Coefficient C related to the type of construction	Wood Frame Construction (Type V)	1.5	Noncombustible Construction (Type II)	**0.8**		
			Mass Timber Construction (Type IV-A)	0.8				
			Mass Timber Construction (Type IV-B)	0.9				
			Mass Timber Construction (Type IV-C)	1.0				
			Mass Timber Construction (Type IV-D)	1.5				
			Ordinary Construction (Type III)	1.0				
			Noncombustible Construction (Type II)	0.8				
			Fire Resistive Construction (Type I)	0.6				
Floor Area (A)								
2	Total Effective Floor Area					**17,520**	m^2	
3	Obtain fire flow before reductions	Required fire flow (rounded to nearest 1000)	Fire Flow = 220 x C x $A^{0.5}$				L/min	**24,000**
Occupancy and Contents Adjustment								
4	Choose combustibility of contents	Occupancy hazard reduction or surcharge	Noncombustible	-25%	Limited combustible	**-15%**	L/min	**20,400**
			Limited combustible	-15%				
			Combustible	0%				
			Free burning	15%				
			Rapid burning	25%				
Sprinkler Protection								
5	Choose reduction for sprinklers	Sprinkler reduction	Automatic sprinkler protection designed & installed in accordance with NFPA 13	-30%	True	**-30%**	L/min	**10,200**
			Water supply is standard for both the system and fire department hose lines	-10%	True	**-10%**		
			Fully supervised system	-10%	True	**-10%**		
Exposure Adjustment								
6	Choose separation	Exposure distance	North side	>30m	0%	**15%**	L/min	**13,260**
			East side	10.1 to 20m	15%			
			South side	>30m	0%			
			West side	>30m	0%			
Net Required Fire Flow								
7	Obtain fire flow and duration	Minimum required fire flow (rounded to nearest 1000)					L/min	**13,000**
		Minimum required fire flow					L/s	**216.7**
		Required duration of fire flow					hr	**3**

Fire Flow Calculations

LRL File No. 220027
Project: Proposed Development
Location: 6310 Hazeldean Rd, Ottawa, ON
Date: July 3, 2025
Method: Fire Underwriter's Survey (FUS)
Prepared by:

BUILDING 2- 21 storey

Step	Task	Term	Options	Multiplier	Choose:	Value	Unit	Fire Flow
Construction Coefficient (C)								
1	Choose frame used for building	Coefficient C related to the type of construction	Wood Frame Construction (Type V)	1.5	Noncombustible Construction (Type II)	**0.8**		
			Mass Timber Construction (Type IV-A)	0.8				
			Mass Timber Construction (Type IV-B)	0.9				
			Mass Timber Construction (Type IV-C)	1.0				
			Mass Timber Construction (Type IV-D)	1.5				
			Ordinary Construction (Type III)	1.0				
			Noncombustible Construction (Type II)	0.8				
			Fire Resistive Construction (Type I)	0.6				
Floor Area (A)								
2	Total Effective Floor Area					**7,212**	m^2	
3	Obtain fire flow before reductions	Required fire flow (rounded to nearest 1000)	Fire Flow = 220 x C x $A^{0.5}$				L/min	**15,000**
Occupancy and Contents Adjustment								
4	Choose combustibility of contents	Occupancy hazard reduction or surcharge	Noncombustible	-25%	Limited combustible	**-15%**	L/min	**12,750**
			Limited combustible	-15%				
			Combustible	0%				
			Free burning	15%				
			Rapid burning	25%				
Sprinkler Protection								
5	Choose reduction for sprinklers	Sprinkler reduction	Automatic sprinkler protection designed & installed in accordance with NFPA 13	-30%	True	**-30%**	L/min	**6,375**
			Water supply is standard for both the system and fire department hose lines	-10%	True	**-10%**		
			Fully supervised system	-10%	True	**-10%**		
Exposure Adjustment								
6	Choose separation	Exposure distance	North side	>30m	0%	**15%**	L/min	**8,288**
			East side	>30m	0%			
			South side	>30m	0%			
			West side	10.1 to 20m	15%			
Net Required Fire Flow								
7	Obtain fire flow and duration	Minimum required fire flow (rounded to nearest 1000)					L/min	**8,000**
		Minimum required fire flow					L/s	**133.3**
		Required duration of fire flow					hr	**3**

City of Ottawa - Water Distribution System
Facilities & Feedermains

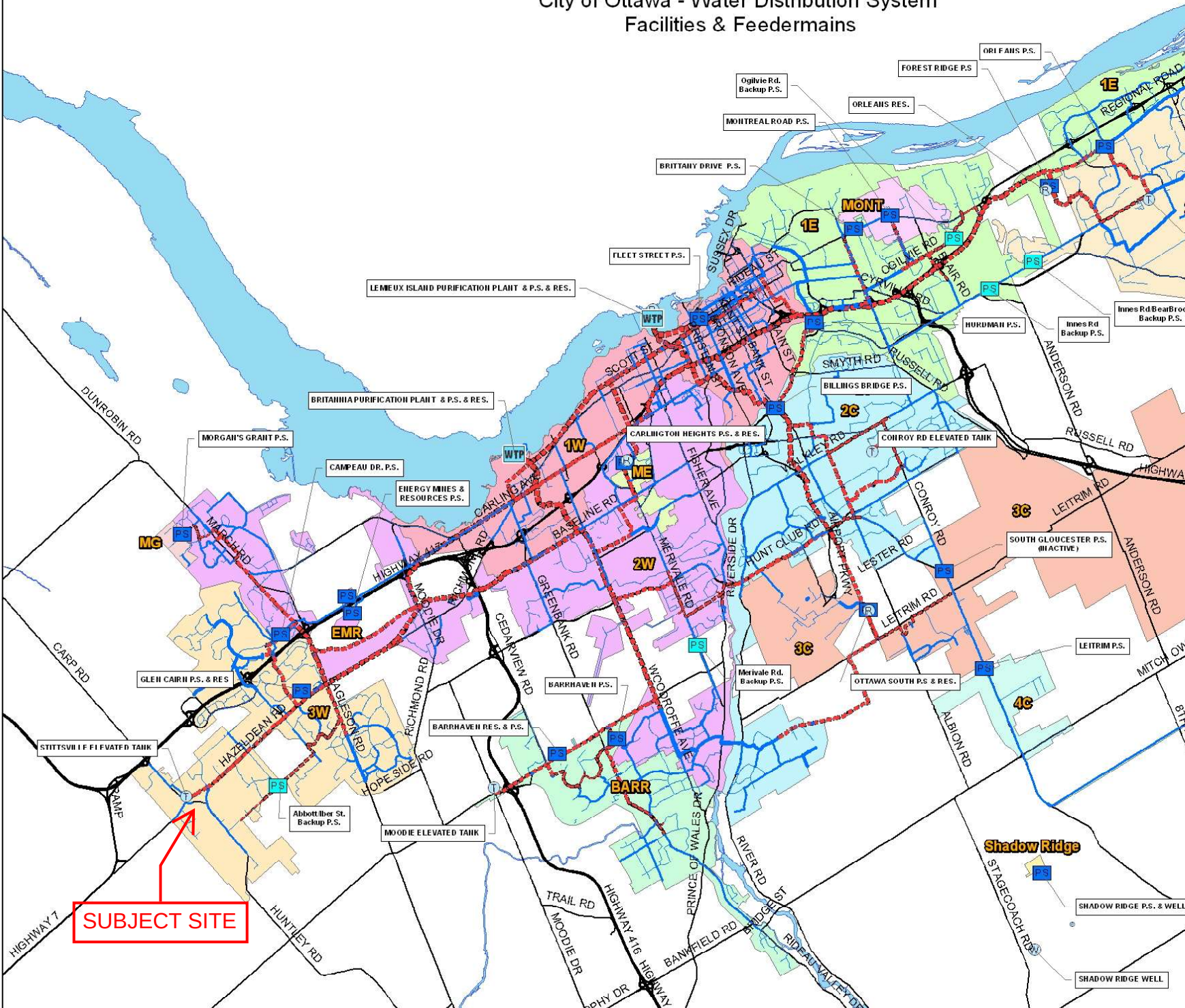

LOCATION OF FIRE HYDRANTS FIGURE

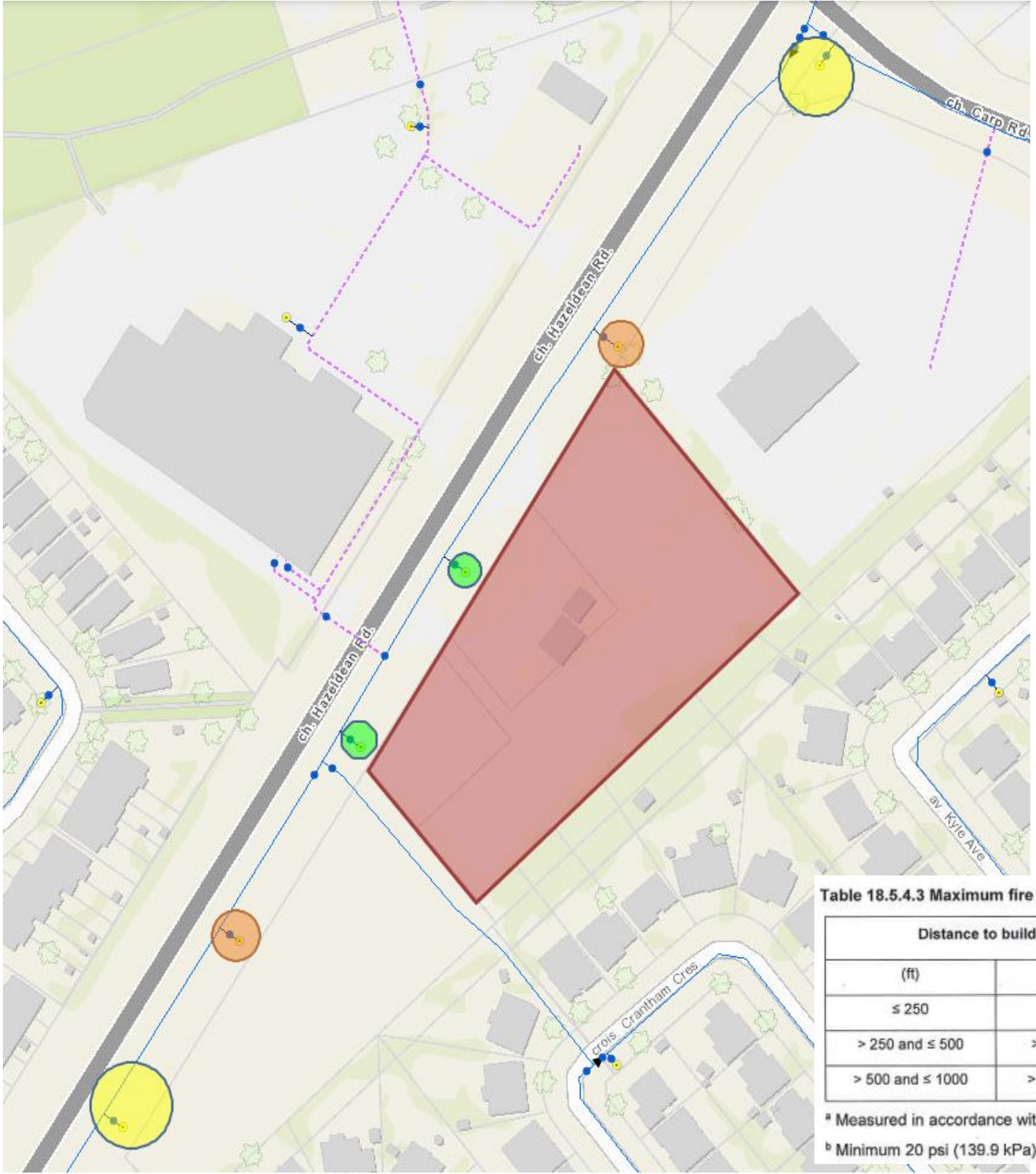

LEGEND

- Hydrants within 75m
- Hydrants within 150m
- Hydrants within 300m

Table 18.5.4.3 Maximum fire flow hydrant capacity

Distance to buildings[a]		Maximum capacity[b]	
(ft)	(m)	(gpm)	(L/min)
≤ 250	≤ 76	1500	5678
> 250 and ≤ 500	> 76 and ≤ 152	1000	3785
> 500 and ≤ 1000	> 152 and ≤ 305	750	2839

[a] Measured in accordance with 18.5.1.4 and 18.5.1.5.

[b] Minimum 20 psi (139.9 kPa) residual pressure.

Boundary Conditions
6310 Hazeldean Road

Provided Information

Scenario	Demand	
	L/min	L/s
Average Daily Demand	160	2.66
Maximum Daily Demand	395	6.59
Peak Hour	868	14.46
Fire Flow Demand #1	13,000	216.67

Location

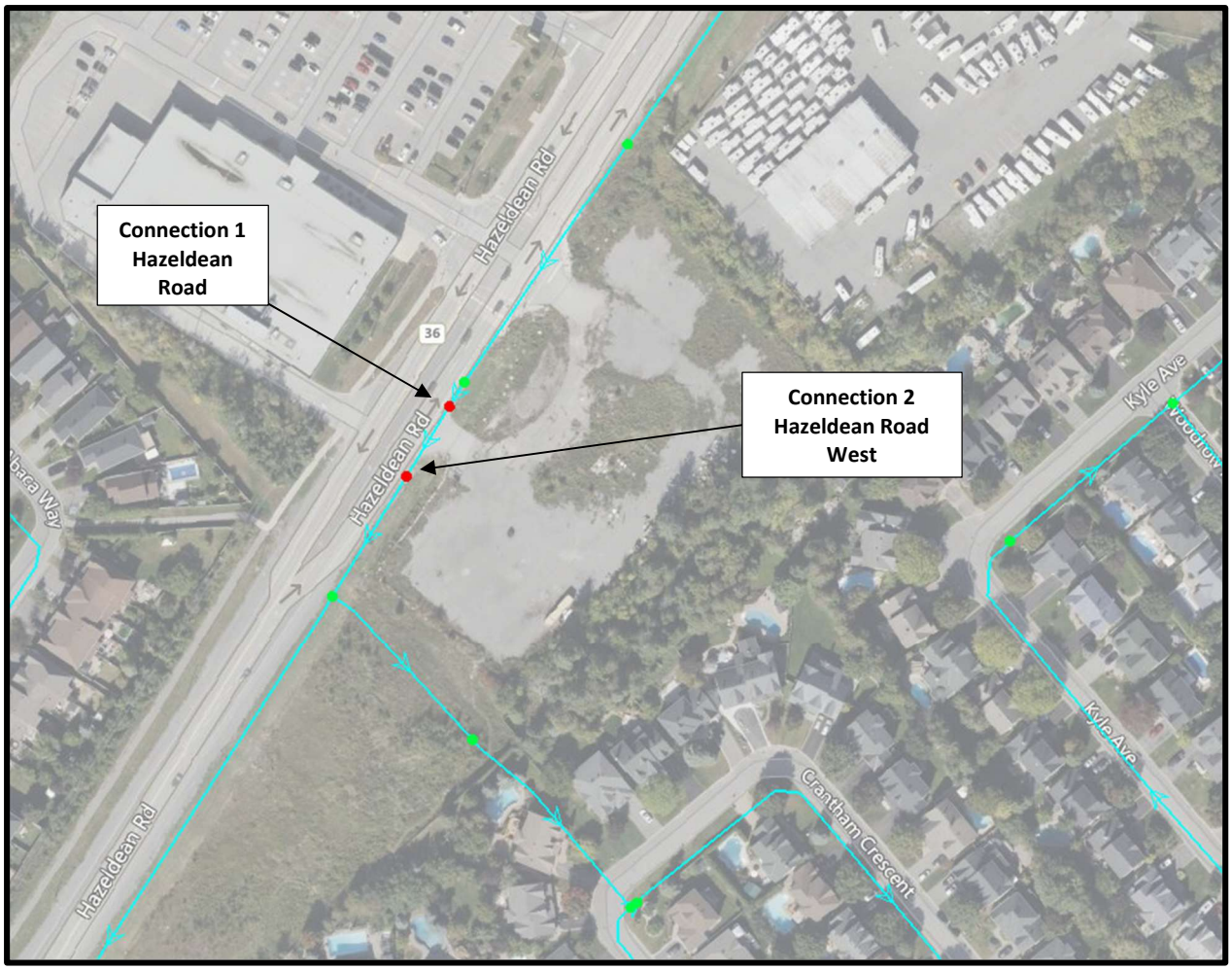

Results

Connection 1 – Hazeldean Road

Demand Scenario	Head (m)	Pressure[1] (psi)
Maximum HGL	160.6	51.0
Peak Hour	157.0	46.0
Max Day plus Fire Flow #1	156.7	45.5

[1] Ground Elevation = 124.7 m

Connection 2 – Hazeldean Road West

Demand Scenario	Head (m)	Pressure[1] (psi)
Maximum HGL	160.6	51.0
Maximum HGL	157.0	46.0
Max Day plus Fire Flow #1	156.6	45.4

[1] Ground Elevation = 124.7 m

Notes

1. The IWSD has recently updated their water modelling software. Any significant difference between previously received BC results and newly received BC results could be attributed to this update.
2. Per the OWDG Tech Bulleting ISTB-2021-03 Section 4.3.1.:
    a. Industrial, commercial, institutional service areas with a basic day demand greater than 50 m^3/day (0.58 L/s) and residential areas serving 50 or more dwellings shall be connected with a minimum of two watermains, separated by an isolation valve, to avoid the creation of a vulnerable service area. Individual residential facilities with a basic day demand greater than 50 m3/day shall be connected with a minimum of two water services, separated by an isolation valve, to avoid the creation of a vulnerable service area.
3. Any connection to a watermain 400 mm or larger should be approved by DWS as per the ***Water Design Guidelines Section 2.4 Review by Drinking Water Services***.

Disclaimer

The boundary condition information is based on current operation of the city water distribution system. The computer model simulation is based on the best information available at the time. The operation of the water distribution system can change on a regular basis, resulting in a variation in boundary conditions. The physical properties of watermains deteriorate over time, as such must be assumed in the absence of actual field test data. The variation in physical watermain properties can therefore alter the results of the computer model simulation. Fire Flow analysis is a reflection of available flow in the watermain; there may be additional restrictions that occur between the watermain and the hydrant that the model cannot take into account.

Mohan Basnet

From: Candow, Julie <julie.candow@ottawa.ca>
Sent: July 23, 2025 1:28 PM
To: Sarthak Vora
Cc: Roy, Jean-Miguel; Mohan Basnet; Maxime Longtin
Subject: RE: Boundary Condition request_6310 Hazeldean Rd (LRL 220027)
Attachments: 6310 Hazeldean Boundary Condition(23July2025).docx

Hi Sarthak,

Please see attached the boundary condition results for 6310 Hazeldean Road. Please note that a connection to the 305mm easement watermain was not approved by DWS. As such, the boundary conditions show two separate connections to the 406mm diameter watermain in Hazeldean Road. Please note, as per the OWDG Tech Bulleting ISTB-2021-03 Section 4.3.1, residential areas serving 50 or more dwellings shall be connected with a minimum of two watermains, separated by an isolation valve, to avoid the creation of a vulnerable service area.

There are no capacity concerns in the 375mm / 450mm diameter sanitary sewer crossing Hazeldean Road south-west of the subject property. That said, a sanitary sewer connection to the 450mm diameter sanitary sewer located within the easement is not permitted. The sanitary sewer connection from the subject site must be made within the Hazeldean Road right-of-way.

Let me know if you have any questions.

Thanks,

Julie Candow, P.Eng
Project Manager
Development Review – West Branch
Planning, Development and Building Services Dept.
110 Laurier Avenue West, 4th Floor East
Ottawa, ON K1P 1J1
613.580.2424 ext. 13850

Classified as City of Ottawa - Internal / Ville d'Ottawa - classé interne

From: Candow, Julie
Sent: July 09, 2025 9:32 AM
To: svora@lrl.ca
Cc: Roy, Jean-Miguel <Jean-Miguel.Roy@ottawa.ca>; Fawzi, Mohammed <mohammed.fawzi@ottawa.ca>; Mohan Basnet <mbasnet@lrl.ca>; Maxime Longtin <mlongtin@lrl.ca>
Subject: RE: Re: Boundary Condition request_6310 Hazeldean Rd (LRL 220027)

Hi Sarthak,

Your BC request has been sent to our team in Infrastructure Planning, along with your capacity check for sanitary sewers.

I will forward you the results once I receive them.

Julie Candow, P.Eng
Project Manager
Development Review – West Branch
Planning, Development and Building Services Dept.
110 Laurier Avenue West, 4th Floor East
Ottawa, ON K1P 1J1
613.580.2424 ext. 13850

From: Fawzi, Mohammed <mohammed.fawzi@ottawa.ca>
Sent: July 09, 2025 9:28 AM
To: Candow, Julie <julie.candow@ottawa.ca>
Cc: Roy, Jean-Miguel <Jean-Miguel.Roy@ottawa.ca>
Subject: FW: Re: Boundary Condition request_6310 Hazeldean Rd (LRL 220027)

Hey Julie,

I believe you are the PM on this one. Please see the email below. The Consultant is following up on their boundary conditions request.

Thank you.

Best Regards,

Mohammed Fawzi, P.Eng.
Senior Project Manager (A), Infrastructure Projects
Development Review – West Branch
Planning, Development and Building Services Department (PDBS)| Direction générale des services de la planification, de l'aménagement et du bâtiment (DGSPAB)
City of Ottawa | Ville d'Ottawa
110 Laurier Avenue West | 110 Avenue Laurier Ouest
Ottawa, ON K1P 1J1
613.580.2424 ext./poste 70120, Mohammed.Fawzi@ottawa.ca

Classified as City of Ottawa - Internal / Ville d'Ottawa - classé interne

---

From: Brault, Ryan <ryan.brault@ottawa.ca>
Sent: July 9, 2025 9:23 AM
To: Fawzi, Mohammed <mohammed.fawzi@ottawa.ca>
Subject: FW: Re: Boundary Condition request_6310 Hazeldean Rd (LRL 220027)

Hey Mo,

FYI, I just received the below follow up for 6310 Hazeldean Rd.

Regards,

Ryan

Classified as City of Ottawa - Internal / Ville d'Ottawa - classé interne

From: Sarthak Vora <svora@lrl.ca>
Sent: Wednesday, July 9, 2025 9:15 AM
To: Brault, Ryan <ryan.brault@ottawa.ca>
Cc: Maxime Longtin <mlongtin@lrl.ca>; Mohan Basnet <mbasnet@lrl.ca>
Subject: RE: Re: Boundary Condition request_6310 Hazeldean Rd (LRL 220027)

CAUTION: This email originated from an External Sender. Please do not click links or open attachments unless you recognize the source.

ATTENTION : Ce courriel provient d'un expéditeur externe. Ne cliquez sur aucun lien et n'ouvrez pas de pièce jointe, excepté si vous connaissez l'expéditeur.

Hi Ryan,

Could you please confirm if my request has been received? This is a critical item currently holding up our submission, and would greatly appreciate an early answer.

Thanks,

Sarthak Vora, Civil E.I.T

LRL ENGINEERING | INGÉNIERIE
Head Office – 5430 Canotek Rd., Ottawa, ON
T +1 613-842-3434 **C** +1 613-915-7633 **E** svora@lrl.ca
Ottawa | Pembroke | Moncton
www.lrl.ca

From: Sarthak Vora
Sent: Thursday, July 3, 2025 4:55 PM
To: ryan.brault@ottawa.ca
Cc: Maxime Longtin <mlongtin@lrl.ca>; Mohan Basnet <mbasnet@lrl.ca>
Subject: Re: Boundary Condition request_6310 Hazeldean Rd (LRL 220027)

Good Afternoon Ryan,

I would like to request boundary conditions and confirmation on the Sanitary sewer capacity for the Proposed Residential Development located at 6310 Hazeldean Rd.

Boundary Conditions Request:

We are requesting boundary conditions for a proposed development consisting of two residential buildings:

- Building 1: 12 storeys
- Building 2: 21 storeys

The development will accommodate a total of 441 residential units, translating to a projected population of 803, and includes approximately 0.1691 hectares of amenity space.

We are proposing a dual water service connection, with two connection points (see attached PDF):

- Connection #1: To the 305mmØ municipal watermain branching off Hazeldean Road towards the southwest side of the development
- Connection #2: To the 406mmØ municipal watermain within the Hazeldean Road right-of-way

Can you please provide the boundary conditions using the following revised proposed development demands:

	Demand (L/s)
Avg. Daily	**2.66**
Max. Day	**6.59**
Peak Hour	**14.46**

	Demand (L/s)
FUS- Building #1	**216.7**
FUS- Building #2	**133.3**

Sanitary Connection

We also determined that the sanitary sewer discharge from the site would be equal to **9.03L/s**. We are proposing to tie into the 450mm sanitary sewer branching off Hazeldean Rd @Connection 1. Please confirm if the existing sanitary sewer will have sufficient capacity to accommodate our discharge.

Attached are the copies of the design sheets for your reference. If any additional information is required, please let me know.

Thanks

Sarthak Vora, Civil E.I.T

LRL ENGINEERING | INGÉNIERIE
Head Office – 5430 Canotek Rd., Ottawa, ON
T +1 613-842-3434 **C** +1 613-915-7633 **E** svora@lrl.ca
Ottawa | Pembroke | Moncton
www.lrl.ca

'

This e-mail originates from the City of Ottawa e-mail system. Any distribution, use or copying of this e-mail or the information it contains by other than the intended recipient(s) is unauthorized. Thank you.

Le présent courriel a été expédié par le système de courriels de la Ville d'Ottawa. Toute distribution, utilisation ou reproduction du courriel ou des renseignements qui s'y trouvent par une personne autre que son destinataire prévu est interdite. Je vous remercie de votre collaboration.

'

SUMMARY OF HYDRAULIC ANALYSIS USING EPANET

Scenario 1: Avg. Day

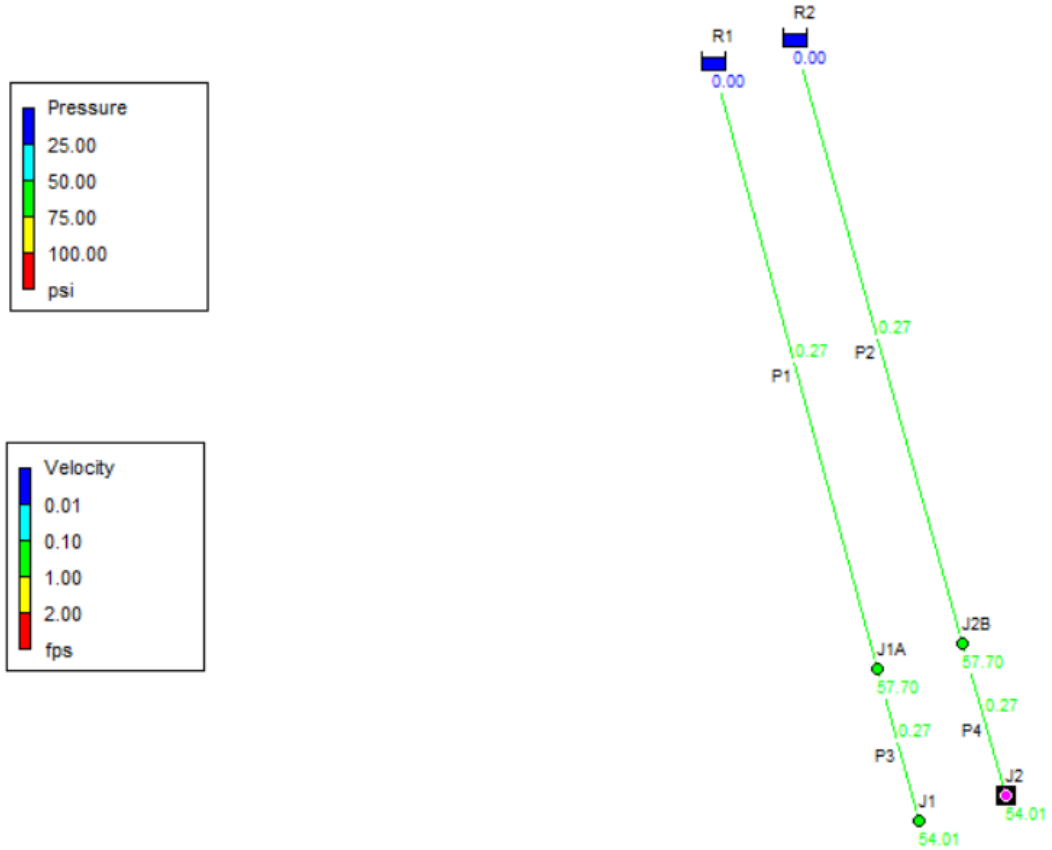

```
**********************************************************************
*                           E P A N E T                              *
*                   Hydraulic and Water Quality                      *
*                   Analysis for Pipe Networks                       *
*                         Version 2.2                                *
**********************************************************************
```

Input File: 220027_Avg Day.net

Link - Node Table:

Link ID	Start Node	End Node	Length ft	Diameter in
P1	R1	J1A	49.2	8
P2	R2	J2B	49.2	8
P3	J1A	J1	12.46	8
P4	J2B	J2	12.46	8

Node Results:

Node ID	Demand GPM	Head ft	Pressure psi	Quality	
J1	42.27	526.77	54.01	0.00	
J2	42.27	526.77	54.01	0.00	
J2B	0.00	526.77	57.70	0.00	
J1A	0.00	526.77	57.70	0.00	
R1	-42.27	526.77	0.00	0.00	Reservoir
R2	-42.27	526.77	0.00	0.00	Reservoir

Link Results:

Link ID	Flow GPM	Velocity fps	Unit Headloss ft/Kft	Status
P1	42.27	0.27	0.05	Open
P2	42.27	0.27	0.05	Open
P3	42.27	0.27	0.04	Open
P4	42.27	0.27	0.04	Open

Scenario 2: Peak Hour

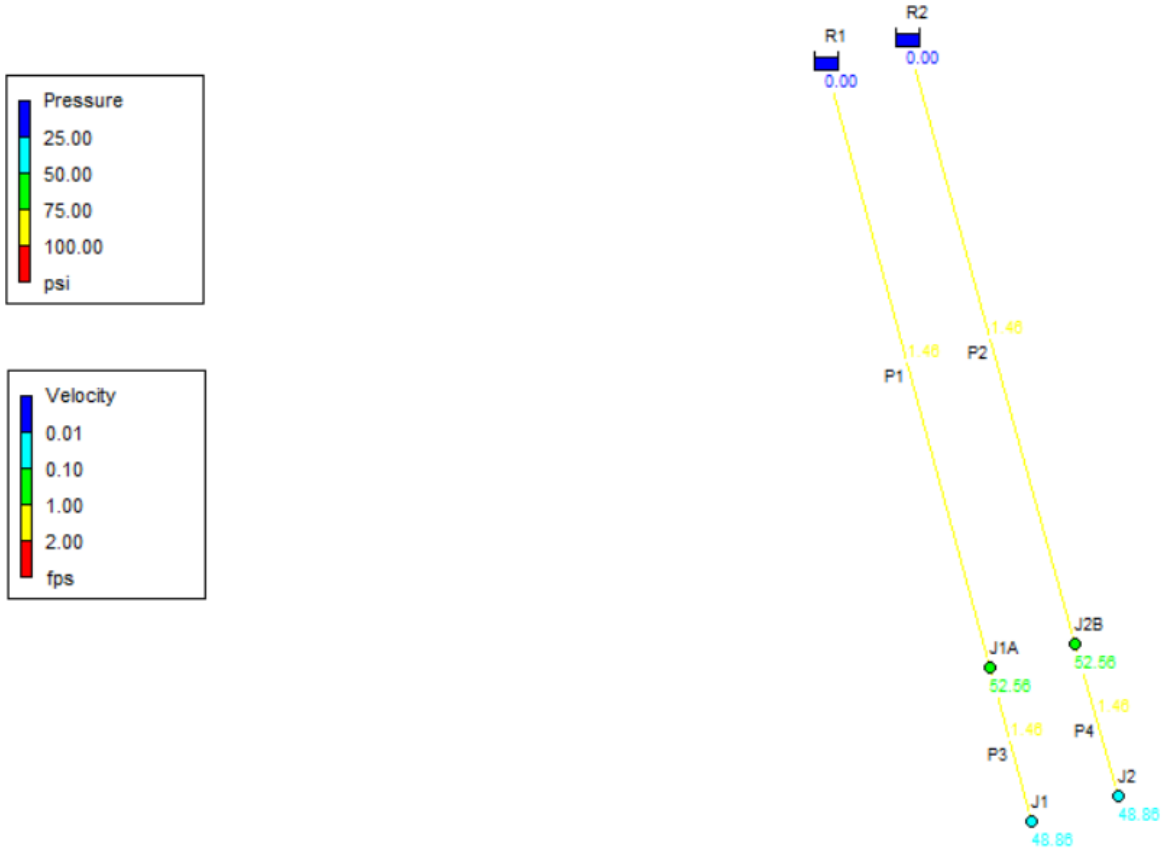

```
**********************************************************************
*                           E P A N E T                              *
*                   Hydraulic and Water Quality                      *
*                   Analysis for Pipe Networks                       *
*                         Version 2.2                                *
**********************************************************************
```

Input File: 220027_Peak Hour.net

Link - Node Table:

Link ID	Start Node	End Node	Length ft	Diameter in
P1	R1	J1A	49.2	8
P2	R2	J2B	49.2	8
P3	J1A	J1	12.46	8
P4	J2B	J2	12.46	8

Node Results:

Node ID	Demand GPM	Head ft	Pressure psi	Quality	
J1	229.30	514.90	48.86	0.00	
J2	229.30	514.90	48.86	0.00	
J2B	0.00	514.91	52.56	0.00	
J1A	0.00	514.91	52.56	0.00	
R1	-229.30	514.96	0.00	0.00	Reservoir
R2	-229.30	514.96	0.00	0.00	Reservoir

Link Results:

Link ID	Flow GPM	Velocity fps	Unit Headloss ft/Kft	Status
P1	229.30	1.46	1.04	Open
P2	229.30	1.46	1.04	Open
P3	229.30	1.46	1.04	Open
P4	229.30	1.46	1.04	Open

Scenario 3: Max. Day + Fire Flow

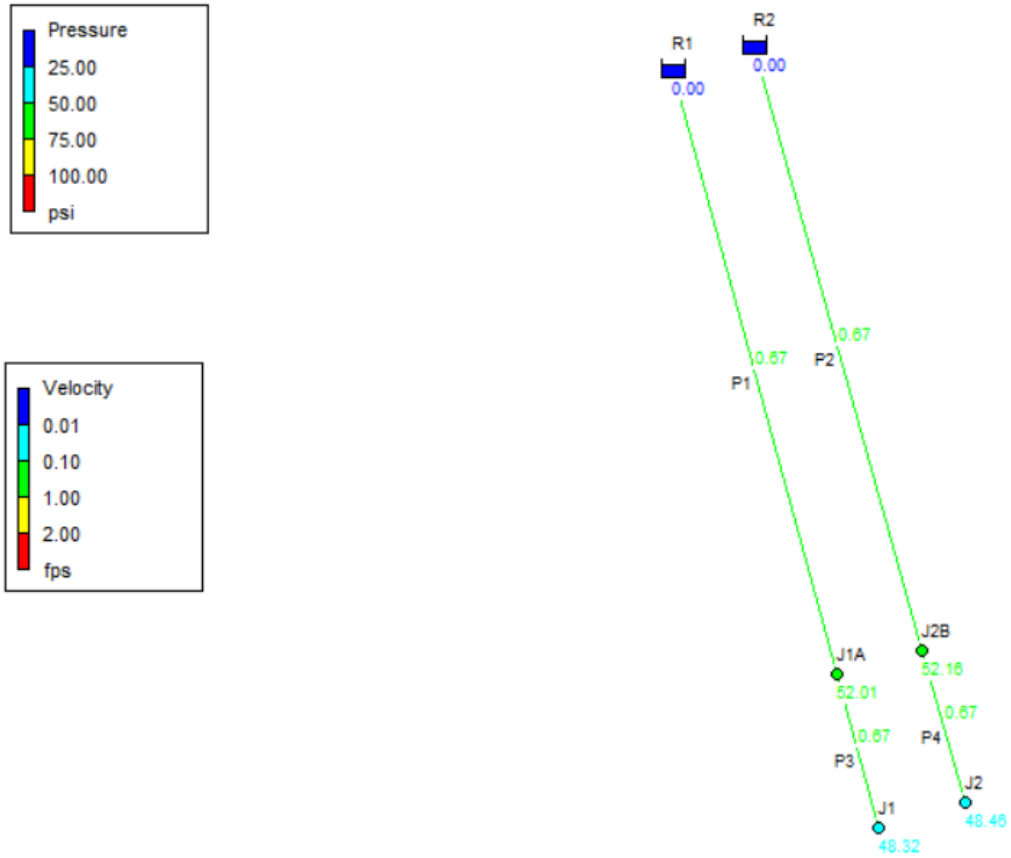

```
**********************************************************************
*                           E P A N E T                              *
*                   Hydraulic and Water Quality                      *
*                   Analysis for Pipe Networks                       *
*                         Version 2.2                                *
**********************************************************************
```

Input File: 220027_Max Day+Fire Flow.net

Link - Node Table:

Link ID	Start Node	End Node	Length ft	Diameter in
P1	R1	J1A	49.2	8
P2	R2	J2B	49.2	8
P3	J1A	J1	12.46	8
P4	J2B	J2	12.46	8

Node Results:

Node ID	Demand GPM	Head ft	Pressure psi	Quality	
J1	104.35	513.64	48.32	0.00	
J2	104.35	513.97	48.46	0.00	
J2B	0.00	513.97	52.16	0.00	
J1A	0.00	513.64	52.01	0.00	
R1	-104.35	513.65	0.00	0.00	Reservoir
R2	-104.35	513.98	0.00	0.00	Reservoir

Link Results:

Link ID	Flow GPM	Velocity fps	Unit Headloss ft/Kft	Status
P1	104.35	0.67	0.24	Open
P2	104.35	0.67	0.24	Open
P3	104.35	0.67	0.24	Open
P4	104.35	0.67	0.24	Open

APPENDIX E

Civil Engineering Drawings

PROPOSED MIXED USE APARTMENT DEVELOPMENT
6310 HAZELDEAN ROAD
OTTAWA, ON

REVISION 04

KEY PLAN (N.T.S.)

DRAWING INDEX	
TITLE PAGE	
GNERAL NOTES	C001
SEDIMENT AND EROSION CONTROL PLAN	C101
DEMOLITION PLAN	C102
GRADING AND DRAINAGE PLAN	C301
SERVICING PLAN	C401
STORMWATER MANAGEMENT PLAN	C601
PRE-DEVELOPMENT WATERSHED PLAN	C701
POST-DEVELOPMENT WATERSHED PLAN	C702
CONSTRUCTION DETAIL PLAN	C901

LRL
ENGINEERING | INGÉNIERIE
5430 Canotek Road | Ottawa, ON, K1J 9G2
www.lrl.ca | (613) 842-3434

MIXED USE APARTMENT DEVELOPMENT
6310 HAZELDEAN ROAD, OTTAWA, ON
REV.04 - ISSUED FOR APPROVAL - 2026-01-26
LRL PROJECT no: 220027

LICENSED PROFESSIONAL ENGINEER
M. BASNET
100501996
2026/01/26
PROVINCE OF ONTARIO

NOT AUTHENTIC UNLESS SIGNED AND DATED

GENERAL NOTES

1. ALL WORKS MATERIALS SHALL CONFIRM TO THE LAST REVISION OF THE STANDARDS AND SPECIFICATIONS FOR THE CITY OF OTTAWA, ONTARIO PROVINCIAL STANDARD DRAWINGS (OPSD) AND SPECIFICATIONS (OPSS), WHERE APPLICABLE. LOCAL UTILITY STANDARDS AND MINISTRY OF TRANSPORTATION STANDARDS WILL APPLY WHERE REQUIRED.
2. THE CONTRACTORS SHALL CONFIRM THE LOCATION OF ALL EXISTING UTILITIES WITHIN THE SITE AND ADJACENT WORK AREAS. THE CONTRACTORS SHALL BE RESPONSIBLE FOR PROTECTING ALL EXISTING UTILITIES TO THE SATISFACTION OF THE AUTHORITY HAVING JURISDICTION. THE CONTRACTOR SHALL BE RESPONSIBLE FOR THE REPAIR OR REPLACEMENT OF ANY SERVICES OR UTILITIES DISTURBED DURING CONSTRUCTION , TO THE SATISFACTION OF THE AUTHORITY HAVING JURISDICTION.
3. ALL DIMENSIONS SHALL BE CHECKED AND VERIFIED IN THE FIELD BY THE CONTRACTOR PRIOR TO THE START OF CONSTRUCTION, ANY DISCREPANCIES SHALL BE REPORTED IMMEDIATELY TO THE ENGINEER. LOST TIME DUE TO FAILURE OF THE CONTRACTORS TO CONFIRM UTILITY LOCATIONS AND NOTIFY ENGINEER OF POSSIBLE CONFLICTS PRIOR TO CONSTRUCTION WILL BE AT CONTRACTORS EXPENSE.
4. ANY AREA BEYOND THE LIMIT OF THE SITE DISTURBED DURING CONSTRUCTION SHALL BE RESTORED TO ORIGINAL CONDITION OR BETTER TO THE SATISFACTION OF THE AUTHORITY HAVING JURISDICTION AT THE CONTRACTOR'S EXPENSE. RELOCATING OF EXISTING SERVICES AND/OR UTILITIES SHALL BE AS SHOWN ON THE DRAWINGS OR DETECTED BY THE ENGINEER AT THE EXPENSE OF DEVELOPERS.
5. ALL WORK SHALL BE COMPLETED IN ACCORDANCE WITH THE 'OCCUPATIONAL HEALTH AND SAFETY ACT AND REGULATIONS FOR CONSTRUCTION PROJECTS'. THE GENERAL CONTRACTORS SHALL BE DEEMED TO BE THE 'CONTRACTOR' AS DEFINED IN THE ACT.
6. ALL THE CONSTRUCTION SIGNAGE MUST CONFIRM TO THE MINISTRY OF TRANSPORTATION OF ONTARIO MANUAL OF UNIFORM TRAFFIC CONTROL DEVICES PER LATEST AMENDMENT.
7. THE CONTRACTOR IS ADVISED THAT WORKS BY OTHERS MAY BE ONGOING DURING THE PERIOD OF THE CONTRACT. THE CONTRACTOR SHALL COORDINATE CONSTRUCTION ACTIVITIES TO PREVENT CONFLICTS.
8. ALL DIMENSIONS ARE IN METRES UNLESS SPECIFIED OTHERWISE.
9. THERE WILL BE NO SUBSTITUTION OF MATERIALS UNLESS PRIOR WRITTEN APPROVAL IS RECEIVED FROM THE ENGINEER.
10. ALL CONSTRUCTION SHALL BE CARRIED OUT IN ACCORDANCE WITH THE RECOMMENDATIONS MADE IN THE GEOTECHNICAL REPORT.
11. FOR DETAILS RELATING TO STORMWATER MANAGEMENT AND ROOF DRAINAGE REFER TO THE SITE SERVICING AND STORMWATER MANAGEMENT REPORT.
12. ALL SEWERS CONSTRUCTED WITH GRADES LESS THAN 1.0% SHALL BE INSTALLED USING LASER ALIGNMENT AND CHECKED WITH LEVEL INSTRUMENT PRIOR TO BACKFILLING.
13. THE CONTRACTOR IS RESPONSIBLE FOR OBTAINING ALL PERMITS REQUIRED AND TO BEAR THE COST OF THE SAME.
14. THE CONTRACTOR SHALL BE RESPONSIBLE FOR ADDITIONAL BEDDING, OR ADDITIONAL STRENGTH PIPE IF THE MAXIMUM TRENCH WIDTH AS SPECIFIED BY OPSD IS EXCEEDED.
15. ALL PIPE/CULVERT SECTION SIZES REFER TO INSIDE DIMENSIONS.
16. SHOULD DEEPLY BURIED ARCHAEOLOGICAL REMAINS BE FOUND ON THE PROPERTY DURING CONSTRUCTION ACTIVITIES, THE HERITAGE OPERATIONS UNIT OF THE ONTARIO MINISTRY OF CULTURE MUST BE NOTIFIED IMMEDIATELY.
17. ALL NECESSARY CLEARING AND GRUBBING SHALL BE COMPLETED BY THE CONTRACTOR. REVIEW WITH CONTRACT ADMINISTRATOR AND THE CITY OF OTTAWA PRIOR TO ANY TREE CUTTING/REMOVAL.
18. DRAWINGS SHALL BE READ ON CONJUNCTION WITH ARCHITECTURAL SITE PLAN.
19. THE CONTRACTOR SHALL PROVIDE THE PROJECT ENGINEER ON SET OF AS CONSTRUCTED SITE SERVICING AND GRADING DRAWINGS.
20. BENCHMARKS: IT IS THE RESPONSIBILITY OF THE CONTRACTOR TO VERIFY THAT THE SITE BENCHMARK(S) HAS NOT BEEN ALTERED OR DISTURBED AND THAT ITS RELATIVE ELEVATION AND DESCRIPTION AGREES WITH THE INFORMATION DEPICTED ON THIS PLAN.

EROSION AND SEDIMENT CONTROL NOTES

GENERAL

THE CONTRACTOR SHALL IMPLEMENT BEST MANAGEMENT PRACTICES, TO PROVIDE FOR PROTECTION OF THE AREA DRAINAGE SYSTEM AND THE RECEIVING WATERCOURSE, DURING CONSTRUCTION ACTIVITIES. THE CONTRACTOR ACKNOWLEDGES THAT FAILURE TO IMPLEMENT APPROPRIATE EROSION AND SEDIMENT CONTROL MEASURES MAY BE SUBJECT TO PENALTIES IMPOSED BY ANY APPLICABLE REGULATORY AGENCY.

THE CONTRACTOR ACKNOWLEDGES THAT SURFACE EROSION AND SEDIMENT RUNOFF RESULTING FROM THEIR CONSTRUCTION OPERATIONS HAS POTENTIAL TO CAUSE A DETRIMENTAL IMPACT TO ANY DOWNSTREAM WATERCOURSE OR SEWER, AND THAT ALL CONSTRUCTION OPERATIONS THAT MAY IMPACT UPON WATER QUALITY SHALL BE CARRIED OUT IN MANNER THAT STRICTLY MEETS THE REQUIREMENT OF ALL APPLICABLE LEGISLATION AND REGULATIONS.

AS SUCH, THE CONTRACTOR SHALL BE RESPONSIBLE FOR CARRYING OUT THEIR OPERATIONS, AND SUPPLYING AND INSTALLING ANY APPROPRIATE CONTROL MEASURES, SO AS TO PREVENT SEDIMENT LADEN RUNOFF ENTERING ANY SEWER OR WATERCOURSE WITHIN OR DOWNSTREAM OF THE WORKING AREA.

THE CONTRACTOR ACKNOWLEDGES THAT NO ONE MEASURE IS LIKELY TO BE 100% EFFECTIVELY FOR EROSION PROTECTION AND CONTROLLING SEDIMENT RUNOFF AND DISCHARGES FROM THE SITE. THEREFORE, WHERE NECESSARY THE CONTRACTOR SHALL IMPLEMENT ADDITIONAL MEASURES ARRANGED IN SUCH MANNER AS TO MITIGATE SEDIMENT RELEASE FROM THE CONSTRUCTION OPERATIONS AND ACHIEVE SPECIFIC MAXIMUM PERMITTED CRITERIA WHERE APPLICABLE. SUGGESTED ON-SITE MEASURES MAY INCLUDE, BUT SHALL NOT BE LIMITED TO, THE FOLLOWING METHODS: SEDIMENT PONDS, FILTER BAGS, PUMP FILTERS, SETTLING TANKS, SILT FENCE, STRAW BALES, FILTER CLOTHS, CATCH BASIN FILTERS, CHECK DAMS AND/OR OTHER RECOGNIZED TECHNOLOGIES AND METHOD AVAILABLE AT THE TIME OF CONSTRUCTION. SPECIFIC MEASURES SHALL BE INSTALLED IN ACCORDANCE WITH REQUIREMENTS OF OPSS 577 WHERE APPROPRIATE, OR IN ACCORDANCE WITH MANUFACTURER'S RECOMMENDATIONS.

WHERE, IN THE OPINION OF THE CONTRACT ADMINISTRATOR OR REGULATORY AGENCY, THE INSTALLED CONTROL MEASURES FAIL TO PERFORM ADEQUATELY, THE CONTRACTOR SHALL SUPPLY AND INSTALL ADDITIONAL OR ALTERNATIVE MEASURES AS DIRECTED BY THE CONTRACT ADMINISTRATOR OR REGULATORY AGENCY, AS SUCH, THE CONTRACTOR SHALL HAVE ADDITIONAL CONTROL MATERIALS ON SITE AT ALL TIME WHICH ARE EASILY ACCESSIBLE AND MAY BE IMPLEMENTED BY HIM AT THE MOMENT'S NOTICE.

PRIOR TO COMMENCING WORK, THE CONTRACTOR SHALL SUBMIT TO THE CONTRACT ADMINISTRATOR SIX COPIES OF A DETAILED EROSION AND SEDIMENT CONTROL PLAN (ESCP). THE ESCP WILL CONSIST OF WRITTEN DESCRIPTION AND DETAILED DRAWINGS INDICATING THE ON-SITE ACTIVITIES AND MEASURES TO BE USED TO CONTROL EROSION AND SEDIMENT MOVEMENT FOR EACH STEP OF THE WORK.

THE EROSION AND SEDIMENT CONTROL (ESC) MEASURES ILLUSTRATED ON THESE DRAWINGS ARE CONSIDERED LIVING MEASURES AND SHALL BE REVIEWED AND ADJUSTED AS SITE CONDITIONS, WEATHER EVENTS, OR CONSTRUCTION SEQUENCING REQUIRE. THE CONTRACTOR SHALL MONITOR ESC PERFORMANCE REGULARLY AND IMPLEMENT ADDITIONAL OR MODIFIED CONTROLS AS NECESSARY TO MAINTAIN EFFECTIVE SEDIMENT AND EROSION PROTECTION. SUFFICIENT ESC MATERIALS SHALL BE KEPT ON-SITE AT ALL TIMES TO FACILITATE TIMELY ADJUSTMENTS AND REPAIRS.

CONTRACTOR'S RESPONSIBILITIES

THE CONTRACTOR SHALL ENSURE THAT ALL WORKERS, INCLUDING SUB-CONTRACTOR, IN THE WORKING ARE ARE AWARE OF THE IMPORTANCE OF THE EROSION AND SEDIMENT CONTROL MEASURES AND INFORMED OF THE CONSEQUENCES OF THE FAILURE TO COMPLY WITH THE REQUIREMENTS OF ALL REGULATORY AGENCIES.

THE CONTRACTOR SHALL PERIODICALLY (WEEKLY), AND WHEN REQUESTED BY THE CONTRACT ADMINISTRATOR, CLEAN OUT ACCUMULATED SEDIMENT DEPOSITS AS REQUIRED AT THE SEDIMENT CONTROL DEVICES, INCLUDING THOSE DEPOSITS THAT MAY ORIGINATE FROM OUTSIDE THE CONSTRUCTION AREA. ACCUMULATED SEDIMENT SHALL BE REMOVED IN SUCH A MANNER THAT PREVENTS THE DEPOSITION OF THIS MATERIAL INTO THE WATERCOURSE AND AVOIDS DAMAGE TO EXISTING SITE FEATURES. THE SEDIMENT SHALL BE REMOVED FROM THE SITE AT THE CONTRACTOR'S EXPENSE AND MANAGED IN COMPLIANCE WITH REQUIREMENTS FRO EXCESS EARTH MATERIAL, AS SPECIFIED ELSEWHERE IN THE CONTRACT.

THE CONTRACTOR IS REQUIRED TO IMPLEMENT SEDIMENT AND EROSION CONTROL MEASURES AT LEAST ONE WEEK BEFORE THE COMMENCEMENT OF ANY CONSTRUCTION ACTIVITIES. THESE MEASURES SHOULD BE THOROUGHLY INSTALLED TO EFFECTIVELY MANAGE SOIL EROSION AND SEDIMENT RUNOFF. FOLLOWING INSTALLATION, THE CONTRACTOR MUST CONDUCT INSPECTIONS OF THESE CONTROL MEASURES ON A WEEKLY BASIS TO ENSURE THEIR ONGOING EFFECTIVENESS AND FUNCTIONALITY.

IN ADDITION TO THE REGULAR WEEKLY INSPECTIONS, THE CONTRACTOR MUST ALSO CARRY OUT ADDITIONAL INSPECTIONS IN THE AFTERMATH OF ANY MAJOR RAINFALL EVENTS. THIS WILL HELP ASSESS THE PERFORMANCE OF THE EROSION CONTROL MEASURES UNDER INCREASED WATER FLOW CONDITIONS. ANY DEFICIENCIES OR DAMAGES IDENTIFIED DURING THESE INSPECTIONS MUST BE PROMPTLY REPAIRED TO MAINTAIN COMPLIANCE AND ENSURE THE INTEGRITY OF THE CONSTRUCTION SITE.

THE CONTRACTOR SHALL BI-WEEKLY, AND WHEN REQUESTED BY THE CONTRACT ADMINISTRATOR, CLEAN OUT ACCUMULATED SEDIMENT DEPOSITS AS REQUIRED AT THE SEDIMENT CONTROL DEVICES, INCLUDING THOSE DEPOSITS THAT MAY ORIGINATE FROM OUTSIDE THE CONSTRUCTION AREA. ACCUMULATED SEDIMENT SHALL BE REMOVED IN SUCH A MANNER THAT PREVENTS THE DEPOSITION OF THIS MATERIAL INTO THE SEWER WATERCOURSE AND AVOIDS DAMAGE TO CONTROL MEASURES. THE SEDIMENT SHALL BE REMOVED FROM THE SITE AT THE CONTRACTOR'S EXPENSE AND MANAGED IN COMPLIANCE WITH REQUIREMENTS FRO EXCESS EARTH MATERIAL, AS SPECIFIED ELSEWHERE IN THE CONTRACT.

THE CONTRACTOR SHALL IMMEDIATELY REPORT TO THE CONTRACT ADMINISTRATOR ANY ACCIDENTAL DISCHARGES OF SEDIMENT MATERIAL INTO EITHER THE WATERCOURSE OR THE STORM SEWER SYSTEM. FAILURE TO REPORT WILL BE CONSTITUTE A BRACH OF THIS SPECIFICATION AND THE CONTRACTOR MAY ALSO BE SUBJECT TO THE PENALTIES IMPOSED BY THE APPLICABLE REGULATORY AGENCY. APPROPRIATE RESPONSE MEASURES, INCLUDING ANY REPAIRS TO EXISTING CONTROL MEASURES OR THE IMPLEMENTATION OF ADDITIONAL CONTROL MEASURES, SHALL BE CARRIED OUT BY THE CONTRACTOR WITHOUT DELAY.

THE SEDIMENT CONTROL MEASURES SHALL ONLY BE REMOVED WHEN, IN THE OPINION OF THE CONTRACT ADMINISTRATOR, THE MEASURE OR MEASURES, IS NO LONGER REQUIRED. NO CONTROL MEASURE MAY BE PERMANENTLY REMOVED WITHOUT PRIOR AUTHORIZATION FROM THE CONTRACT ADMINISTRATOR. ALL SEDIMENT AND EROSION CONTROL MEASURES SHALL BE REMOVED IN A MANNER THAT AVOIDS THE ENTRY OF ANY EQUIPMENT, OTHER THAN HAND-HELD EQUIPMENT, INTO ANY WATERCOURSE, AND PREVENTS THE RELEASE OF ANY SEDIMENT OR DEBRIS INTO ANY SEWER OR WATERCOURSE WITHIN OR DOWNSTREAM OF THE WORKING AREA. ALL ACCUMULATED SEDIMENT SHALL BE REMOVED FROM THE WORKING AREA AT THE CONTRACTOR'S EXPENSE AND MANAGED IN COMPLIANCE WITH THE REQUIREMENTS FOR EXCESS EARTH MATERIAL

WHERE, IN THE OPINION OF EITHER THE CONTRACT ADMINISTRATOR OR A REGULATORY AGENCY, ANY OF THE TERMS SPECIFIED HEREIN HAVE NOT BEEN COMPLIED WITH OR PERFORMED IN A SUITABLE MANNER, OR TAT ALL, THE CONTRACTOR ADMINISTRATOR OR A REGULATORY AGENCY HAS THE RIGHT TO IMMEDIATELY WITHDRAW ITS PERMISSION TO CONTINUE THE WORK BUT MAY RENEW ITS PERMISSION UPON BEING SATISFIED THAT THE DEFAULTS OR DEFICIENCIES IN THE PERFORMANCE OF THIS SPECIFICATION BY THE CONTRACTOR HAVE BEEN REMEDIED.

SPILL CONTROL NOTES

1. ALL CONSTRUCTION EQUIPMENT SHALL BE RE-FUELED, MAINTAINED, AND STORED NO LESS THAN 30 METRES FROM WATERCOURSE, STEAMS, CREEKS, WOODLOTS, AND ANY ENVIRONMENTALLY SENSITIVE AREAS, OR AS OTHERWISE SPECIFIED.
2. THE CONTRACTOR MUST IMPLEMENT ALL NECESSARY MEASURES IN ORDER TO PREVENT LEAKS, DISCHARGES OR SPILLS OF POLLUTANTS, DELETERIOUS MATERIALS, OR OTHER SUCH MATERIALS OR SUBSTANCES WHICH WOULD OR COULD CAUSE AN ADVERSE IMPACT TO THE NATURAL ENVIRONMENT.
3. IN THE EVENT OF A LEAK, DISCHARGE OR SPILL OF POLLUTANT, DELETERIOUS MATERIAL OR OTHER SUCH MATERIAL OR SUBSTANCE WHICH WOULD OR COULD CAUSE AN ADVERSE IMPACT TO THE NATURAL ENVIRONMENT, THE CONTRACTOR SHALL:
   - 3.1. IMMEDIATELY NOTIFY APPROPRIATE FEDERAL, PROVINCIAL, AND LOCAL GOVERNMENT MINISTRIES, DEPARTMENTS, AGENCIES, AND AUTHORITIES OF THE INCIDENT IN ACCORDANCE WITH ALL CURRENT LAWS, LEGISLATION, ACTS, BY-LAWS, PERMITS, APPROVALS, ETC.
   - 3.2. TAKE IMMEDIATE MEASURES TO CONTAIN THE MATERIAL OR SUBSTANCE, AND TO TAKE SUCH MEASURES TO MITIGATE AGAINST ADVERSE IMPACTS TO THE NATURAL ENVIRONMENT.
   - 3.3. RESTORE THE AFFECTED AREA TO THE ORIGINAL CONDITION OR BETTER TO THE SATISFACTION OF THE AUTHORITIES HAVING JURISDICTION.

MUD MAT NOTES

1. THE GRANULAR MATERIAL WILL REQUIRE PERIODIC REPLACEMENT AS IT BECOMES CONTAMINATED BY VEHICLE TRAFFIC.
2. SEDIMENT SHALL BE CLEANED FROM PUBLIC ROADS AT THE END OF EACH DAY.
3. SEDIMENT SHALL BE REMOVED FROM PUBLIC ROADS BY SHOVELING OR SWEEPING AND DISPOSED OR PROPERLY IN A CONTROLLED SEDIMENT DISPOSAL AREA.

SITE GRADING NOTES

1. PRIOR TO THE COMMENCEMENT OF THE SITE GRADING WORKS, ALL SILTATION CONTROL DEVICES SHALL BE INSTALLED AND OPERATIONAL PER EROSION CONTROL PLAN.
2. ALL GRANULAR AND PAVEMENT FOR ROADS/PARKING AREAS SHALL BE CONSTRUCTED IN ACCORDANCE WITH GEOTECHNICAL ENGINEER'S RECOMMENDATIONS.
3. ALL TOPSOIL AND ORGANIC MATERIAL SHALL BE STRIPPED WITHIN THE ROAD AND PARKING AREAS ALLOWANCE PRIOR TO THE COMMENCEMENT OF CONSTRUCTION.
4. CONCRETE CURB SHALL BE IN ACCORDANCE WITH THE CITY OF OTTAWA STD. SC1.1 PROVISION SHALL BE MADE OR CURB DEPRESSIONS AS INDICATED ON ARCHITECTURAL SITE PLAN. CONCRETE SIDEWALK SHALL BE IN ACCORDANCE WITH CITY OF OTTAWA STD SC1.4. ALL CURBS, CONCRETE ISLANDS, AND SIDEWALKS SHOWN O THIS DRAWING ARE TO BR PRICED IN SITE WORKS PORTION OF THE CONTRACT.
5. PAVEMENT REINSTATEMENT FOR SERVICE AND UTILITY CUTS SHALL BE IN ACCORDANCE WITH THE CITY OF OTTAWA STD. R10 AND OPSD 509.010 AND OPSS 310.
6. GRANULAR 'A' SHALL BE PLACED TO A MINIMUM THICKNESS OF 30MM AROUND ALL STRUCTURES WITHIN THE PAVEMENT AREA.
7. SUB-EXCAVATE SOFT AREAS AND FILL WITH GRANULAR 'B' COMPACTED IN MAXIMUM 30MM LIFTS.
8. ALL WORK ON THE MUNICIPAL RIGHT OF WAY AND EASEMENTS TO BE INSPECTED BY THE MUNICIPALITY PRIOR BACKFILLING.
9. CONTRACTOR TO OBTAIN A ROAD OCCUPANCY PERMIT 48 HOURS PRIOR TO COMMENCING ANY WORK WITHIN THE MUNICIPAL ROAD ALLOWANCE, IF REQUIRED BY THE CITY.
10. ALL PAVEMENT MARKING FEATURES AND SITE SIGNAGE SHALL BE PLACED PER ARCHITECTURAL SITE PLAN. LINE PAINTING AND DIRECTIONAL SYMBOLS SHALL BE APPLIED WITH A MINIMUM OF TWO COATS OF ORGANIC SOLVENT PAINT.
11. REFER TO ARCHITECTURAL SITE PLAN FOR DIMENSIONS AND SITE DETAILS.
12. STEP JOINTS ARE TO BE USED WHERE PROPOSED ASPHALT MEETS EXISTING ASPHALT. ALL JOINTS MUST BE SEALED.
13. SIDEWALKS TO BE 13MM & BEVELED AT 2:1 OR 6MM WITH NO BEVEL REQUIRED BELOW THE FINISHED FLOOR SLAB ELEVATION AT ENTRANCES REQUIRED TO BE BARRIER-FREE, UNLESS OTHERWISE NOTED. ALL IN ACCORDANCE WITH OBC 3.8.1.3 & OTTAWA ACCESSIBILITY DESIGN STANDARDS.
14. WHERE APPLICABLE THE CONTRACTOR IS TO SUBMIT SHOP DRAWINGS TO THE ENGINEER FOR APPROVAL PRIOR TO CONSTRUCTION. SHOP DRAWINGS MUST BE SITE SPECIFIC, SIGNED AND SEALED BY A LICENSED STRUCTURAL ENGINEER. THE CONTRACTOR WILL ALSO BE REQUIRED TO SUPPLY AND GEOTECHNICAL CERTIFICATION OF THE AS-CONSTRUCTED RETAINING WALL TO THE ENGINEER PRIOR TO FINAL ACCEPTANCE.

ROADWORK SPECIFICATIONS

15. ROADWORK TO BE COMPLETED IN ACCORDANCE WITH GEOTECHNICAL REPORT, PREPARED BY PATERSON, DATED NOVEMBER 3rd, 2025..
16. AL TOPSOIL AND ORGANIC MATERIAL SHALL BE STRIPPED WITHIN THE ROAD ALLOWANCE PRIOR TO THE COMMENCEMENT OF CONSTRUCTION AND STOCK PILLED ON SITE AS DIRECTED BY LOCAL AUTHORITY.
17. THE SUBGRADE SHALL BE CROWNED AND SLOPED AT LEAST 2% AND PROOF ROLLED WITH HEAVY ROLLERS.
18. SUB-EXCAVATE SOFT AREAS AND FILL WITH GRANULAR 'A', TYPE II COMPACTED IN MAXIMUM 300MM LIFTS.
19. ALL GRANULAR FOR ROADS SHALL BE COMPACTED TO MINIMUM OF 100% STANDARD PROCTOR DENSITY MAXIMUM DRY DENSITY (SPMDD).
20. CONCRETE RAMP C/W TACTILE WALKING SURFACE INDICATORS COMPONENT AS PER OPSD 310.039. TACTILE WALKING SURFACE INDICATORS TO BE INSTALLED AT ALL RAMPS. MATERIAL TO BE POLYMER COMPOSITE, COLOR GREY.

SANITARY, FOUNDATION DRAIN, STORM SEWER AND WATERMAIN NOTES

GENERAL

1. LASER ALIGNMENT CONTROL TO BE UTILIZED ON ALL SEWER INSTALLATIONS.
2. CLAY SEALS TO BE INSTALLED AS PER CITY STANDARD DRAWING S8. THE SEALS SHOULD BE AT LEAST 1.5M LONG (IN THE TRENCH DIRECTION) AND SHOULD EXTEND FROM TRENCH WALL TO TRENCH WALL. THE SEALS SHOULD EXTEND FROM THE FROST LINE AND FULLY PENETRATE THE BEDDING, SUB-BEDDING, AND COVER MATERIAL. THE BARRIERS SHOULD CONSIST OF RELATIVELY DRY AND COMPATIBLE BROWN SILTY CLAY PLACED IN MAXIMUM 225MM LIFTS AND COMPACTED TO A MINIMUM OF 95% SPMDD. THE CLAY SEALS SHOULD BE PLACED AT THE SITE BOUNDARIES AND AT 60M INTERVALS IN THE SERVICE TRENCHES.
3. SERVICES TO BUILDING TO BE TERMINATED 1.0M FROM THE OUTSIDE FACE OF BUILDING UNLESS OTHERWISE NOTED.
4. ALL MAINTENANCE STRUCTURE AND CATCH BASIN EXCAVATIONS TO BE BACKFILLED WITH GRANULAR MATERIAL COMPACTED TO 98% STANDARD PROCTOR DENSITY. A MINIMUM OF 300MM AROUND STRUCTURES.
5. "MODULOC" OR APPROVED PRE-CAST MAINTENANCE STRUCTURE AND CATCH BASIN ADJUSTERS TO BE USED IN LIEU OF BRICKING. PARGE ADJUSTING UNITS ON THE OUTSIDE ONLY.
6. SAFETY PLATFORMS SHALL BE PER OPSD 404.02.
7. DROP STRUCTURES SHALL BE IN ACCORDANCE WITH OPSD 1003.01, IF APPLICABLE.
8. THE CONTRACTOR IS TO PROVIDE CCTV CAMERA INSPECTIONS OF ALL SEWERS, INCLUDING PICTORIAL REPORT, ONE (1) CD COPY AND TWO (2) VIDEO RECORDING IN A FORMAT ACCEPTABLE TO ENGINEER. ALL SEWER ARE TO BE FLUSHED PRIOR TO CAMERA INSPECTION. ASPHALT WEAR COURSE SHALL NOT BE PLACED UNTIL THE VIDEO INSPECTION OF SEWERS AND NECESSARY REPAIRS HAVE BEEN COMPLETED TO THE SATISFACTION OF THE ENGINEER.
9. CONTRACTOR SHALL PERFORM LEAKAGE TESTING, IN THE PRESENCE OF THE CONSULTANT, FOR SANITARY SEWERS IN ACCORDANCE WITH OPSS 407. CONTRACTOR SHALL PERFORM VIDEO INSPECTION OF ALL SEWERS. A COPY OF THE VIDEO AND INSPECTION REPORT SHALL BE SUBMITTED TO THE CONSULTANT FOR REVIEW AND APPROVAL PRIOR TO PLACEMENT OF WEAR COURSE ASPHALT.

SANITARY

10. ALL SANITARY SEWER INSTALLATION SHALL CONFORM TO THE LATEST REVISIONS OF THE CITY OF OTTAWA AND THE ONTARIO PROVINCIAL STANDARD DRAWINGS (OPSD). AND SPECIFICATIONS (OPSS).
11. ALL SANITARY GRAVITY SEWER SHALL BE PVC SDR 35, IPEX 'RING-TITE' (OR APPROVED EQUIVALENT) PER CSA STANDARD B182.2 OR LATEST AMENDMENT, UNLESS SPECIFIED OTHERWISE.
12. EXISTING MAINTENANCE STRUCTURES TO BE RE-BENCHED WHERE A NEW CONNECTION IS MADE.
13. SANITARY GRAVITY SEWER TRENCH AND BEDDING SHALL BE PER CITY OF OTTAWA STD. S6 AND S7 CLASS 'B' BEDDING, UNLESS SPECIFIED OTHERWISE.
14. SANITARY MAINTENANCE STRUCTURE FRAME AND COVERS SHALL BE PER CITY OF OTTAWA STD. S24 AND S25.
15. SANITARY MAINTENANCE STRUCTURES SHALL BE BENCHED PER OPSD 701.021.
16. 100MM THICK HIGH-DENSITY GRADE 'A' POLYSTYRENE INSULATION TO BE INSTALLED IN ACCORDANCE WITH CITY STD W22 WHERE INDICATED ON DRAWING SSP-1.

STORM

17. ALL REINFORCED CONCRETE STORM SEWER PIPE SHALL BE IN ACCORDANCE WITH CSA A257.2, OR LATEST AMENDMENT. ALL NON-REINFORCED CONCRETE STORM SEWER PIPE SHALL BE IN ACCORDANCE WITH CSA A257.1, OR LATEST AMENDMENT. PIPE SHALL BE JOINED WITH STD. RUBBER GASKETS AS PER CSA A257.3, OR LATEST AMENDMENT.
18. ALL STORM SEWER TRENCH AND BEDDING SHALL BE IN ACCORDANCE WITH THE CITY OF OTTAWA STD. S6 AND S7 CLASS 'B' UNLESS OTHERWISE SPECIFIED. BEDDING AND COVER MATERIAL SHALL BE SPECIFIED BY PROJECT GEOTECHNICAL ENGINEER.
19. ALL PVC STORM SEWERS ARE TO BE SDR 35 APPROVED PER C.S.A. B182.2 OR LATEST AMENDMENT, UNLESS OTHERWISE SPECIFIED.
20. CATCH BASIN SHALL BE IN ACCORDANCE WITH OPSD 705.010.
21. CATCH BASIN LEADS SHALL BE IN 200MM DIA. AT 1% SLOPE (MIN) UNLESS SPECIFIED OTHERWISE.
22. ALL CATCH BASINS SHALL HAVE 600MM SUMPS, UNLESS SPECIFIED OTHERWISE.
23. ALL CATCH BASIN LEAD INVERTS TO BE 1.5M BELOW FINISHED GRADE UNLESS SPECIFIED OTHERWISE.
24. THE STORM SEWER CLASSES HAVE BEEN DESIGNED BASED ON BEDDING CONDITIONS SPECIFIED ABOVE. WHERE THE SPECIFIED TRENCH WIDTH IS EXCEEDED, THE CONTRACTOR IS REQUIRED TO PROVIDE AND SHALL BE RESPONSIBLE FOR EXTRA TEMPORARY AND/OR PERMANENT REPAIRS MADE NECESSARY BY THE WIDENED TRENCH.
25. ALL ROAD AND PARKING LOT CATCH BASINS TO BE INSTALLED WITH ORTHOGONALLY PLACED SUBDRAINS IN ACCORDANCE WITH DETAIL. PERFORATED SUBDRAIN FOR ROAD AND PARKING LOT CATCH BASIN SHALL BE INSTALLED PER CITY STD R1 UNLESS OTHERWISE NOTED.
26. PERFORATED SUBDRAIN FOR REAR YARD AND LANDSCAPING APPLICATIONS SHALL BE INSTALLED PER CITY STD S29, S30 AND S31, WHERE APPLICABLE.
27. RIP-RAP TREATMENT SEWER AND CULVERT OUTLETS PER OPSD 810.010.
28. ALL STORM SEWER/ CULVERTS TO BE INSTALLED WITH FROST TREATMENT PER OPSD 803.031 WHERE APPLICABLE.
29. ALL STORM MANHOLES WITH PIPE LESS THAN 900MM IN DIAMETER SHALL BE CONSTRUCTED WITH A 300MM SUMP AS PER SDG, CLAUSE 6.2.6.

WATERMAIN

30. ALL WATERMAIN INSTALLATION SHALL CONFORM TO THE LATEST REVISIONS OF THE CITY OF OTTAWA AND THE ONTARIO PROVINCIAL STANDARD DRAWINGS (OPSD) AND SPECIFICATIONS (OPSS).
31. ALL PVC WATERMAINS SHALL BE AWWA C-900 CLASS 150, SDR 18 OR APPROVED EQUIVALENT.
32. ALL WATER SERVICES LESS THAN OR EQUAL TO 50MM IN DIAMETER TO BE TYPE 'K' COPPER.
33. WATERMAIN TRENCH AND BEDDING SHALL BE IN ACCORDANCE WITH CITY OF OTTAWA STANDARD W17. UNLESS SPECIFIED OTHERWISE. BEDDING AND COVER MATERIAL SHALL BE SPECIFIED BY THE PROJECT GEOTECHNICAL ENGINEER.
34. ALL PVC WATERMAINS, SHALL BE INSTALLED WITH A 10 GAUGE STRANDED COPPER TWU OR RWU TRACER WIRE IN ACCORDANCE WITH CITY OF OTTAWA STD. W.36.
35. CATHODIC PROTECTION IS REQUIRED ON ALL METALLIC FITTINGS PER CITY OF OTTAWA STD.25.5 AND W25.6.
36. VALVE BOXES SHALL BE INSTALLED PER CITY OF OTTAWA STD W24.
37. WATERMAIN IN FILL AREAS TO BE INSTALLED WITH RESTRAINED JOINTS PER CITY OF OTTAWA STD.25.5 AND W25.6.
38. THRUST BLOCKING OF WATERMAINS TO BE INSTALLED PER CITY OF OTTAWA STD. W25.3 AND W25.4.
39. THE CONTRACTOR SHALL PROVIDE ALL TEMPORARY CAPS, PLUGS, BLOW-OFFS, AND NOZZLES REQUIRED FOR TESTING AND DISINFECTION OF THE WATERMAIN.
40. WATERMAIN CROSSING OVER AND BELOW SEWERS SHALL BE IN ACCORDANCE WITH THE CITY OF OTTAWA STD. W25,2 AND W25, RESPECTIVELY.
41. WATER SERVICES ARE TO BE INSULATED PER CITY STD. W23 WHERE SEPARATION BETWEEN SERVICES AND MAINTENANCE HOLES ARE LESS THAN 2.4M.
42. THE MINIMUM VERTICAL CLEARANCE BETWEEN WATERMAIN AND SEWER/UTILITY IS 0.5M PER MOE GUIDELINES. FOR CROSSING UNDER SEWERS, ADEQUATE STRUCTURAL SUPPORT FOR THE SEWER IS REQUIRED TO PREVENT EXCESSIVE DEFLECTION OF JOINTS AND SETTLING. THE LENGTH OF WATER PIPE SHALL BE CENTERED AT THE POINT OF CROSSING TO ENSURE THAT THE JOINTS WILL BE EQUIDISTANT AND AS FAR AS POSSIBLE FROM THE SEWER.
43. ALL WATERMAINS SHALL HAVE A MINIMUM COVER OR 2.4M, OTHERWISE THERMAL INSULATION IS REQUIRED AS PER STD DWG W22.
44. GENERAL WATER PLANT TO UTILITY CLEARANCE AS PER STD DWG R20.
45. BUILDING SERVICE TO BE CAPPED 1.0M OFF THE FACE OF THE BUILDING UNLESS OTHERWISE NOTED AND MUST BE RESTRAINED A MINIMUM OF 12M BACK FROM STUB.
46. ALL WATERMAINS SHALL BE HYDROSTATICALLY TESTED IN ACCORDANCE WITH THE CITY OF OTTAWA AND ONTARIO GUIDELINES UNLESS OTHERWISE DIRECTED. PROVISIONS FOR FLUSHING WATER LINE PRIOR TO TESTING, ETC. MUST BE PROVIDED.
47. ALL WATERMAINS SHALL BE BACTERIOLOGICALLY TESTED IN ACCORDANCE WITH THE CITY OF OTTAWA AND ONTARIO GUIDELINES. ALL CHLORINATED WATER TO BE DISCHARGED AND PRETREATED TO ACCEPTABLE LEVELS PRIOR TO DISCHARGE. ALL DISCHARGED WATER MUST BE CONTROLLED AND TREATED SO AS NOT TO ADVERSELY EFFECT ENVIRONMENT. IT IS RESPONSIBILITY OF THE CONTRACTOR TO ENSURE THAT ALL MUNICIPAL AND/OR PROVINCIAL REQUIREMENTS ARE FOLLOWED.
48. ALL WATERMAIN STUBS SHALL BE TERMINATED WITH A PLUG AND 50MM BLOW OFF UNLESS OTHERWISE NOTED.

USE AND INTERPRETATION OF DRAWINGS

GENERAL CONDITIONS OF THE CONTRACT FOR CONSTRUCTION ARE PART OF THE CONTRACT DOCUMENTS AND DESCRIBE USE AND INTENT OF THE DRAWING. THE CONTRACT DOCUMENTS INCLUDE NOT ONLY THE DRAWINGS, BUT ALSO THE OWNER-CONTRACTOR AGREEMENTS, CONDITIONS OF THE CONTRACT, THE SPECIFICATIONS, ADDENDA, AND MODIFICATIONS ISSUED AFTER EXECUTION OF THE CONTRACT. THESE CONTRACT DOCUMENTS ARE COMPLEMENTARY, AND WHAT IS REQUIRED BY ANY ONE SHALL BE BINDING AS IF REQUIRED BY ALL. WORK NOT COMPLETELY DELINEATED HEREON SHALL BE CONSTRUCTED OF THE SAME MATERIALS AND DETAILED SIMILARLY AS WORK SHOWN MORE COMPLETELY ELSEWHERE IN THE CONTRACT DOCUMENTS.

BY USE OF THE DRAWINGS FOR CONSTRUCTION OF THE PROJECT, THE OWNER CONFIRMS THAT HE HAS REVIEWED AND APPROVED THE DRAWINGS. THE CONTRACTOR CONFIRMS THAT HE HAS VISITED THE SITE, FAMILIARIZED HIMSELF WITH THE LOCAL CONDITIONS, VERIFIED FIELD DIMENSIONS AND CORRELATED HIS OBSERVATIONS WITH THE REQUIREMENTS OF THE CONTRACT DOCUMENTS.

AS INSTRUMENTS OF SERVICE, ALL DRAWINGS, SPECIFICATIONS, CADD FILES OR OTHER ELECTRONIC MEDIA AND COPIED THERE OF FURNISHED BY THE ENGINEER ARE HIS PROPERTY. THEY ARE TO BE USED ONLY FOR THIS PROJECT AND ARE NOT TO BE USED ON ANY OTHER PROJECT, INCLUDING REPEATS OF THE PROJECT. CHANGES TO THE DRAWINGS MAY ONLY BE MADE BY THE ENGINEER.

UNLESS THE REVISION TITLE IS "ISSUED FOR CONSTRUCTION", THESE DRAWINGS SHALL BE CONSIDERED PRELIMINARY AND SHALL NOT BE USED AS A CONSTRUCTION DOCUMENT.

THESE DRAWINGS ILLUSTRATES THE WORK TO BE DONE. THE ENGINEER IS NOT RESPONSIBLE FOR THE MEANS, METHODS, TECHNIQUES, SEQUENCES, AND PROCEDURES USED TO DO THE WORK, OR THE SAFETY ASPECTS OF CONSTRUCTION, AND NOTHING ON THESE DRAWINGS EXPRESSED OR IMPLIED CHANGES THIS CONDITION. CONTRACTOR SHALL DETERMINE ALL CONDITIONS AT THE SITE AND SHALL BE RESPONSIBLE FOR KNOWING HOW THEY AFFECT THE WORK. SUBMITTAL OF A BID TO PERFORM THIS WORK IS ACKNOWLEDGEMENT OF THE RESPONSIBILITIES, AND THAT THEY HAVE BEEN FULLY CONSIDERED IN PLANNING OF THE WORK, AND THE BID PRICE. NO CLAIMS FOR EXTRA CHARGES DUE TO THESE CONDITIONS WILL BE FORTHCOMING.

UNAUTHORIZED CHANGES:

IN THE EVENT THE CLIENT, THE CLIENT'S CONTRACTORS OR SUBCONTRACTORS, OR ANYONE FOR WHOM THE CLIENT IS LEGALLY LIABLE MAKES OR PERMITS TO BE MADE ANY CHANGES TO ANY REPORTS, PLANS, SPECIFICATIONS OR OTHER CONSTRUCTION DOCUMENTS PREPARED BY LRL ASSOCIATES LTD. (LRL) WITHOUT OBTAINING LRL'S PRIOR WRITTEN CONSENT, THE CLIENT SHALL ASSUME FULL RESPONSIBILITY FOR THE RESULTS OF SUCH CHANGES. THEREFORE THE CLIENT AGREES TO WAIVE ANY CLAIM AGAINST LRL AND TO RELEASE LRL FROM ANY LIABILITY ARISING DIRECTLY OR INDIRECTLY FROM SUCH UNAUTHORIZED CHANGES.

IN ADDITION, THE CLIENT AGREES, TO THE FULLEST EXTENT PERMITTED BY LAW, TO INDEMNIFY AND HOLD HARMLESS LRL FROM ANY DAMAGES, LIABILITIES OR COST, INCLUDING REASONABLE ATTORNEY'S FEES AND COST OF DEFENSE, ARISING FROM SUCH CHANGES.

IN ADDITION, THE CLIENT AGREES TO INCLUDE IN ANY CONTRACTS FOR CONSTRUCTION APPROPRIATE LANGUAGE THAT PROHIBITS THE CONTRACTOR OR ANY SUBCONTRACTORS OF ANY TIER FROM MAKING ANY CHANGES OR MODIFICATIONS TO LRL'S CONSTRUCTION DOCUMENTS WITHOUT THE PRIOR WRITTEN APPROVAL OF LRL AND THAT FURTHER REQUIRES THE CONTRACTOR TO INDEMNIFY BOTH LRL AND THE CLIENT FROM ANY LIABILITY OR COST ARISING FROM SUCH CHANGES MADE WITHOUT SUCH PROPER AUTHORIZATION.

GENERAL NOTES:

EXISTING SERVICES AND UTILITIES SHOWN ON THESE DRAWINGS ARE TAKEN FROM THE BEST AVAILABLE RECORDS, BUT MAY NOT BE COMPLETE OR TO DATE. CONTRACTOR SHALL VERIFY IN FIELD FOR LOCATION AND ELEVATION OF PIPES AND CHECK WITH THE UTILITY COMPANIES BEFORE DIGGING OR PERFORMING WORK.

CONTRACTOR IS ADVISED TO COLLECT INFORMATION ON SOIL CONDITIONS BEFORE START OF CONSTRUCTION.

THE ENGINEER WAIVES ANY AND ALL RESPONSIBILITY AND LIABILITY FOR PROBLEMS WHICH ARISE FROM FAILURE TO FOLLOW THESE PLANS, SPECIFICATIONS AND THE DESIGN INTENT THEY CONVEY, OR FOR PROBLEMS WHICH ARISE FROM OTHERS' FAILURE TO OBTAIN AND/OR FOLLOW THE ENGINEER'S GUIDANCE WITH RESPECT TO ANY ERRORS, OMISSIONS, INCONSISTENCIES AMBIGUITIES OR CONFLICTS WHICH ARE ALLEGED.

CONTRACTOR TO VERIFY ALL DIMENSIONS AND NOTIFY THE ENGINEER OF ANY DISCREPANCIES BEFORE WORK COMMENCES. DO NOT SCALE DRAWINGS.

SUBJECT TO APPROVAL

No.	REVISIONS	BY	DATE
04	ISSUED FOR APPROVAL	M.L.	26 JAN 2026
03	ISSUED FOR APPROVAL	M.L.	26 NOV 2025
02	ISSUED FOR APPROVAL	M.L.	03 NOV 2025
01	ISSUED FOR APPROVAL	M.L.	21 AUG 2025

LICENSED PROFESSIONAL ENGINEER
M. BASNET
100501996
Jan 26/26
PROVINCE OF ONTARIO

NOT AUTHENTIC UNLESS SIGNED AND DATED

LRL
ENGINEERING | INGÉNIERIE
5430 Canotek Road | Ottawa, ON, K1J 9G2
www.lrl.ca | (613) 842-3434

CLIENT
SCALIA

DESIGNED BY:	DRAWN BY:	APPROVED BY:
M.L.	M.L.	M.B.

PROJECT
MIXED USE APARTMENT DEVELOPMENT
6310 HAZELDEAN ROAD
OTTAWA, ON

DRAWING TITLE
GENERAL NOTES

PROJECT NO.
220027
C001

D07-12-25-0121

19408

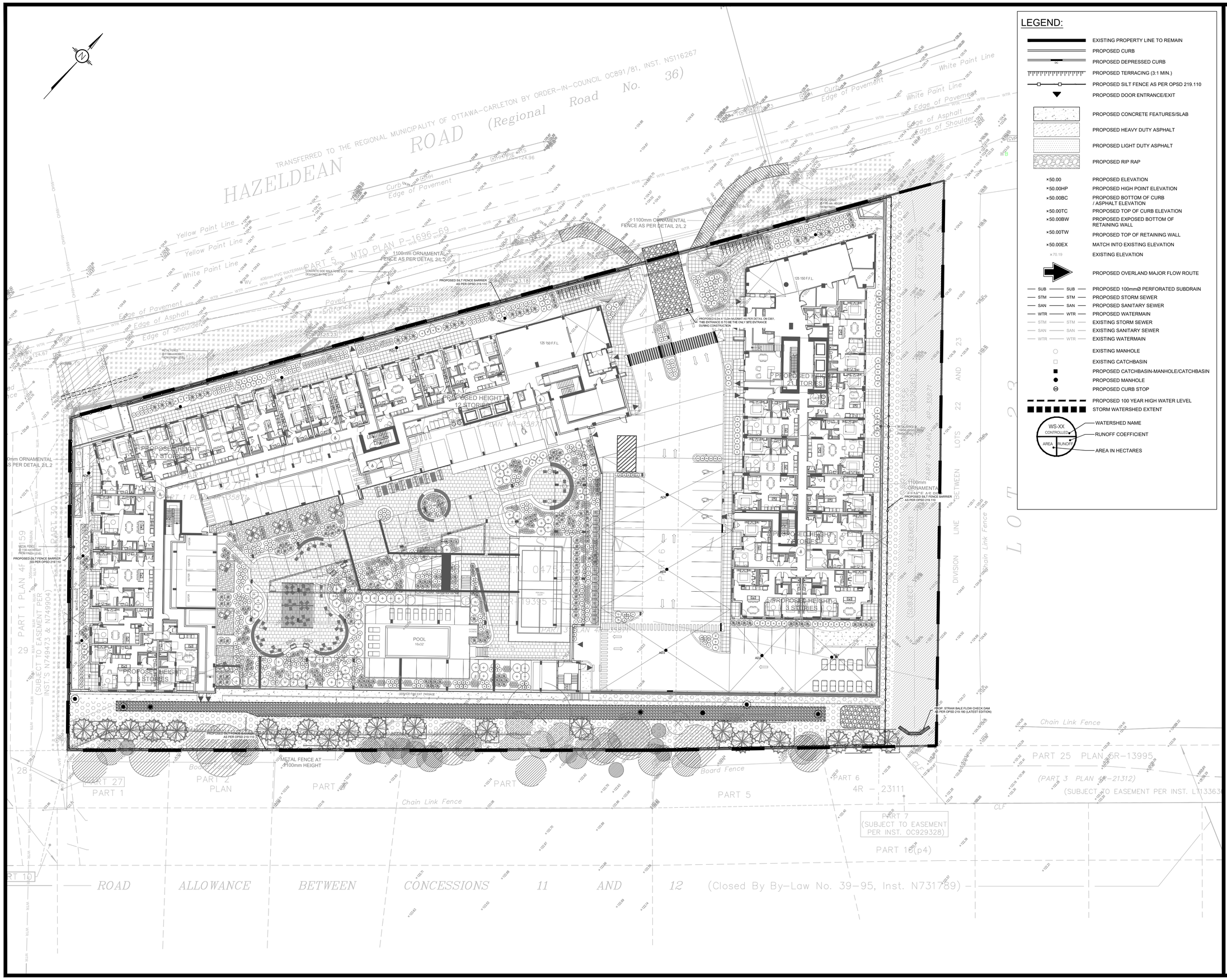

LEGEND:

- EXISTING PROPERTY LINE TO REMAIN
- PROPOSED CURB
- PROPOSED DEPRESSED CURB
- PROPOSED TERRACING (3:1 MIN.)
- PROPOSED SILT FENCE AS PER OPSD 219.110
- PROPOSED DOOR ENTRANCE/EXIT
- PROPOSED CONCRETE FEATURES/SLAB
- PROPOSED HEAVY DUTY ASPHALT
- PROPOSED LIGHT DUTY ASPHALT
- PROPOSED RIP RAP
- ×50.00 — PROPOSED ELEVATION
- ×50.00HP — PROPOSED HIGH POINT ELEVATION
- ×50.00BC — PROPOSED BOTTOM OF CURB / ASPHALT ELEVATION
- ×50.00TC — PROPOSED TOP OF CURB ELEVATION
- ×50.00BW — PROPOSED EXPOSED BOTTOM OF RETAINING WALL
- ×50.00TW — PROPOSED TOP OF RETAINING WALL
- ×50.00EX — MATCH INTO EXISTING ELEVATION
- ×70.19 — EXISTING ELEVATION
- PROPOSED OVERLAND MAJOR FLOW ROUTE
- SUB — SUB — PROPOSED 100mmØ PERFORATED SUBDRAIN
- STM — STM — PROPOSED STORM SEWER
- SAN — SAN — PROPOSED SANITARY SEWER
- WTR — WTR — PROPOSED WATERMAIN
- STM — STM — EXISTING STORM SEWER
- SAN — SAN — EXISTING SANITARY SEWER
- WTR — WTR — EXISTING WATERMAIN
- EXISTING MANHOLE
- EXISTING CATCHBASIN
- PROPOSED CATCHBASIN-MANHOLE/CATCHBASIN
- PROPOSED MANHOLE
- PROPOSED CURB STOP
- PROPOSED 100 YEAR HIGH WATER LEVEL
- STORM WATERSHED EXTENT
- WS-XX — WATERSHED NAME
- CONTROLLED — RUNOFF COEFFICIENT
- AREA — AREA IN HECTARES

USE AND INTERPRETATION OF DRAWINGS

GENERAL CONDITIONS OF THE CONTRACT FOR CONSTRUCTION ARE PART OF THE CONTRACT DOCUMENTS AND DESCRIBE USE AND INTENT OF THE DRAWING. THE CONTRACT DOCUMENTS INCLUDE NOT ONLY THE DRAWINGS, BUT ALSO THE OWNER-CONTRACTOR AGREEMENTS, CONDITIONS OF THE CONTRACT, THE SPECIFICATIONS, ADDENDA, AND MODIFICATIONS ISSUED AFTER EXECUTION OF THE CONTRACT. THESE CONTRACT DOCUMENTS ARE COMPLEMENTARY, AND WHAT IS REQUIRED BY ANY ONE SHALL BE BINDING AS IF REQUIRED BY ALL. WORK NOT COMPLETELY DELINEATED HEREON SHALL BE CONSTRUCTED OF THE SAME MATERIALS AND DETAILED SIMILARLY AS WORK SHOWN MORE COMPLETELY ELSEWHERE IN THE CONTRACT DOCUMENTS.

BY USE OF THE DRAWINGS FOR CONSTRUCTION OF THE PROJECT, THE OWNER CONFIRMS THAT HE HAS REVIEWED AND APPROVED THE DRAWINGS. THE CONTRACTOR CONFIRMS THAT HE HAS VISITED THE SITE, FAMILIARIZED HIMSELF WITH THE LOCAL CONDITIONS, VERIFIED FIELD DIMENSIONS AND CORRELATED HIS OBSERVATIONS WITH THE REQUIREMENTS OF THE CONTRACT DOCUMENTS.

AS INSTRUMENTS OF SERVICE, ALL DRAWINGS, SPECIFICATIONS, CADD FILES OR OTHER ELECTRONIC MEDIA AND COPIED THERE OF FURNISHED BY THE ENGINEER ARE HIS PROPERTY. THEY ARE TO BE USED ONLY FOR THIS PROJECT AND ARE NOT TO BE USED ON ANY OTHER PROJECT, INCLUDING REPEATS OF THE PROJECT. CHANGES TO THE DRAWINGS MAY ONLY BE MADE BY THE ENGINEER.

UNLESS THE REVISION TITLE IS "ISSUED FOR CONSTRUCTION", THESE DRAWINGS SHALL BE CONSIDERED PRELIMINARY AND SHALL NOT BE USED AS A CONSTRUCTION DOCUMENT.

THESE DRAWINGS ILLUSTRATES THE WORK TO BE DONE. THE ENGINEER IS NOT RESPONSIBLE FOR THE MEANS, METHODS, TECHNIQUES, SEQUENCES, AND PROCEDURES USED TO DO THE WORK, OR THE SAFETY ASPECTS OF CONSTRUCTION, AND NOTHING ON THESE DRAWINGS EXPRESSED OR IMPLIED CHANGES THIS CONDITION. CONTRACTOR SHALL DETERMINE ALL CONDITIONS AT THE SITE AND SHALL BE RESPONSIBLE FOR KNOWING HOW THEY AFFECT THE WORK. SUBMITTAL OF A BID TO PERFORM THIS WORK IS ACKNOWLEDGEMENT OF THE RESPONSIBILITIES, AND THAT THEY HAVE BEEN FULLY CONSIDERED IN PLANNING OF THE WORK, AND THE BID PRICE. NO CLAIMS FOR EXTRA CHARGES DUE TO THESE CONDITIONS WILL BE FORTHCOMING.

UNAUTHORIZED CHANGES:

IN THE EVENT THE CLIENT, THE CLIENT'S CONTRACTORS OR SUBCONTRACTORS, OR ANYONE FOR WHOM THE CLIENT IS LEGALLY LIABLE MAKES OR PERMITS TO BE MADE ANY CHANGES TO ANY REPORTS, PLANS, SPECIFICATIONS OR OTHER CONSTRUCTION DOCUMENTS PREPARED BY LRL ASSOCIATES LTD. (LRL) WITHOUT OBTAINING LRL'S PRIOR WRITTEN CONSENT, THE CLIENT SHALL ASSUME FULL RESPONSIBILITY FOR THE RESULTS OF SUCH CHANGES. THEREFORE THE CLIENT AGREES TO WAIVE ANY CLAIM AGAINST LRL AND TO RELEASE LRL FROM ANY LIABILITY ARISING DIRECTLY OR INDIRECTLY FROM SUCH UNAUTHORIZED CHANGES.

IN ADDITION, THE CLIENT AGREES, TO THE FULLEST EXTENT PERMITTED BY LAW, TO INDEMNIFY AND HOLD HARMLESS LRL FROM ANY DAMAGES, LIABILITIES OR COST, INCLUDING REASONABLE ATTORNEY'S FEES AND COST OF DEFENSE, ARISING FROM SUCH CHANGES.

IN ADDITION, THE CLIENT AGREES TO INCLUDE IN ANY CONTRACTS FOR CONSTRUCTION APPROPRIATE LANGUAGE THAT PROHIBITS THE CONTRACTOR OR ANY SUBCONTRACTORS OF ANY TIER FROM MAKING ANY CHANGES OR MODIFICATIONS TO LRL'S CONSTRUCTION DOCUMENTS WITHOUT THE PRIOR WRITTEN APPROVAL OF LRL AND THAT FURTHER REQUIRES THE CONTRACTOR TO INDEMNIFY BOTH LRL AND THE CLIENT FROM ANY LIABILITY OR COST ARISING FROM SUCH CHANGES MADE WITHOUT SUCH PROPER AUTHORIZATION.

GENERAL NOTES:

EXISTING SERVICES AND UTILITIES SHOWN ON THESE DRAWINGS ARE TAKEN FROM THE BEST AVAILABLE RECORDS, BUT MAY NOT BE COMPLETE OR TO DATE. CONTRACTOR SHALL VERIFY IN FIELD FOR LOCATION AND ELEVATION OF PIPES AND CHECK WITH THE UTILITY COMPANIES BEFORE DIGGING OR PERFORMING WORK.

CONTRACTOR IS ADVISED TO COLLECT INFORMATION ON SOIL CONDITIONS BEFORE START OF CONSTRUCTION.

THE ENGINEER WAIVES ANY AND ALL RESPONSIBILITY AND LIABILITY FOR PROBLEMS WHICH ARISE FROM FAILURE TO FOLLOW THESE PLANS, SPECIFICATIONS AND THE DESIGN INTENT THEY CONVEY, OR FOR PROBLEMS WHICH ARISE FROM OTHERS' FAILURE TO OBTAIN AND/OR FOLLOW THE ENGINEER'S GUIDANCE WITH RESPECT TO ANY ERRORS, OMISSIONS, INCONSISTENCIES AMBIGUITIES OR CONFLICTS WHICH ARE ALLEGED.

CONTRACTOR TO VERIFY ALL DIMENSIONS AND NOTIFY THE ENGINEER OF ANY DISCREPANCIES BEFORE WORK COMMENCES. DO NOT SCALE DRAWINGS.

5m 2 0 5 10m

SCALE: 1:300

SUBJECT TO APPROVAL

No.	REVISIONS	BY	DATE
04	ISSUED FOR APPROVAL	M.L.	26 JAN 2026
03	ISSUED FOR APPROVAL	M.L.	26 NOV 2025
02	ISSUED FOR APPROVAL	M.L.	03 NOV 2025
01	ISSUED FOR APPROVAL	M.L.	21 AUG 2025

LICENSED PROFESSIONAL ENGINEER M. BASNET 100501996 PROVINCE OF ONTARIO

NOT AUTHENTIC UNLESS SIGNED AND DATED

LRL
ENGINEERING | INGÉNIERIE
5430 Canotek Road I Ottawa, ON, K1J 9G2
www.lrl.ca I (613) 842-3434

CLIENT
SCALIA

DESIGNED BY:	DRAWN BY:	APPROVED BY:
M.L.	M.L.	M.B.

PROJECT
MIXED USE APARTMENT DEVELOPMENT
6310 HAZELDEAN ROAD
OTTAWA, ON

DRAWING TITLE
EROSION AND SEDIMENT CONTROL PLAN

PROJECT NO.
220027

C101

D07-12-25-0121

19408

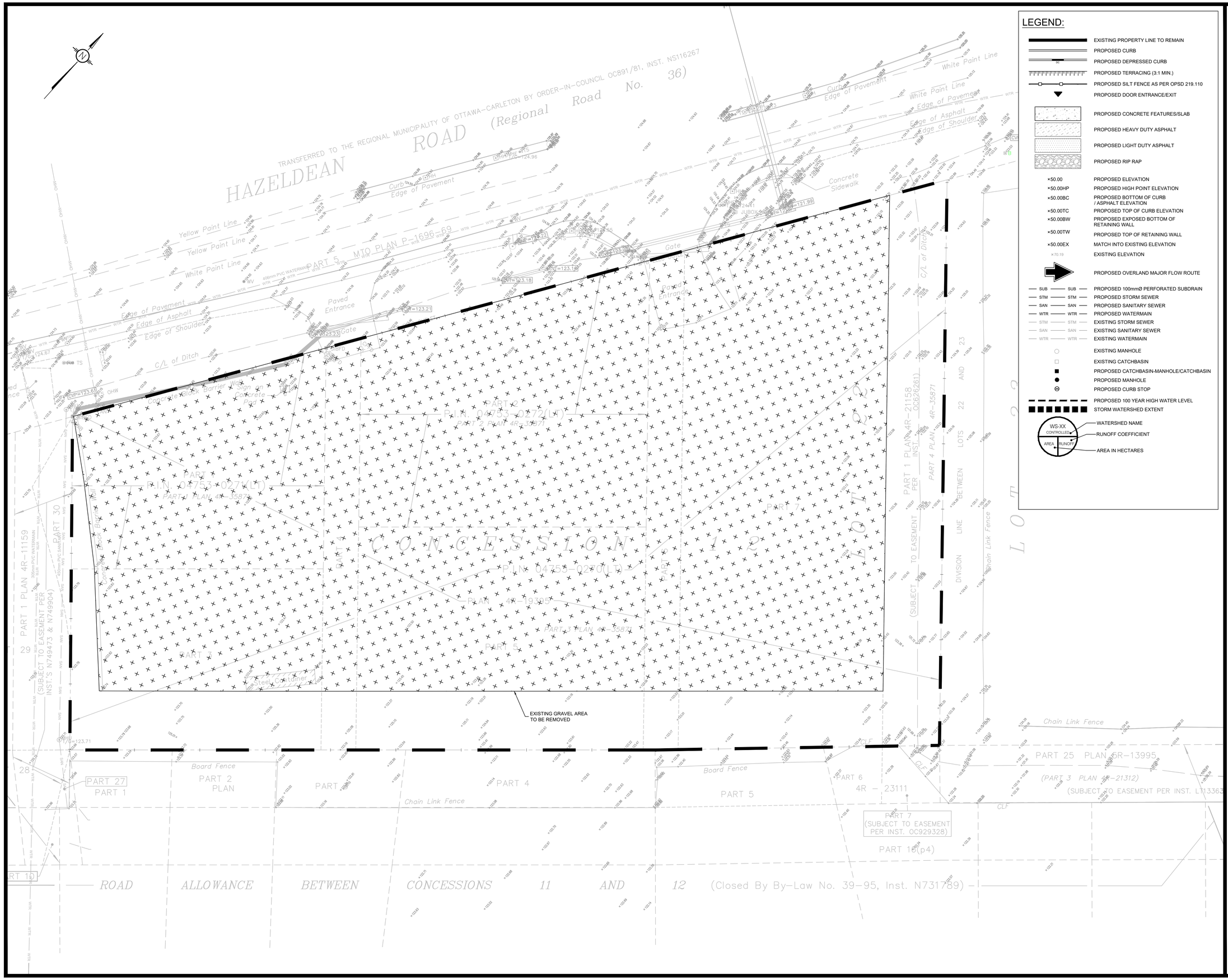

LEGEND:

- EXISTING PROPERTY LINE TO REMAIN
- PROPOSED CURB
- PROPOSED DEPRESSED CURB
- PROPOSED TERRACING (3:1 MIN.)
- PROPOSED SILT FENCE AS PER OPSD 219.110
- PROPOSED DOOR ENTRANCE/EXIT
- PROPOSED CONCRETE FEATURES/SLAB
- PROPOSED HEAVY DUTY ASPHALT
- PROPOSED LIGHT DUTY ASPHALT
- PROPOSED RIP RAP
- ×50.00 — PROPOSED ELEVATION
- ×50.00HP — PROPOSED HIGH POINT ELEVATION
- ×50.00BC — PROPOSED BOTTOM OF CURB / ASPHALT ELEVATION
- ×50.00TC — PROPOSED TOP OF CURB ELEVATION
- ×50.00BW — PROPOSED EXPOSED BOTTOM OF RETAINING WALL
- ×50.00TW — PROPOSED TOP OF RETAINING WALL
- ×50.00EX — MATCH INTO EXISTING ELEVATION
- ×70.19 — EXISTING ELEVATION
- PROPOSED OVERLAND MAJOR FLOW ROUTE
- SUB — PROPOSED 100mmØ PERFORATED SUBDRAIN
- STM — PROPOSED STORM SEWER
- SAN — PROPOSED SANITARY SEWER
- WTR — PROPOSED WATERMAIN
- STM — EXISTING STORM SEWER
- SAN — EXISTING SANITARY SEWER
- WTR — EXISTING WATERMAIN
- EXISTING MANHOLE
- EXISTING CATCHBASIN
- PROPOSED CATCHBASIN-MANHOLE/CATCHBASIN
- PROPOSED MANHOLE
- PROPOSED CURB STOP
- PROPOSED 100 YEAR HIGH WATER LEVEL
- STORM WATERSHED EXTENT
- WS-XX — WATERSHED NAME
- CONTROLLED — RUNOFF COEFFICIENT
- AREA, RUNOFF — AREA IN HECTARES

USE AND INTERPRETATION OF DRAWINGS

GENERAL CONDITIONS OF THE CONTRACT FOR CONSTRUCTION ARE PART OF THE CONTRACT DOCUMENTS AND DESCRIBE USE AND INTENT OF THE DRAWING. THE CONTRACT DOCUMENTS INCLUDE NOT ONLY THE DRAWINGS, BUT ALSO THE OWNER-CONTRACTOR AGREEMENTS, CONDITIONS OF THE CONTRACT, THE SPECIFICATIONS, ADDENDA, AND MODIFICATIONS ISSUED AFTER EXECUTION OF THE CONTRACT. THESE CONTRACT DOCUMENTS ARE COMPLEMENTARY, AND WHAT IS REQUIRED BY ANY ONE SHALL BE BINDING AS IF REQUIRED BY ALL. WORK NOT COMPLETELY DELINEATED HEREON SHALL BE CONSTRUCTED OF THE SAME MATERIALS AND DETAILED SIMILARLY AS WORK SHOWN MORE COMPLETELY ELSEWHERE IN THE CONTRACT DOCUMENTS.

BY USE OF THE DRAWINGS FOR CONSTRUCTION OF THE PROJECT, THE OWNER CONFIRMS THAT HE HAS REVIEWED AND APPROVED THE DRAWINGS. THE CONTRACTOR CONFIRMS THAT HE HAS VISITED THE SITE, FAMILIARIZED HIMSELF WITH THE LOCAL CONDITIONS, VERIFIED FIELD DIMENSIONS AND CORRELATED HIS OBSERVATIONS WITH THE REQUIREMENTS OF THE CONTRACT DOCUMENTS.

AS INSTRUMENTS OF SERVICE, ALL DRAWINGS, SPECIFICATIONS, CADD FILES OR OTHER ELECTRONIC MEDIA AND COPIED THERE OF FURNISHED BY THE ENGINEER ARE HIS PROPERTY. THEY ARE TO BE USED ONLY FOR THIS PROJECT AND ARE NOT TO BE USED ON ANY OTHER PROJECT, INCLUDING REPEATS OF THE PROJECT. CHANGES TO THE DRAWINGS MAY ONLY BE MADE BY THE ENGINEER.

UNLESS THE REVISION TITLE IS "ISSUED FOR CONSTRUCTION", THESE DRAWINGS SHALL BE CONSIDERED PRELIMINARY AND SHALL NOT BE USED AS A CONSTRUCTION DOCUMENT.

THESE DRAWINGS ILLUSTRATES THE WORK TO BE DONE. THE ENGINEER IS NOT RESPONSIBLE FOR THE MEANS, METHODS, TECHNIQUES, SEQUENCES, AND PROCEDURES USED TO DO THE WORK, OR THE SAFETY ASPECTS OF CONSTRUCTION, AND NOTHING ON THESE DRAWINGS EXPRESSED OR IMPLIED CHANGES THIS CONDITION. CONTRACTOR SHALL DETERMINE ALL CONDITIONS AT THE SITE AND SHALL BE RESPONSIBLE FOR KNOWING HOW THEY AFFECT THE WORK. SUBMITTAL OF A BID TO PERFORM THIS WORK IS ACKNOWLEDGEMENT OF THE RESPONSIBILITIES, AND THAT THEY HAVE BEEN FULLY CONSIDERED IN PLANNING OF THE WORK, AND THE BID PRICE. NO CLAIMS FOR EXTRA CHARGES DUE TO THESE CONDITIONS WILL BE FORTHCOMING.

UNAUTHORIZED CHANGES:

IN THE EVENT THE CLIENT, THE CLIENT'S CONTRACTORS OR SUBCONTRACTORS, OR ANYONE FOR WHOM THE CLIENT IS LEGALLY LIABLE MAKES OR PERMITS TO BE MADE ANY CHANGES TO ANY REPORTS, PLANS, SPECIFICATIONS OR OTHER CONSTRUCTION DOCUMENTS PREPARED BY LRL ASSOCIATES LTD. (LRL) WITHOUT OBTAINING LRL'S PRIOR WRITTEN CONSENT, THE CLIENT SHALL ASSUME FULL RESPONSIBILITY FOR THE RESULTS OF SUCH CHANGES. THEREFORE THE CLIENT AGREES TO WAIVE ANY CLAIM AGAINST LRL AND TO RELEASE LRL FROM ANY LIABILITY ARISING DIRECTLY OR INDIRECTLY FROM SUCH UNAUTHORIZED CHANGES.

IN ADDITION, THE CLIENT AGREES, TO THE FULLEST EXTENT PERMITTED BY LAW, TO INDEMNIFY AND HOLD HARMLESS LRL FROM ANY DAMAGES, LIABILITIES OR COST, INCLUDING REASONABLE ATTORNEY'S FEES AND COST OF DEFENSE, ARISING FROM SUCH CHANGES.

IN ADDITION, THE CLIENT AGREES TO INCLUDE IN ANY CONTRACTS FOR CONSTRUCTION APPROPRIATE LANGUAGE THAT PROHIBITS THE CONTRACTOR OR ANY SUBCONTRACTORS OF ANY TIER FROM MAKING ANY CHANGES OR MODIFICATIONS TO LRL'S CONSTRUCTION DOCUMENTS WITHOUT THE PRIOR WRITTEN APPROVAL OF LRL AND THAT FURTHER REQUIRES THE CONTRACTOR TO INDEMNIFY BOTH LRL AND THE CLIENT FROM ANY LIABILITY OR COST ARISING FROM SUCH CHANGES MADE WITHOUT SUCH PROPER AUTHORIZATION.

GENERAL NOTES:

EXISTING SERVICES AND UTILITIES SHOWN ON THESE DRAWINGS ARE TAKEN FROM THE BEST AVAILABLE RECORDS, BUT MAY NOT BE COMPLETE OR TO DATE. CONTRACTOR SHALL VERIFY IN FIELD FOR LOCATION AND ELEVATION OF PIPES AND CHECK WITH THE UTILITY COMPANIES BEFORE DIGGING OR PERFORMING WORK.

CONTRACTOR IS ADVISED TO COLLECT INFORMATION ON SOIL CONDITIONS BEFORE START OF CONSTRUCTION.

THE ENGINEER WAIVES ANY AND ALL RESPONSIBILITY AND LIABILITY FOR PROBLEMS WHICH ARISE FROM FAILURE TO FOLLOW THESE PLANS, SPECIFICATIONS AND THE DESIGN INTENT THEY CONVEY, OR FOR PROBLEMS WHICH ARISE FROM OTHERS' FAILURE TO OBTAIN AND/OR FOLLOW THE ENGINEER'S GUIDANCE WITH RESPECT TO ANY ERRORS, OMISSIONS, INCONSISTENCIES AMBIGUITIES OR CONFLICTS WHICH ARE ALLEGED.

CONTRACTOR TO VERIFY ALL DIMENSIONS AND NOTIFY THE ENGINEER OF ANY DISCREPANCIES BEFORE WORK COMMENCES. DO NOT SCALE DRAWINGS.

5m 2 0 5 10m

SCALE: 1:300

SUBJECT TO APPROVAL

No.	REVISIONS	BY	DATE
04	ISSUED FOR APPROVAL	M.L.	26 JAN 2026
03	ISSUED FOR APPROVAL	M.L.	26 NOV 2025
02	ISSUED FOR APPROVAL	M.L.	03 NOV 2025
01	ISSUED FOR APPROVAL	M.L.	21 AUG 2025

LICENSED PROFESSIONAL ENGINEER
M. BASNET
100501996
PROVINCE OF ONTARIO

NOT AUTHENTIC UNLESS SIGNED AND DATED

LRL
ENGINEERING | INGÉNIERIE
5430 Canotek Road I Ottawa, ON, K1J 9G2
www.lrl.ca I (613) 842-3434

CLIENT
SCALIA

DESIGNED BY:	DRAWN BY:	APPROVED BY:
M.L.	M.L.	M.B.

PROJECT
MIXED USE APARTMENT DEVELOPMENT
6310 HAZELDEAN ROAD
OTTAWA, ON

DRAWING TITLE
DEMOLITION PLAN

PROJECT NO.
220027 C102

D07-12-25-0121

19408

PAVEMENT STRUCTURE

COURSE	MATERIAL	THICKNESS (mm) AUTOMOBILE PARKING	THICKNESS (mm) TRUCK ROUTE (HEAVY TRAFFIC)
SURFACE	HL.3 A/C (PG 58-34)	50	40
BINDER	HL.8 A/C (PG 58-34)	--	50
BASECOURSE	OPSS GRANULAR "A"	150	150
SUBBASE	OPSS GRANULAR "B" TYPE II	300	450

NOTE:
IN PREPARATION FOR PAVEMENT CONSTRUCTION AT THIS SITE, ANY SURFICIAL OR NEAR SURFACE/SUBGRADE LEVEL TOPSOIL AND ANY SOFT, WET OR DELETERIOUS MATERIALS SHOULD BE REMOVED FROM THE PROPOSED PAVED AREAS. THE EXPOSED SUBGRADE SHOULD BE INSPECTED AND APPROVED BY GEOTECHNICAL PERSONNEL AND ANY SOFT AREAS EVIDENT SHOULD BE SUBEXCAVATED AND REPLACED WITH SUITABLE EARTH BORROW APPROVED BY THE GEOTECHNICAL ENGINEER. THE SUBGRADE SHOULD BE SHAPED AND CROWNED TO PROMOTE DRAINAGE OF THE SITE DRAINAGE STRUCTURES. FOLLOWING APPROVAL OF THE PREPARATION OF THE SUBGRADE, THE PAVEMENT GRANULARS MAY BE PLACED.

REFER TO GEOTECHNICAL REPORT PREPARED BY PATERSON, DATED NOVEMBER 03rd, 2025.

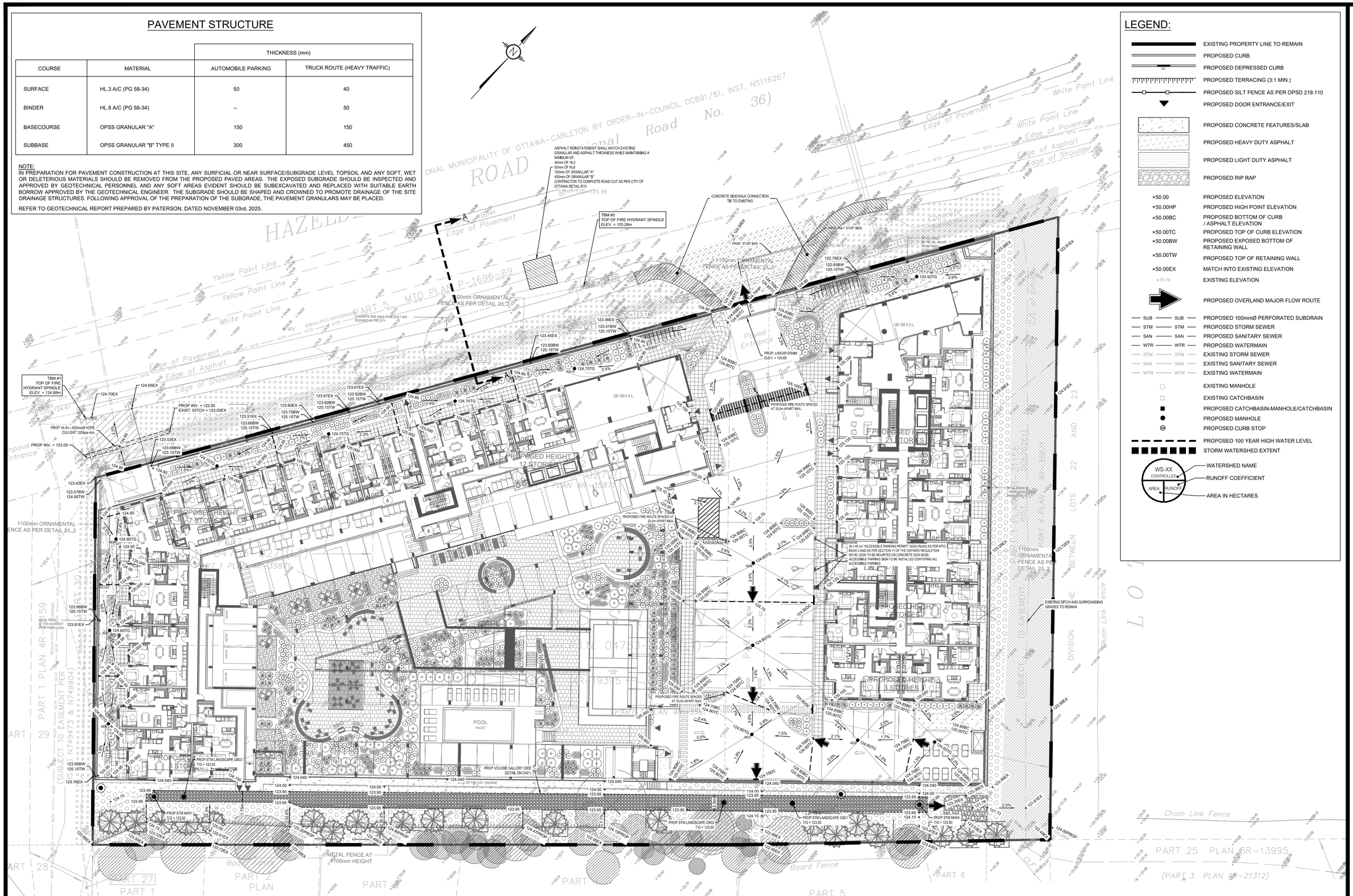

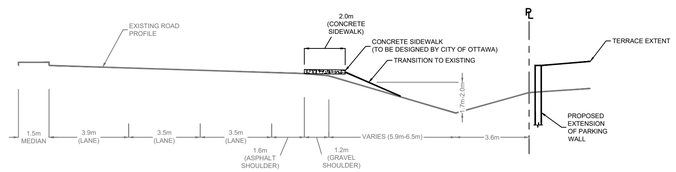

CROSS-SECTION A-A
N.T.S.

LEGEND:

- EXISTING PROPERTY LINE TO REMAIN
- PROPOSED CURB
- PROPOSED DEPRESSED CURB
- PROPOSED TERRACING (3:1 MIN.)
- PROPOSED SILT FENCE AS PER OPSD 219.110
- PROPOSED DOOR ENTRANCE/EXIT
- PROPOSED CONCRETE FEATURES/SLAB
- PROPOSED HEAVY DUTY ASPHALT
- PROPOSED LIGHT DUTY ASPHALT
- PROPOSED RIP RAP
- ×50.00 PROPOSED ELEVATION
- ×50.00HP PROPOSED HIGH POINT ELEVATION
- ×50.00BC PROPOSED BOTTOM OF CURB / ASPHALT ELEVATION
- ×50.00TC PROPOSED TOP OF CURB ELEVATION
- ×50.00BW PROPOSED EXPOSED BOTTOM OF RETAINING WALL
- ×50.00TW PROPOSED TOP OF RETAINING WALL
- ×50.00EX MATCH INTO EXISTING ELEVATION
- ×70.19 EXISTING ELEVATION
- PROPOSED OVERLAND MAJOR FLOW ROUTE
- SUB — PROPOSED 100mmØ PERFORATED SUBDRAIN
- STM — PROPOSED STORM SEWER
- SAN — PROPOSED SANITARY SEWER
- WTR — PROPOSED WATERMAIN
- STM — EXISTING STORM SEWER
- SAN — EXISTING SANITARY SEWER
- WTR — EXISTING WATERMAIN
- EXISTING MANHOLE
- EXISTING CATCHBASIN
- PROPOSED CATCHBASIN-MANHOLE/CATCHBASIN
- PROPOSED MANHOLE
- PROPOSED CURB STOP
- PROPOSED 100 YEAR HIGH WATER LEVEL
- STORM WATERSHED EXTENT
- WS-XX CONTROLLED — WATERSHED NAME
- RUNOFF COEFFICIENT
- AREA — AREA IN HECTARES

5m 2 0 5 10m
SCALE: 1:300

SUBJECT TO APPROVAL

USE AND INTERPRETATION OF DRAWINGS

GENERAL CONDITIONS OF THE CONTRACT FOR CONSTRUCTION ARE PART OF THE CONTRACT DOCUMENTS AND DESCRIBE USE AND INTENT OF THE DRAWING. THE CONTRACT DOCUMENTS INCLUDE NOT ONLY THE DRAWINGS, BUT ALSO THE OWNER-CONTRACTOR AGREEMENTS, CONDITIONS OF THE CONTRACT, THE SPECIFICATIONS, ADDENDA, AND MODIFICATIONS ISSUED AFTER EXECUTION OF THE CONTRACT. THESE CONTRACT DOCUMENTS ARE COMPLEMENTARY, AND WHAT IS REQUIRED BY ANY ONE SHALL BE BINDING AS IF REQUIRED BY ALL. WORK NOT COMPLETELY DELINEATED HEREON SHALL BE CONSTRUCTED OF THE SAME MATERIALS AND DETAILED SIMILARLY AS WORK SHOWN MORE COMPLETELY ELSEWHERE IN THE CONTRACT DOCUMENTS.

BY USE OF THE DRAWINGS FOR CONSTRUCTION OF THE PROJECT, THE OWNER CONFIRMS THAT HE HAS REVIEWED AND APPROVED THE DRAWINGS. THE CONTRACTOR CONFIRMS THAT HE HAS VISITED THE SITE, FAMILIARIZED HIMSELF WITH THE LOCAL CONDITIONS, VERIFIED FIELD DIMENSIONS AND CORRELATED HIS OBSERVATIONS WITH THE REQUIREMENTS OF THE CONTRACT DOCUMENTS.

AS INSTRUMENTS OF SERVICE, ALL DRAWINGS, SPECIFICATIONS, CADD FILES OR OTHER ELECTRONIC MEDIA AND COPIED THERE OF FURNISHED BY THE ENGINEER ARE HIS PROPERTY. THEY ARE TO BE USED ONLY FOR THIS PROJECT AND ARE NOT TO BE USED ON ANY OTHER PROJECT, INCLUDING REPEATS OF THE PROJECT. CHANGES TO THE DRAWINGS MAY ONLY BE MADE BY THE ENGINEER.

UNLESS THE REVISION TITLE IS "ISSUED FOR CONSTRUCTION", THESE DRAWINGS SHALL BE CONSIDERED PRELIMINARY AND SHALL NOT BE USED AS A CONSTRUCTION DOCUMENT.

THESE DRAWINGS ILLUSTRATES THE WORK TO BE DONE. THE ENGINEER IS NOT RESPONSIBLE FOR THE MEANS, METHODS, TECHNIQUES, SEQUENCES, AND PROCEDURES USED TO DO THE WORK, OR THE SAFETY ASPECTS OF CONSTRUCTION, AND NOTHING ON THESE DRAWINGS EXPRESSED OR IMPLIED CHANGES THIS CONDITION. CONTRACTOR SHALL DETERMINE ALL CONDITIONS AT THE SITE AND SHALL BE RESPONSIBLE FOR KNOWING HOW THEY AFFECT THE WORK. SUBMITTAL OF A BID TO PERFORM THIS WORK IS ACKNOWLEDGEMENT OF THE RESPONSIBILITIES, AND THAT THEY HAVE BEEN FULLY CONSIDERED IN PLANNING OF THE WORK, AND THE BID PRICE. NO CLAIMS FOR EXTRA CHARGES DUE TO THESE CONDITIONS WILL BE FORTHCOMING.

UNAUTHORIZED CHANGES:

IN THE EVENT THE CLIENT, THE CLIENT'S CONTRACTORS OR SUBCONTRACTORS, OR ANYONE FOR WHOM THE CLIENT IS LEGALLY LIABLE MAKES OR PERMITS TO BE MADE ANY CHANGES TO ANY REPORTS, PLANS, SPECIFICATIONS OR OTHER CONSTRUCTION DOCUMENTS PREPARED BY LRL ASSOCIATES LTD. (LRL) WITHOUT OBTAINING LRL'S PRIOR WRITTEN CONSENT, THE CLIENT SHALL ASSUME FULL RESPONSIBILITY FOR THE RESULTS OF SUCH CHANGES. THEREFORE THE CLIENT AGREES TO WAIVE ANY CLAIM AGAINST LRL AND TO RELEASE LRL FROM ANY LIABILITY ARISING DIRECTLY OR INDIRECTLY FROM SUCH UNAUTHORIZED CHANGES.

IN ADDITION, THE CLIENT AGREES, TO THE FULLEST EXTENT PERMITTED BY LAW, TO INDEMNIFY AND HOLD HARMLESS LRL FROM ANY DAMAGES, LIABILITIES OR COST, INCLUDING REASONABLE ATTORNEY'S FEES AND COST OF DEFENSE, ARISING FROM SUCH CHANGES.

IN ADDITION, THE CLIENT AGREES TO INCLUDE IN ANY CONTRACTS FOR CONSTRUCTION APPROPRIATE LANGUAGE THAT PROHIBITS THE CONTRACTOR OR ANY SUBCONTRACTORS OF ANY TIER FROM MAKING ANY CHANGES OR MODIFICATIONS TO LRL'S CONSTRUCTION DOCUMENTS WITHOUT THE PRIOR WRITTEN APPROVAL OF LRL AND THAT FURTHER REQUIRES THE CONTRACTOR TO INDEMNIFY BOTH LRL AND THE CLIENT FROM ANY LIABILITY OR COST ARISING FROM SUCH CHANGES MADE WITHOUT SUCH PROPER AUTHORIZATION.

GENERAL NOTES:

EXISTING SERVICES AND UTILITIES SHOWN ON THESE DRAWINGS ARE TAKEN FROM THE BEST AVAILABLE RECORDS, BUT MAY NOT BE COMPLETE OR TO DATE. CONTRACTOR SHALL VERIFY IN FIELD FOR LOCATION AND ELEVATION OF PIPES AND CHECK WITH THE UTILITY COMPANIES BEFORE DIGGING OR PERFORMING WORK.

CONTRACTOR IS ADVISED TO COLLECT INFORMATION ON SOIL CONDITIONS BEFORE START OF CONSTRUCTION.

THE ENGINEER WAIVES ANY AND ALL RESPONSIBILITY AND LIABILITY FOR PROBLEMS WHICH ARISE FROM FAILURE TO FOLLOW THESE PLANS, SPECIFICATIONS AND THE DESIGN INTENT THEY CONVEY, OR FOR PROBLEMS WHICH ARISE FROM OTHERS' FAILURE TO OBTAIN AND/OR FOLLOW THE ENGINEER'S GUIDANCE WITH RESPECT TO ANY ERRORS, OMISSIONS, INCONSISTENCIES AMBIGUITIES OR CONFLICTS WHICH ARE ALLEGED.

CONTRACTOR TO VERIFY ALL DIMENSIONS AND NOTIFY THE ENGINEER OF ANY DISCREPANCIES BEFORE WORK COMMENCES. DO NOT SCALE DRAWINGS.

No.	REVISIONS	BY	DATE
04	ISSUED FOR APPROVAL	M.L.	26 JAN 2026
03	ISSUED FOR APPROVAL	M.L.	26 NOV 2025
02	ISSUED FOR APPROVAL	M.L.	03 NOV 2025
01	ISSUED FOR APPROVAL	M.L.	21 AUG 2025

LICENSED PROFESSIONAL ENGINEER M. BASNET 100501996 PROVINCE OF ONTARIO

NOT AUTHENTIC UNLESS SIGNED AND DATED

LRL
ENGINEERING | INGÉNIERIE
5430 Canotek Road | Ottawa, ON, K1J 9G2
www.lrl.ca | (613) 842-3434

CLIENT
SCALIA

DESIGNED BY:	DRAWN BY:	APPROVED BY:
M.L.	M.L.	M.B.

PROJECT
MIXED USE APARTMENT DEVELOPMENT
6310 HAZELDEAN ROAD
OTTAWA, ON

DRAWING TITLE
GRADING AND DRAINAGE PLAN

PROJECT NO.
220027

C301

D07-12-25-0121

19408

NOTE:

- STORMWATER RUNOFF FROM AREA DRAINS AD1 - AD5 TO BE DIRECTED TO CISTERN 2
- STORMWATER RUNOFF FROM ROOF DRAINS IN BUILDING 1 AND 2 TO BE DIRECTED TO CISTERN 1
- STORMWATER RUNOFF FROM AREA DRAINS AD6 - AD12 TO BE DIRECTED TO CISTERN 1

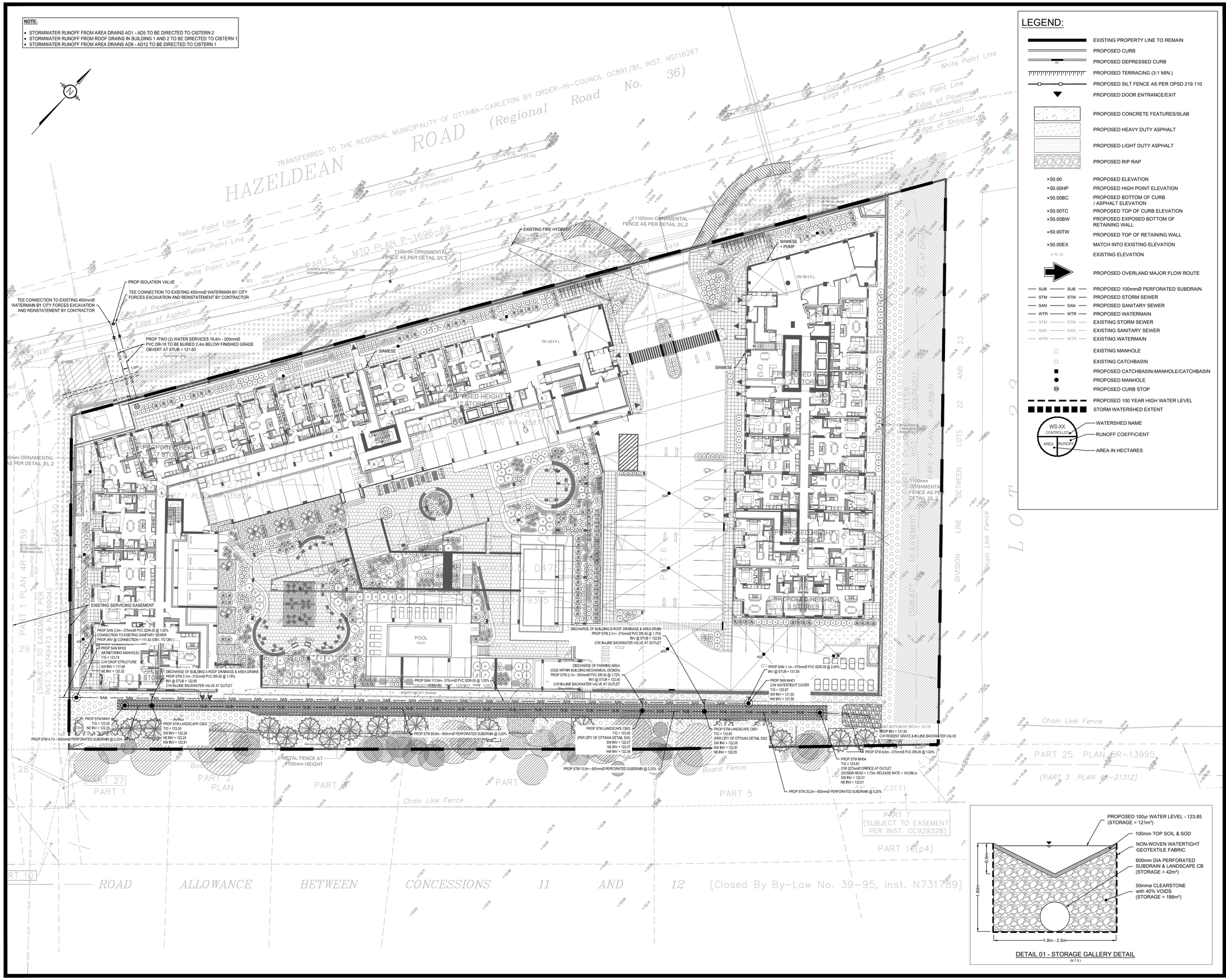

LEGEND:

- EXISTING PROPERTY LINE TO REMAIN
- PROPOSED CURB
- PROPOSED DEPRESSED CURB
- PROPOSED TERRACING (3:1 MIN.)
- PROPOSED SILT FENCE AS PER OPSD 219.110
- PROPOSED DOOR ENTRANCE/EXIT
- PROPOSED CONCRETE FEATURES/SLAB
- PROPOSED HEAVY DUTY ASPHALT
- PROPOSED LIGHT DUTY ASPHALT
- PROPOSED RIP RAP
- ×50.00 — PROPOSED ELEVATION
- ×50.00HP — PROPOSED HIGH POINT ELEVATION
- ×50.00BC — PROPOSED BOTTOM OF CURB / ASPHALT ELEVATION
- ×50.00TC — PROPOSED TOP OF CURB ELEVATION
- ×50.00BW — PROPOSED EXPOSED BOTTOM OF RETAINING WALL
- ×50.00TW — PROPOSED TOP OF RETAINING WALL
- ×50.00EX — MATCH INTO EXISTING ELEVATION
- ×70.19 — EXISTING ELEVATION
- PROPOSED OVERLAND MAJOR FLOW ROUTE
- SUB — PROPOSED 100mmØ PERFORATED SUBDRAIN
- STM — PROPOSED STORM SEWER
- SAN — PROPOSED SANITARY SEWER
- WTR — PROPOSED WATERMAIN
- STM — EXISTING STORM SEWER
- SAN — EXISTING SANITARY SEWER
- WTR — EXISTING WATERMAIN
- EXISTING MANHOLE
- EXISTING CATCHBASIN
- PROPOSED CATCHBASIN-MANHOLE/CATCHBASIN
- PROPOSED MANHOLE
- PROPOSED CURB STOP
- PROPOSED 100 YEAR HIGH WATER LEVEL
- STORM WATERSHED EXTENT

WS-XX — WATERSHED NAME
CONTROLLED — RUNOFF COEFFICIENT
AREA — AREA IN HECTARES

USE AND INTERPRETATION OF DRAWINGS

GENERAL CONDITIONS OF THE CONTRACT FOR CONSTRUCTION ARE PART OF THE CONTRACT DOCUMENTS AND DESCRIBE USE AND INTENT OF THE DRAWING. THE CONTRACT DOCUMENTS INCLUDE NOT ONLY THE DRAWINGS, BUT ALSO THE OWNER-CONTRACTOR AGREEMENTS, CONDITIONS OF THE CONTRACT, THE SPECIFICATIONS, ADDENDA, AND MODIFICATIONS ISSUED AFTER EXECUTION OF THE CONTRACT. THESE CONTRACT DOCUMENTS ARE COMPLEMENTARY, AND WHAT IS REQUIRED BY ANY ONE SHALL BE BINDING AS IF REQUIRED BY ALL. WORK NOT COMPLETELY DELINEATED HEREON SHALL BE CONSTRUCTED OF THE SAME MATERIALS AND DETAILED SIMILARLY AS WORK SHOWN MORE COMPLETELY ELSEWHERE IN THE CONTRACT DOCUMENTS.

BY USE OF THE DRAWINGS FOR CONSTRUCTION OF THE PROJECT, THE OWNER CONFIRMS THAT HE HAS REVIEWED AND APPROVED THE DRAWINGS. THE CONTRACTOR CONFIRMS THAT HE HAS VISITED THE SITE, FAMILIARIZED HIMSELF WITH THE LOCAL CONDITIONS, VERIFIED FIELD DIMENSIONS AND CORRELATED HIS OBSERVATIONS WITH THE REQUIREMENTS OF THE CONTRACT DOCUMENTS.

AS INSTRUMENTS OF SERVICE, ALL DRAWINGS, SPECIFICATIONS, CADD FILES OR OTHER ELECTRONIC MEDIA AND COPIED THERE OF FURNISHED BY THE ENGINEER ARE HIS PROPERTY. THEY ARE TO BE USED ONLY FOR THIS PROJECT AND ARE NOT TO BE USED ON ANY OTHER PROJECT, INCLUDING REPEATS OF THE PROJECT. CHANGES TO THE DRAWINGS MAY ONLY BE MADE BY THE ENGINEER.

UNLESS THE REVISION TITLE IS "ISSUED FOR CONSTRUCTION", THESE DRAWINGS SHALL BE CONSIDERED PRELIMINARY AND SHALL NOT BE USED AS A CONSTRUCTION DOCUMENT.

THESE DRAWINGS ILLUSTRATES THE WORK TO BE DONE. THE ENGINEER IS NOT RESPONSIBLE FOR THE MEANS, METHODS, TECHNIQUES, SEQUENCES, AND PROCEDURES USED TO DO THE WORK, OR THE SAFETY ASPECTS OF CONSTRUCTION, AND NOTHING ON THESE DRAWINGS EXPRESSED OR IMPLIED CHANGES THIS CONDITION. CONTRACTOR SHALL DETERMINE ALL CONDITIONS AT THE SITE AND SHALL BE RESPONSIBLE FOR KNOWING HOW THEY AFFECT THE WORK. SUBMITTAL OF A BID TO PERFORM THIS WORK IS ACKNOWLEDGEMENT OF THE RESPONSIBILITIES, AND THAT THEY HAVE BEEN FULLY CONSIDERED IN PLANNING OF THE WORK, AND THE BID PRICE. NO CLAIMS FOR EXTRA CHARGES DUE TO THESE CONDITIONS WILL BE FORTHCOMING.

UNAUTHORIZED CHANGES:

IN THE EVENT THE CLIENT, THE CLIENT'S CONTRACTORS OR SUBCONTRACTORS, OR ANYONE FOR WHOM THE CLIENT IS LEGALLY LIABLE MAKES OR PERMITS TO BE MADE ANY CHANGES TO ANY REPORTS, PLANS, SPECIFICATIONS OR OTHER CONSTRUCTION DOCUMENTS PREPARED BY LRL ASSOCIATES LTD. (LRL) WITHOUT OBTAINING LRL'S PRIOR WRITTEN CONSENT, THE CLIENT SHALL ASSUME FULL RESPONSIBILITY FOR THE RESULTS OF SUCH CHANGES. THEREFORE THE CLIENT AGREES TO WAIVE ANY CLAIM AGAINST LRL AND TO RELEASE LRL FROM ANY LIABILITY ARISING DIRECTLY OR INDIRECTLY FROM SUCH UNAUTHORIZED CHANGES.

IN ADDITION, THE CLIENT AGREES, TO THE FULLEST EXTENT PERMITTED BY LAW, TO INDEMNIFY AND HOLD HARMLESS LRL FROM ANY DAMAGES, LIABILITIES OR COST, INCLUDING REASONABLE ATTORNEY'S FEES AND COST OF DEFENSE, ARISING FROM SUCH CHANGES.

IN ADDITION, THE CLIENT AGREES TO INCLUDE IN ANY CONTRACTS FOR CONSTRUCTION APPROPRIATE LANGUAGE THAT PROHIBITS THE CONTRACTOR OR ANY SUBCONTRACTORS OF ANY TIER FROM MAKING ANY CHANGES OR MODIFICATIONS TO LRL'S CONSTRUCTION DOCUMENTS WITHOUT THE PRIOR WRITTEN APPROVAL OF LRL AND THAT FURTHER REQUIRES THE CONTRACTOR TO INDEMNIFY BOTH LRL AND THE CLIENT FROM ANY LIABILITY OR COST ARISING FROM SUCH CHANGES MADE WITHOUT SUCH PROPER AUTHORIZATION.

GENERAL NOTES:

EXISTING SERVICES AND UTILITIES SHOWN ON THESE DRAWINGS ARE TAKEN FROM THE BEST AVAILABLE RECORDS, BUT MAY NOT BE COMPLETE OR TO DATE. CONTRACTOR SHALL VERIFY IN FIELD FOR LOCATION AND ELEVATION OF PIPES AND CHECK WITH THE UTILITY COMPANIES BEFORE DIGGING OR PERFORMING WORK.

CONTRACTOR IS ADVISED TO COLLECT INFORMATION ON SOIL CONDITIONS BEFORE START OF CONSTRUCTION.

THE ENGINEER WAIVES ANY AND ALL RESPONSIBILITY AND LIABILITY FOR PROBLEMS WHICH ARISE FROM FAILURE TO FOLLOW THESE PLANS, SPECIFICATIONS AND THE DESIGN INTENT THEY CONVEY, OR FOR PROBLEMS WHICH ARISE FROM OTHERS' FAILURE TO OBTAIN AND/OR FOLLOW THE ENGINEER'S GUIDANCE WITH RESPECT TO ANY ERRORS, OMISSIONS, INCONSISTENCIES AMBIGUITIES OR CONFLICTS WHICH ARE ALLEGED.

CONTRACTOR TO VERIFY ALL DIMENSIONS AND NOTIFY THE ENGINEER OF ANY DISCREPANCIES BEFORE WORK COMMENCES. DO NOT SCALE DRAWINGS.

5m 2 0 5 10m
SCALE: 1:300

SUBJECT TO APPROVAL

No.	REVISIONS	BY	DATE
04	ISSUED FOR APPROVAL	M.L.	26 JAN 2026
03	ISSUED FOR APPROVAL	M.L.	26 NOV 2025
02	ISSUED FOR APPROVAL	M.L.	03 NOV 2025
01	ISSUED FOR APPROVAL	M.L.	21 AUG 2025

LICENSED PROFESSIONAL ENGINEER M. BASNET 100501996 PROVINCE OF ONTARIO

NOT AUTHENTIC UNLESS SIGNED AND DATED

LRL
ENGINEERING | INGÉNIERIE
5430 Canotek Road I Ottawa, ON, K1J 9G2
www.lrl.ca I (613) 842-3434

CLIENT
SCALIA

DESIGNED BY:	DRAWN BY:	APPROVED BY:
M.L.	M.L.	M.B.

PROJECT
MIXED USE APARTMENT DEVELOPMENT
6310 HAZELDEAN ROAD
OTTAWA, ON

DRAWING TITLE
SERVICING PLAN

PROJECT NO.
220027 C401

DETAIL 01 - STORAGE GALLERY DETAIL
(N.T.S.)

D07-12-25-0121

19408

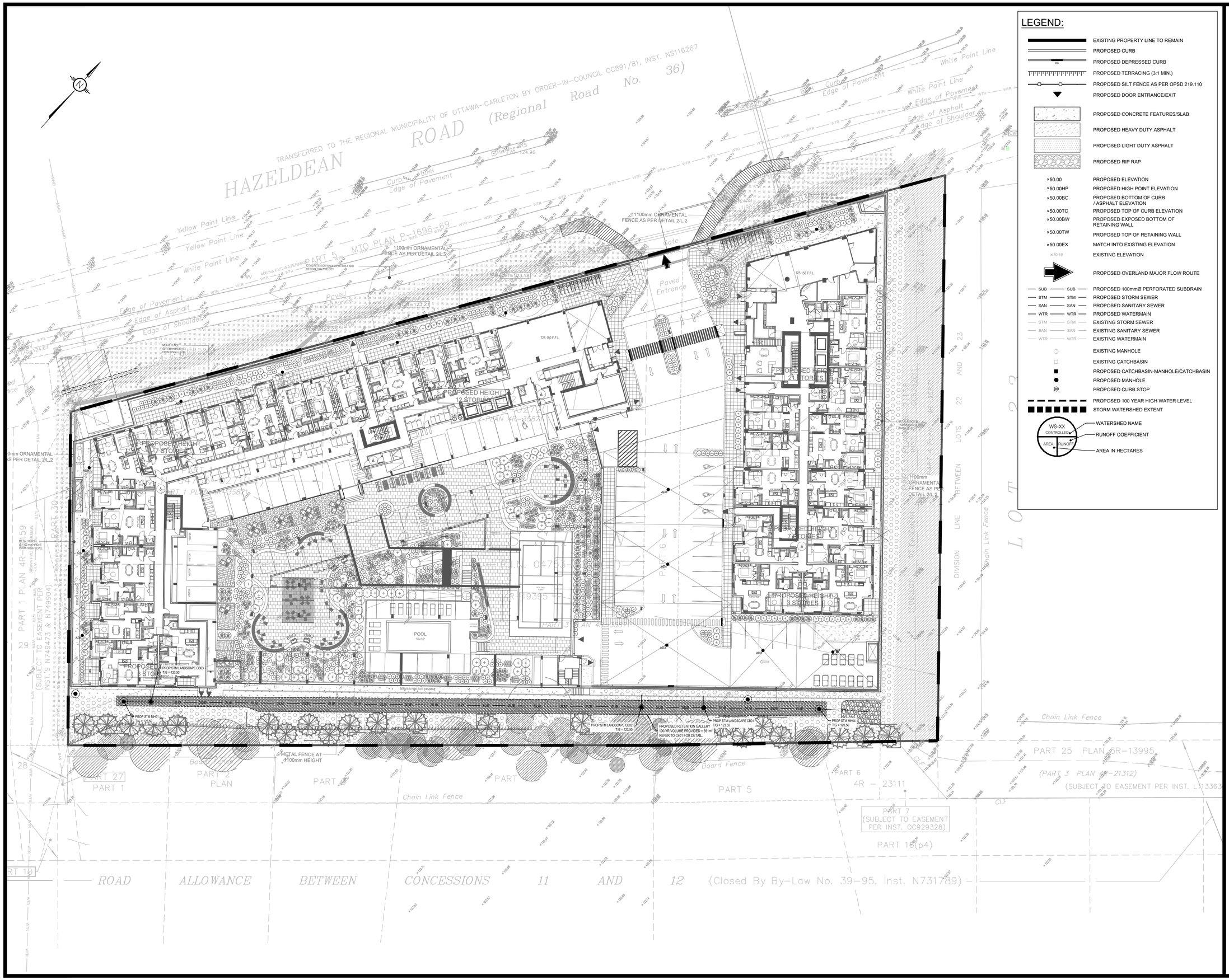

LEGEND:

- EXISTING PROPERTY LINE TO REMAIN
- PROPOSED CURB
- PROPOSED DEPRESSED CURB
- PROPOSED TERRACING (3:1 MIN.)
- PROPOSED SILT FENCE AS PER OPSD 219.110
- PROPOSED DOOR ENTRANCE/EXIT
- PROPOSED CONCRETE FEATURES/SLAB
- PROPOSED HEAVY DUTY ASPHALT
- PROPOSED LIGHT DUTY ASPHALT
- PROPOSED RIP RAP
- ×50.00 — PROPOSED ELEVATION
- ×50.00HP — PROPOSED HIGH POINT ELEVATION
- ×50.00BC — PROPOSED BOTTOM OF CURB / ASPHALT ELEVATION
- ×50.00TC — PROPOSED TOP OF CURB ELEVATION
- ×50.00BW — PROPOSED EXPOSED BOTTOM OF RETAINING WALL
- ×50.00TW — PROPOSED TOP OF RETAINING WALL
- ×50.00EX — MATCH INTO EXISTING ELEVATION
- ×70.19 — EXISTING ELEVATION
- PROPOSED OVERLAND MAJOR FLOW ROUTE
- SUB — SUB — PROPOSED 100mmØ PERFORATED SUBDRAIN
- STM — STM — PROPOSED STORM SEWER
- SAN — SAN — PROPOSED SANITARY SEWER
- WTR — WTR — PROPOSED WATERMAIN
- STM — STM — EXISTING STORM SEWER
- SAN — SAN — EXISTING SANITARY SEWER
- WTR — WTR — EXISTING WATERMAIN
- EXISTING MANHOLE
- EXISTING CATCHBASIN
- PROPOSED CATCHBASIN-MANHOLE/CATCHBASIN
- PROPOSED MANHOLE
- PROPOSED CURB STOP
- PROPOSED 100 YEAR HIGH WATER LEVEL
- STORM WATERSHED EXTENT

WS-XX
CONTROLLED
AREA | RUNOFF
- WATERSHED NAME
- RUNOFF COEFFICIENT
- AREA IN HECTARES

USE AND INTERPRETATION OF DRAWINGS

GENERAL CONDITIONS OF THE CONTRACT FOR CONSTRUCTION ARE PART OF THE CONTRACT DOCUMENTS AND DESCRIBE USE AND INTENT OF THE DRAWING. THE CONTRACT DOCUMENTS INCLUDE NOT ONLY THE DRAWINGS, BUT ALSO THE OWNER-CONTRACTOR AGREEMENTS, CONDITIONS OF THE CONTRACT, THE SPECIFICATIONS, ADDENDA, AND MODIFICATIONS ISSUED AFTER EXECUTION OF THE CONTRACT. THESE CONTRACT DOCUMENTS ARE COMPLEMENTARY, AND WHAT IS REQUIRED BY ANY ONE SHALL BE BINDING AS IF REQUIRED BY ALL. WORK NOT COMPLETELY DELINEATED HEREON SHALL BE CONSTRUCTED OF THE SAME MATERIALS AND DETAILED SIMILARLY AS WORK SHOWN MORE COMPLETELY ELSEWHERE IN THE CONTRACT DOCUMENTS.

BY USE OF THE DRAWINGS FOR CONSTRUCTION OF THE PROJECT, THE OWNER CONFIRMS THAT HE HAS REVIEWED AND APPROVED THE DRAWINGS. THE CONTRACTOR CONFIRMS THAT HE HAS VISITED THE SITE, FAMILIARIZED HIMSELF WITH THE LOCAL CONDITIONS, VERIFIED FIELD DIMENSIONS AND CORRELATED HIS OBSERVATIONS WITH THE REQUIREMENTS OF THE CONTRACT DOCUMENTS.

AS INSTRUMENTS OF SERVICE, ALL DRAWINGS, SPECIFICATIONS, CADD FILES OR OTHER ELECTRONIC MEDIA AND COPIED THERE OF FURNISHED BY THE ENGINEER ARE HIS PROPERTY. THEY ARE TO BE USED ONLY FOR THIS PROJECT AND ARE NOT TO BE USED ON ANY OTHER PROJECT, INCLUDING REPEATS OF THE PROJECT. CHANGES TO THE DRAWINGS MAY ONLY BE MADE BY THE ENGINEER.

UNLESS THE REVISION TITLE IS "ISSUED FOR CONSTRUCTION", THESE DRAWINGS SHALL BE CONSIDERED PRELIMINARY AND SHALL NOT BE USED AS A CONSTRUCTION DOCUMENT.

THESE DRAWINGS ILLUSTRATES THE WORK TO BE DONE. THE ENGINEER IS NOT RESPONSIBLE FOR THE MEANS, METHODS, TECHNIQUES, SEQUENCES, AND PROCEDURES USED TO DO THE WORK, OR THE SAFETY ASPECTS OF CONSTRUCTION, AND NOTHING ON THESE DRAWINGS EXPRESSED OR IMPLIED CHANGES THIS CONDITION. CONTRACTOR SHALL DETERMINE ALL CONDITIONS AT THE SITE AND SHALL BE RESPONSIBLE FOR KNOWING HOW THEY AFFECT THE WORK. SUBMITTAL OF A BID TO PERFORM THIS WORK IS ACKNOWLEDGEMENT OF THE RESPONSIBILITIES, AND THAT THEY HAVE BEEN FULLY CONSIDERED IN PLANNING OF THE WORK, AND THE BID PRICE. NO CLAIMS FOR EXTRA CHARGES DUE TO THESE CONDITIONS WILL BE FORTHCOMING.

UNAUTHORIZED CHANGES:

IN THE EVENT THE CLIENT, THE CLIENT'S CONTRACTORS OR SUBCONTRACTORS, OR ANYONE FOR WHOM THE CLIENT IS LEGALLY LIABLE MAKES OR PERMITS TO BE MADE ANY CHANGES TO ANY REPORTS, PLANS, SPECIFICATIONS OR OTHER CONSTRUCTION DOCUMENTS PREPARED BY LRL ASSOCIATES LTD. (LRL) WITHOUT OBTAINING LRL'S PRIOR WRITTEN CONSENT, THE CLIENT SHALL ASSUME FULL RESPONSIBILITY FOR THE RESULTS OF SUCH CHANGES. THEREFORE THE CLIENT AGREES TO WAIVE ANY CLAIM AGAINST LRL AND TO RELEASE LRL FROM ANY LIABILITY ARISING DIRECTLY OR INDIRECTLY FROM SUCH UNAUTHORIZED CHANGES.

IN ADDITION, THE CLIENT AGREES, TO THE FULLEST EXTENT PERMITTED BY LAW, TO INDEMNIFY AND HOLD HARMLESS LRL FROM ANY DAMAGES, LIABILITIES OR COST, INCLUDING REASONABLE ATTORNEY'S FEES AND COST OF DEFENSE, ARISING FROM SUCH CHANGES.

IN ADDITION, THE CLIENT AGREES TO INCLUDE IN ANY CONTRACTS FOR CONSTRUCTION APPROPRIATE LANGUAGE THAT PROHIBITS THE CONTRACTOR OR ANY SUBCONTRACTORS OF ANY TIER FROM MAKING ANY CHANGES OR MODIFICATIONS TO LRL'S CONSTRUCTION DOCUMENTS WITHOUT THE PRIOR WRITTEN APPROVAL OF LRL AND THAT FURTHER REQUIRES THE CONTRACTOR TO INDEMNIFY BOTH LRL AND THE CLIENT FROM ANY LIABILITY OR COST ARISING FROM SUCH CHANGES MADE WITHOUT SUCH PROPER AUTHORIZATION.

GENERAL NOTES:

EXISTING SERVICES AND UTILITIES SHOWN ON THESE DRAWINGS ARE TAKEN FROM THE BEST AVAILABLE RECORDS, BUT MAY NOT BE COMPLETE OR TO DATE. CONTRACTOR SHALL VERIFY IN FIELD FOR LOCATION AND ELEVATION OF PIPES AND CHECK WITH THE UTILITY COMPANIES BEFORE DIGGING OR PERFORMING WORK.

CONTRACTOR IS ADVISED TO COLLECT INFORMATION ON SOIL CONDITIONS BEFORE START OF CONSTRUCTION.

THE ENGINEER WAIVES ANY AND ALL RESPONSIBILITY AND LIABILITY FOR PROBLEMS WHICH ARISE FROM FAILURE TO FOLLOW THESE PLANS, SPECIFICATIONS AND THE DESIGN INTENT THEY CONVEY, OR FOR PROBLEMS WHICH ARISE FROM OTHERS' FAILURE TO OBTAIN AND/OR FOLLOW THE ENGINEER'S GUIDANCE WITH RESPECT TO ANY ERRORS, OMISSIONS, INCONSISTENCIES AMBIGUITIES OR CONFLICTS WHICH ARE ALLEGED.

CONTRACTOR TO VERIFY ALL DIMENSIONS AND NOTIFY THE ENGINEER OF ANY DISCREPANCIES BEFORE WORK COMMENCES. DO NOT SCALE DRAWINGS.

5m 2 0 5 10m
SCALE: 1:300

SUBJECT TO APPROVAL

No.	REVISIONS	BY	DATE
04	ISSUED FOR APPROVAL	M.L.	26 JAN 2026
03	ISSUED FOR APPROVAL	M.L.	26 NOV 2025
02	ISSUED FOR APPROVAL	M.L.	03 NOV 2025
01	ISSUED FOR APPROVAL	M.L.	21 AUG 2025

LICENSED PROFESSIONAL ENGINEER
M. BASNET
100501996
PROVINCE OF ONTARIO

NOT AUTHENTIC UNLESS SIGNED AND DATED

LRL
ENGINEERING | INGÉNIERIE
5430 Canotek Road | Ottawa, ON, K1J 9G2
www.lrl.ca | (613) 842-3434

CLIENT
SCALIA

DESIGNED BY:	DRAWN BY:	APPROVED BY:
M.L.	M.L.	M.B.

PROJECT
MIXED USE APARTMENT DEVELOPMENT
6310 HAZELDEAN ROAD
OTTAWA, ON

DRAWING TITLE
STORMWATER MANAGEMENT PLAN

PROJECT NO.
220027 C601

D07-12-25-0121

19408

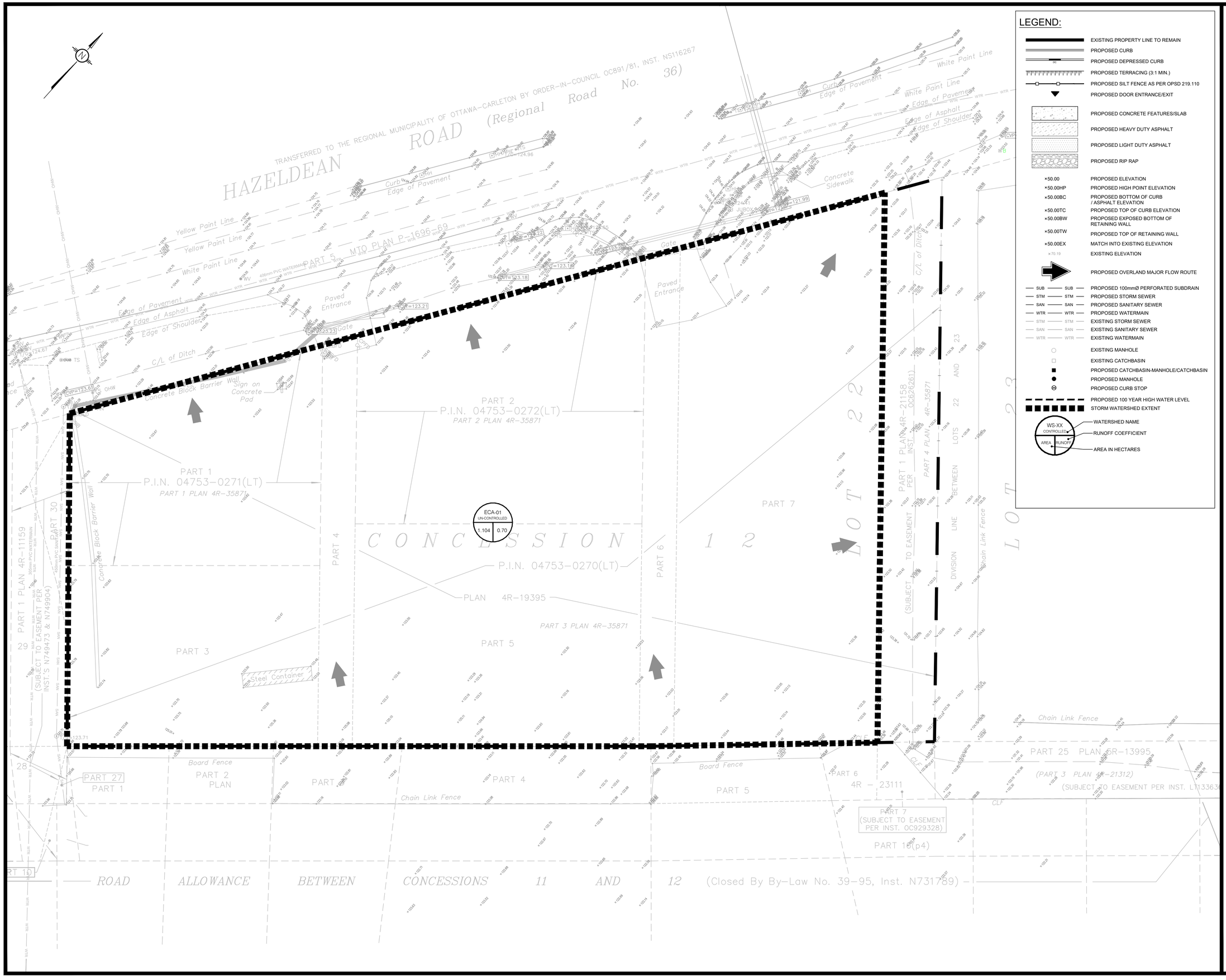

LEGEND:

- EXISTING PROPERTY LINE TO REMAIN
- PROPOSED CURB
- PROPOSED DEPRESSED CURB
- PROPOSED TERRACING (3:1 MIN.)
- PROPOSED SILT FENCE AS PER OPSD 219.110
- PROPOSED DOOR ENTRANCE/EXIT
- PROPOSED CONCRETE FEATURES/SLAB
- PROPOSED HEAVY DUTY ASPHALT
- PROPOSED LIGHT DUTY ASPHALT
- PROPOSED RIP RAP
- ×50.00 — PROPOSED ELEVATION
- ×50.00HP — PROPOSED HIGH POINT ELEVATION
- ×50.00BC — PROPOSED BOTTOM OF CURB / ASPHALT ELEVATION
- ×50.00TC — PROPOSED TOP OF CURB ELEVATION
- ×50.00BW — PROPOSED EXPOSED BOTTOM OF RETAINING WALL
- ×50.00TW — PROPOSED TOP OF RETAINING WALL
- ×50.00EX — MATCH INTO EXISTING ELEVATION
- ×70.19 — EXISTING ELEVATION
- PROPOSED OVERLAND MAJOR FLOW ROUTE
- SUB — PROPOSED 100mmØ PERFORATED SUBDRAIN
- STM — PROPOSED STORM SEWER
- SAN — PROPOSED SANITARY SEWER
- WTR — PROPOSED WATERMAIN
- STM — EXISTING STORM SEWER
- SAN — EXISTING SANITARY SEWER
- WTR — EXISTING WATERMAIN
- EXISTING MANHOLE
- EXISTING CATCHBASIN
- PROPOSED CATCHBASIN-MANHOLE/CATCHBASIN
- PROPOSED MANHOLE
- PROPOSED CURB STOP
- PROPOSED 100 YEAR HIGH WATER LEVEL
- STORM WATERSHED EXTENT
- WS-XX — WATERSHED NAME
- CONTROLLED — RUNOFF COEFFICIENT
- AREA — AREA IN HECTARES

USE AND INTERPRETATION OF DRAWINGS

GENERAL CONDITIONS OF THE CONTRACT FOR CONSTRUCTION ARE PART OF THE CONTRACT DOCUMENTS AND DESCRIBE USE AND INTENT OF THE DRAWING. THE CONTRACT DOCUMENTS INCLUDE NOT ONLY THE DRAWINGS, BUT ALSO THE OWNER-CONTRACTOR AGREEMENTS, CONDITIONS OF THE CONTRACT, THE SPECIFICATIONS, ADDENDA, AND MODIFICATIONS ISSUED AFTER EXECUTION OF THE CONTRACT. THESE CONTRACT DOCUMENTS ARE COMPLEMENTARY, AND WHAT IS REQUIRED BY ANY ONE SHALL BE BINDING AS IF REQUIRED BY ALL. WORK NOT COMPLETELY DELINEATED HEREON SHALL BE CONSTRUCTED OF THE SAME MATERIALS AND DETAILED SIMILARLY AS WORK SHOWN MORE COMPLETELY ELSEWHERE IN THE CONTRACT DOCUMENTS.

BY USE OF THE DRAWINGS FOR CONSTRUCTION OF THE PROJECT, THE OWNER CONFIRMS THAT HE HAS REVIEWED AND APPROVED THE DRAWINGS. THE CONTRACTOR CONFIRMS THAT HE HAS VISITED THE SITE, FAMILIARIZED HIMSELF WITH THE LOCAL CONDITIONS, VERIFIED FIELD DIMENSIONS AND CORRELATED HIS OBSERVATIONS WITH THE REQUIREMENTS OF THE CONTRACT DOCUMENTS.

AS INSTRUMENTS OF SERVICE, ALL DRAWINGS, SPECIFICATIONS, CADD FILES OR OTHER ELECTRONIC MEDIA AND COPIED THERE OF FURNISHED BY THE ENGINEER ARE HIS PROPERTY. THEY ARE TO BE USED ONLY FOR THIS PROJECT AND ARE NOT TO BE USED ON ANY OTHER PROJECT, INCLUDING REPEATS OF THE PROJECT. CHANGES TO THE DRAWINGS MAY ONLY BE MADE BY THE ENGINEER.

UNLESS THE REVISION TITLE IS "ISSUED FOR CONSTRUCTION", THESE DRAWINGS SHALL BE CONSIDERED PRELIMINARY AND SHALL NOT BE USED AS A CONSTRUCTION DOCUMENT.

THESE DRAWINGS ILLUSTRATES THE WORK TO BE DONE. THE ENGINEER IS NOT RESPONSIBLE FOR THE MEANS, METHODS, TECHNIQUES, SEQUENCES, AND PROCEDURES USED TO DO THE WORK, OR THE SAFETY ASPECTS OF CONSTRUCTION, AND NOTHING ON THESE DRAWINGS EXPRESSED OR IMPLIED CHANGES THIS CONDITION. CONTRACTOR SHALL DETERMINE ALL CONDITIONS AT THE SITE AND SHALL BE RESPONSIBLE FOR KNOWING HOW THEY AFFECT THE WORK. SUBMITTAL OF A BID TO PERFORM THIS WORK IS ACKNOWLEDGEMENT OF THE RESPONSIBILITIES, AND THAT THEY HAVE BEEN FULLY CONSIDERED IN PLANNING OF THE WORK, AND THE BID PRICE. NO CLAIMS FOR EXTRA CHARGES DUE TO THESE CONDITIONS WILL BE FORTHCOMING.

UNAUTHORIZED CHANGES:

IN THE EVENT THE CLIENT, THE CLIENT'S CONTRACTORS OR SUBCONTRACTORS, OR ANYONE FOR WHOM THE CLIENT IS LEGALLY LIABLE MAKES OR PERMITS TO BE MADE ANY CHANGES TO ANY REPORTS, PLANS, SPECIFICATIONS OR OTHER CONSTRUCTION DOCUMENTS PREPARED BY LRL ASSOCIATES LTD. (LRL) WITHOUT OBTAINING LRL'S PRIOR WRITTEN CONSENT, THE CLIENT SHALL ASSUME FULL RESPONSIBILITY FOR THE RESULTS OF SUCH CHANGES. THEREFORE THE CLIENT AGREES TO WAIVE ANY CLAIM AGAINST LRL AND TO RELEASE LRL FROM ANY LIABILITY ARISING DIRECTLY OR INDIRECTLY FROM SUCH UNAUTHORIZED CHANGES.

IN ADDITION, THE CLIENT AGREES, TO THE FULLEST EXTENT PERMITTED BY LAW, TO INDEMNIFY AND HOLD HARMLESS LRL FROM ANY DAMAGES, LIABILITIES OR COST, INCLUDING REASONABLE ATTORNEY'S FEES AND COST OF DEFENSE, ARISING FROM SUCH CHANGES.

IN ADDITION, THE CLIENT AGREES TO INCLUDE IN ANY CONTRACTS FOR CONSTRUCTION APPROPRIATE LANGUAGE THAT PROHIBITS THE CONTRACTOR OR ANY SUBCONTRACTORS OF ANY TIER FROM MAKING ANY CHANGES OR MODIFICATIONS TO LRL'S CONSTRUCTION DOCUMENTS WITHOUT THE PRIOR WRITTEN APPROVAL OF LRL AND THAT FURTHER REQUIRES THE CONTRACTOR TO INDEMNIFY BOTH LRL AND THE CLIENT FROM ANY LIABILITY OR COST ARISING FROM SUCH CHANGES MADE WITHOUT SUCH PROPER AUTHORIZATION.

GENERAL NOTES:

EXISTING SERVICES AND UTILITIES SHOWN ON THESE DRAWINGS ARE TAKEN FROM THE BEST AVAILABLE RECORDS, BUT MAY NOT BE COMPLETE OR TO DATE. CONTRACTOR SHALL VERIFY IN FIELD FOR LOCATION AND ELEVATION OF PIPES AND CHECK WITH THE UTILITY COMPANIES BEFORE DIGGING OR PERFORMING WORK.

CONTRACTOR IS ADVISED TO COLLECT INFORMATION ON SOIL CONDITIONS BEFORE START OF CONSTRUCTION.

THE ENGINEER WAIVES ANY AND ALL RESPONSIBILITY AND LIABILITY FOR PROBLEMS WHICH ARISE FROM FAILURE TO FOLLOW THESE PLANS, SPECIFICATIONS AND THE DESIGN INTENT THEY CONVEY, OR FOR PROBLEMS WHICH ARISE FROM OTHERS' FAILURE TO OBTAIN AND/OR FOLLOW THE ENGINEER'S GUIDANCE WITH RESPECT TO ANY ERRORS, OMISSIONS, INCONSISTENCIES AMBIGUITIES OR CONFLICTS WHICH ARE ALLEGED.

CONTRACTOR TO VERIFY ALL DIMENSIONS AND NOTIFY THE ENGINEER OF ANY DISCREPANCIES BEFORE WORK COMMENCES. DO NOT SCALE DRAWINGS.

5m 2 0 5 10m

SCALE: 1:300

SUBJECT TO APPROVAL

No.	REVISIONS	BY	DATE
04	ISSUED FOR APPROVAL	M.L.	26 JAN 2026
03	ISSUED FOR APPROVAL	M.L.	26 NOV 2025
02	ISSUED FOR APPROVAL	M.L.	03 NOV 2025
01	ISSUED FOR APPROVAL	M.L.	21 AUG 2025

LICENSED PROFESSIONAL ENGINEER
M. BASNET
100501996
PROVINCE OF ONTARIO

NOT AUTHENTIC UNLESS SIGNED AND DATED

LRL
ENGINEERING | INGÉNIERIE
5430 Canotek Road I Ottawa, ON, K1J 9G2
www.lrl.ca I (613) 842-3434

CLIENT
SCALIA

DESIGNED BY:	DRAWN BY:	APPROVED BY:
M.L.	M.L.	M.B.

PROJECT
MIXED USE APARTMENT DEVELOPMENT
6310 HAZELDEAN ROAD
OTTAWA, ON

DRAWING TITLE
PRE-DEVELOPMENT
WATERSHED PLAN

PROJECT NO.
220027

C701

D07-12-25-0121

19408

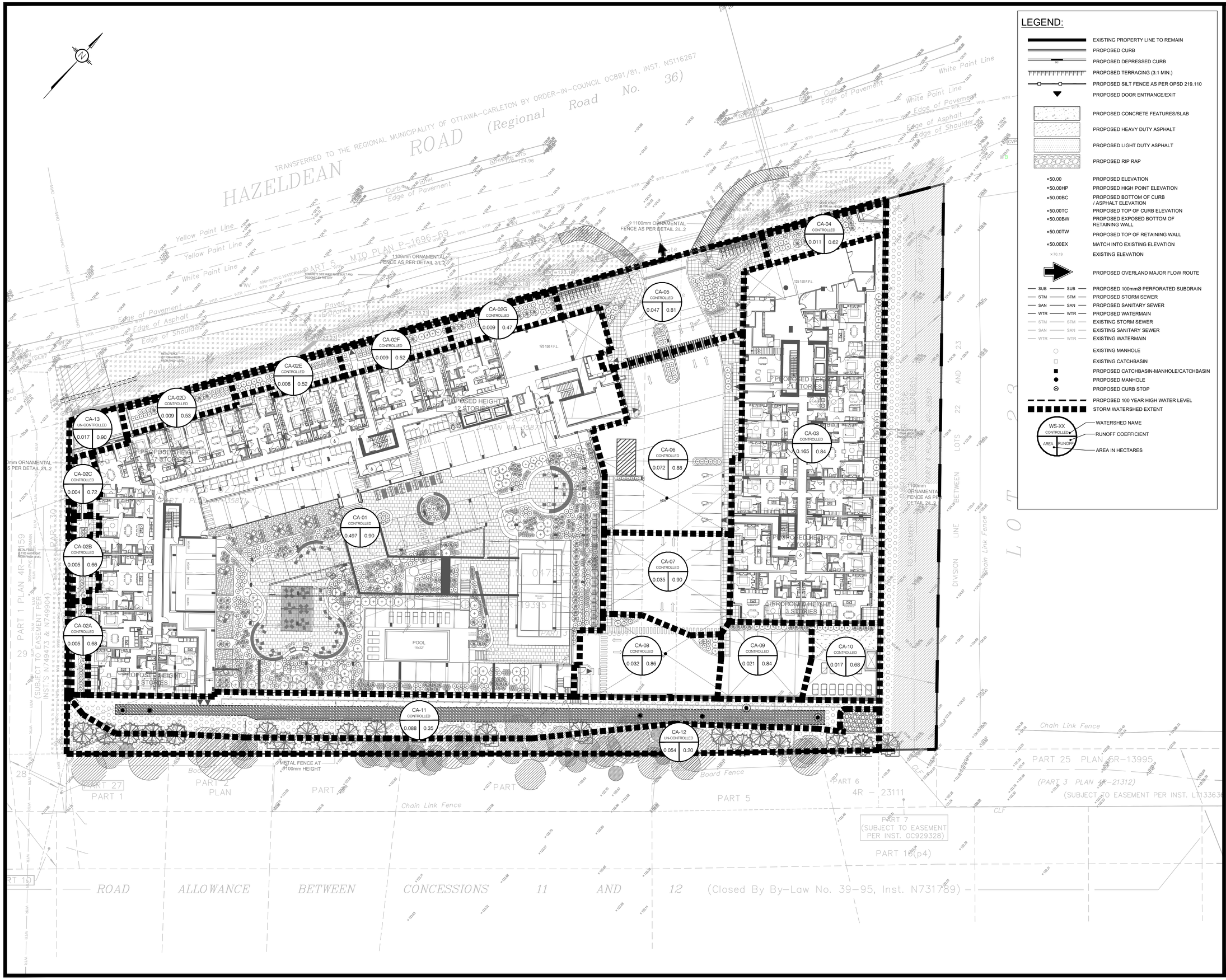

LEGEND:

- EXISTING PROPERTY LINE TO REMAIN
- PROPOSED CURB
- PROPOSED DEPRESSED CURB
- PROPOSED TERRACING (3:1 MIN.)
- PROPOSED SILT FENCE AS PER OPSD 219.110
- PROPOSED DOOR ENTRANCE/EXIT
- PROPOSED CONCRETE FEATURES/SLAB
- PROPOSED HEAVY DUTY ASPHALT
- PROPOSED LIGHT DUTY ASPHALT
- PROPOSED RIP RAP
- ×50.00 PROPOSED ELEVATION
- ×50.00HP PROPOSED HIGH POINT ELEVATION
- ×50.00BC PROPOSED BOTTOM OF CURB / ASPHALT ELEVATION
- ×50.00TC PROPOSED TOP OF CURB ELEVATION
- ×50.00BW PROPOSED EXPOSED BOTTOM OF RETAINING WALL
- ×50.00TW PROPOSED TOP OF RETAINING WALL
- ×50.00EX MATCH INTO EXISTING ELEVATION
- ×70.19 EXISTING ELEVATION
- PROPOSED OVERLAND MAJOR FLOW ROUTE
- SUB — SUB PROPOSED 100mmØ PERFORATED SUBDRAIN
- STM — STM PROPOSED STORM SEWER
- SAN — SAN PROPOSED SANITARY SEWER
- WTR — WTR PROPOSED WATERMAIN
- STM — STM EXISTING STORM SEWER
- SAN — SAN EXISTING SANITARY SEWER
- WTR — WTR EXISTING WATERMAIN
- EXISTING MANHOLE
- EXISTING CATCHBASIN
- PROPOSED CATCHBASIN-MANHOLE/CATCHBASIN
- PROPOSED MANHOLE
- PROPOSED CURB STOP
- PROPOSED 100 YEAR HIGH WATER LEVEL
- STORM WATERSHED EXTENT
- WS-XX CONTROLLED / AREA / RUNOFF — WATERSHED NAME; RUNOFF COEFFICIENT; AREA IN HECTARES

USE AND INTERPRETATION OF DRAWINGS

GENERAL CONDITIONS OF THE CONTRACT FOR CONSTRUCTION ARE PART OF THE CONTRACT DOCUMENTS AND DESCRIBE USE AND INTENT OF THE DRAWING. THE CONTRACT DOCUMENTS INCLUDE NOT ONLY THE DRAWINGS, BUT ALSO THE OWNER-CONTRACTOR AGREEMENTS, CONDITIONS OF THE CONTRACT, THE SPECIFICATIONS, ADDENDA, AND MODIFICATIONS ISSUED AFTER EXECUTION OF THE CONTRACT. THESE CONTRACT DOCUMENTS ARE COMPLEMENTARY, AND WHAT IS REQUIRED BY ANY ONE SHALL BE BINDING AS IF REQUIRED BY ALL. WORK NOT COMPLETELY DELINEATED HEREON SHALL BE CONSTRUCTED OF THE SAME MATERIALS AND DETAILED SIMILARLY AS WORK SHOWN MORE COMPLETELY ELSEWHERE IN THE CONTRACT DOCUMENTS.

BY USE OF THE DRAWINGS FOR CONSTRUCTION OF THE PROJECT, THE OWNER CONFIRMS THAT HE HAS REVIEWED AND APPROVED THE DRAWINGS. THE CONTRACTOR CONFIRMS THAT HE HAS VISITED THE SITE, FAMILIARIZED HIMSELF WITH THE LOCAL CONDITIONS, VERIFIED FIELD DIMENSIONS AND CORRELATED HIS OBSERVATIONS WITH THE REQUIREMENTS OF THE CONTRACT DOCUMENTS.

AS INSTRUMENTS OF SERVICE, ALL DRAWINGS, SPECIFICATIONS, CADD FILES OR OTHER ELECTRONIC MEDIA AND COPIED THERE OF FURNISHED BY THE ENGINEER ARE HIS PROPERTY. THEY ARE TO BE USED ONLY FOR THIS PROJECT AND ARE NOT TO BE USED ON ANY OTHER PROJECT, INCLUDING REPEATS OF THE PROJECT. CHANGES TO THE DRAWINGS MAY ONLY BE MADE BY THE ENGINEER.

UNLESS THE REVISION TITLE IS "ISSUED FOR CONSTRUCTION", THESE DRAWINGS SHALL BE CONSIDERED PRELIMINARY AND SHALL NOT BE USED AS A CONSTRUCTION DOCUMENT.

THESE DRAWINGS ILLUSTRATES THE WORK TO BE DONE. THE ENGINEER IS NOT RESPONSIBLE FOR THE MEANS, METHODS, TECHNIQUES, SEQUENCES, AND PROCEDURES USED TO DO THE WORK, OR THE SAFETY ASPECTS OF CONSTRUCTION, AND NOTHING ON THESE DRAWINGS EXPRESSED OR IMPLIED CHANGES THIS CONDITION. CONTRACTOR SHALL DETERMINE ALL CONDITIONS AT THE SITE AND SHALL BE RESPONSIBLE FOR KNOWING HOW THEY AFFECT THE WORK. SUBMITTAL OF A BID TO PERFORM THIS WORK IS ACKNOWLEDGEMENT OF THE RESPONSIBILITIES, AND THAT THEY HAVE BEEN FULLY CONSIDERED IN PLANNING OF THE WORK, AND THE BID PRICE. NO CLAIMS FOR EXTRA CHARGES DUE TO THESE CONDITIONS WILL BE FORTHCOMING.

UNAUTHORIZED CHANGES:

IN THE EVENT THE CLIENT, THE CLIENT'S CONTRACTORS OR SUBCONTRACTORS, OR ANYONE FOR WHOM THE CLIENT IS LEGALLY LIABLE MAKES OR PERMITS TO BE MADE ANY CHANGES TO ANY REPORTS, PLANS, SPECIFICATIONS OR OTHER CONSTRUCTION DOCUMENTS PREPARED BY LRL ASSOCIATES LTD. (LRL) WITHOUT OBTAINING LRL'S PRIOR WRITTEN CONSENT, THE CLIENT SHALL ASSUME FULL RESPONSIBILITY FOR THE RESULTS OF SUCH CHANGES. THEREFORE THE CLIENT AGREES TO WAIVE ANY CLAIM AGAINST LRL AND TO RELEASE LRL FROM ANY LIABILITY ARISING DIRECTLY OR INDIRECTLY FROM SUCH UNAUTHORIZED CHANGES.

IN ADDITION, THE CLIENT AGREES, TO THE FULLEST EXTENT PERMITTED BY LAW, TO INDEMNIFY AND HOLD HARMLESS LRL FROM ANY DAMAGES, LIABILITIES OR COST, INCLUDING REASONABLE ATTORNEY'S FEES AND COST OF DEFENSE, ARISING FROM SUCH CHANGES.

IN ADDITION, THE CLIENT AGREES TO INCLUDE IN ANY CONTRACTS FOR CONSTRUCTION APPROPRIATE LANGUAGE THAT PROHIBITS THE CONTRACTOR OR ANY SUBCONTRACTORS OF ANY TIER FROM MAKING ANY CHANGES OR MODIFICATIONS TO LRL'S CONSTRUCTION DOCUMENTS WITHOUT THE PRIOR WRITTEN APPROVAL OF LRL AND THAT FURTHER REQUIRES THE CONTRACTOR TO INDEMNIFY BOTH LRL AND THE CLIENT FROM ANY LIABILITY OR COST ARISING FROM SUCH CHANGES MADE WITHOUT SUCH PROPER AUTHORIZATION.

GENERAL NOTES:

EXISTING SERVICES AND UTILITIES SHOWN ON THESE DRAWINGS ARE TAKEN FROM THE BEST AVAILABLE RECORDS, BUT MAY NOT BE COMPLETE OR TO DATE. CONTRACTOR SHALL VERIFY IN FIELD FOR LOCATION AND ELEVATION OF PIPES AND CHECK WITH THE UTILITY COMPANIES BEFORE DIGGING OR PERFORMING WORK.

CONTRACTOR IS ADVISED TO COLLECT INFORMATION ON SOIL CONDITIONS BEFORE START OF CONSTRUCTION.

THE ENGINEER WAIVES ANY AND ALL RESPONSIBILITY AND LIABILITY FOR PROBLEMS WHICH ARISE FROM FAILURE TO FOLLOW THESE PLANS, SPECIFICATIONS AND THE DESIGN INTENT THEY CONVEY, OR FOR PROBLEMS WHICH ARISE FROM OTHERS' FAILURE TO OBTAIN AND/OR FOLLOW THE ENGINEER'S GUIDANCE WITH RESPECT TO ANY ERRORS, OMISSIONS, INCONSISTENCIES AMBIGUITIES OR CONFLICTS WHICH ARE ALLEGED.

CONTRACTOR TO VERIFY ALL DIMENSIONS AND NOTIFY THE ENGINEER OF ANY DISCREPANCIES BEFORE WORK COMMENCES. DO NOT SCALE DRAWINGS.

5m 2 0 5 10m

SCALE: 1:300

SUBJECT TO APPROVAL

No.	REVISIONS	BY	DATE
04	ISSUED FOR APPROVAL	M.L.	26 JAN 2026
03	ISSUED FOR APPROVAL	M.L.	26 NOV 2025
02	ISSUED FOR APPROVAL	M.L.	03 NOV 2025
01	ISSUED FOR APPROVAL	M.L.	21 AUG 2025

LICENSED PROFESSIONAL ENGINEER
M. BASNET
100501996
PROVINCE OF ONTARIO

NOT AUTHENTIC UNLESS SIGNED AND DATED

LRL
ENGINEERING I INGÉNIERIE
5430 Canotek Road I Ottawa, ON, K1J 9G2
www.lrl.ca I (613) 842-3434

CLIENT
SCALIA

DESIGNED BY:	DRAWN BY:	APPROVED BY:
M.L.	M.L.	M.B.

PROJECT
MIXED USE APARTMENT DEVELOPMENT
6310 HAZELDEAN ROAD
OTTAWA, ON

DRAWING TITLE
POST-DEVELOPMENT WATERSHED PLAN

PROJECT NO.
220027

C702

D07-12-25-0121

19408

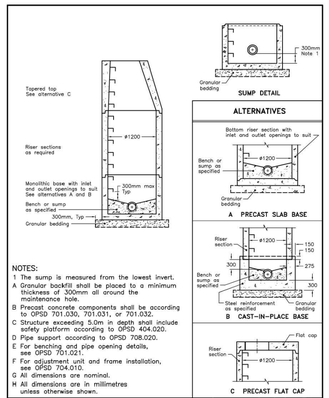

NOTES:
1 The sump is measured from the lowest invert.
A Granular backfill shall be placed to a minimum thickness of 300mm all around the maintenance hole.
B Precast concrete components shall be according to OPSD 701.030, 701.031, or 701.032.
C Structure exceeding 5.0m in depth shall include safety platform according to OPSD 404.020.
D Pipe support according to OPSD 708.020.
E For benching and pipe opening details, see OPSD 701.021.
F For adjustment unit and frame installation, see OPSD 704.010.
G All dimensions are nominal.
H All dimensions are in millimetres unless otherwise shown.

ONTARIO PROVINCIAL STANDARD DRAWING	Nov 2014	Rev 5
PRECAST CONCRETE MAINTENANCE HOLE 1200mm DIAMETER		OPSD 701.010

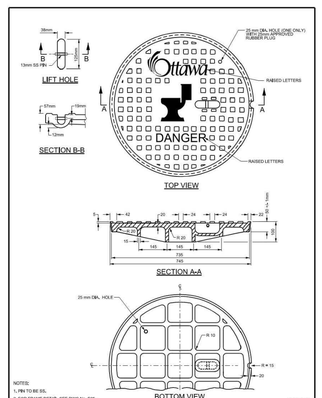

NOTES:
1. PIN TO BE SSL.
2. FOR FRAME DETAIL SEE DWG No. S25.
3. ALL DIMENSIONS ARE IN MILLIMETRES UNLESS OTHERWISE SHOWN.

Ottawa	STANDARD CIRCULAR SANITARY & COMBINED MAINTENANCE HOLE COVER	DATE: MARCH 2008	REV. DATE: MARCH 2017	DWG. No.: S24

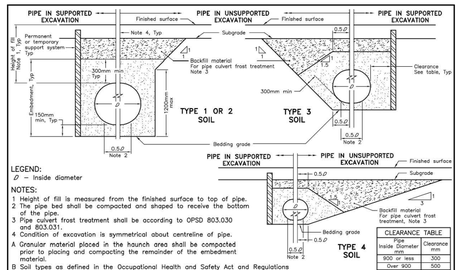

LEGEND:
Ø – Inside diameter

NOTES:
1 Height of fill is measured from the finished surface to top of pipe.
2 The pipe bed shall be compacted and shaped to receive the bottom of the pipe.
3 Pipe culvert frost treatment shall be according to OPSD 803.030 and 803.031.
4 Condition of excavation is symmetrical about centreline of pipe.
A Granular material placed in the haunch area shall be compacted prior to placing and compacting the remainder of the embedment material.
B Soil types as defined in the Occupational Health and Safety Act and Regulations for Construction Projects.
C All dimensions are in metres unless otherwise shown.

CLEARANCE TABLE

Inside Diameter mm	Clearance mm
900 or less	300
Over 900	500

ONTARIO PROVINCIAL STANDARD DRAWING	Nov 2014	Rev 3
FLEXIBLE PIPE EMBEDMENT AND BACKFILL EARTH EXCAVATION		OPSD 802.010

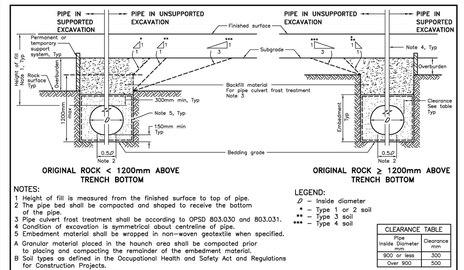

NOTES:
1 Height of fill is measured from the finished surface to top of pipe.
2 The pipe bed shall be compacted and shaped to receive the bottom of the pipe.
3 Pipe culvert frost treatment shall be according to OPSD 803.030 and 803.031.
4 Condition of excavation is symmetrical about centreline of pipe.
5 Embedment material shall be wrapped in non-woven geotextile when specified.
A Granular material placed in the haunch area shall be compacted prior to placing and compacting the remainder of the embedment material.
B Soil types as defined in the Occupational Health and Safety Act and Regulations for Construction Projects.
C Fractured rock shall be treated as Type 1 soil.
D All dimensions are in metres unless otherwise shown.

LEGEND:
Ø – Inside diameter
* – Type 1 or 2 soil
** – Type 3 soil
*** – Type 4 soil

CLEARANCE TABLE

Pipe Inside Diameter mm	Clearance mm
900 or less	300
Over 900	500

ONTARIO PROVINCIAL STANDARD DRAWING	Nov 2014	Rev 3
FLEXIBLE PIPE EMBEDMENT AND BACKFILL ROCK EXCAVATION		OPSD 802.013

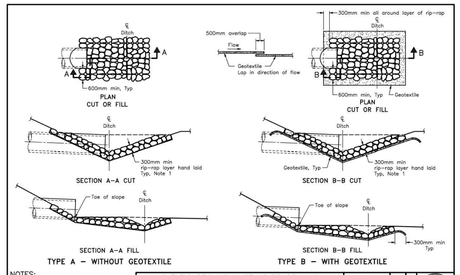

NOTES:
1 The thickness of the rip-rap layer shall be at least 1.5 times the rip-rap mean diameter.
A All dimensions are in millimetres unless otherwise shown.

ONTARIO PROVINCIAL STANDARD DRAWING	Nov 2018	Rev 3
GENERAL RIP-RAP LAYOUT FOR SEWER AND CULVERT OUTLETS		OPSD 810.010

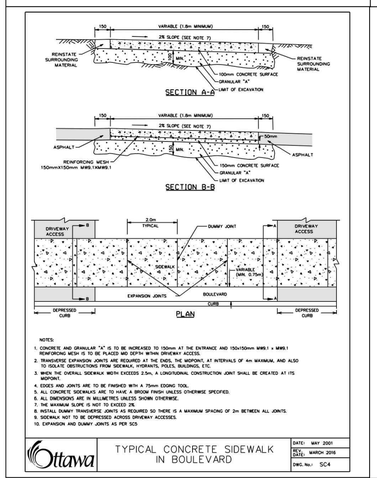

NOTES:
1. CONCRETE AND GRANULAR "A" IS TO BE INCREASED TO 150mm AT THE ENTRANCE AND 150x150mm WWS x WWS REINFORCING MESH IS TO BE PLACED MID DEPTH WITHIN DRIVEWAY ACCESS.
2. TRANSVERSE EXPANSION JOINTS ARE REQUIRED AT THE ENDS, THE MIDPOINT, AT INTERVALS OF 4m MAXIMUM, AND ALSO TO ISOLATE OBSTRUCTIONS FROM SIDEWALK HYDRANTS, POLES, BUILDINGS, ETC.
3. WHEN THE OVERALL SIDEWALK WIDTH EXCEEDS 2.5m, A LONGITUDINAL CONSTRUCTION JOINT SHALL BE CREATED AT ITS MIDPOINT.
4. EDGES AND JOINTS ARE TO BE FINISHED WITH A 75mm EDGING TOOL.
5. ALL CONCRETE SIDEWALKS ARE TO HAVE A BROOM FINISH UNLESS OTHERWISE SPECIFIED.
6. ALL DIMENSIONS ARE IN MILLIMETRES UNLESS SHOWN OTHERWISE.
7. THE MAXIMUM SLOPE IS NOT TO EXCEED 2%.
8. INSTALL DUMMY TRANSVERSE JOINTS AS REQUIRED SO THERE IS A MAXIMUM SPACING OF 2m BETWEEN ALL JOINTS.
9. SIDEWALK NOT TO BE DEPRESSED ACROSS DRIVEWAY ACCESSES.
10. EXPANSION AND DUMMY JOINTS AS PER SC5

Ottawa	TYPICAL CONCRETE SIDEWALK IN BOULEVARD	DATE: MAY 2001	REV. DATE: MARCH 2018	DWG. No.: SC4

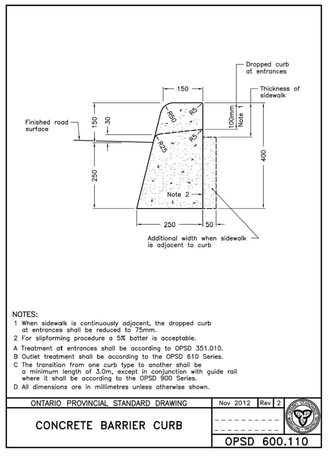

NOTES:
1 When sidewalk is continuously adjacent, the dropped curb at entrances shall be reduced to 75mm.
2 For slipforming procedure a 5% batter is acceptable.
A Treatment at entrances shall be according to OPSD 351.010.
B Outlet treatment shall be according to the OPSD 610 Series.
C The transition from one curb type to another shall be a minimum length of 3.0m, except in conjunction with guide rail where it shall be according to the OPSD 900 Series.
D All dimensions are in millimetres unless otherwise shown.

ONTARIO PROVINCIAL STANDARD DRAWING	Nov 2012	Rev 2
CONCRETE BARRIER CURB		OPSD 600.110

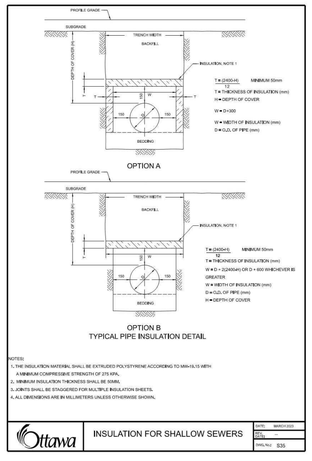

NOTES:
1. THE INSULATION MATERIAL SHALL BE EXTRUDED POLYSTYRENE ACCORDING TO MH-10.10 WITH A MINIMUM COMPRESSIVE STRENGTH OF 275 kPA.
2. MINIMUM INSULATION THICKNESS SHALL BE 50MM.
3. JOINTS SHALL BE STAGGERED FOR MULTIPLE INSULATION SHEETS.
4. ALL DIMENSIONS ARE IN MILLIMETERS UNLESS OTHERWISE SHOWN.

Ottawa	INSULATION FOR SHALLOW SEWERS	DATE: MARCH 2015	REV. DATE:	DWG. No.: S35

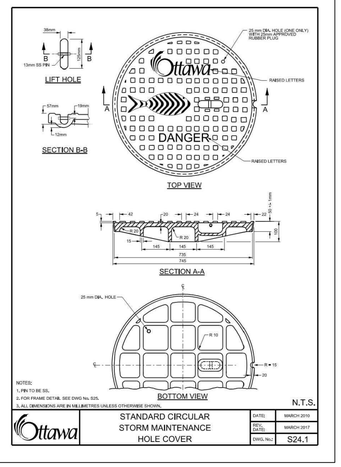

NOTES:
1. PIN TO BE SSL.
2. FOR FRAME DETAIL SEE DWG No. S25.
3. ALL DIMENSIONS ARE IN MILLIMETRES UNLESS OTHERWISE SHOWN.

Ottawa	STANDARD CIRCULAR STORM MAINTENANCE HOLE COVER	DATE: MARCH 2010	REV. DATE: MARCH 2017	DWG. No.: S24.1

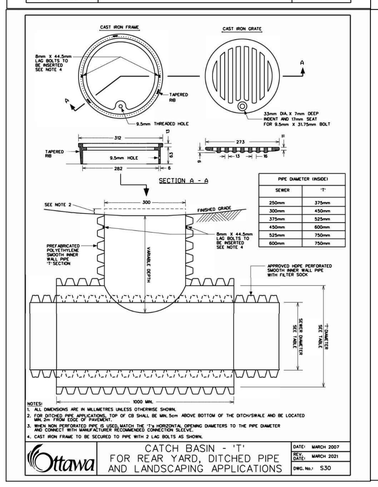

Ottawa	CATCH BASIN - 'T' FOR REAR YARD, DITCHED PIPE AND LANDSCAPING APPLICATIONS	DATE: MARCH 2007	REV. DATE: MARCH 2021	DWG. No.: S30

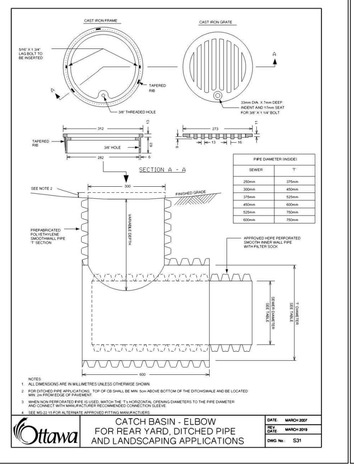

Ottawa	CATCH BASIN - ELBOW FOR REAR YARD, DITCHED PIPE AND LANDSCAPING APPLICATIONS	DATE: MARCH 2007	REV. DATE: MARCH 2015	DWG. No.: S31

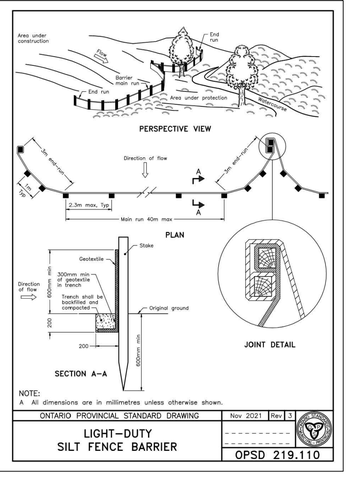

ONTARIO PROVINCIAL STANDARD DRAWING	Nov 2021	Rev 3
LIGHT–DUTY SILT FENCE BARRIER		OPSD 219.110

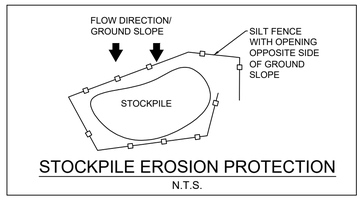

STOCKPILE EROSION PROTECTION
N.T.S.

USE AND INTERPRETATION OF DRAWINGS

GENERAL CONDITIONS OF THE CONTRACT FOR CONSTRUCTION ARE PART OF THE CONTRACT DOCUMENTS AND DESCRIBE USE AND INTENT OF THE DRAWING. THE CONTRACT DOCUMENTS INCLUDE NOT ONLY THE DRAWINGS, BUT ALSO THE OWNER-CONTRACTOR AGREEMENTS, CONDITIONS OF THE CONTRACT, THE SPECIFICATIONS, ADDENDA, AND MODIFICATIONS ISSUED AFTER EXECUTION OF THE CONTRACT. THESE CONTRACT DOCUMENTS ARE COMPLEMENTARY, AND WHAT IS REQUIRED BY ANY ONE SHALL BE BINDING AS IF REQUIRED BY ALL. WORK NOT COMPLETELY DELINEATED HEREON SHALL BE CONSTRUCTED OF THE SAME MATERIALS AND DETAILED SIMILARLY AS WORK SHOWN MORE COMPLETELY ELSEWHERE IN THE CONTRACT DOCUMENTS.

BY USE OF THE DRAWINGS FOR CONSTRUCTION OF THE PROJECT, THE OWNER CONFIRMS THAT HE HAS REVIEWED AND APPROVED THE DRAWINGS. THE CONTRACTOR CONFIRMS THAT HE HAS VISITED THE SITE, FAMILIARIZED HIMSELF WITH THE LOCAL CONDITIONS, VERIFIED FIELD DIMENSIONS AND CORRELATED HIS OBSERVATIONS WITH THE REQUIREMENTS OF THE CONTRACT DOCUMENTS.

AS INSTRUMENTS OF SERVICE, ALL DRAWINGS, SPECIFICATIONS, CADD FILES OR OTHER ELECTRONIC MEDIA AND COPIED THERE OF FURNISHED BY THE ENGINEER ARE HIS PROPERTY. THEY ARE TO BE USED ONLY FOR THIS PROJECT AND ARE NOT TO BE USED ON ANY OTHER PROJECT, INCLUDING REPEATS OF THE PROJECT. CHANGES TO THE DRAWINGS MAY ONLY BE MADE BY THE ENGINEER.

UNLESS THE REVISION TITLE IS "ISSUED FOR CONSTRUCTION", THESE DRAWINGS SHALL BE CONSIDERED PRELIMINARY AND SHALL NOT BE USED AS A CONSTRUCTION DOCUMENT.

THESE DRAWINGS ILLUSTRATES THE WORK TO BE DONE. THE ENGINEER IS NOT RESPONSIBLE FOR THE MEANS, METHODS, TECHNIQUES, SEQUENCES, AND PROCEDURES USED TO DO THE WORK, OR THE SAFETY ASPECTS OF CONSTRUCTION, AND NOTHING ON THESE DRAWINGS EXPRESSED OR IMPLIED CHANGES THIS CONDITION. CONTRACTOR SHALL DETERMINE ALL CONDITIONS AT THE SITE AND SHALL BE RESPONSIBLE FOR KNOWING HOW THEY AFFECT THE WORK. SUBMITTAL OF A BID TO PERFORM THIS WORK IS ACKNOWLEDGEMENT OF THE RESPONSIBILITIES, AND THAT THEY HAVE BEEN FULLY CONSIDERED IN PLANNING OF THE WORK, AND THE BID PRICE. NO CLAIMS FOR EXTRA CHARGES DUE TO THESE CONDITIONS WILL BE FORTHCOMING.

UNAUTHORIZED CHANGES:

IN THE EVENT THE CLIENT, THE CLIENT'S CONTRACTORS OR SUBCONTRACTORS, OR ANYONE FOR WHOM THE CLIENT IS LEGALLY LIABLE MAKES OR PERMITS TO BE MADE ANY CHANGES TO ANY REPORTS, PLANS, SPECIFICATIONS OR OTHER CONSTRUCTION DOCUMENTS PREPARED BY LRL ASSOCIATES LTD. (LRL) WITHOUT OBTAINING LRL'S PRIOR WRITTEN CONSENT, THE CLIENT SHALL ASSUME FULL RESPONSIBILITY FOR THE RESULTS OF SUCH CHANGES. THEREFORE THE CLIENT AGREES TO WAIVE ANY CLAIM AGAINST LRL AND TO RELEASE LRL FROM ANY LIABILITY ARISING DIRECTLY OR INDIRECTLY FROM SUCH UNAUTHORIZED CHANGES.

IN ADDITION, THE CLIENT AGREES, TO THE FULLEST EXTENT PERMITTED BY LAW, TO INDEMNIFY AND HOLD HARMLESS LRL FROM ANY DAMAGES, LIABILITIES OR COST, INCLUDING REASONABLE ATTORNEY'S FEES AND COST OF DEFENSE, ARISING FROM SUCH CHANGES.

IN ADDITION, THE CLIENT AGREES TO INCLUDE IN ANY CONTRACTS FOR CONSTRUCTION APPROPRIATE LANGUAGE THAT PROHIBITS THE CONTRACTOR OR ANY SUBCONTRACTORS OF ANY TIER FROM MAKING ANY CHANGES OR MODIFICATIONS TO LRL'S CONSTRUCTION DOCUMENTS WITHOUT THE PRIOR WRITTEN APPROVAL OF LRL AND THAT FURTHER REQUIRES THE CONTRACTOR TO INDEMNIFY BOTH LRL AND THE CLIENT FROM ANY LIABILITY OR COST ARISING FROM SUCH CHANGES MADE WITHOUT SUCH PROPER AUTHORIZATION.

GENERAL NOTES:

EXISTING SERVICES AND UTILITIES SHOWN ON THESE DRAWINGS ARE TAKEN FROM THE BEST AVAILABLE RECORDS, BUT MAY NOT BE COMPLETE OR TO DATE. CONTRACTOR SHALL VERIFY IN FIELD FOR LOCATION AND ELEVATION OF PIPES AND CHECK WITH THE UTILITY COMPANIES BEFORE DIGGING OR PERFORMING WORK.

CONTRACTOR IS ADVISED TO COLLECT INFORMATION ON SOIL CONDITIONS BEFORE START OF CONSTRUCTION.

THE ENGINEER WAIVES ANY AND ALL RESPONSIBILITY AND LIABILITY FOR PROBLEMS WHICH ARISE FROM FAILURE TO FOLLOW THESE PLANS, SPECIFICATIONS AND THE DESIGN INTENT THEY CONVEY, OR FOR PROBLEMS WHICH ARISE FROM OTHERS' FAILURE TO OBTAIN AND/OR FOLLOW THE ENGINEER'S GUIDANCE WITH RESPECT TO ANY ERRORS, OMISSIONS, INCONSISTENCIES AMBIGUITIES OR CONFLICTS WHICH ARE ALLEGED.

CONTRACTOR TO VERIFY ALL DIMENSIONS AND NOTIFY THE ENGINEER OF ANY DISCREPANCIES BEFORE WORK COMMENCES. DO NOT SCALE DRAWINGS.

SUBJECT TO APPROVAL

No.	REVISIONS	BY	DATE
04	ISSUED FOR APPROVAL	M.L.	26 JAN 2026
03	ISSUED FOR APPROVAL	M.L.	26 NOV 2025
02	ISSUED FOR APPROVAL	M.L.	03 NOV 2025
01	ISSUED FOR APPROVAL	M.L.	21 AUG 2025

LICENSED PROFESSIONAL ENGINEER
M. BASNET
100501996
PROVINCE OF ONTARIO

NOT AUTHENTIC UNLESS SIGNED AND DATED

LRL
ENGINEERING | INGÉNIERIE
5430 Canotek Road I Ottawa, ON, K1J 9G2
www.lrl.ca I (613) 842-3434

CLIENT
SCALIA

DESIGNED BY:	DRAWN BY:	APPROVED BY:
M.L.	M.L.	M.B.

PROJECT
MIXED USE APARTMENT DEVELOPMENT
6310 HAZELDEAN ROAD
OTTAWA, ON

DRAWING TITLE
CONSTRUCTION DETAIL PLAN

PROJECT NO.
220027
C901

D07-12-25-0121

19408

APPENDIX F

Sanitary Calculations

LRL Associates Ltd.

Sanitary Sewer Design Sheet

LRL File No.: 220027
Project: Mixed Use Apartment Development
Location: 6310 Hazeldean Road
Designed: ML
Checked: MB
Date: January 26, 2026
DWG. Reference: C401

Sanitary Design Parameters

Commercial & Institutional Flow = 28000 L/ha/day
Light Industrial Flow = 35000 L/ha/day
Heavy Industrial Flow = 55000 L/ha/day
Maximum Residential Peak Factor = 4.0
Commercial & Institutional Peak Factor = 1
Average Daily Flow = 280 L/p/day
Industrial Peak Factor = as per Appendix 4-B
Extraneous Flow = 0.33 L/s/ha

Pipe Design Parameters

Maximum Velocity = 3.00 m/s
Minimum Velocity = 0.60 m/s
Manning's n = 0.013

LOCATION			RESIDENTIAL						COMMERCIAL		INDUSTRIAL			INSTITUTIONAL		C+I+I	INFILTRATION			TOTAL FLOW, Q	PIPE								
STREET/SITE	FROM	TO	AREA	POP.	ACCU. AREA	ACCU. POP.	PEAK FACT.	PEAK FLOW	AREA	ACCU. AREA	AREA	ACCU. AREA	PEAK FACT.	AREA	ACCU. AREA	PEAK FLOW	TOTAL AREA	ACCU. AREA	INFILT. FLOW		LENGTH	DIA.	SLOPE	MATERIAL	CAP. Q_{FULL}	VEL. V_{FULL}	RATIO Q/Q_{FULL}	RATIO V_{ACT}/V_{FULL}	VEL. V_{ACT}
			(Ha)		(Ha)			(L/s)	(Ha)	(Ha)		(Ha)		(Ha)	(Ha)	(L/s)	(Ha)	(Ha)	(L/s)	(L/s)	(m)	(mm)	(%)		(L/s)	(m/s)			
Site	BLDG /STUB	SAN MH01	1.104	819	1.104	819	3.4	9.02	1.070	1.070						0.35	1.104	1.104	0.36	9.73	1.1	375	2.00%	PVC	247.95	2.25	0.039	0.50	1.11
Site	SAN MH01	SAN MH02																		9.73	117.6	375	1.00%	PVC	175.33	1.59	0.055	0.54	0.85
Easement	SAN MH02	Ex. SAN																		9.73	3.0	375	1.00%	PVC	175.33	1.59	0.055	0.54	0.85

Notes: Existing inverts and slopes are estimated. They are to be confirmed on-site.

APPENDIX G

Stormwater Management Design Calculations

LRL Associates Ltd.

Storm Watershed Summary

LRL File No. 220027
Project: Mixed Use Apartment Development
Location: 6310 Hazeldean Road
Date: January 26, 2026
Designed: Maxime Longtin
Checked: Mohan Basnet
Dwg Reference: C701, C702

Pre-Development Catchments

Catchment	C = 0.20	C = 0.80	C = 0.90	Total Area (ha)	Combined C
ECA-01 (uncontrolled)	0.189	0.900	0.016	1.104	0.70
Total	**0.189**	**0.900**	**0.016**	**1.104**	**0.70**

Post-Development Catchments

Catchment	C = 0.20	C = 0.8	C = 0.90	Total Area (ha)	Combined C
CA-01 (controlled)	0.000	0.000	0.497	0.497	0.90
CA-02A (controlled)	0.002	0.000	0.004	0.005	0.68
CA-02B (controlled)	0.002	0.000	0.003	0.005	0.66
CA-02C (controlled)	0.001	0.000	0.003	0.004	0.72
CA-02D (controlled)	0.005	0.000	0.004	0.009	0.53
CA-02E (controlled)	0.004	0.000	0.004	0.008	0.52
CA-02F (controlled)	0.005	0.000	0.004	0.009	0.52
CA-02G (controlled)	0.005	0.000	0.003	0.009	0.47
CA-03 (controlled)	0.013	0.000	0.152	0.165	0.84
CA-04 (controlled)	0.005	0.000	0.007	0.011	0.62
CA-05 (controlled)	0.006	0.000	0.041	0.047	0.81
CA-06 (controlled)	0.002	0.000	0.071	0.072	0.88
CA-07 (controlled)	0.000	0.000	0.035	0.035	0.90
CA-08 (controlled)	0.002	0.000	0.030	0.032	0.86
CA-09 (controlled)	0.002	0.000	0.019	0.021	0.84
CA-10 (controlled)	0.005	0.000	0.012	0.017	0.68
CA-11 (controlled)	0.069	0.000	0.019	0.088	0.35
CA-12 (uncontrolled)	0.054	0.000	0.000	0.054	0.20
CA-13 (uncontrolled)	0.000	0.000	0.017	0.017	0.90
Total	**0.181**	**0.000**	**0.923**	**1.104**	**0.79**

LRL File No.	220027
Project:	Mixed Use Apartment Development
Location:	6310 Hazeldean Road
Date:	January 26, 2026
Designed:	Maxime Longtin
Checked:	Mohan Basnet
Drawing Ref.:	C601

Stormwater Management Design Sheet

STORM - 100 YEAR

Runoff Equation

Q = 2.78CIA (L/s)

C = Runoff coefficient

I = Rainfall intensity (mm/hr) = $A / (T_d + C)^B$

A = Area (ha)

T_d = Time of duration (min)

Pre-Development Release Rate

IDF Curve Equations

$I_{100} = 1735.688 / (Td + 6.014)^{0.820}$ A = 1735.688 B = 0.820 C = 6.014

C =	0.50	(max of 0.5 as per City Guidelines)	
I_{100} =	178.6	mm/hr	
T_d =	10	min	
A =	1.10	ha	
100 Year Release Rate =	274.08	L/s	
Allowable Release Rate =	159.93	L/s	(5 Year Pre-development Release Rate)

Post-development Stormwater Management

					$\sum R_{2\&5}$	$\sum R_{100}$
	Total Site Area =	**1.104**	**ha**	**∑R =**	**0.79**	**0.98**
	CA-01 (controlled)	0.497	ha	R =	0.90	1.00
	CA-02A (controlled)	0.005	ha	R =	0.68	0.86
	CA-02B (controlled)	0.005	ha	R =	0.66	0.82
	CA-02C (controlled)	0.004	ha	R =	0.72	0.89
	CA-02D (controlled)	0.009	ha	R =	0.53	0.66
	CA-02E (controlled)	0.008	ha	R =	0.52	0.65
	CA-02F (controlled)	0.009	ha	R =	0.52	0.65
	CA-02G (controlled)	0.009	ha	R =	0.47	0.59
	CA-03 (controlled)	0.165	ha	R =	0.84	1.00
	CA-04 (controlled)	0.011	ha	R =	0.62	0.77
	CA-05 (controlled)	0.047	ha	R =	0.81	1.00
	CA-06 (controlled)	0.072	ha	R =	0.88	1.00
	CA-07 (controlled)	0.035	ha	R =	0.90	1.00
	CA-08 (controlled)	0.032	ha	R =	0.86	1.00
	CA-09 (controlled)	0.021	ha	R =	0.84	1.00
	CA-10 (controlled)	0.017	ha	R =	0.68	0.85
	CA-11 (controlled)	0.088	ha	R =	0.35	0.44
	Total (controlled)	**1.034**	**ha**	**R =**	**0.81**	**1.00**
	CA-12 (uncontrolled)	0.054	ha	R =	0.20	0.25
	CA-13 (uncontrolled)	0.017	ha	R =	0.90	1.00
	Total (uncontrolled)	**0.071**	**ha**	**R =**	**0.36**	**0.45**

100 Year Post-development Stormwater Management

Time (min)	Intensity (mm/hr)	Controlled Runoff (L/s)	Storage Volume (m^3)	*Controlled Release Rate (L/s)	Uncontrolled Runoff (L/s)	Total Release Rate (L/s)
10	178.56	513.02	264.62	71.99	15.95	87.94
15	142.89	410.55	304.71	71.99	12.77	84.76
20	119.95	344.63	327.17	71.99	10.72	82.71
25	103.85	298.37	339.56	71.99	9.28	81.27
30	91.87	263.95	345.53	71.99	8.21	80.20
35	82.58	237.26	347.06	71.99	7.38	79.37
40	75.15	215.90	345.39	71.99	6.71	78.70
45	69.05	198.39	341.28	71.99	6.17	78.16
50	63.95	183.75	335.27	71.99	5.71	77.70
55	59.62	171.31	327.74	71.99	5.33	77.32
60	55.89	160.59	318.97	71.99	4.99	76.98
65	52.65	151.26	309.15	71.99	4.70	76.69
70	49.79	143.05	298.46	71.99	4.45	76.44
75	47.26	135.77	287.01	71.99	4.22	76.21
80	44.99	129.26	274.92	71.99	4.02	76.01
85	42.95	123.41	262.25	71.99	3.84	75.83
90	41.11	118.12	249.08	71.99	3.67	75.66
95	39.43	113.30	235.47	71.99	3.52	75.51
100	37.90	108.90	221.46	71.99	3.39	75.38
105	36.50	104.86	207.09	71.99	3.26	75.25
110	35.20	101.14	192.39	71.99	3.15	75.14
115	34.01	97.70	177.41	71.99	3.04	75.03
120	32.89	94.51	162.15	71.99	2.94	74.93

*Average release rate taken at 50% of maximum release rate to account for underground storage calculation

On-site stormwater detention

Storage required =	**347.06**	**m^3**	
Storage provided =	**351.00**	**m^3**	(Refer to DWG C601)

LRL File No. 220027
Project: Mixed Use Apartment Development
Location: 6310 Hazeldean Road
Date: January 26, 2026
Designed: Maxime Longtin
Checked: Mohan Basnet
Drawing Ref.: C601

Stormwater Management Design Sheet

STORM - 5 YEAR

Runoff Equation

Q = 2.78CIA (L/s)
C = Runoff coefficient
I = Rainfall intensity (mm/hr) = $A / (T_d + C)^B$
A = Area (ha)
T_d = Time of duration (min)

Pre-Development Release Rate

IDF Curve Equations

$I_5 = 998.071 / (Td + 6.053)^{0.814}$ A = 998.071 B = 0.814 C = 6.053

C =	0.50	(max of 0.5 as per City Guidelines)
I_5 =	104.2	mm/hr
T_d =	10	min
A =	1.10	ha
5 Year Release Rate =	159.93	L/s

Post-development Stormwater Management

					$\sum R_{2\&5}$
	Total Site Area =	**1.104**	**ha**	**∑R =**	**0.79**
	CA-01 (controlled)	0.497	ha	R =	0.90
	CA-02A (controlled)	0.005	ha	R =	0.68
	CA-02B (controlled)	0.005	ha	R =	0.66
	CA-02C (controlled)	0.004	ha	R =	0.72
	CA-02D (controlled)	0.009	ha	R =	0.53
	CA-02E (controlled)	0.008	ha	R =	0.52
	CA-02F (controlled)	0.009	ha	R =	0.52
	CA-02G (controlled)	0.009	ha	R =	0.47
	CA-03 (controlled)	0.165	ha	R =	0.84
	CA-04 (controlled)	0.011	ha	R =	0.62
	CA-05 (controlled)	0.047	ha	R =	0.81
	CA-06 (controlled)	0.072	ha	R =	0.88
	CA-07 (controlled)	0.035	ha	R =	0.90
	CA-08 (controlled)	0.032	ha	R =	0.86
	CA-09 (controlled)	0.021	ha	R =	0.84
	CA-10 (controlled)	0.017	ha	R =	0.68
	CA-11 (controlled)	0.088	ha	R =	0.35
	Total (controlled)	**1.034**	**ha**	**R =**	**0.81**
	CA-12 (uncontrolled)	0.054	ha	R =	0.20
	CA-13 (uncontrolled)	0.017	ha	R =	0.90
	Total (uncontrolled)	**0.071**	**ha**	**R =**	**0.36**

5 Year Post-development Stormwater Management

Time (min)	Intensity (mm/hr)	Controlled Runoff (L/s)	Storage Volume (m^3)	*Controlled Release Rate (L/s)	Uncontrolled Runoff (L/s)	Total Release Rate (L/s)
10	104.19	243.65	103.00	71.99	7.45	79.44
15	83.56	195.40	111.07	71.99	5.97	77.96
20	70.25	164.28	110.75	71.99	5.02	77.01
25	60.90	142.40	105.62	71.99	4.35	76.34
30	53.93	126.11	97.41	71.99	3.85	75.84
35	48.52	113.46	87.08	71.99	3.47	75.46
40	44.18	103.32	75.20	71.99	3.16	75.15
45	40.63	95.01	62.15	71.99	2.90	74.89
50	37.65	88.05	48.18	71.99	2.69	74.68
55	35.12	82.14	33.48	71.99	2.51	74.50
60	32.94	77.04	18.17	71.99	2.35	74.35
65	31.04	72.60	2.36	71.99	2.22	74.21
70	29.37	68.69	0.00	71.99	2.10	74.09
75	27.89	65.22	0.00	71.99	1.99	73.98
80	26.56	62.11	0.00	71.99	1.90	73.89
85	25.37	59.32	0.00	71.99	1.81	73.80
90	24.29	56.80	0.00	71.99	1.74	73.73
95	23.31	54.50	0.00	71.99	1.67	73.66
100	22.41	52.40	0.00	71.99	1.60	73.59
105	21.58	50.47	0.00	71.99	1.54	73.53
110	20.82	48.69	0.00	71.99	1.49	73.48
115	20.12	47.05	0.00	71.99	1.44	73.43
120	19.47	45.52	0.00	71.99	1.39	73.38

*Average release rate taken at 50% of maximum release rate to account for underground storage calculation

On-site stormwater detention

Storage required = 111.07 m^3

LRL Associates Ltd.

Storm Sewer Design Sheet

LRL File No. 220027
Project: Mixed Use Apartment Development
Location: 6310 Hazeldean Road
Date: January 26, 2026
Designed: Maxime Longtin
Checked: Mohan Basnet
Dwg. Ref.: C401,C702

Rational Method

Q = 2.78CIA
Q = Peak flow (L/s)
A = Drainage area (ha)
C = Runoff coefficient
I = Rainfall intensity (mm/hr)

Runoff coefficient (C)

Grass = 0.2
Gravel = 0.8
Asphalt / rooftop = 0.9

IDF curve

Ottawa Macdonald-Cartier International Airport
Storm event: 5 Years

Intensity equation:

$I_5 = 998.071 / (Td + 6.053)^{0.814}$ (mm/hr)

Pipe Design Parameters

Minimum velocity = 0.80 m/s
Manning's "n" = 0.013

LOCATION			AREA (ha)			FLOW						STORM SEWER							
WATERSHED / STREET	From MH	To MH	C = 0.20	C = 0.80	C = 0.90	Indiv. 2.78AC	Accum. 2.78AC	Time of Conc.	Rainfall Intensity	Peak Flow (Q)	Controlled Flow (Q)	Pipe Dia.	Type	Slope	Length	Capacity Full (Q_{FULL})	Velocity Full	Time of Flow	Ratio Q/Q_{FULL}
								(min)	(mm/hr)	(L/s)	(L/s)	(mm)		(%)	(m)	(L/s)	(m/s)	(min)	
CA-01 to CA-11	STM MH04	Ex. Ditch	0.127	0.000	0.906	2.34	2.34	10.00	104.19	243.65	143.98	375	PVC	1.00%	8.6	175.33	1.59	0.09	0.82

LRL File No.	220027
Project:	Mixed Use Apartment Development
Location:	6310 Hazeldean Road
Date:	January 26, 2026
Designed:	MB
Drawing Ref.:	C401

Orifice Equation

$$Q = C_d\, A \sqrt{2gH}$$

Where:

Q = discharge (m^3/s)
C_d = coefficient of discharge (typical 0.61)
A = area of orifice (m^2)
g = acceleration due to gravity (= 9.81 m/s^2)
H = head above centreline of orifice

Orifice Dia (d) =	**227**	**mm**
A =	0.0405	m^2
C_d =	0.61	
g =	9.81	m/s^2
H =	1.73	m
Q =	143.68	L/s

Stormceptor®

Rinker MATERIALS® A QUIKRETE® COMPANY

Stormceptor® EF Sizing Report

Imbrium® Systems
ESTIMATED NET ANNUAL SEDIMENT (TSS) LOAD REDUCTION

08/07/2025

Province:	Ontario
City:	Ottawa
Nearest Rainfall Station:	OTTAWA CDA RCS
Climate Station Id:	6105978
Years of Rainfall Data:	20
Site Name:	6310 Hazeldean Road OGS
Drainage Area (ha):	0.22
Runoff Coefficient 'c':	0.84
Particle Size Distribution:	Fine
Target TSS Removal (%):	80.0
Required Water Quality Runoff Volume Capture (%):	90.00
Estimated Water Quality Flow Rate (L/s):	5.96
Oil / Fuel Spill Risk Site?	Yes
Upstream Flow Control?	No
Peak Conveyance (maximum) Flow Rate (L/s):	28.99
Influent TSS Concentration (mg/L):	200
Estimated Average Annual Sediment Load (kg/yr):	253
Estimated Average Annual Sediment Volume (L/yr):	206

Project Name:	Hazeldean Residential Towers
Project Number:	220027
Designer Name:	Jessica Steffler
Designer Company:	Forterra Pipe & Precast
Designer Email:	jessica.steffler@RinkerPipe.com
Designer Phone:	519-239-6958
EOR Name:	Maxime Longtin
EOR Company:	LRL Engineering
EOR Email:	mlongtin@lrl.ca
EOR Phone:	613-842-3434

Net Annual Sediment (TSS) Load Reduction Sizing Summary

Stormceptor Model	TSS Removal Provided (%)
EFO4	94
EFO5	96
EFO6	98
EFO8	99
EFO10	100
EFO12	100

Recommended Stormceptor EFO Model: EFO4

Estimated Net Annual Sediment (TSS) Load Reduction (%): 94

Water Quality Runoff Volume Capture (%): > 90

imbrium

THIRD-PARTY TESTING AND VERIFICATION

►**Stormceptor® EF and Stormceptor® EFO** are the latest evolutions in the Stormceptor® oil-grit separator (OGS) technology series, and are designed to remove a wide variety of pollutants from stormwater and snowmelt runoff. These technologies have been third-party tested in accordance with the Canadian ETV **Procedure for Laboratory Testing of Oil-Grit Separators** and performance has been third-party verified in accordance with the **ISO 14034 Environmental Technology Verification (ETV)** protocol.

PERFORMANCE

►**Stormceptor® EF and EFO** remove stormwater pollutants through gravity separation and floatation, and feature a patent-pending design that generates positive removal of total suspended solids (TSS) throughout each storm event, including high-intensity storms. Captured pollutants include sediment, free oils, and sediment-bound pollutants such as nutrients, heavy metals, and petroleum hydrocarbons. Stormceptor is sized to remove a high level of TSS from the frequent rainfall events that contribute the vast majority of annual runoff volume and pollutant load. The technology incorporates an internal bypass to convey excessive stormwater flows from high-intensity storms through the device without resuspension and washout (scour) of previously captured pollutants. Proper routine maintenance ensures high pollutant removal performance and protection of downstream waterways.

PARTICLE SIZE DISTRIBUTION (PSD)

►The **Canadian ETV PSD** shown in the table below was used, or in part, for this sizing. This is the identical PSD that is referenced in the Canadian ETV ***Procedure for Laboratory Testing of Oil-Grit Separators*** for both sediment removal testing and scour testing. The Canadian ETV PSD contains a wide range of particle sizes in the sand and silt fractions, and is considered reasonably representative of the particle size fractions found in typical urban stormwater runoff.

Particle Size (μm)	Percent Less Than	Particle Size Fraction (μm)	Percent
1000	100	500-1000	5
500	95	250-500	5
250	90	150-250	15
150	75	100-150	15
100	60	75-100	10
75	50	50-75	5
50	45	20-50	10
20	35	8-20	15
8	20	5-8	10
5	10	2-5	5
2	5	<2	5

Stormceptor® EF Sizing Report

Rainfall Intensity (mm / hr)	Percent Rainfall Volume (%)	Cumulative Rainfall Volume (%)	Flow Rate (L/s)	Flow Rate (L/min)	Surface Loading Rate (L/min/m²)	Removal Efficiency (%)	Incremental Removal (%)	Cumulative Removal (%)
0.50	8.6	8.6	0.26	15.0	13.0	100	8.6	8.6
1.00	20.3	29.0	0.51	31.0	26.0	100	20.3	29.0
2.00	16.2	45.2	1.03	62.0	51.0	100	16.2	45.2
3.00	12.0	57.2	1.54	92.0	77.0	100	12.0	57.2
4.00	8.4	65.6	2.05	123.0	103.0	96	8.1	65.3
5.00	5.9	71.6	2.57	154.0	128.0	93	5.6	70.8
6.00	4.6	76.2	3.08	185.0	154.0	89	4.1	75.0
7.00	3.1	79.3	3.60	216.0	180.0	86	2.6	77.6
8.00	2.7	82.0	4.11	247.0	205.0	83	2.3	79.9
9.00	3.3	85.3	4.62	277.0	231.0	82	2.7	82.6
10.00	2.3	87.6	5.14	308.0	257.0	81	1.9	84.4
11.00	1.6	89.2	5.65	339.0	283.0	79	1.2	85.7
12.00	1.3	90.5	6.16	370.0	308.0	78	1.0	86.7
13.00	1.7	92.2	6.68	401.0	334.0	77	1.3	88.1
14.00	1.2	93.5	7.19	432.0	360.0	76	0.9	89.0
15.00	1.2	94.6	7.71	462.0	385.0	75	0.9	89.8
16.00	0.7	95.3	8.22	493.0	411.0	73	0.5	90.4
17.00	0.7	96.1	8.73	524.0	437.0	72	0.5	90.9
18.00	0.4	96.5	9.25	555.0	462.0	71	0.3	91.2
19.00	0.4	96.9	9.76	586.0	488.0	70	0.3	91.5
20.00	0.2	97.1	10.27	616.0	514.0	69	0.1	91.6
21.00	0.5	97.5	10.79	647.0	539.0	67	0.3	91.9
22.00	0.2	97.8	11.30	678.0	565.0	66	0.2	92.1
23.00	1.0	98.8	11.82	709.0	591.0	65	0.7	92.7
24.00	0.3	99.1	12.33	740.0	616.0	65	0.2	92.9
25.00	0.0	99.1	12.84	771.0	642.0	64	0.0	92.9
30.00	0.9	100.0	15.41	925.0	771.0	63	0.6	93.5
35.00	0.0	100.0	17.98	1079.0	899.0	62	0.0	93.5
40.00	0.0	100.0	20.55	1233.0	1027.0	61	0.0	93.5
45.00	0.0	100.0	23.12	1387.0	1156.0	58	0.0	93.5
Estimated Net Annual Sediment (TSS) Load Reduction =								**94 %**

Climate Station ID: 6105978 *Years of Rainfall Data*: 20

RAINFALL DATA FROM OTTAWA CDA RCS RAINFALL STATION

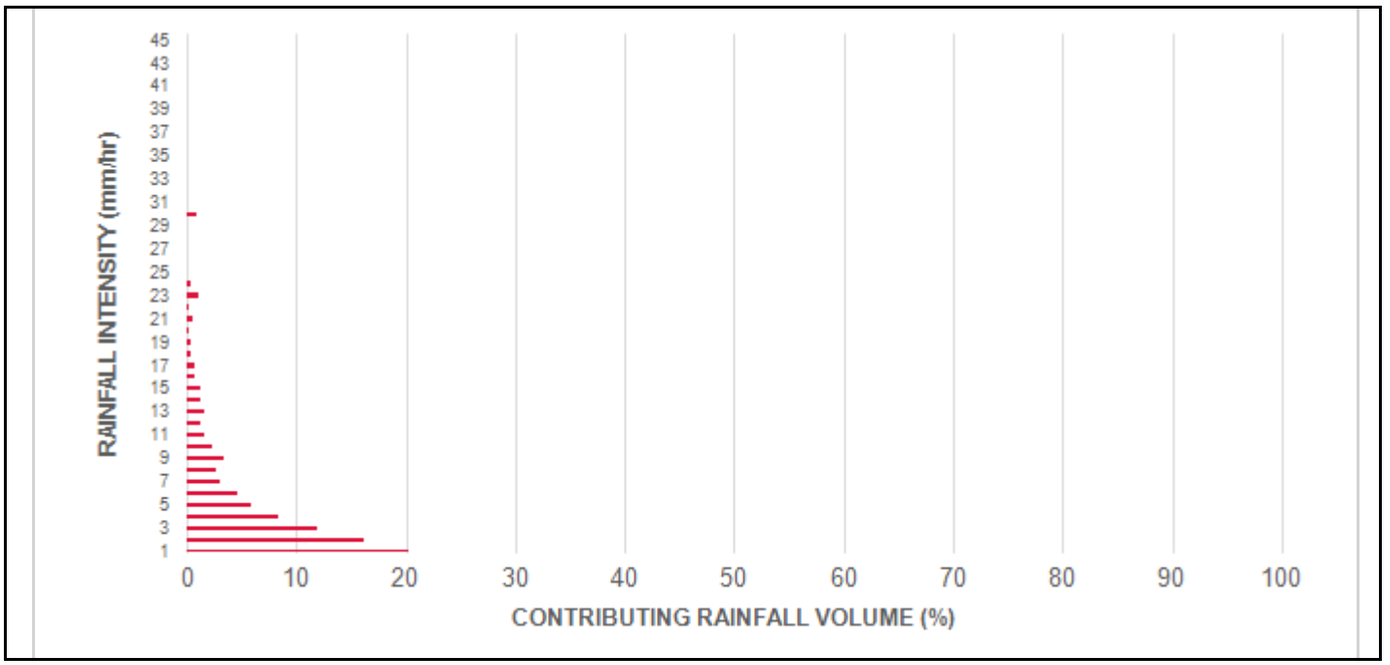

INCREMENTAL AND CUMULATIVE TSS REMOVAL FOR THE RECOMMENDED STORMCEPTOR® MODEL

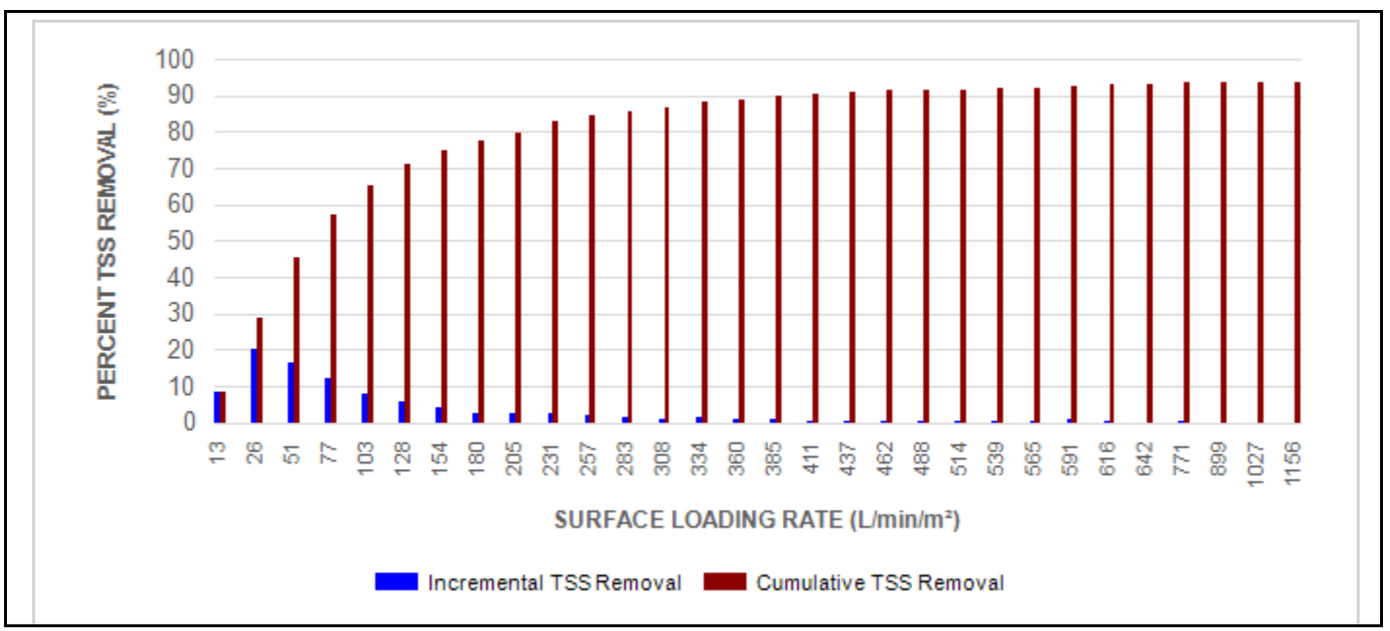

Maximum Pipe Diameter / Peak Conveyance

Stormceptor EF / EFO	Model Diameter		Min Angle Inlet / Outlet Pipes	Max Inlet Pipe Diameter		Max Outlet Pipe Diameter		Peak Conveyance Flow Rate	
	(m)	(ft)		(mm)	(in)	(mm)	(in)	(L/s)	(cfs)
EF4 / EFO4	1.2	4	90	609	24	609	24	425	15
EF5 / EFO5	1.5	5	90	762	30	762	30	710	25
EF6 / EFO6	1.8	6	90	914	36	914	36	990	35
EF8 / EFO8	2.4	8	90	1219	48	1219	48	1700	60
EF10 / EFO10	3.0	10	90	1828	72	1828	72	2830	100
EF12 / EFO12	3.6	12	90	1828	72	1828	72	2830	100

SCOUR PREVENTION AND ONLINE CONFIGURATION

►**Stormceptor® EF and EFO** feature an internal bypass and superior scour prevention technology that have been demonstrated in third-party testing according to the scour testing provisions of the Canadian ETV **Procedure for Laboratory Testing of Oil-Grit Separators**, and the exceptional scour test performance has been third-party verified in accordance with the ISO 14034 ETV protocol. As a result, Stormceptor EF and EFO are approved for online installation, eliminating the need for costly additional bypass structures, piping, and installation expense.

DESIGN FLEXIBILITY

►**Stormceptor® EF** and **EFO** offers design flexibility in one simplified platform, accepting stormwater flow from a single inlet pipe or multiple inlet pipes, and/or surface runoff through an inlet grate. The device can also serve as a junction structure, accommodate a 90-degree inlet-to-outlet bend angle, and can be modified to ensure performance in submerged conditions.

OIL CAPTURE AND RETENTION

►While Stormceptor® EF will capture and retain oil from dry weather spills and low intensity runoff, **Stormceptor® EFO** has demonstrated superior oil capture and greater than 99% oil retention in third-party testing according to the light liquid re-entrainment testing provisions of the Canadian ETV **Procedure for Laboratory Testing of Oil-Grit Separators**. Stormceptor EFO is recommended for sites where oil capture and retention is a requirement.

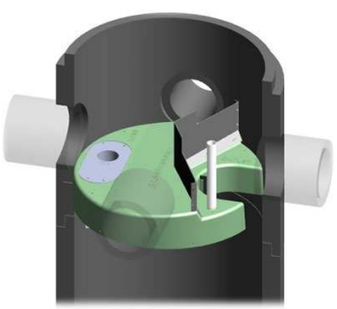

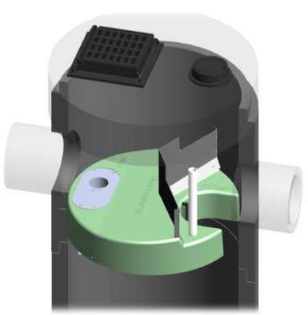

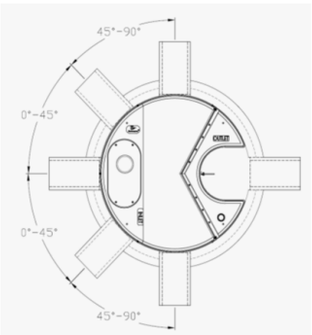

INLET-TO-OUTLET DROP

Elevation differential between inlet and outlet pipe inverts is dictated by the angle at which the inlet pipe(s) enters the unit.

0° - 45° : The inlet pipe is 1-inch (25mm) higher than the outlet pipe.

45° - 90° : The inlet pipe is 2-inches (50mm) higher than the outlet pipe.

HEAD LOSS

The head loss through Stormceptor EF is similar to that of a 60-degree bend structure. The applicable K value for calculating minor losses through the unit is 1.1. For submerged conditions the applicable K value is 3.0.

Pollutant Capacity

Stormceptor EF / EFO	Model Diameter		Depth (Outlet Pipe Invert to Sump Floor)		Oil Volume		Recommended Sediment Maintenance Depth *		Maximum Sediment Volume *		Maximum Sediment Mass **	
	(m)	(ft)	(m)	(ft)	(L)	(Gal)	(mm)	(in)	(L)	(ft^3)	(kg)	(lb)
EF4 / EFO4	1.2	4	1.52	5.0	265	70	203	8	1190	42	1904	5250
EF5 / EFO5	1.5	5	1.62	5.3	420	111	305	10	2124	75	2612	5758
EF6 / EFO6	1.8	6	1.93	6.3	610	160	305	12	3470	123	5552	15375
EF8 / EFO8	2.4	8	2.59	8.5	1070	280	610	24	8780	310	14048	38750
EF10 / EFO10	3.0	10	3.25	10.7	1670	440	610	24	17790	628	28464	78500
EF12 / EFO12	3.6	12	3.89	12.8	2475	655	610	24	31220	1103	49952	137875

*Increased sump depth may be added to increase sediment storage capacity

** Average density of wet packed sediment in sump = 1.6 kg/L (100 lb/ft^3)

Feature	Benefit	Feature Appeals To
Patent-pending enhanced flow treatment and scour prevention technology	Superior, verified third-party performance	Regulator, Specifying & Design Engineer
Third-party verified light liquid capture and retention for EFO version	Proven performance for fuel/oil hotspot locations	Regulator, Specifying & Design Engineer, Site Owner
Functions as bend, junction or inlet structure	Design flexibility	Specifying & Design Engineer
Minimal drop between inlet and outlet	Site installation ease	Contractor
Large diameter outlet riser for inspection and maintenance	Easy maintenance access from grade	Maintenance Contractor & Site Owner

STANDARD STORMCEPTOR EF/EFO DRAWINGS

For standard details, please visit http://www.imbriumsystems.com/stormwater-treatment-solutions/stormceptor-ef

STANDARD STORMCEPTOR EF/EFO SPECIFICATION

For specifications, please visit http://www.imbriumsystems.com/stormwater-treatment-solutions/stormceptor-ef

STANDARD PERFORMANCE SPECIFICATION FOR "OIL GRIT SEPARATOR" (OGS) STORMWATER QUALITY TREAMENT DEVICE

PART 1 – GENERAL

1.1 WORK INCLUDED

This section specifies requirements for selecting, sizing, and designing an underground Oil Grit Separator (OGS) device for stormwater quality treatment, with third-party testing results and a Statement of Verification in accordance with ISO 14034 Environmental Management – Environmental Technology Verification (ETV).

1.2 REFERENCE STANDARDS & PROCEDURES

ISO 14034:2016 Environmental management – Environmental technology verification (ETV)

Canadian Environmental Technology Verification (ETV) Program's **Procedure for Laboratory Testing of Oil-Grit Separators**

1.3 SUBMITTALS

1.3.1 All submittals, including sizing reports & shop drawings, shall be submitted upon request with each order to the contractor then forwarded to the Engineer of Record for review and acceptance. Shop drawings shall detail all OGS components, elevations, and sequence of construction.

1.3.2 Alternative devices shall have features identical to or greater than the specified device, including: treatment chamber diameter, treatment chamber wet volume, sediment storage volume, and oil storage volume.

1.3.3 Unless directed otherwise by the Engineer of Record, OGS stormwater quality treatment product substitutions or alternatives submitted within ten days prior to project bid shall not be accepted. All alternatives or substitutions submitted shall be signed and sealed by a local registered Professional Engineer, based on the exact same criteria detailed in Section 3, in entirety, subject to review and approval by the Engineer of Record.

PART 2 – PRODUCTS

2.1 OGS POLLUTANT STORAGE

The OGS device shall include a sump for sediment storage, and a protected volume for the capture and storage of petroleum hydrocarbons and buoyant gross pollutants. The minimum sediment & petroleum hydrocarbon storage capacity shall be as follows:

2.1.1	4 ft (1219 mm) Diameter OGS Units:	1.19 m^3 sediment / 265 L oil
	5 ft (1524 mm) Diameter OGS Units:	1.95 m^3 sediment / 420 L oil
	6 ft (1829 mm) Diameter OGS Units:	3.48 m^3 sediment / 609 L oil
	8 ft (2438 mm) Diameter OGS Units:	8.78 m^3 sediment / 1,071 L oil

10 ft (3048 mm) Diameter OGS Units:	17.78 m^3 sediment / 1,673 L oil
12 ft (3657 mm) Diameter OGS Units:	31.23 m^3 sediment / 2,476 L oil

PART 3 – PERFORMANCE & DESIGN

3.1 GENERAL

The OGS stormwater quality treatment device shall be verified in accordance with ISO 14034:2016 Environmental management – Environmental technology verification (ETV). The OGS stormwater quality treatment device shall remove oil, sediment and gross pollutants from stormwater runoff during frequent wet weather events, and retain these pollutants during less frequent high flow wet weather events below the insert within the OGS for later removal during maintenance. The Manufacturer shall have at least ten (10) years of local experience, history and success in engineering design, manufacturing and production and supply of OGS stormwater quality treatment device systems, acceptable to the Engineer of Record.

3.2 SIZING METHODOLOGY

The OGS device shall be engineered, designed and sized to provide stormwater quality treatment based on treating a minimum of 90 percent of the average annual runoff volume and a minimum removal of an annual average 60% of the sediment (TSS) load based on the Particle Size Distribution (PSD) specified in the sizing report for the specified device. Sizing of the OGS shall be determined by use of a minimum ten (10) years of local historical rainfall data provided by Environment Canada. Sizing shall also be determined by use of the sediment removal performance data derived from the ISO 14034 ETV third-party verified laboratory testing data from testing conducted in accordance with the Canadian ETV protocol Procedure for Laboratory Testing of Oil-Grit Separators, as follows:

3.2.1 Sediment removal efficiency for a given surface loading rate and its associated flow rate shall be based on sediment removal efficiency demonstrated at the seven (7) tested surface loading rates specified in the protocol, ranging 40 L/min/m^2 to 1400 L/min/m^2, and as stated in the ISO 14034 ETV Verification Statement for the OGS device.

3.2.2 Sediment removal efficiency for surface loading rates between 40 L/min/m^2 and 1400 L/min/m^2 shall be based on linear interpolation of data between consecutive tested surface loading rates.

3.2.3 Sediment removal efficiency for surface loading rates less than the lowest tested surface loading rate of 40 L/min/m^2 shall be assumed to be identical to the sediment removal efficiency at 40 L/min/m^2. No extrapolation shall be allowed that results in a sediment removal efficiency that is greater than that demonstrated at 40 L/min/m^2.

3.2.4 Sediment removal efficiency for surface loading rates greater than the highest tested surface loading rate of 1400 L/min/m^2 shall assume zero sediment removal for the portion of flow that exceeds 1400 L/min/m^2, and shall be calculated using a simple proportioning formula, with 1400 L/min/m^2 in the numerator and the higher surface loading rate in the denominator, and multiplying the resulting fraction times the sediment removal efficiency at 1400 L/min/m^2.

The OGS device shall also have sufficient annual sediment storage capacity as specified and calculated in Section 2.1.

3.3 CANADIAN ETV or ISO 14034 ETV VERIFICATION OF SCOUR TESTING

The OGS device shall have Canadian ETV or ISO 14034 ETV Verification of third-party scour testing conducted in accordance with the Canadian ETV Program's **Procedure for Laboratory Testing of Oil-Grit Separators.**

3.3.1 To be acceptable for on-line installation, the OGS device must demonstrate an average scour test effluent concentration less than 10 mg/L at each surface loading rate tested, up to and including 2600 L/min/m^2.

3.4 LIGHT LIQUID RE-ENTRAINMENT SIMULATION TESTING

The OGS device shall have Canadian ETV or ISO 14034 ETV Verification of completed third-party Light Liquid Re-entrainment Simulation Testing in accordance with the Canadian ETV **Program's Procedure for Laboratory Testing of Oil-Grit Separators,** with results reported within the Canadian ETV or ISO 14034 ETV verification. This re-entrainment testing is conducted with the device pre-loaded with low density polyethylene (LDPE) plastic beads as a surrogate for light liquids such as oil and fuel. Testing is conducted on the same OGS unit tested for sediment removal to assess whether light liquids captured after a spill are effectively retained at high flow rates.

3.4.1 For an OGS device to be an acceptable stormwater treatment device on a site where vehicular traffic occurs and the potential for an oil or fuel spill exists, the OGS device must have reported verified performance results of greater than 99% cumulative retention of LDPE plastic beads for the five specified surface loading rates (ranging 200 L/min/m^2 to 2600 L/min/m^2) in accordance with the Light Liquid Re-entrainment Simulation Testing within the Canadian ETV Program's **Procedure for Laboratory Testing of Oil-Grit Separators.** However, an OGS device shall not be allowed if the Light Liquid Re-entrainment Simulation Testing was performed with screening components within the OGS device that are effective at retaining the LDPE plastic beads, but would not be expected to retain light liquids such as oil and fuel.

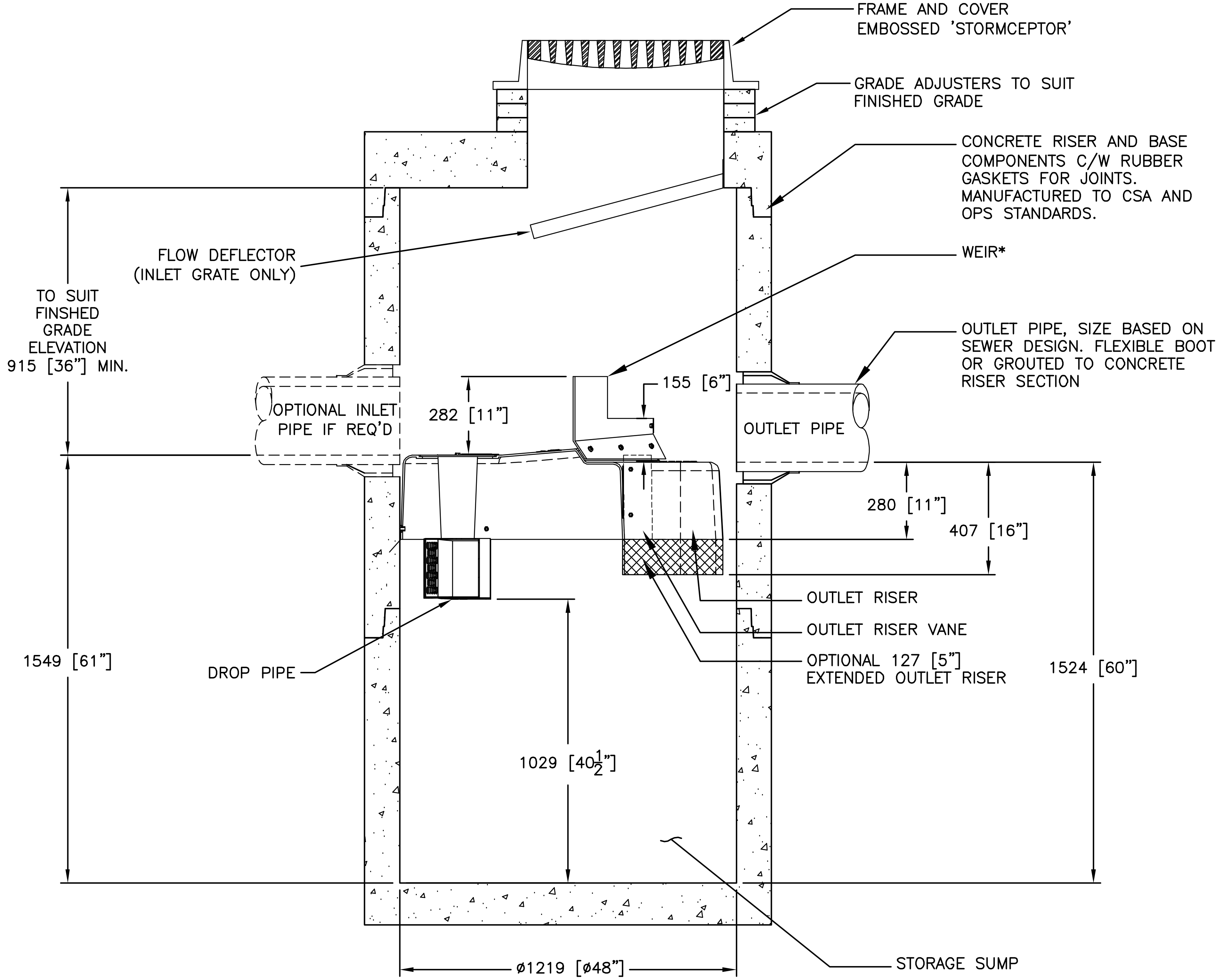

SECTION VIEW

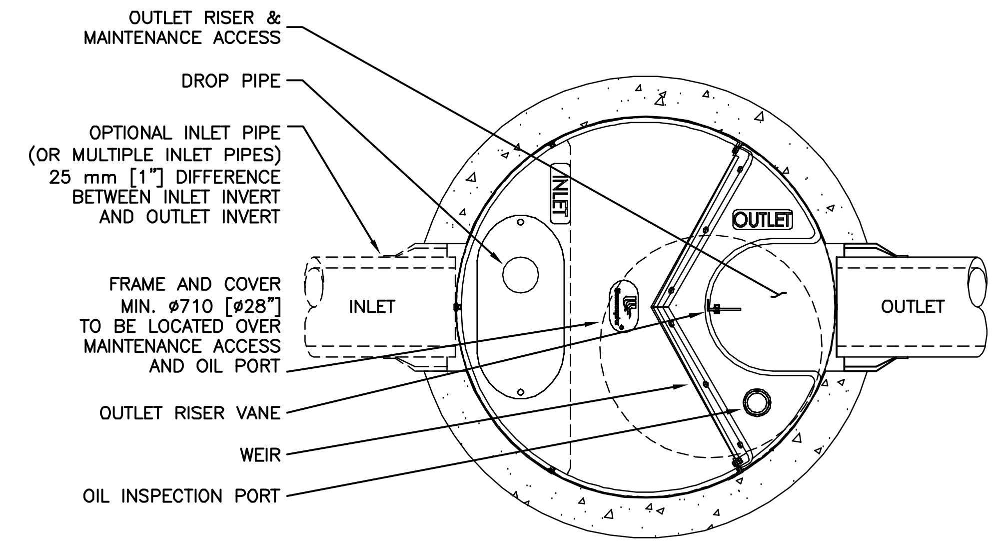

PLAN VIEW (STANDARD)

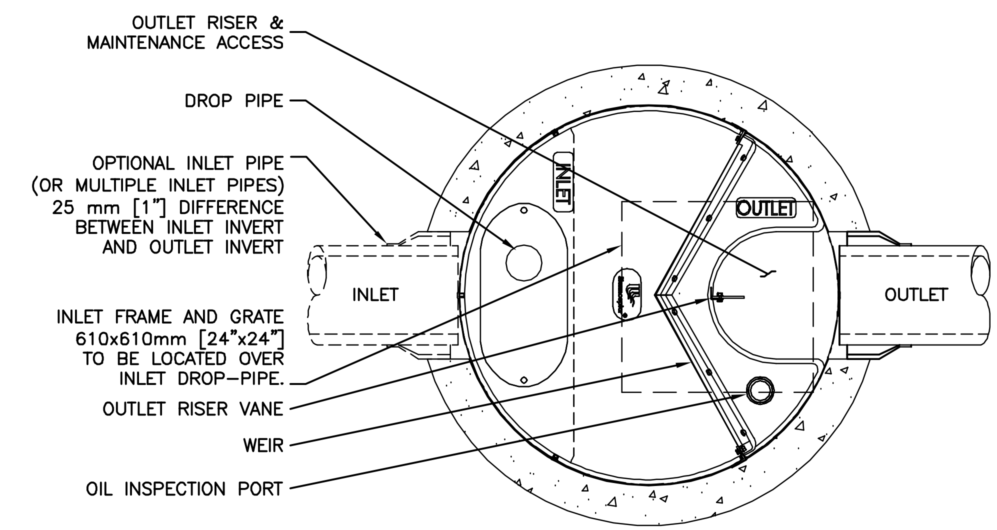

PLAN VIEW (INLET TOP)

FOR SITE SPECIFIC DRAWINGS PLEASE CONTACT YOUR LOCAL STORMCEPTOR REPRESENTATIVE. SITE SPECIFIC DRAWINGS ARE BASED ON THE BEST AVAILABLE INFORMATION AT THE TIME. SOME FIELD REVISIONS TO THE SYSTEM LOCATION OR CONNECTION PIPING MAY BE NECESSARY BASED ON AVAILABLE SPACE OR SITE CONFIGURATION REVISIONS. ELEVATIONS SHOULD BE MAINTAINED EXCEPT WHERE NOTED ON BYPASS STRUCTURE (IF REQUIRED).

GENERAL NOTES:

* MAXIMUM SURFACE LOADING RATE (SLR) INTO LOWER CHAMBER THROUGH DROP PIPE IS 1135 L/min/m^2 (27.9 gpm/ft^2) FOR STORMCEPTOR EF4 AND 535 L/min/m^2 (13.1 gpm/ft^2) FOR STORMCEPTOR EFO4 (OIL CAPTURE CONFIGURATION). WEIR HEIGHT IS 150 mm (6 INCH) FOR EF04.

1. ALL DIMENSIONS INDICATED ARE IN MILLIMETERS (INCHES) UNLESS OTHERWISE SPECIFIED.
2. STORMCEPTOR STRUCTURE INLET AND OUTLET PIPE SIZE AND ORIENTATION SHOWN FOR INFORMATIONAL PURPOSES ONLY.
3. UNLESS OTHERWISE NOTED, BYPASS INFRASTRUCTURE, SUCH AS ALL UPSTREAM DIVERSION STRUCTURES, CONNECTING STRUCTURES, OR PIPE CONDUITS CONNECTING TO COMPLETE THE STORMCEPTOR SYSTEM SHALL BE PROVIDED AND ADDRESSED SEPARATELY.
4. DRAWING FOR INFORMATION PURPOSES ONLY. REFER TO ENGINEER'S SITE/UTILITY PLAN FOR STRUCTURE ORIENTATION.
5. NO PRODUCT SUBSTITUTIONS SHALL BE ACCEPTED UNLESS SUBMITTED 10 DAYS PRIOR TO PROJECT BID DATE, OR AS DIRECTED BY THE ENGINEER OF RECORD.

INSTALLATION NOTES

A. ANY SUB-BASE, BACKFILL DEPTH, AND/OR ANTI-FLOTATION PROVISIONS ARE SITE-SPECIFIC DESIGN CONSIDERATIONS AND SHALL BE SPECIFIED BY ENGINEER OF RECORD.
B. CONTRACTOR TO PROVIDE EQUIPMENT WITH SUFFICIENT LIFTING AND REACH CAPACITY TO LIFT AND SET THE STRUCTURE (LIFTING CLUTCHES PROVIDED)
C. CONTRACTOR WILL INSTALL AND LEVEL THE STRUCTURE, SEALING THE JOINTS, LINE ENTRY AND EXIT POINTS (NON-SHRINK GROUT WITH APPROVED WATERSTOP OR FLEXIBLE BOOT)
D. CONTRACTOR TO TAKE APPROPRIATE MEASURES TO PROTECT THE DEVICE FROM CONSTRUCTION-RELATED EROSION RUNOFF.
E. DEVICE ACTIVATION, BY CONTRACTOR, SHALL OCCUR ONLY AFTER SITE HAS BEEN STABILIZED AND THE STORMCEPTOR UNIT IS CLEAN AND FREE OF DEBRIS.

STANDARD DETAIL
NOT FOR CONSTRUCTION

SITE SPECIFIC DATA REQUIREMENTS

STORMCEPTOR MODEL	EFO4				
STRUCTURE ID					*
HYDROCARBON STORAGE REQ'D (L)					*
WATER QUALITY FLOW RATE (L/s)					*
PEAK FLOW RATE (L/s)					*
RETURN PERIOD OF PEAK FLOW (yrs)					*
DRAINAGE AREA (HA)					*
DRAINAGE AREA IMPERVIOUSNESS (%)					*
PIPE DATA:	I.E.	MAT'L	DIA	SLOPE %	HGL
INLET #1	*	*	*	*	*
INLET #2	*	*	*	*	*
OUTLET	*	*	*	*	*

* PER ENGINEER OF RECORD

The design and information shown on this drawing is provided as a service to the project owner, engineer and contractor by Imbrium Systems ("Imbrium"). Neither this drawing, nor any part thereof, may be used, reproduced or modified in any manner without the prior written consent of Imbrium. Failure to comply is done at the user's own risk and Imbrium expressly disclaims any liability or responsibility for such use.

If discrepancies between the supplied information upon which the drawing is based and actual field conditions are encountered as site work progresses, these discrepancies must be reported to Imbrium immediately for re-evaluation of the design. Imbrium accepts no liability for designs based on missing, incomplete or inaccurate information supplied by others.

MARK	DATE	REVISION DESCRIPTION	BY
####	####	####	####
####	####	####	####
####	####	####	####
1	6/8/18	UPDATES	JSK
0	5/26/17	INITIAL RELEASE	JSK

Stormceptor® EF

SCALE = NTS

imbrium®

407 FAIRVIEW DRIVE, WHITBY, ON L1N 3A9
TF 800-565-4801 CA 416-960-9900 INTL +1-416-960-9900

DATE: 10/13/2017	
DESIGNED: JSK	DRAWN: JSK
CHECKED: BSF	APPROVED: SP
PROJECT No.: EFO4	SEQUENCE No.: *
SHEET: 1 OF 1	

STANDARD SPECIFICATION FOR "OIL GRIT SEPARATOR" (OGS) STORMWATER QUALITY TREAMENT DEVICE WITH THIRD-PARTY VERIFIED LIGHT LIQUID RE-ENTRAINMENT SIMULATION PERFORMANCE TESTING RESULTS

PART 1 – GENERAL

1.1 WORK INCLUDED

This section specifies requirements for selecting, sizing, designing, maintaining, and constructing an underground Oil Grit Separator (OGS) device for stormwater quality treatment, **specifically an OGS device that has been third-party tested for oil and fuel retention capability using a protocol for light liquid re-entrainment simulation testing, with testing results and a Statement of Verification in accordance with all the provisions of ISO 14034 Environmental Management – Environmental Technology Verification (ETV)**. Work includes supply and installation of concrete bases, precast sections, and the appropriate precast section with OGS internal components correctly installed within the system, watertight sealed to the precast concrete prior to arrival to the project site.

1.2 REFERENCE STANDARDS

1.2.1 For Canadian projects only, the following reference standards apply:

CAN/CSA-A257.4-14: Joints for Circular Concrete Sewer and Culvert Pipe, Manhole Sections, and Fittings Using Rubber Gaskets
CAN/CSA-A257.4-14: Precast Reinforced Circular Concrete Manhole Sections, Catch Basins, and Fittings
CAN/CSA-S6-00: Canadian Highway Bridge Design Code

1.2.2 For ALL projects, the following reference standards apply:

ASTM D-4097: Contact Molded Glass Fiber Reinforced Chemical Resistant Tanks
ASTM C 478: Specification for Precast Reinforced Concrete Manhole Sections
ASTM C 443: Specification for Joints for Concrete Pipe and Manholes, Using Rubber Gaskets
ASTM C 891: Standard Practice for Installation of Underground Precast Concrete Utility Structures
ASTM D2563: Standard Practice for Classification of Visual Defects in Reinforced Plastics

1.3 SHOP DRAWINGS

1.3.1 Shop drawings shall be submitted upon request with each order to the contractor then forwarded to the Engineer of Record for review and acceptance. Shop drawings shall detail the precast concrete components and OGS internal components prior to shipment, including the sequence for installation.

1.3.2 Unless directed otherwise by the Engineer of Record, OGS stormwater quality treatment product substitutions or alternatives submitted within ten days prior to project bid shall not be accepted. All alternatives or substitutions submitted shall be based on the exact same criteria detailed in Section 3, in entirety, subject to review and approval by the Engineer of Record. Any and all changes to project cost estimates, bonding amounts, plan check fees for revision of approved documents, or design impacts due to regulatory requirements as a result of a product substitution shall be coordinated by the Contractor with the Engineer of Record.

1.4 HANDLING AND STORAGE

Prevent damage to materials during storage and handling.

1.4.1 OGS internal components supplied by the Manufacturer for attachment to the precast concrete vessel shall be pre-fabricated, bolted to the precast and watertight sealed to the precast vessel surface prior to site delivery to ensure Manufacturer's internal assembly process and quality control processes are fully adhered to, and to prevent materials damage on site.

1.4.2 Follow all instructions including the sequence for installation in the shop drawings during installation.

PART 2 – PRODUCTS

2.1 GENERAL

2.1.1 The OGS vessel shall be cylindrical and constructed from precast concrete riser and slab components.

2.1.2 The precast concrete OGS internal components shall include a fiberglass insert bolted and watertight sealed inside the precast concrete vessel, prior to site delivery. Primary internal components that are to be anchored and watertight sealed to the precast concrete vessel shall be done so only by the Manufacturer prior to arrival at the job site to ensure product quality.

2.1.3 The OGS shall be allowed to be specified and have the ability to function as a 240-degree bend structure in the stormwater drainage system, or as a junction structure.

2.1.4 The OGS to be specified shall have the capability to accept influent flow from an inlet grate and an inlet pipe.

2.2 PRECAST CONCRETE SECTIONS

All precast concrete components shall be designed and manufactured to meet highway loading conditions per State/Provincial or local requirements.

2.3 GASKETS

Only profile neoprene or nitrile rubber gaskets that are oil resistant shall be accepted. For Canadian projects only, gaskets shall be in accordance to CSA A257.4-14. Mastic sealants, butyl tape/rope or Conseal CS-101 alone are not acceptable gasket materials.

2.4 JOINTS

The concrete joints shall be watertight and meet the design criteria according to ASTM C-990. For projects where joints require gaskets, the concrete joints shall be watertight and oil resistant and meet the design criteria according to ASTM C-443. Mastic sealants or butyl tape/rope alone are not an acceptable alternative.

2.5 FRAMES AND COVERS

Frames and covers shall be manufactured in accordance with State/Provincial or local requirements for inspection and maintenance access purposes. A minimum of one cover, at least 22-inch (560 mm) in diameter, shall be clearly embossed with the OGS manufacturer's product name to properly identify this asset's purpose is for stormwater quality treatment.

2.6 PRECAST CONCRETE

All precast concrete components shall conform to the appropriate CSA or ASTM specifications.

2.7 FIBERGLASS

The fiberglass portion of the OGS device shall be constructed in accordance with ASTM D2563, and in accordance with the PS15-69 manufacturing standard, and shall only be installed, bolted and watertight sealed to the precast concrete by the Manufacturer prior to arrival at the project site to ensure product quality.

2.8 OGS POLLUTANT STORAGE

The OGS device shall include a sump for sediment storage, and a fiberglass insert for the capture and storage of petroleum hydrocarbons and buoyant gross pollutants. The total sediment storage capacity shall be a minimum 40 ft^3 (1.1 m^3). The total petroleum hydrocarbon storage capacity shall be a minimum 50 gallons (189 liters). The access opening to the sump of the OGS device for periodic inspection and maintenance purposes shall be a minimum 16 inches (406 mm) in diameter.

2.9 LADDERS

Ladder rungs shall be provided upon request or to comply with State/Provincial or local requirements.

2.10 INSPECTION

All precast concrete sections shall be level and inspected to ensure dimensions, appearance, integrity of internal components, and quality of the product meets State/Provincial or local specifications and associated standards.

PART 3 – PERFORMANCE & DESIGN

3.1 GENERAL

The OGS stormwater quality treatment device shall be verified in accordance with ISO 14034:2016 Environmental management – Environmental technology verification (ETV). The OGS stormwater quality treatment device shall remove oil, sediment and gross pollutants from stormwater runoff during frequent wet weather events, and retain these pollutants during less frequent high flow wet weather events below the insert within the OGS for later removal during maintenance. The Manufacturer shall have at least ten (10) years of local experience, history and success in engineering design, manufacturing and production and supply of OGS stormwater quality treatment device systems, acceptable to the Engineer of Record.

3.2 HYDROLOGY AND RUNOFF VOLUME

The OGS device shall be engineered, designed and sized to treat a minimum of 90 percent of the average annual runoff volume, unless otherwise stated by the Engineer of Record, using historical rainfall data. Rainfall data sets should be comprised of a minimum 15-years of rainfall data or a longer continuous period if available for a given location, but in all cases a minimum 5-year period of rainfall data.

3.3 ANNUAL (TSS) SEDIMIMENT LOAD AND STORAGE CAPACITY

The OGS device shall be capable of removing and have sufficient storage capacity for the calculated annual total suspended solids (TSS) mass load and volume without scouring previously captured pollutants prior to maintenance being required. The annual (TSS) sediment load and volume transported from the drainage area should be calculated and compared to the OGS device's available storage capacity by the specifying Engineer to ensure adequate capacity between maintenance cycles. Sediment loadings shall be determined by land use and defined as a minimum of 450 kg (992 lb) of sediment (TSS) per impervious hectare of drainage area per year, or greater based on land use, as noted in Table 1 below.

Annual sediment volume calculations shall be performed using the projected average annual treated runoff volume, a typical sediment bulk density of 1602 kg/m^3 (100 lbs/ft^3) and an assumed Event Mean Concentration (EMC) of 125 mg/L TSS in the runoff, or as otherwise determined by the Engineer of Record.

Example calculation for a 1.3-hectares parking lot site:

- 1.28 meters of rainfall depth, per year
- 1.3 hectares of 100% impervious drainage area
- EMC of 125 mg/L TSS in runoff
- Treatment of 90% of the average annual runoff volume
- Target average annual TSS removal rate of 60% by OGS

Annual Runoff Volume:

- 1.28 m rain depth x 1.3 ha x 10,000 m^2/ha= 16,640 m^3 of runoff volume
- 16,640 m^3 x 1000 L/m^3 = 16,640,000 L of runoff volume
- 16,640,000 L x 0.90 = 14,976,000 L to be treated by OGS unit

Annual Sediment Mass and Sediment Volume Load Calculation:

- 14,976,000 L x 125 mg/L x kg/1,000,000 mg = 1,872 kg annual sediment mass
- 1,872 kg x m^3/1602 kg = 1.17 m^3 annual sediment volume
- 1.17 m^3 x 60% TSS removal rate by OGS = 0.70 m^3 minimum expected annual storage requirement in OGS

As a guideline, the U.S. EPA has determined typical annual sediment loads per drainage area for various sites by land use (see Table 1). Certain States, Provinces and local jurisdictions have also established such guidelines.

Table 1 – Annual Mass Sediment Loading by Land Use

	Commercial	Parking Lot	Residential			Highways	Industrial	Shopping Center
			High	Med.	Low			
(lbs/acre/yr)	1,000	400	420	250	10	880	500	440
(kg/hectare/yr)	1,124	450	472	281	11	989	562	494

Source: U.S. EPA Stormwater Best Management Practice Design Guide Volume 1, Appendix D, Table D-1, Burton and Pitt 2002

3.4 SIZING METHODOLOGY

The OGS device shall be engineered, designed and sized to provide stormwater quality treatment based on treating a minimum of 90 percent of the average annual runoff volume and a minimum removal of an annual average 60% of the sediment (TSS) load based on the Particle Size Distribution (PSD) specified in Table 2, Section 3.5, and based on third-party performance testing conducted in accordance with the Canadian Environmental Technology Verification (ETV) Program's **Procedure for Laboratory Testing of Oil-Grit Separators**. Sizing of the OGS shall be determined by use of a minimum ten (10) years of local historical rainfall data provided by Environment Canada. Sizing shall also be determined by use of the sediment removal performance data derived from the ISO 14034 ETV third-party verified laboratory testing data from testing conducted in accordance with the Canadian ETV protocol *Procedure for Laboratory Testing of Oil-Grit Separators*, as follows:

3.4.1 Sediment removal efficiency for a given surface loading rate and its associated flow rate shall be based on sediment removal efficiency demonstrated at the seven (7) tested surface loading rates specified in the protocol, ranging 40 L/min/m^2 to 1400 L/min/m^2, and as stated in the ISO 14034 ETV Verification Statement for the OGS device.

3.4.2 Sediment removal efficiency for surface loading rates between 40 L/min/m^2 and 1400 L/min/m^2 shall be based on linear interpolation of data between consecutive tested surface loading rates.

3.4.3 Sediment removal efficiency for surface loading rates less than the lowest tested surface loading rate of 40 L/min/m^2 shall be assumed to be identical to the sediment removal efficiency at 40 L/min/m^2. No extrapolation shall be allowed that results in a sediment removal efficiency that is greater than that demonstrated at 40 L/min/m^2.

3.4.4 Sediment removal efficiency for surface loading rates greater than the highest tested surface loading rate of 1400 L/min/m^2 shall assume zero sediment removal for the portion of flow that exceeds 1400 L/min/m^2, and shall be calculated using a simple proportioning formula, with 1400 L/min/m^2 in the numerator and the higher surface loading rate in the denominator, and multiplying the resulting fraction times the sediment removal efficiency at 1400 L/min/m^2.

The OGS device shall also have sufficient annual sediment storage capacity as specified and calculated in Section 3.3.

3.4.5 The Peclet Number is not an approved method or model for calculating TSS removal, sizing, or scaling OGS devices.

3.4.6 If an alternate OGS device is proposed, supporting documentation shall be submitted that demonstrates:

- Canadian ETV or ISO 14034 ETV Verification Statement which verifies third-party performance testing conducted in accordance with the **Procedure for Laboratory Testing of Oil-Grit Separators,** including the Light Liquid Re-entrainment Simulation Testing.
- Equal or better sediment (TSS) removal of the PSD specified in Table 2 at equivalent surface loading rates, as compared to the OGS device specified herein.
- Equal or better Light Liquid Re-entrainment Simulation Test results (using low-density polyethylene beads as a surrogate for light liquids such as oil and fuel) at equivalent surface loading rates, as compared to the OGS device specified herein. However, an alternative OGS device shall not be allowed as a substitute if the Light Liquid Re-entrainment Simulation Test was performed with screening components within the OGS device that are effective at retaining the low-density polyethylene beads, but would not be expected to retain light liquids such as oil and fuel.
- Equal or greater sediment storage capacity, as compared to the OGS device specified herein.
- Supporting documentation shall be signed and sealed by a local registered Professional Engineer. All costs associated with preparing and certifying this documentation shall be born solely by the Contractor.

3.5 PARTICLE SIZE DISTRIBUTION (PSD) FOR SIZING

The OGS device shall be sized to achieve the Engineer-specified average annual percent sediment (TSS) removal based solely on the test sediment used in the Canadian ETV Program's **Procedure for Laboratory Testing of Oil-Grit Separators.** This test sediment is comprised of inorganic ground silica with a specific gravity of 2.65, uniformly mixed, and containing a broad range of particle sizes as specified in Table 2. No alternative PSDs or deviations from Table 2 shall be accepted.

Table 2
Canadian ETV Program Procedure for Laboratory Testing of Oil-Grit Separators
Particle Size Distribution (PSD) of Test Sediment

Particle Diameter (Microns)	% by Mass of All Particles	Specific Gravity
1000	5%	2.65
500	5%	2.65
250	15%	2.65
150	15%	2.65
100	10%	2.65
75	5%	2.65
50	10%	2.65
20	15%	2.65
8	10%	2.65
5	5%	2.65
2	5%	2.65

3.6 CANADIAN ETV or ISO 14034 ETV VERIFICATION OF SCOUR TESTING

The OGS device shall have Canadian ETV or ISO 14034 ETV Verification of completed third-party scour testing conducted and have in accordance with the Canadian ETV Program's **Procedure for Laboratory Testing of Oil-Grit Separators**. This scour testing is conducted with the device pre-loaded with test sediment comprised of the particle size distribution (PSD) illustrated in Table 2.

3.6.1 To be acceptable for on-line installation, the OGS device must demonstrate an average scour test effluent concentration less than 10 mg/L at each surface loading rate tested, up to and including 2600 L/min/m^2.

Data generated from laboratory scour testing performed with an OGS device pre-loaded with a coarser PSD than in Table 2 (i.e. the coarser PSD has no particles in the 1-micron to 50-micron size range, or the D_{50} of the test sediment exceeds 75 microns) shall not be acceptable for the determination of the device's suitability for on-line installation.

3.7 DESIGN ACCOUNTING FOR BYPASS

3.7.1 The OGS device shall be specified to achieve the TSS removal performance and water quality objectives without washout of previously captured pollutants. The OGS device shall also have sufficient hydraulic conveyance capacity to convey the peak storm event, in accordance with hydraulic conditions per the Engineer of Record. To ensure this is achieved, there are two design options with associated requirements:

3.7.1.1 The OGS device shall be placed **off-line** with an upstream diversion structure (typically in an upstream manhole) that only allows the water quality volume to be diverted to the OGS device, and excessive flows diverted downstream around the OGS device to prevent high flow washout of pollutants previously captured. This design typically incorporates a triangular layout including an upstream bypass manhole with an appropriately engineered weir wall, the OGS device, and a downstream junction manhole, which is connected to both the OGS device and bypass structure. In this case with an external bypass required, the OGS device manufacturer must provide calculations and designs for all structures, piping and any other required material applicable to the proper functioning of the system, stamped by a Professional Engineer.

3.7.1.2 Alternatively, OGS devices in compliance with Section 3.6 shall be acceptable for an **on-line** design configuration, thereby eliminating the requirement for an upstream bypass manhole and downstream junction manhole.

3.7.2 The OGS device shall also have sufficient hydraulic conveyance capacity to convey the peak storm event, in accordance with hydraulic conditions per the Engineer of Record. If an alternate OGS device is proposed, supporting documentation shall be submitted that demonstrates equal or better hydraulic conveyance capacity as compared to the OGS device specified herein. This documentation shall be signed and sealed by a local registered Professional Engineer. All costs associated with preparing and certifying this documentation shall be born solely by the Contractor.

3.8 LIGHT LIQUID RE-ENTRAINMENT SIMULATION TESTING

The OGS device shall have Canadian ETV or ISO 14034 ETV Verification of completed third-party Light Liquid Re-entrainment Simulation Testing in accordance with the Canadian ETV Program's **Procedure for Laboratory Testing of Oil-Grit Separators**, with results reported within the Canadian ETV or ISO 14034 ETV verification. This re-entrainment testing is conducted with the device pre-loaded with low density polyethylene (LDPE) plastic beads as a surrogate for light liquids such as oil and fuel. Testing is conducted on the same OGS unit tested for sediment removal to assess whether light liquids captured after a spill are effectively retained at high flow rates.

3.8.1 For an OGS device to be an acceptable stormwater treatment device on a site where vehicular traffic occurs and the potential for an oil or fuel spill exists, the OGS device must have reported verified performance results of greater than 99% cumulative retention of LDPE plastic beads for the five specified surface loading rates (ranging 200 L/min/m^2 to 2600 L/min/m^2) in accordance with the Light Liquid Re-entrainment Simulation Testing within the Canadian ETV Program's **Procedure for Laboratory Testing of Oil-Grit Separators**. However, an OGS device shall not be allowed if the Light Liquid Re-entrainment Simulation Testing was performed with screening components within the OGS device that are effective at retaining the LDPE plastic beads, but would not be expected to retain light liquids such as oil and fuel.

3.9 PETROLEUM HYDROCARBONS AND FLOATABLES STORAGE CAPACITY

Petroleum hydrocarbons and floatables storage capacity in the OGS device shall be a minimum 50 gallons (189 Liters), or more as specified.

3.9.1 The OGS device shall have gasketed precast concrete joints that are watertight, and oil resistant and meet the design criteria according to ASTM C-443 to provide safe oil and other hydrocarbon materials storage and ground water protection. Mastic sealants or butyl tape/rope alone are not an acceptable alternative.

3.10 SURFACE LOADING RATE SCALING OF DIFFERENT MODEL SIZES

The reference device for scaling shall be an OGS device that has been third-party tested in accordance with the Canadian ETV Program's **Procedure for Laboratory Testing of Oil-Grit Separators**. Other model sizes of the tested device shall only be scaled such that the claimed TSS removal efficiency of the scaled device shall be no greater than the TSS removal efficiency of the tested device at identical **surface loading rates** (flow rate divided by settling surface area). The depth of other model sizes of the tested device shall be scaled in accordance with the depth scaling provisions within Section 6.0 of the Canadian ETV Program's **Procedure for Laboratory Testing of Oil-Grit Separators**.

3.10.1 The Peclet Number and volumetric scaling are not approved methods for scaling OGS devices.

PART 4 – INSPECTION & MAINTENANCE

The OGS manufacturer shall provide an Owner's Manual upon request.
Maintenance shall be performed by a professional service provider who has experience in cleaning OGS devices and has been trained and certified in applicable health and safety practices, including confined space entry procedures.

4.1 A Quality Assurance Plan that provides inspection for a minimum of 5 years shall be included with the OGS stormwater quality device, and written into the Environmental Compliance Approval (ECA) or the appropriate State/Provincial or local approval document.

4.2 OGS device inspection shall include determination of sediment depth and presence of petroleum hydrocarbons below the insert. Inspection shall be easily conducted from finished grade through a frame and cover of at least 22 inch (560 mm) in diameter.

4.3 Inspection and pollutant removal shall be conducted periodically. For routine maintenance cleaning activities, pollutant removal shall typically utilize a truck equipped with vacuum apparatus, and shall be easily conducted from finished grade through a frame and cover of at least 22-inches (560 mm) in diameter.

4.4 Diameter of the maintenance access opening to the lower chamber and sump shall be scaled consistently across all model sizes, and shall be 1/3 the inside diameter of the OGS structure, or larger.

4.5 No confined space entry shall be required for routine inspection and maintenance cleaning activities.

4.6 For OGS model sizes of diameter 72 inches (1828 mm) and greater, the access opening to the OGS device's lower chamber and sump shall be large enough to allow a maintenance worker to enter the lower chamber to facilitate non-routine maintenance cleaning activities and repairs, as needed.

4.7 The orifice-containing component (i.e. drop pipe, duct, chute, etc.) of the OGS device used to control flow rate into the lower chamber shall be removable from the insert to facilitate cleaning, repair, or replacement of the orifice-containing component, as needed.

PART 5 – EXECUTION

5.1 PRECAST CONCRETE INSTALLATION

The installation of the precast concrete OGS stormwater quality treatment device shall conform to ASTM C 891, ASTM C 478, ASTM C 443, CAN/CSA-A257.4-14, CAN/CSA-A257.4-14, CAN/CSA-S6-00 and all highway, State/Provincial, or local specifications for the construction of manholes. Selected sections of a general specification that are applicable are summarized below. The Contractor shall furnish all labor, equipment and materials necessary to offload, assemble as needed the OGS internal components as specified in the Shop Drawings.

5.2 EXCAVATION

5.2.1 Excavation for the installation of the OGS stormwater quality treatment device shall conform to highway, State/Provincial or local specifications. Topsoil that is removed during the excavation for the OGS stormwater quality treatment device shall be stockpiled in designated areas and not be mixed with subsoil or other materials. Topsoil stockpiles and the general site preparation for the installation of the OGS stormwater quality device shall conform to highway, State/Provincial or local specifications.

5.2.2 The OGS device shall not be installed on frozen ground. Excavation shall extend a minimum of 12 inch (300 mm) from the precast concrete surfaces plus an allowance for shoring and bracing where required. If the bottom of the excavation provides an unsuitable foundation additional excavation may be required.

5.2.3 In areas with a high water table, continuous dewatering shall be provided to ensure that the excavation is stable and free of water.

5.3 BACKFILLING

Backfill material shall conform to highway, State/Provincial or local specifications. Backfill material shall be placed in uniform layers not exceeding 12 inches (300 mm) in depth and compacted to highway, State/Provincial or local specifications.

5.4 OGS WATER QUALITY DEVICE CONSTRUCTION SEQUENCE

5.4.1 The precast concrete OGS stormwater quality treatment device is installed and leveled in sections in the following sequence:

- aggregate base
- base slab, or base
- riser section(s) (if required)
- riser section w/ pre-installed fiberglass insert
- upper riser section(s)
- internal OGS device components
- connect inlet and outlet pipes
- riser section, top slab and/or transition (if required)
- frame and access cover

5.4.2 The precast concrete base shall be placed level at the specified grade. The entire base shall be in contact with the underlying compacted granular material. Subsequent sections, complete with oil resistant, watertight joint seals, shall be installed in accordance with the precast concrete manufacturer's recommendations.

5.4.3 Adjustment of the OGS stormwater quality treatment device can be performed by lifting the upper sections free of the excavated area, re-leveling the base, and re-installing the sections. Damaged sections and gaskets shall be repaired or replaced as necessary. Once the OGS stormwater quality treatment device has been constructed, any lift holes must be plugged with mortar.

5.5 DROP PIPE AND OIL INSPECTION PIPE

Once the upper precast concrete riser has been attached to the lower precast concrete riser section, the OGS device Drop Pipe and Oil Inspection Pipe must be attached, and watertight sealed to the fiberglass insert using Sikaflex 1a. Installation instructions and required materials shall be provided by the OGS manufacturer.

5.6 INLET AND OUTLET PIPES

Inlet and outlet pipes shall be securely set using grout or approved pipe seals (flexible boot connections, where applicable) so that the structure is watertight. Non-secure inlets and outlets will result in improper performance.

5.7 FRAME AND COVER OR FRAME AND GRATE INSTALLATION

Precast concrete adjustment units shall be installed to set the frame and cover/grate at the required elevation. The adjustment units shall be laid in a full bed of mortar with successive units being joined using sealant recommended by the manufacturer. Frames for the cover/grate should be set in a full bed of mortar at the elevation specified.

5.7.1 A minimum of one cover, at least 22-inch (560 mm) in diameter, shall be clearly embossed with the OGS device brand or product name to properly identify this asset's purpose is for stormwater quality treatment.