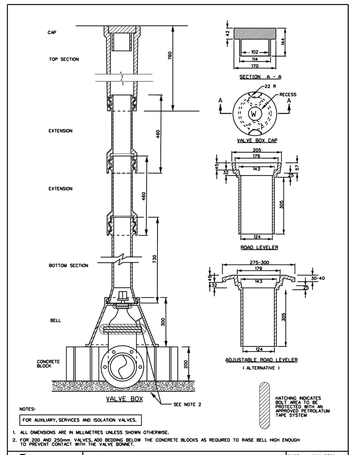

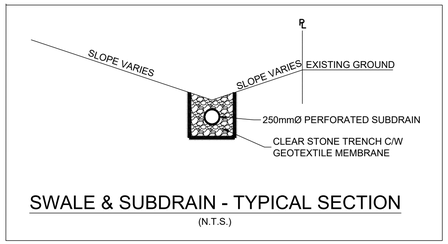

SWALE & SUBDRAIN - TYPICAL SECTION

(N.T.S.)

Service Lat. INV. @ BLDG	
Sump Pump	78.42
Sanitary	78.02
Water	76.40 (TWM)

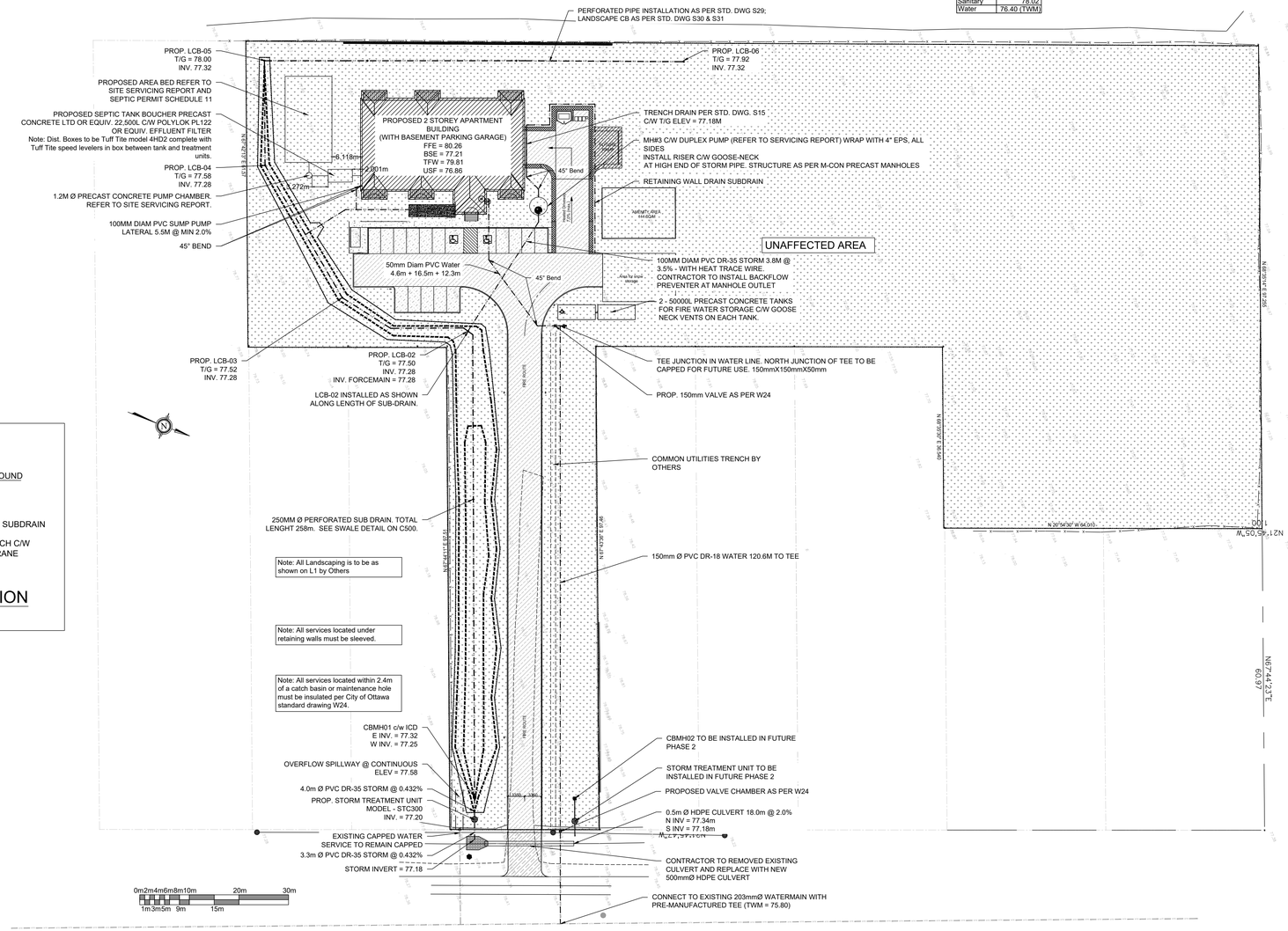

1. Elevations shown on plans are geodetic in meters and taken from topographical survey drawing by Arpentage Dutrisac Surveying Inc. July 2013.

2. Project T.B.M. (Temporary Benchmark). Nail in Utility Pole on East side of Rockdale Road Elev. = 78.39.

3. All water works to respect requirements of the City of Ottawa and to conform to the latest revision of Standard Tendering Documents as prepared by city.

4. All catch basin manholes and sewers work to be constructed as per the requirements of the City of Ottawa.

5. Pipes sizes shall be as shown on drawing.

6. Pipes material to be as follows:
- storm sewer - PVC SDR28
- watermain - PVC DR18
- sanitary sewer - SDR 35
- sub-drain - flexible perforated heavy duty polyethylene pipe c/w polyester sock filter by BIG'O' or equivalent.

7. All water services shall have 2.4 m frost cover minimum.

8. Existing services and utilities shown on this drawing are taken from best available records but are not complete. Contractor is required to check in field for location and all elevation of pipes and check with utility companies before digging or ordering any material. Advise engineer of any discrepancies for recommendations and directions, prior to ordering any materials or starting any work.

9. Geotechnical Report, perform by Morey Associates Ltd. (report# 013300, written September 2013), forms part of our specifications and requirements. Contractor must be fully cognizant of its content and respect its recommendations.

10. Stormwater Management Report by Blanchard Letendre Engineering Ltd., forms part of our specifications and requirements. The contractor must be fully cognizant of its content and respect its recommendations.

11. All plumbing and electrical work to be coordinated with civil engineering.

12. Notify engineer for inspection prior to backfilling or covering any pipes or appurtenances.

13. Contractor to respect grading around building to be 0.15m minimum below top of foundation or any siding or finish wall material.

14. All works for private approach including any temporary construction access to the site lane shall be constructed in accordance with requirements of the City of Ottawa standards.

15. Contractor to prevent erosion and sedimentation damages by installing geosocks under cover of existing down stream catch basins and also take necessary measures to prevent erosion and sediment deposit on adjacent property. Provide also straw wall with pickets & geotextile at perimeter of property.

16. All pipe bedding to be as per the City of Ottawa requirements and as specified in geotechnical report.

17. Contractor to obtain clearance certificate from all agencies, authorities and utility company prior to making any excavation. Provide copy of clearance certificate to engineer prior to start of construction.

18. MH#1 & MH#2 are to be as per OPSD 705.010. MH#3 is to be as per OPSD 701.015 complete with transition slab, 1200mm diameter riser and 1200mm diameter precast flat cap.

19. All catch basin manholes shall be cleaned and empty annually for the purpose of capturing sediment.

20. Refer to site plan by Blanchard Letendre Engineering Ltd. for details of curb radius, dimensions of lanes, parking stalls, set back requirements and site data.

21. Location of street water is approximate and contractor to verify the exact distance and elevation.

22. Contractor to perform all testing verification, cleaning and preparation as per the requirements of the City of Ottawa before final approval.

23. Major overland flow is @ an elevation of 77.65 m.

24. Proposed grade elevations to match existing elevations at property line or as per plan.

25. All proposed grades greater than 7% are proposed average grades. Contractor to use construct slope using terracing.

26. Floor drains are to be drained into an oil grit interceptor prior to discharged a septic system

COPYRIGHT RESERVED
THE CONTRACTOR SHALL VERIFY AND BE RESPONSIBLE OF ALL DIMENSIONS. DO NOT SCALE THE DRAWING - ANY ERRORS OR OMISSIONS SHALL BE REPORTED TO BLANCHARD LETENDRE ENGINEERING LTD. WITHOUT DELAY. THE COPYRIGHTS TO ALL DESIGNS AND DRAWINGS ARE THE PROPERTY OF BLANCHARD LETENDRE ENGINEERING LTD. REPRODUCTION OR USE FOR ANY PURPOSE OTHER THAN THAT AUTHORIZED BY BLANCHARD LETENDRE ENGINEERING LTD. IS STRICTLY PROHIBITED.

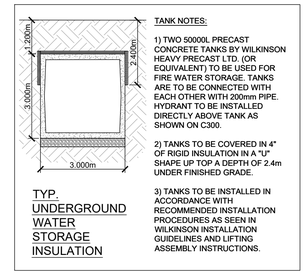

TANK NOTES:

1) TWO 50000L PRECAST CONCRETE TANKS BY WILKINSON HEAVY PRECAST LTD. (OR EQUIVALENT) TO BE USED FOR FIRE WATER STORAGE. TANKS ARE TO BE CONNECTED WITH EACH OTHER WITH 200mm PIPE. HYDRANT TO BE INSTALLED DIRECTLY ABOVE TANK AS SHOWN ON C300.

2) TANKS TO BE COVERED IN 4" OF RIGID INSULATION IN A "U" SHAPE UP TOP A DEPTH OF 2.4m UNDER FINISHED GRADE.

3) TANKS TO BE INSTALLED IN ACCORDANCE WITH RECOMMENDED INSTALLATION PROCEDURES AS SEEN IN WILKINSON INSTALLATION GUIDELINES AND LIFTING ASSEMBLY INSTRUCTIONS.

WATER SERVICE PROFILE FOR 5574 ROCKDALE ROAD					
CHAINAGE(m)	LOCATION	FIN. GRADE	TOP OF PIPE	INVERT ELEV.(m)	COMMENTS
0.000	CITY SERVICES	78.20	75.80	2.40	150MM DIA. PRIVATE MAIN
9.712	EDGE OF ASPHALT	78.39	75.20	3.19	
10.000	0+10	78.38	75.19	3.19	
16.134	CL OF DITCH	77.35	74.95	2.40	
19.171	CURB STOP	77.88	74.86	3.02	
20.000	0+20	77.98	75.01	2.97	
24.936	TRW @ HEADWALL	77.98	75.28	2.70	
25.236	SWALE @ HEADWALL	77.71	75.30	2.41	
30.000	0+30	77.72	75.30	2.42	
40.000	0+40	77.74	75.30	2.44	
50.000	0+50	77.76	75.30	2.46	
60.000	0+60	77.78	75.30	2.48	
70.000	0+70	77.80	75.30	2.50	
80.000	0+80	77.82	75.30	2.52	
90.000	0+90	77.84	75.30	2.54	
100.000	1+00	77.86	75.30	2.56	
110.000	1+10	77.89	75.30	2.59	
118.210	C/L SWALE	77.66	75.25	2.41	
120.000	1+20	78.48	75.23	3.25	
120.618	MAIN TEE	78.35	75.94	2.41	150X150X150 TEE
123.393	150D TO 50 REDUCER	78.70	76.00	2.70	& 50MM SHUT OFF VALVE
124.143	EDGE OF ASPHALT	78.63	76.00	2.63	
125.244	BEND	78.55	76.00	2.55	
130.000	1+30	78.75	76.00	2.75	
140.000	1+40	78.57	76.00	2.57	
141.738	BEND	78.57	76.00	2.57	
148.148	EDGE OF SIDEWALK	78.93	76.00	2.93	
149.489	START OF GRASS	79.10	76.00	3.10	
150.000	1+50	79.10	76.00	3.10	
154.836	AT BUILDING	79.22	76.00	3.22	

LEGEND:

- EXISTING PROPERTY LINE TO REMAIN
- PROPOSED EASEMENT
- PROPOSED TERRACING (3:1 MIN.)
- PROPOSED DOOR ENTRANCE/EXIT
- ×50.00 PROPOSED ELEVATION
- ×50.00HP PROPOSED HIGH POINT ELEVATION
- ×50.00SW PROPOSED SWALE ELEVATION
- ×50.00EX MATCH INTO EXISTING ELEVATION
- 78.19 EXISTING ELEVATION
- PROPOSED OVERLAND MAJOR FLOW ROUTE
- PROPOSED SILT FENCE AS PER OPSD 219.110
- PROPOSED 100mmØ PERFORATED SUBDRAIN
- PROPOSED STORM SEWER
- PROPOSED SANITARY SEWER
- PROPOSED WATERMAIN
- EXISTING SANITARY SEWER
- EXISTING WATERMAIN
- PROPOSED CATCHBASIN-MANHOLE/CATCHBASIN
- PROPOSED CURB STOP
- PROPOSED PIPE INSULATION
- PROPOSED 100 YEAR HIGH WATER LEVEL
- STORM WATERSHED EXTENT
- WS-XX CONTROLLED — WATERSHED NAME
- RUNOFF COEFFICIENT
- AREA IN HECTARES
- PROPOSSED GRASS AREA
- PROPOSED CONCRETE FEATURES/SLAB
- PROPOSED HEAVY DUTY ASPHALT
- PROPOSED LIGHT DUTY ASPHALT
- PROPOSED GRAVEL AREA
- PROPOSED RIP RAP AS PER OPSD 810.010
- PROPOSED WATER METER
- PROPOSED ACCESS GATE
- PROPOSED GROWING FIELD

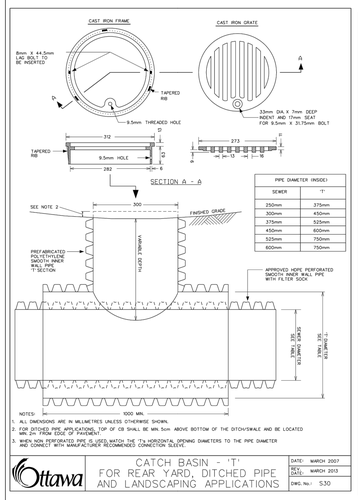

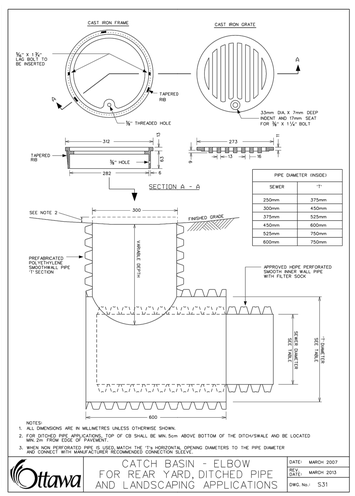

ENGINEERING STAMP

NO.	REVISION	DATE (DD/MM/YYYY)
#8		
#7		
#6		
#5		
#4		
#3		
#2	ISSUED FOR CITY COMMENTS 7	24 / 08 / 2020
#1	ISSUED FOR CITY COMMENTS 6	26 / 03 / 2020

BLANCHARD LETENDRE ENGINEERING
767, Notre Dame, Local 42, Embrun, Ontario, K0A 1W1
(613) 693-0700
blengineering.ca

CLIENT:

BERGERON CONSTRUCTION
172 ST.-THOMAS ROAD
VARS, ON, K0A 3H0

PROJECT:

12 UNIT APARTMENT BUILDING
5574 ROCKDALE ROAD
VARS, ON

DRAWING:

SITE SERVICING PLAN

PAPER FORMAT:	24x36
DRAWN BY:	BF + GB
CHECKED BY:	GB
DATE:	03-2020
SCALE:	1:500
PROJECT NUMBER:	19-276

PAGE: C300