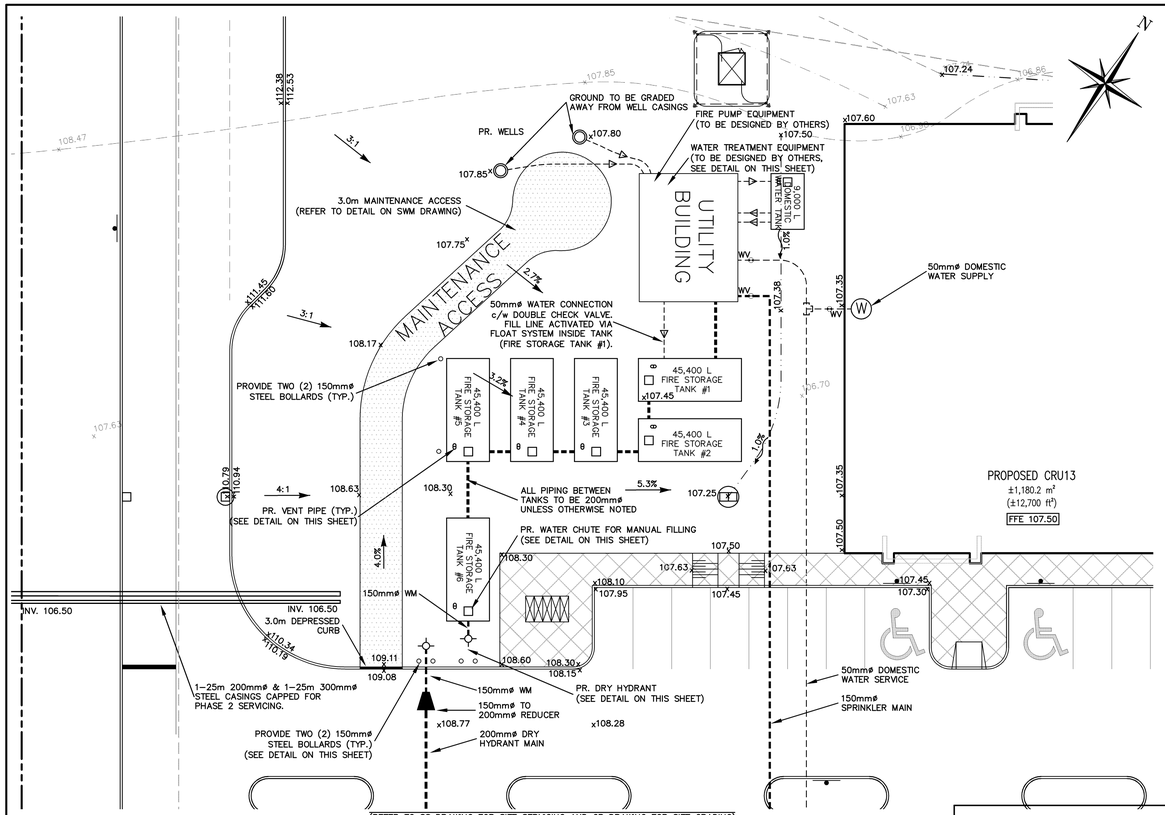

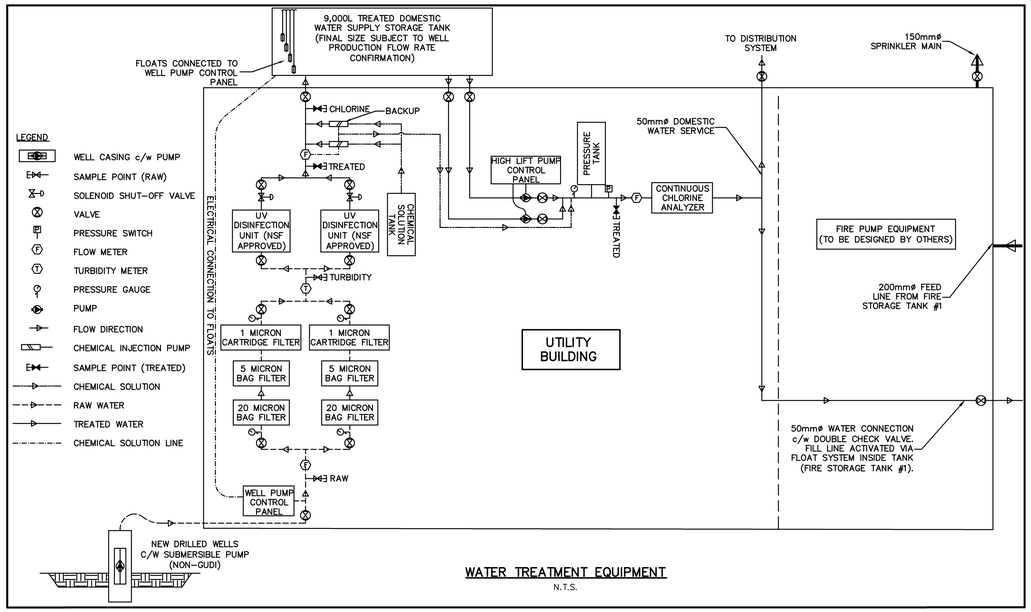

WATER TREATMENT EQUIPMENT
N.T.S.

Key Plan:

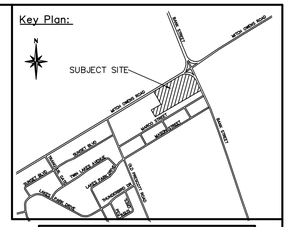

CAUTION
CONTRACTOR TO DETERMINE LOCATION OF EXISTING UTILITIES PRIOR TO CONSTRUCTION.

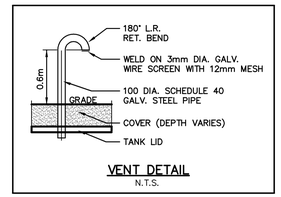

VENT DETAIL
N.T.S.

NOTES:

1. TANK ACCESS MUST BE PROVIDED VIA LOCKED WATER CHUTE ACCESS HATCH COMPLETE WITH LADDER RUNGS AND CONCRETE RISERS PER APPLICABLE OPSD REQUIREMENTS.
2. ALL CONNECTIONS TO THE STORAGE TANKS ARE TO BE WATER TIGHT (REFER TO TYPICAL WATER STORAGE TANK WALL PENETRATION WITH LINK-SEAL DETAIL ON THIS SHEET).
3. TANK IS TO BE BEDDED AS PER GEOTECHNICAL RECOMMENDATIONS.
4. REFER TO BIO 2 DRAWING FOR 45,400L TANK CROSS SECTION DETAILS. FOR 9,000L TANK CROSS SECTION SEE DETAIL ON THIS SHEET.
5. ALL CONCRETE TANKS ARE TO BE INSULATED (REFER TO DETAIL ON BIO 2 DRAWING)
6. ALL STRUCTURES (TANKS) TO BE NEWMARKET PRE-CAST CONCRETE PRODUCTS OR APPROVED EQUIVALENT. REFER TO BIO 2 DRAWING FOR TANK DETAILS.

WATER TANK	GROUND ELEV.	TOP OF STRUCTURE ELEV.	INLET ELEV.	OUTLET ELEV.
DOMESTIC WATER TANK	107.45	106.45	106.18	104.88
FIRE STORAGE TANK #1	107.46	106.54	103.73	103.73
FIRE STORAGE TANK #2	107.35	106.54	103.73	103.73
FIRE STORAGE TANK #3	107.58	106.54	103.73	103.73
FIRE STORAGE TANK #4	107.75	106.54	103.73	103.73
FIRE STORAGE TANK #5	107.89	106.54	103.73	103.73
FIRE STORAGE TANK #6	108.54	106.54	103.73	103.73

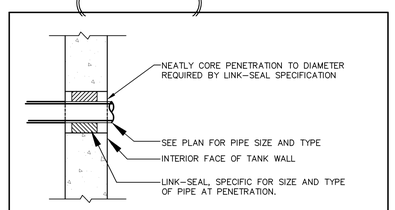

TYPICAL WATER STORAGE TANK WALL PENETRATION WITH LINK-SEAL
N.T.S.

NEWMARKET PRE-CAST CONCRETE PRODUCTS
Telephone: 905-852-6111 ; Toll Free 1-800-263-1297

Model 9000 (2000) Holding Tank – 1 Piece Unit
Balancing Capacity ..... 9646 Litres (2121 gal)

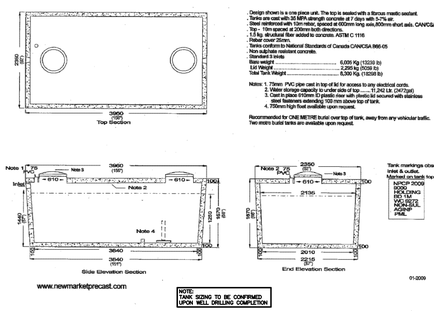

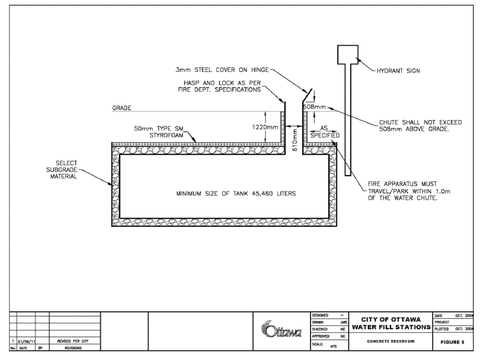

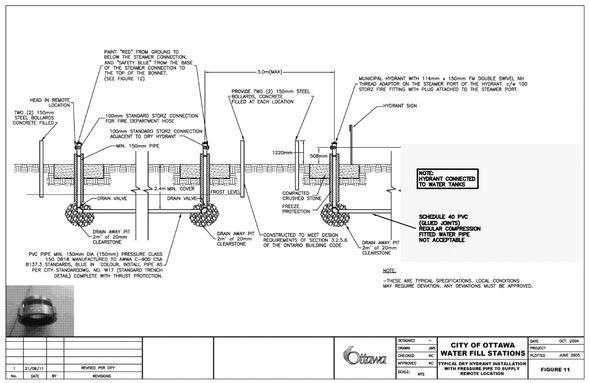

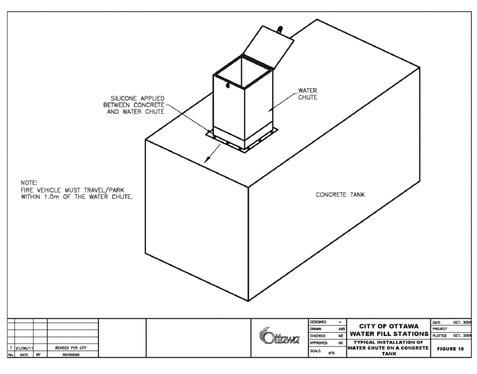

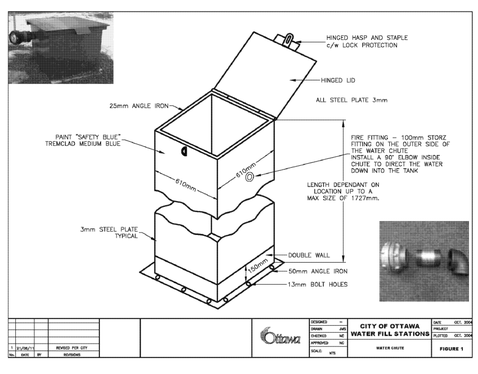

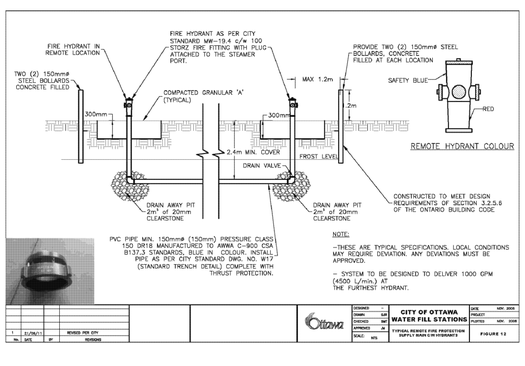

Notes:

1. Unless noted otherwise, the measurements and distances shown on this drawing are shown in meters.
2. Do not scale drawings.
3. It is the contractor's responsibility to verify all dimensions, levels and datums on site and report any discrepancies or omissions to WMI & Associates Ltd. prior to construction.
4. This drawing is to be read and understood in conjunction with all other relevant documents applicable to this project.
5. This drawing is the exclusive property of WMI & Associates Ltd. and the reproduction of any part of this document without prior written consent is strictly prohibited.

Benchmark: 113.99

#3 CONCRETE MONUMENT (001196530377). NORTH SIDE OF MITCH OWENS ROAD APPROXIMATELY 250m WEST OF THE INTERSECTION OF MITCH OWENS ROAD AND BANK STREET.

REGISTERED PROFESSIONAL ENGINEER
J.W.LIGHTHEART
100140403
May 22, 2015
PROVINCE OF ONTARIO

No.	Issue / Revision	Date
1	1st Submisson	Feb. 4, 2014
2	2nd Submisson	May 22, 2015

Greely Commercial Center

WATER FACILITY & FIRE STORAGE PLAN

Client:
Alium Investments Ltd.
3338 Dufferin Street
Toronto, Ontario
M6A 3A4

WMI & Associates Limited
119 Collier Street
Barrie, Ontario
L4M 1H5
Ph 705-797-2027
www.wmiengineering.ca

Drawn By	Checked By	Drawing No.
TG	JWL	WF
Scale 1:200	Project No. 11-183	