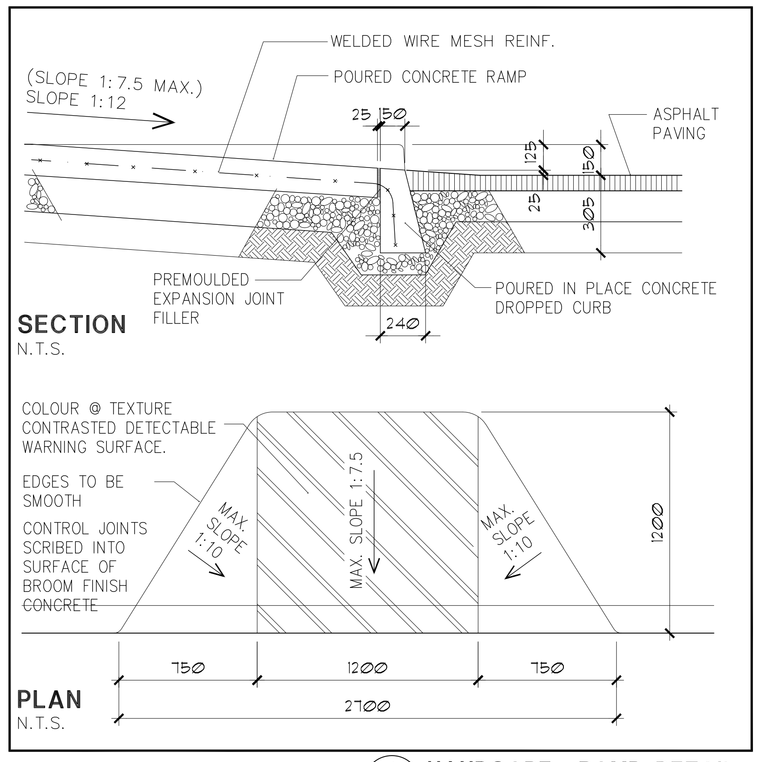

1 HANDCAPE RAMP DETAIL
SCALE: N.T.S.

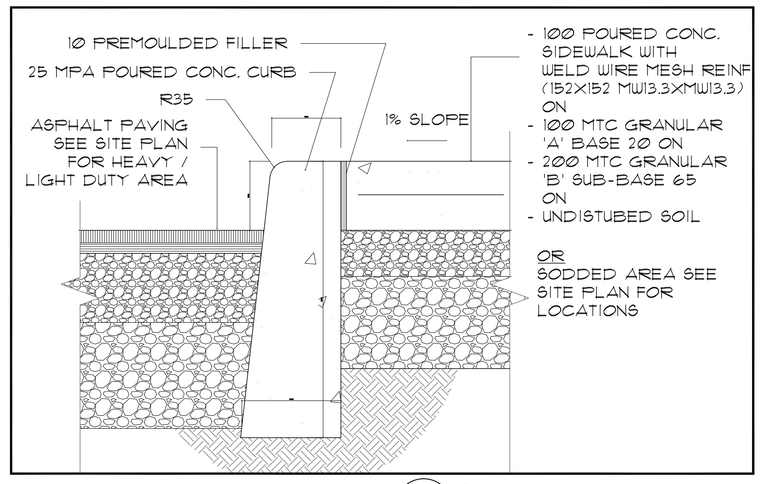

4 SIDEWALK DETAIL
SCALE: NTS

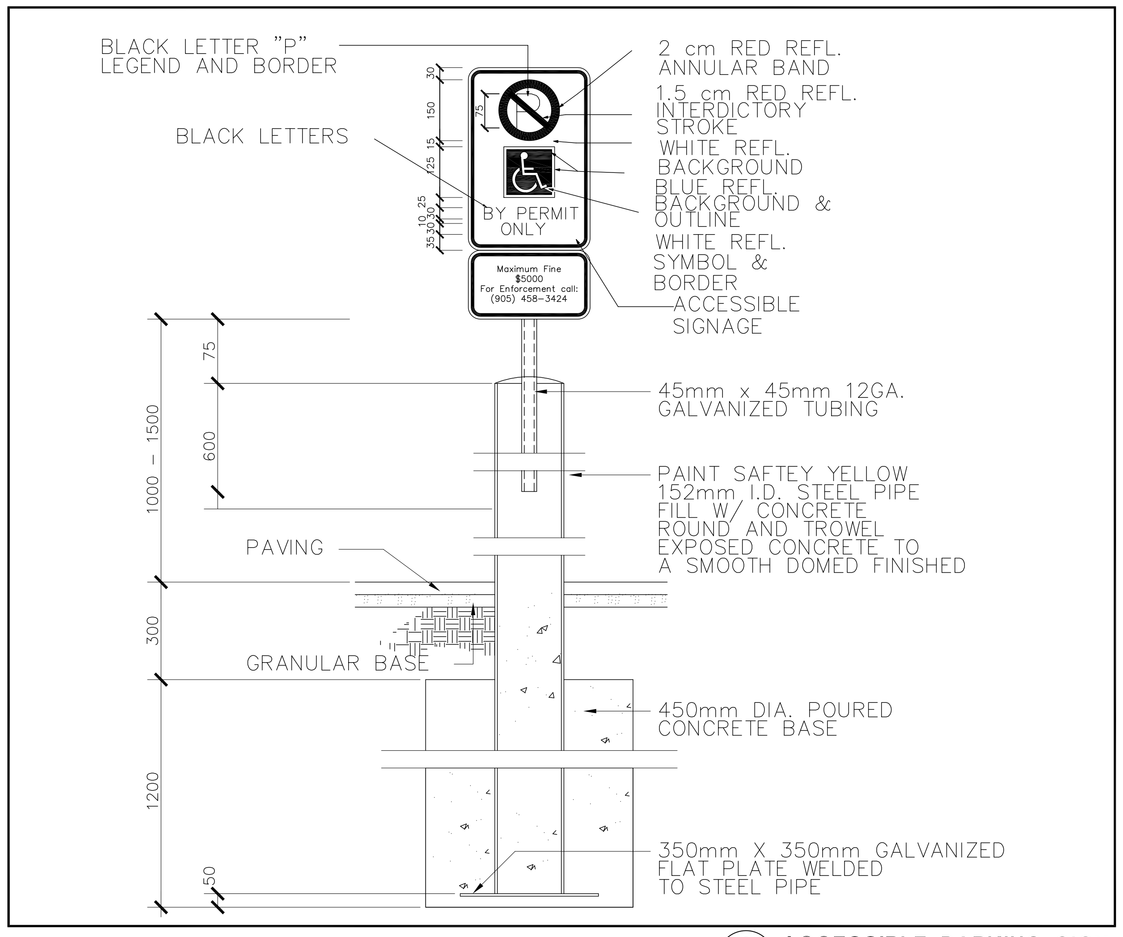

6 ACCESSIBLE PARKING SIGN
SCALE: NTS

FOR LIGHT DUTY ASPHALT

50 - 1 LAYER EB105 ASPHALTIC CONCRETE.

FOR HEAVY DUTY ASPHALT

SURFACE COURSE 40 HL3
BINDER COURSE 50 HL8

150 MTC GRANULAR 'A' BASE 20

230 - 300 MTC GRANULAR 'B' SUB-BASE 65

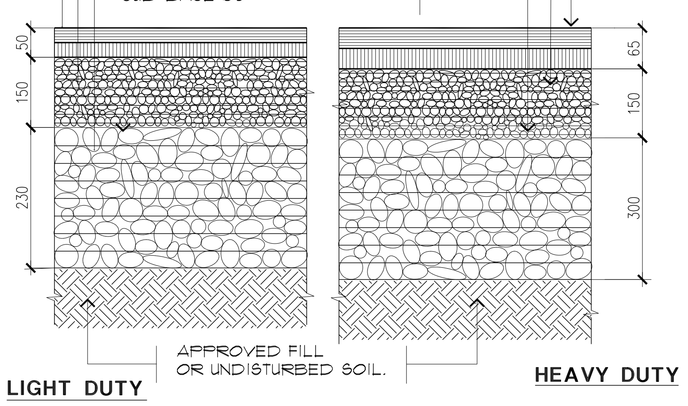

NOTE:
COMPOSITION OF BASE & SUB-BASE, INCLUDING ASPHALT SHALL BE IN ACCORDANCE WITH THE SOILS ENGINEER'S RECOMMENDATIONS.

2 ASPHALT PAVING DETAIL
SCALE: N.T.S.

NOTE:
ALL FASTENING ASSEMBLIES USED ARE TO BE PROTECTED FROM GALVANIC ACTION.

REFER TO SITEWORKS SPECIFICATIONS FOR ALL SIGNAGE DETAILS.

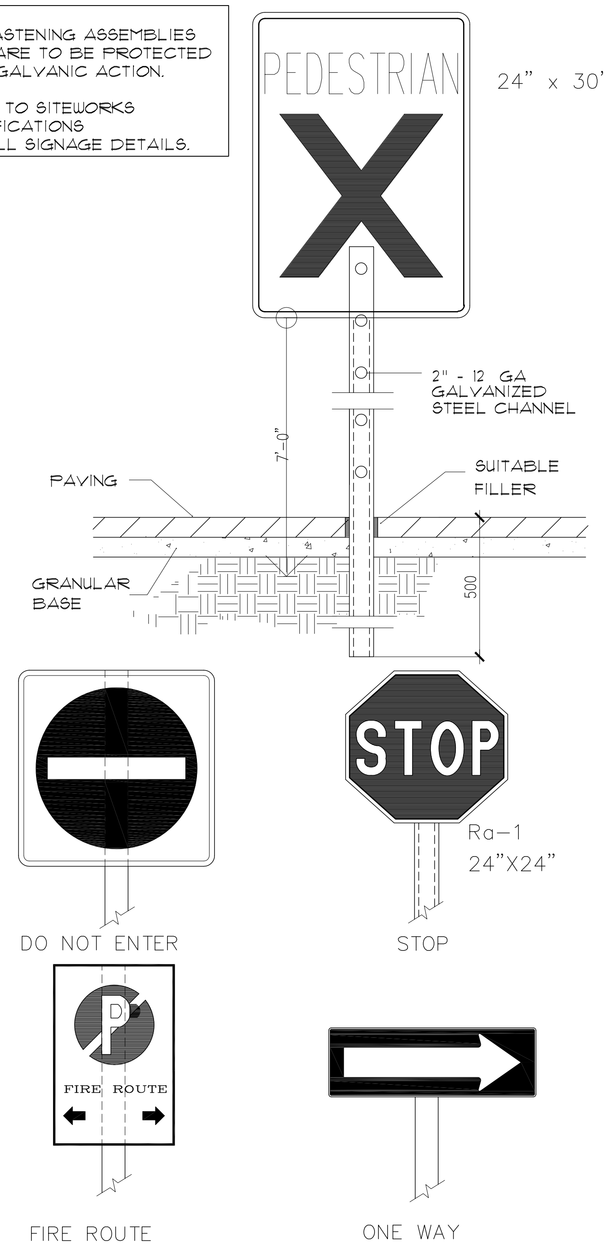

5 SIGNAGE DETAIL
SCALE: N.T.S.

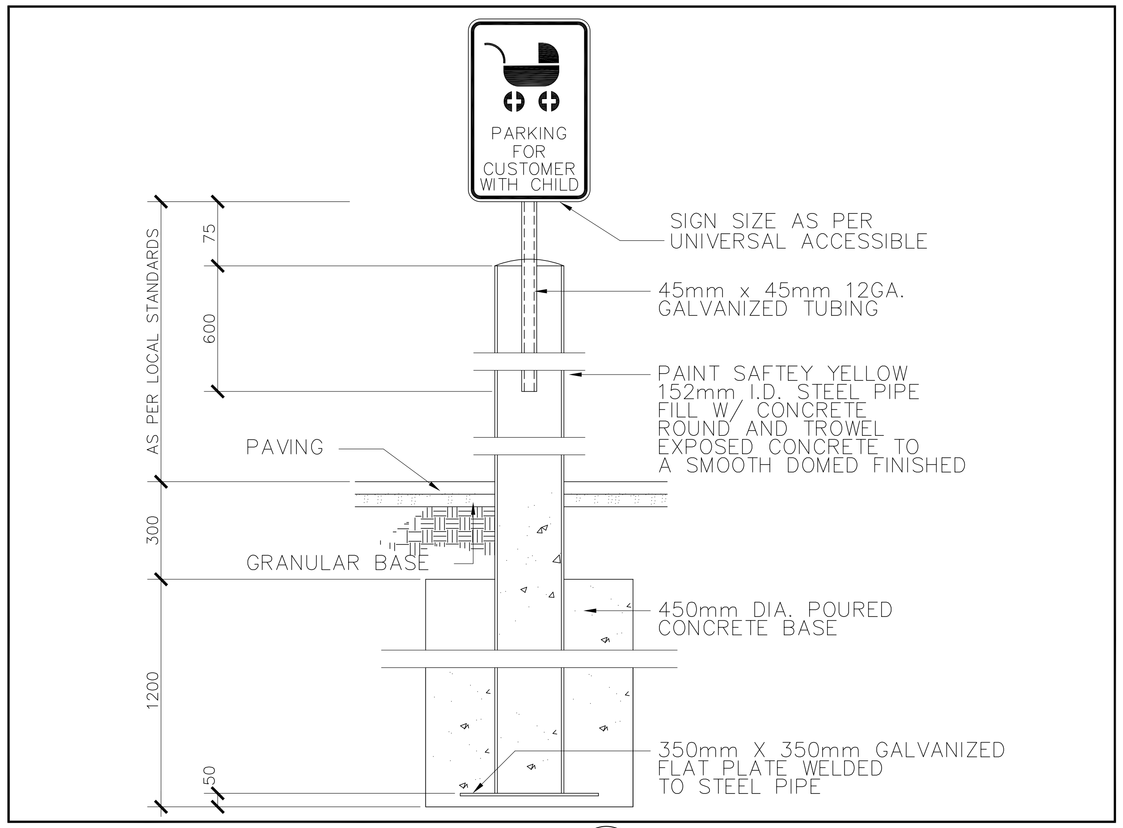

7 CUSTOMER WITH CHILD PARKING SIGN
SCALE: NTS

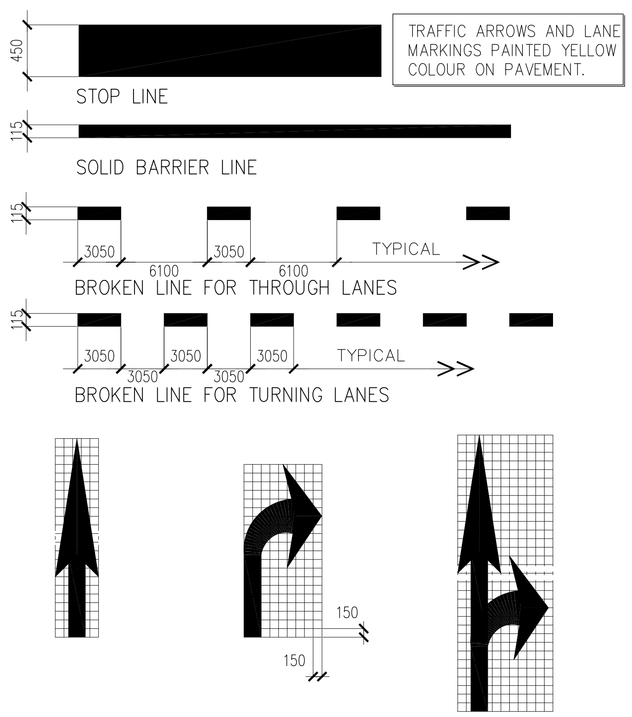

3 PAINTED MARKING DETAIL
SCALE: N.T.S.

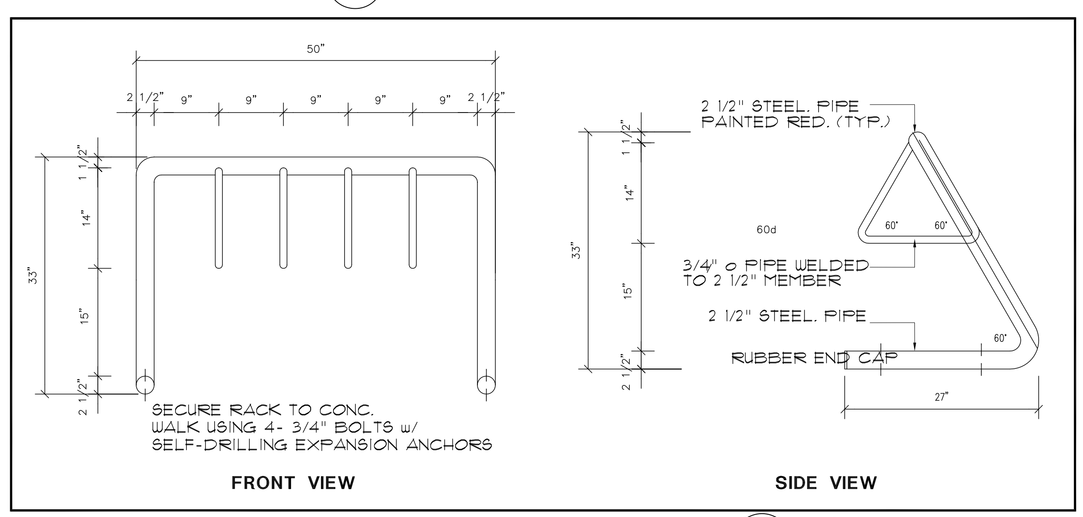

8 BYCICLE RACK DETAIL
SCALE: N.T.S.

SP-101

DATE ISSUED: 15-04-15

CITY FILE NO.:

No.	REVISIONS MARK VOID ALL COPIES PREVIOUS FINAL DATE	DATE	BY
3.			
2.			
1.	ISSUED FOR SITE PLAN APPROVAL	-	AU

Contractor must check and verify all dimensions on the job and report any discrepancies to the Architect before proceeding with the work.

Do not scale the drawing.

This drawing contains copyright material belonging to the Architect.

This drawing was developed for a specific purpose; use for any other purpose is not permitted.

This drawing shall not be reproduced in whole or in part without the written approval of the Architect.

This drawing must be read in the context of all the other drawings which constitute the document.

SITE DETAILS

SCALE: NTS

LIMEBANK & EARL ARMSTRONG
LIMEBANK ROAD & EARL ARMSTRONG ROAD
OTTAWA, ONTARIO
FOR: OWNER

PETROFF PARTNERSHIP ARCHITECTS
PETROFF
260 TOWN CENTRE BLVD. SUITE 300
MARKHAM ONTARIO CANADA L3R 8H8
TEL. 905. 470. 7000 FAX. 905. 470. 2500

DRAWN BY	RY	PROJECT No.	11159.00
CHECKED BY	A.U.		
DATE	SEPT. 16, 2011	DWG. No.	SP-101
ISSUED			