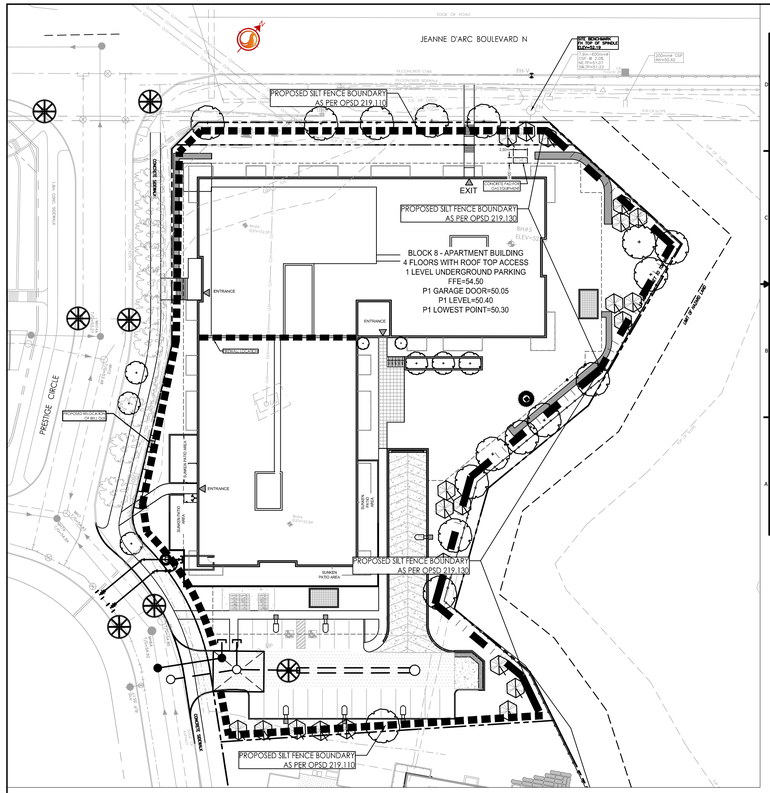

FLEXSTORM P/Ns 62MHDRFX & 62MHDRFXP

RD INLET TYPE: RAISED CAST IRON FRAME AND ROUND GRATE

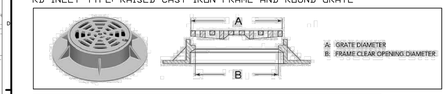

Pure Frame with FX Bag		Field Inlet Dimensions		FlexStorm Framing Dims		FlexStorm Ratings (80%)			Pure Frame with FX+ Bag	
		A	B	B1	A1	Bag Capacity (ft³)	PCPC+ Flow Rate (CFS)	Bypass (CFS)		
ADS P/N	Flexstorm Item Code								ADS P/N	Flexstorm Item Code
62MHDR	P-RD-240-218-FX	24	21.75	21.5	23.3	0.6	1.4	2.5	62MHDRFXP	P-RD-240-218-FXP
62MHDR	P-RD-223-225-FX	23.25	22	21.5	23.3	0.7	1.3	2.5	62MHDRFXP	P-RD-223-225-FXP
62MHDR	P-RD-225-215-FX	23.75	22	21.5	23.3	0.6	1.4	2.5	62MHDRFXP	P-RD-225-215-FXP
62MHDR	P-RD-218-220-FX	23.67	22	21.5	23.3	0.6	1.4	2.5	62MHDRFXP	P-RD-218-220-FXP
62MHDR	P-RD-260-205-FX	26	22	21.5	23.3	0.6	1.4	2.5	62MHDRFXP	P-RD-260-205-FXP
62MHDR	P-RD-218-221-FX	23.75	22.125	21.5	23.3	0.6	1.4	2.5	62MHDRFXP	P-RD-218-221-FXP
62MHDR	P-RD-218-215-FX	22.75	22.25	21.5	22.5	0.7	1.3	2.4	62MHDRFXP	P-RD-218-215-FXP
62MHDR	P-RD-215-215-FX	23.75	22.25	21.5	23.3	0.6	1.4	2.5	62MHDRFXP	P-RD-215-215-FXP
62MHDR	P-RD-240-223-FX	24	22.25	21.5	23.3	0.6	1.4	2.5	62MHDRFXP	P-RD-240-223-FXP
62MHDR	P-RD-218-224-FX	23.75	22.375	21.5	23.3	0.6	1.4	2.5	62MHDRFXP	P-RD-218-224-FXP
62MHDR	P-RD-218-214-FX	23.67	22.375	21.5	23.3	0.6	1.4	2.5	62MHDRFXP	P-RD-218-214-FXP
62MHDR	P-RD-218-204-FX	23.75	22.5	21.5	23.3	0.6	1.4	2.5	62MHDRFXP	P-RD-218-204-FXP
62MHDR	P-RD-240-225-FX	24	22.5	21.5	23.3	0.6	1.4	2.5	62MHDRFXP	P-RD-240-225-FXP
62MHDR	P-RD-240-205-FX	24.75	22.62	22.5	24.5	0.6	1.4	2.6	62MHDRFXP	P-RD-240-205-FXP
62MHDR	P-RD-218-203-FX	23.67	22.75	21.5	23.3	0.6	1.4	2.5	62MHDRFXP	P-RD-218-203-FXP
62MHDR	P-RD-236-205-FX	23.75	23	21.5	23.3	0.6	1.4	2.5	62MHDRFXP	P-RD-236-205-FXP
62MHDR	P-RD-260-206-FX	24	23	21.5	23.3	0.6	1.4	2.5	62MHDRFXP	P-RD-260-206-FXP
62MHDR	P-RD-250-206-FX	25	23	22.5	24.5	0.6	1.4	2.6	62MHDRFXP	P-RD-250-206-FXP
62MHDR	P-RD-254-206-FX	25.375	23	22.5	24.5	0.6	1.4	2.6	62MHDRFXP	P-RD-254-206-FXP
62MHDR	P-RD-250-205-FX	25.62	23	22.5	24.5	0.6	1.4	2.6	62MHDRFXP	P-RD-250-205-FXP
62MHDR	P-RD-258-205-FX	25.75	23	22.5	24.5	0.6	1.4	2.6	62MHDRFXP	P-RD-258-205-FXP
62MHDR	P-RD-244-204-FX	24.75	23.125	22.5	24.5	0.6	1.4	2.6	62MHDRFXP	P-RD-244-204-FXP
62MHDR	P-RD-260-235-FX	26	23.5	23.5	25.5	0.9	1.5	2.7	62MHDRFXP	P-RD-260-235-FXP
62MHDR	P-RD-256-236-FX	25.75	23.62	23.5	25.5	0.9	1.5	2.7	62MHDRFXP	P-RD-256-236-FXP
62MHDR	P-RD-258-236-FX	25.75	23.812	23.5	25.5	0.9	1.5	2.7	62MHDRFXP	P-RD-258-236-FXP
62MHDR	P-RD-240-245-FX	25.25	24	23.5	24.5	0.9	1.5	2.6	62MHDRFXP	P-RD-240-245-FXP
62MHDR	P-RD-256-245-FX	25.75	24	23.5	25.5	0.9	1.5	2.7	62MHDRFXP	P-RD-256-245-FXP
62MHDR	P-RD-260-246-FX	26	24	23.5	25.5	1.0	1.5	2.7	62MHDRFXP	P-RD-260-246-FXP
62MHDR	P-RD-260-245-FX	26.75	24	23.5	25.5	1.0	1.5	2.7	62MHDRFXP	P-RD-260-245-FXP
62MHDR	P-RD-260-241-FX	26	24.1	23.5	25.5	1.0	1.5	2.7	62MHDRFXP	P-RD-260-241-FXP
62MHDR	P-RD-250-241-FX	26.25	24.1	23.5	25.5	1.0	1.5	2.7	62MHDRFXP	P-RD-250-241-FXP
62MHDR	P-RD-254-241-FX	25.75	24.125	23.5	25.5	0.9	1.5	2.7	62MHDRFXP	P-RD-254-241-FXP
62MHDR	P-RD-256-241-FX	25.75	24.25	23.5	25.5	0.9	1.5	2.7	62MHDRFXP	P-RD-256-241-FXP

NOTES:

1. RATINGS SHOWN ARE FOR STANDARD 22" BAG DEPTH; "SHORT" 12" DEPTH BAGS ARE AVAILABLE WITH -S SUFFIX; RATINGS REDUCED BY ~50%.
2. THE FOLLOWING REQUIRES ADDITIONAL REVIEW
-GRATES WITH EXTENDED BOTTOMS
-ANY OBSTRUCTED INLET OPENINGS

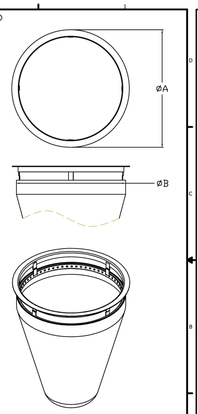

FLEXSTORM INLET FILTERS PURE

ALL PRODUCTS MANUFACTURED BY INLET & PIPE PROTECTION, INC A DIVISION OF ADS, INC.
WWW.INLETFILTERS.COM
(866) 287-8655 PH
(630) 355-3477 FX
INFO@INLETFILTERS.COM

SIZE	FRAME TYPE	PART NO.	REV.
C	HDR	RD-62MHDR-FX	A

SHEET 3 OF 2

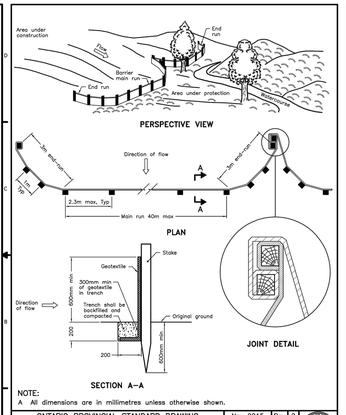

NOTE:
A All dimensions are in millimetres unless otherwise shown.

ONTARIO PROVINCIAL STANDARD DRAWING	Nov 2015	Rev 2
LIGHT–DUTY SILT FENCE BARRIER		OPSD 219.110

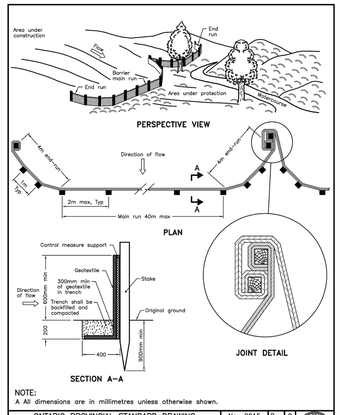

NOTE:
A All dimensions are in millimetres unless otherwise shown.

ONTARIO PROVINCIAL STANDARD DRAWING	Nov 2015	Rev 2
HEAVY–DUTY SILT FENCE BARRIER		OPSD 219.130

GIWildman

GERALDINE WILDMAN
ACTING MANAGER, DEVELOPMENT REVIEW EAST
PLANNING, REAL ESTATE & ECONOMIC DEVELOPMENT
DEPARTMENT, CITY OF OTTAWA

APPROVED
By wildmange at 7:25 pm, Jun 01, 2022

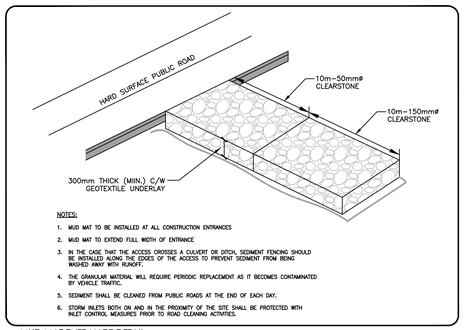

NOTES:
1. MUD MAT TO BE INSTALLED AT ALL CONSTRUCTION ENTRANCES
2. MUD MAT TO EXTEND FULL WIDTH OF ENTRANCE
3. IN THE CASE THAT THE ACCESS CROSSES A CULVERT OR DITCH, SEDIMENT FENCING SHOULD BE INSTALLED ALONG THE EDGES OF THE ACCESS TO PREVENT SEDIMENT FROM BEING WASHED AWAY WITH RUNOFF.
4. THE GRANULAR MATERIAL WILL REQUIRE PERIODIC REPLACEMENT AS IT BECOMES CONTAMINATED BY VEHICLE TRAFFIC.
5. SEDIMENT SHALL BE CLEANED FROM PUBLIC ROADS AT THE END OF EACH DAY.
6. STORM INLETS BOTH ON AND IN THE PROXIMITY OF THE SITE SHALL BE PROTECTED WITH INLET CONTROL MEASURES PRIOR TO ROAD CLEANING ACTIVITIES.

MUD MAT ENTRANCE DETAIL
SCALE: N.T.S.

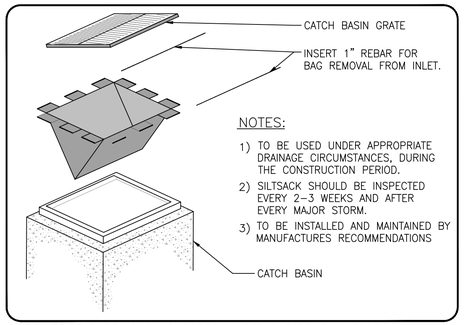

NOTES:
1) TO BE USED UNDER APPROPRIATE DRAINAGE CIRCUMSTANCES, DURING THE CONSTRUCTION PERIOD.
2) SILTSACK SHOULD BE INSPECTED EVERY 2–3 WEEKS AND AFTER EVERY MAJOR STORM.
3) TO BE INSTALLED AND MAINTAINED BY MANUFACTURES RECOMMENDATIONS

ROADSIDE CATCH BASIN PROTECTION DETAIL: TERRAFIX SILTSACK
SCALE: N.T.S.

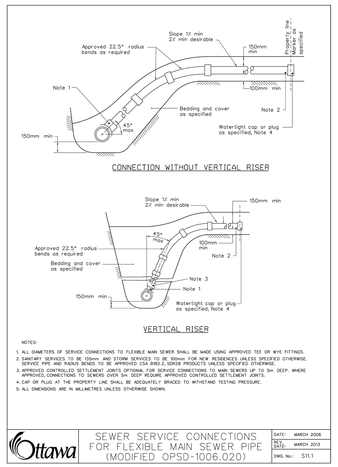

NOTES:
1. ALL DIAMETERS OF SERVICE CONNECTIONS TO FLEXIBLE MAIN SEWER SHALL BE MADE USING APPROVED TEE OR WYE FITTINGS.
2. SANITARY SERVICES TO Ø1.125m AND STORM SERVICES TO Ø1.100m FOR NEW RESIDENCES UNLESS SPECIFIED OTHERWISE.
3. SERVICE TO BE SET AT 45° TO THE MAIN WITH 0.9m MINIMUM HORIZONTAL SEPARATION UNLESS OTHERWISE.
4. APPROVED CONTROLLED SETTLEMENT JOINTS OPTIONAL FOR SERVICE CONNECTIONS TO MAIN SEWERS UP TO 5m DEEP; WHERE APPROVED, CONNECTIONS TO SEWERS OVER 5m DEEP REQUIRE APPROVED CONTROLLED SETTLEMENT JOINTS.
4. CAP OR PLUG AT THE PROPERTY LINE SHALL BE ADEQUATELY BRACED TO WITHSTAND TESTING PRESSURE.
5. ALL DIMENSIONS ARE IN MILLIMETRES UNLESS OTHERWISE SHOWN.

Ottawa	SEWER SERVICE CONNECTIONS FOR FLEXIBLE MAIN SEWER PIPE (MODIFIED OPSD-1006.020)	DATE: MARCH 2008 REV. DATE: MARCH 2012 DWG. No.: S11.1

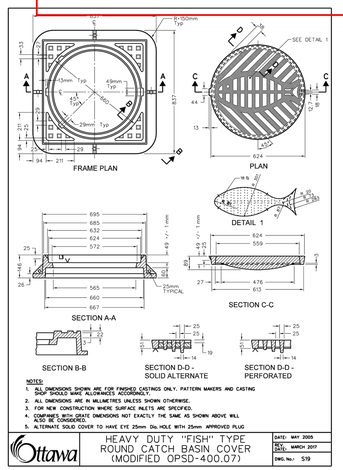

NOTES:
1. ALL DIMENSIONS SHOWN ARE FOR FINISHED CASTINGS ONLY. PATTERN MAKERS AND CASTING FOUNDRIES SHOULD MAKE ALLOWANCES ACCORDINGLY.
2. ALL DIMENSIONS ARE IN MILLIMETRES UNLESS SHOWN OTHERWISE.
3. FOR NEW CONSTRUCTION WHERE SURFACE INLETS ARE SPECIFIED.
4. COMPANIES WITH CREATE DIMENSIONS NOT EXACTLY THE SAME AS SHOWN ABOVE WILL ALSO BE CONSIDERED.
5. ALTERNATE SOLID COVER TO HAVE EYE 25mm Dia. HOLE WITH 25mm APPROVED PLUG

Ottawa	HEAVY DUTY "FISH" TYPE ROUND CATCH BASIN COVER (MODIFIED OPSD-400.07)	DATE: MAY 2005 REV. DATE: MARCH 2017 DWG. No.: S19

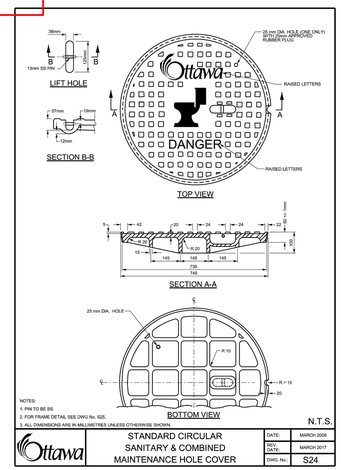

NOTES:
1. PIN TO BE SS.
2. FOR FRAME DETAIL, SEE DWG No. S25.
3. ALL DIMENSIONS ARE IN MILLIMETRES UNLESS OTHERWISE SHOWN.

N.T.S.

Ottawa	STANDARD CIRCULAR SANITARY & COMBINED MAINTENANCE HOLE COVER	DATE: MARCH 2015 REV. DATE: MARCH 2017 DWG. No.: S24

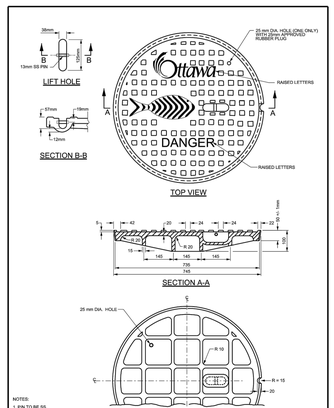

NOTES:
1. PIN TO BE SS.
2. FOR FRAME DETAIL, SEE DWG No. S25.
3. ALL DIMENSIONS ARE IN MILLIMETRES UNLESS OTHERWISE SHOWN.

N.T.S.

Ottawa	STANDARD CIRCULAR STORM MAINTENANCE HOLE COVER	DATE: MARCH 2010 REV. DATE: MARCH 2017 DWG. No.: S24.1

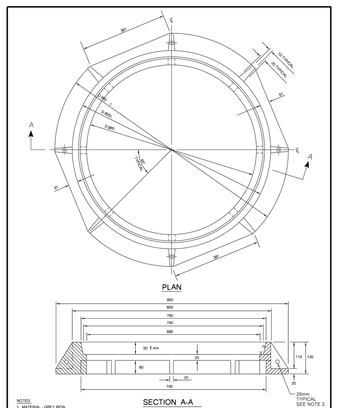

NOTES:
1. MATERIAL: GREY IRON.
2. FOR MAINTENANCE HOLE COVER SEE DWG S24, S24.1, S24.2.
3. OPSD 400.031 HOISTING HOOKS ARE ALSO ACCEPTED.
4. ALL DIMENSIONS ARE IN mm UNLESS OTHERWISE SHOWN.

Ottawa	STANDARD CIRCULAR FRAME FOR MAINTENANCE HOLES (MODIFIED OPSD-401.020)	DATE: MAY 2001 REV. DATE: MARCH 2015 DWG. No.: S25

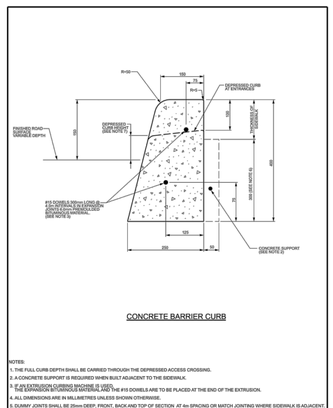

NOTES:
1. THE FULL CURB DEPTH SHALL BE CARRIED THROUGH THE DEPRESSED ACCESS CROSSING.
2. A CONCRETE SUPPORT IS REQUIRED WHEN BUILT ADJACENT TO THE SIDEWALK.
3. IF AN EXTRUSION CURBING MACHINE IS USED, THE EXPANSION BITUMINOUS MATERIAL AND THE #15 DOWELS ARE TO BE PLACED AT THE END OF THE EXTRUSION.
4. ALL DIMENSIONS ARE IN MILLIMETRES UNLESS SHOWN OTHERWISE.
5. DUMMY JOINTS SHALL BE 25mm DEEP, FRONT, BACK AND TOP OF SECTION AT 4m SPACING OR MATCH JOINTING WHERE SIDEWALK IS ADJACENT.
6. FOR DEPRESSED CURB AT ENTRANCES USE Ø5.
7. DEPRESSED CURB HEIGHT - FOR PEDESTRIAN CURB RAMPS 0 TO 6 mm AND FOR PRIVATE ENTRANCES 0 TO 13mm.

N.T.S.

Ottawa	CONCRETE BARRIER CURB FOR GRANULAR BASE PAVEMENT (MODIFIED OPSD-600.110)	DATE: JANUARY 2003 REV. DATE: MARCH 2021 DWG. No.: SC1.1

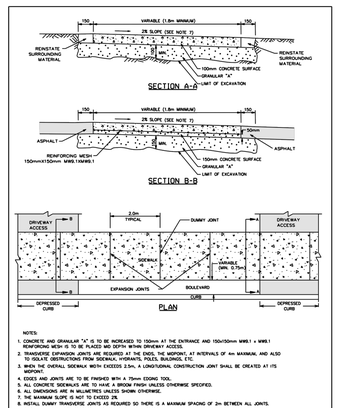

NOTES:
1. CONCRETE AND GRANULAR "A" IS TO BE INCREASED TO 150mm AT THE ENTRANCE AND 150x150mm WWR.1 x WWR.1 REINFORCING MESH IS TO BE PLACED AND DOWN DRIVEWAY ACCESS.
2. EXPANSION EXPANSION JOINTS ARE REQUIRED AT THE END, THE MIDPOINT, AT INTERVALS OF 4m MAXIMUM, AND ALSO TO ISOLATE OBSTRUCTIONS FROM SIDEWALK (HYDRANTS, POLES, BUILDINGS, ETC.
3. WHEN THE OVERALL SIDEWALK WIDTH EXCEEDS 2.5m, A LONGITUDINAL CONSTRUCTION JOINT SHALL BE CREATED AT ITS MIDPOINT.
4. EDGES AND JOINTS ARE TO BE FINISHED WITH A 75mm EDGING TOOL.
5. ALL CONCRETE SIDEWALKS ARE TO HAVE A BROOM FINISH UNLESS OTHERWISE SPECIFIED.
6. ALL DIMENSIONS ARE IN MILLIMETRES UNLESS SHOWN OTHERWISE.
7. THE MAXIMUM SLOPE IS NOT TO EXCEED 2%.
8. INSTALL DUMMY TRANSVERSE JOINTS AS REQUIRED SO THERE IS A MAXIMUM SPACING OF 2m BETWEEN ALL JOINTS.
9. SIDEWALK NOT TO BE DEPRESSED ACROSS DRIVEWAY ACCESSES.
10. EXPANSION AND DUMMY JOINTS AS PER SC3

Ottawa	TYPICAL CONCRETE SIDEWALK IN BOULEVARD	DATE: MAY 2001 REV. DATE: MARCH 2016 DWG. No.: SC4

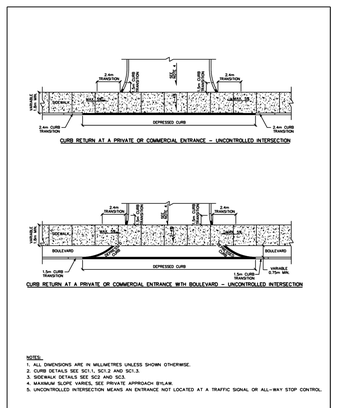

NOTES:
1. ALL DIMENSIONS ARE IN MILLIMETRES UNLESS SHOWN OTHERWISE.
2. CURB DETAILS SEE SC1.1, SC1.2 AND SC1.3
3. SIDEWALK DETAILS SEE SC2 AND SC3.
4. MAXIMUM SLOPE VARIES, SEE PRIVATE APPROACH BYLAW.
5. UNCONTROLLED INTERSECTION MEANS AN ENTRANCE NOT LOCATED AT A TRAFFIC SIGNAL OR ALL-WAY STOP CONTROL.

Ottawa	CURB RETURN ENTRANCES - UNCONTROLLED INTERSECTIONS	DATE: MARCH 2007 REV. DATE: MARCH 2021 DWG. No.: SC7.1

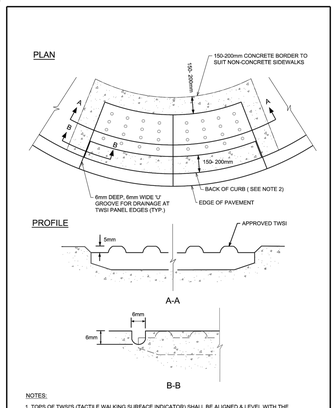

NOTES:
1. TOPS OF TWSI'S (TACTILE WALKING SURFACE INDICATOR) SHALL BE ALIGNED & LEVEL WITH THE ADJACENT CONCRETE SURFACE & INSTALLATION IN WET CONCRETE SHALL BE EFFECTIVE IN PERMANENTLY SECURING THE TWSI IN PLACE ONCE DRY.
2. FOR MONOLITHIC SIDEWALKS, TWSI SHALL BE 300 TO 350mm BACK FROM THE CURB FACE.

N.T.S.

Ottawa	TWSI DETAIL	DATE: MARCH 2015 REV. DATE: MARCH 2019 DWG. No.: SC7.3

Stantec

Stantec Consulting Ltd.
400 - 1331 Clyde Avenue
Ottawa ON
Tel. 613.722.4420
www.stantec.com

Copyright Reserved

The Contractor shall verify and be responsible for all dimensions. DO NOT scale the drawing - any errors or omissions shall be reported to Stantec without delay.
The Copyrights to all designs and drawings are the property of Stantec. Reproduction or use for any purpose other than that authorized by Stantec is forbidden.

Legend

- PROPOSED SILT FENCE BOUNDARY AS PER OPSD 219.110
- PROPOSED SILT FENCE BOUNDARY AS PER OPSD 219.130
- PROPOSED MUD MAT LOCATION
- PROPOSED CATCH BASIN PROTECTION AS PER TERRAFIX SILTSACK DETAIL.
- PROPOSED CATCH BASIN PROTECTION AS PER FLEX STORM INLET FILTERS DETAIL. ITEM CODE P-RD-240-223-FX

Notes

Best Management Practices

CONTRACTOR TO PROVIDE EROSION AND SEDIMENT CONTROLS (BEST MANAGEMENT PRACTICES) DURING CONSTRUCTION OF THIS PROJECT.

EROSION MUST BE MINIMIZED AND SEDIMENTS MUST BE REMOVED FROM CONSTRUCTION SITE RUN-OFF IN ORDER TO PROTECT DOWNSTREAM AREAS. DURING ALL CONSTRUCTION, EROSION AND SEDIMENTATION SHOULD BE CONTROLLED BY THE FOLLOWING TECHNIQUES:

1. LIMIT THE EXTENT OF EXPOSED SOILS AT ANY GIVEN TIME.
2. REVEGETATE EXPOSED AREAS AND SLOPES AS SOON AS POSSIBLE.
3. MINIMIZE AREA TO BE CLEARED AND GRUBBED.
4. PROTECT EXPOSED SLOPES WITH PLASTIC OR SYNTHETIC MULCHES.
5. INSTALL CATCH BASIN INSERTS OR EQUIVALENT IN ALL PROPOSED CATCH BASINS AND CATCH BASIN MANHOLES AND IN ALL EXISTING CATCH BASINS THAT WILL RECEIVE RUN-OFF FROM THE SITE.
6. A SILT FENCE SHALL BE INSTALLED AROUND THE PERIMETER OF ALL AND ANY STOCKPILES OF MATERIAL TO BE USED OR REMOVED FROM SITE. (LOCATION TO BE DETERMINED)
7. A VISUAL INSPECTION SHALL BE DONE DAILY ON SEDIMENT CONTROL MEASURES AND CLEANED OF ANY ACCUMULATED SILT AS REQUIRED. THE DEPOSITS WILL BE DISPOSED OFF SITE AS PER THE REQUIREMENTS OF THE CONTRACT.
8. SEDIMENT CONTROL BARRIERS MAY ONLY BE REMOVED TEMPORARILY WITH APPROVAL OF CONTRACT ADMINISTRATOR TO ACCOMMODATE CONSTRUCTION OPERATIONS. ALL AFFECTED BARRIERS MUST BE REINSTATED AT NIGHT WHEN CONSTRUCTION IS COMPLETED. NO REMOVAL WILL OCCUR IF THERE IS A SIGNIFICANT RAINFALL EVENT ANTICIPATED (>10mm) UNLESS A NEW DEVICE HAS BEEN INSTALLED TO PROTECT EXISTING STORM AND SANITARY SEWER SYSTEMS, OR DOWNSTREAM WATERCOURSES.
9. NO REFUELING OR CLEANING OF EQUIPMENT IS PERMITTED NEAR ANY EXISTING WATERWAY.
10. CONTRACTOR SHALL REMOVE SEDIMENT CONTROL MEASURES WHEN, IN THE OPINION OF THE CONTRACT ADMINISTRATOR, THE MEASURE(S) IS NO LONGER REQUIRED. NO CONTROL MEASURES SHALL BE PERMANENTLY REMOVED WITHOUT PRIOR WRITTEN AUTHORIZATION FROM THE CONTRACT ADMINISTRATOR.
11. THE CONTRACTOR SHALL PERIODICALLY, OR WHEN REQUESTED BY THE CONTRACT ADMINISTRATOR, CLEAN OUT ACCUMULATED SEDIMENTS AS REQUIRED.
12. THE CONTRACTOR SHALL IMMEDIATELY REPORT TO THE ENGINEER ANY ACCIDENTAL DISCHARGES OF SEDIMENT MATERIAL INTO THE WATERCOURSE. APPROPRIATE RESPONSE MEASURES, INCLUDING ANY REPAIRS TO EXISTING CONTROL MEASURES OR THE IMPLEMENTATION OF ADDITIONAL CONTROL MEASURES, SHALL BE CARRIED OUT BY THE CONTRACTOR WITHOUT DELAY.
13. CONTRACTOR SHALL INSTALL MUD MATS AT ALL ENTRANCES TO THE SITE.

Revision		By	Appd.	YY.MM.DD
4	REVISED AS PER CITY COMMENTS	MJS	AMP	22.02.16
3	ISSUED FOR TENDER	MJS	KH	21.10.01
2	REVISED AS PER CITY COMMENTS	MJS	TR	21.09.20
1	REVISED AS PER NEW SITE PLAN AND CITY COMMENTS	MJS	AMP	21.03.24
0	ISSUED FOR SPA	MJS	AMP	19.12.13

File Name: 160401331 D82.dwg	MJS	AMP	MJS	19.06.20
	Dwn.	Chkd.	Dsgn.	YY.MM.DD

Permit-Seal

LICENSED PROFESSIONAL ENGINEER
A.M. PAEREZ FERNANDEZ
100105130
2022-02-17
PROVINCE OF ONTARIO

Client/Project

BRIGIL
PETRIE'S LANDING II

BLOCK 8
180 Prestige Circle
OTTAWA, ON, CANADA

Title

EROSION CONTROL PLAN AND DETAIL SHEET

Project No.	Scale	Sheet	Revision
160401331	1:500 (0 5 15 25m)	4 of 6	4

Drawing No.: EC/DS-1

D07-12-19-0212

18062

V:\01-604-Ottawa\1-604\0131 Petries Landing Block 6-8\design\drawing\ Block 8\ (604\0131 D82.dwg
2022/02/16 8:39 AM By: Sharp, Mavis

ORIGINAL SHEET - ARCH D