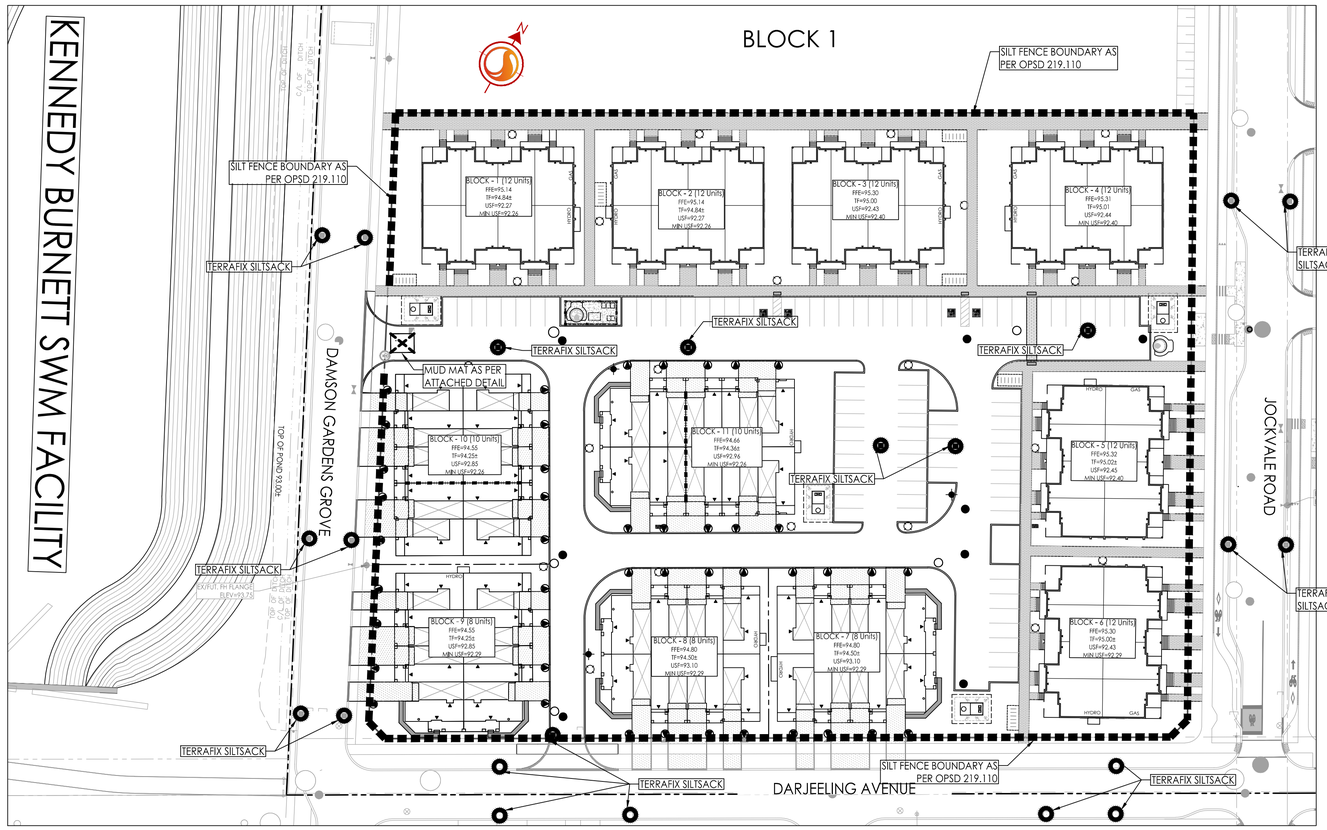

APPROVED
By Lily Xu at 12:14 pm, Mar 17, 2021

LILY XU, MCIP, RPP
MANAGER, DEVELOPMENT REVIEW SOUTH
PLANNING, INFRASTRUCTURE & ECONOMIC DEVELOPMENT DEPARTMENT, CITY OF OTTAWA

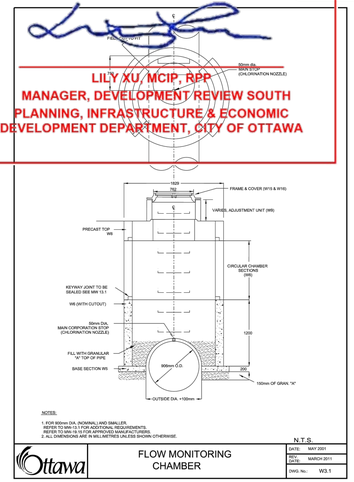

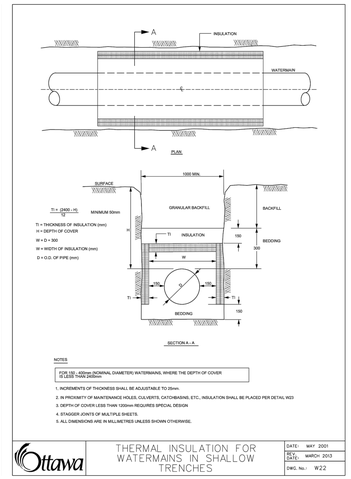

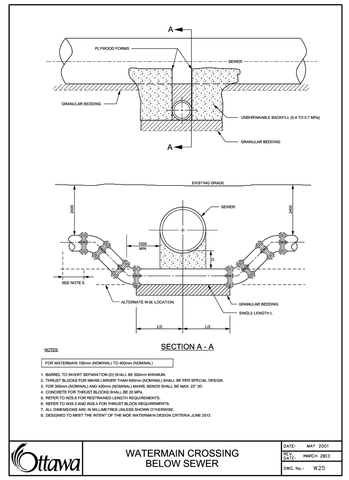

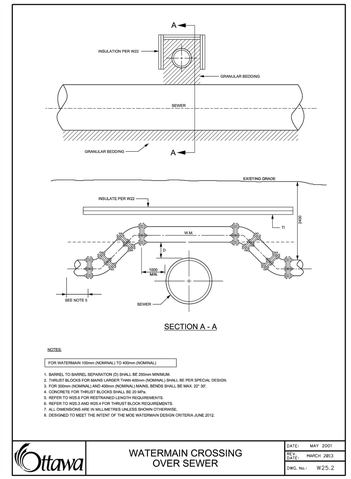

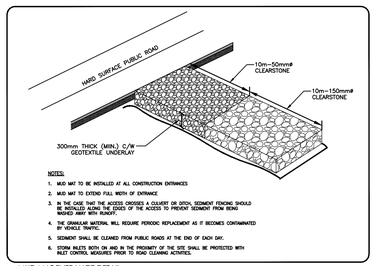

MUD MAT ENTRANCE DETAIL
SCALE N.T.S.

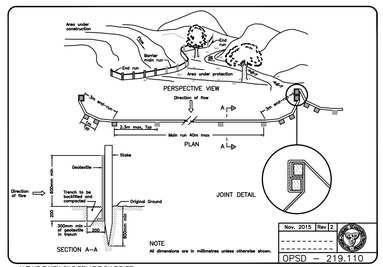

LIGHT DUTY SILT FENCE BARRIER
SCALE N.T.S.

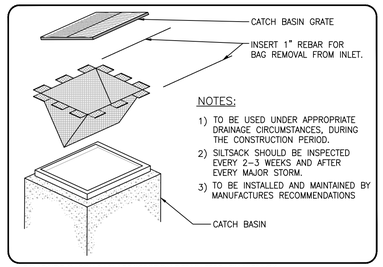

ROADSIDE CATCH BASIN PROTECTION DETAIL: TERRAFIX SILTSACK
SCALE N.T.S.

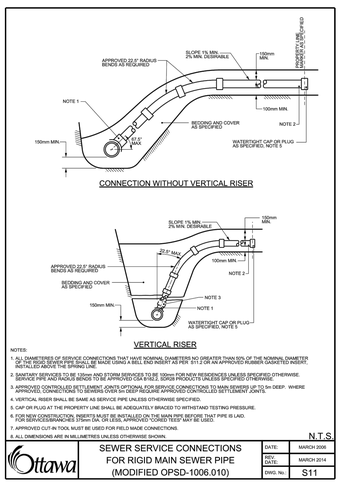

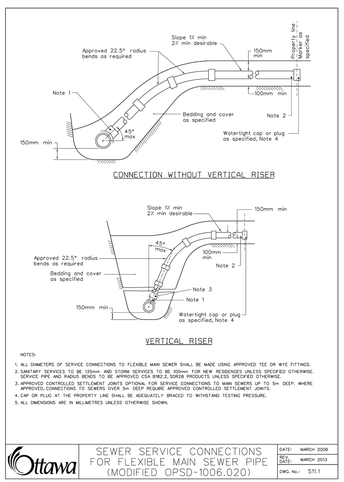

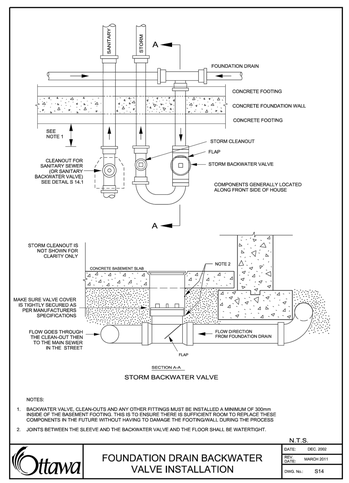

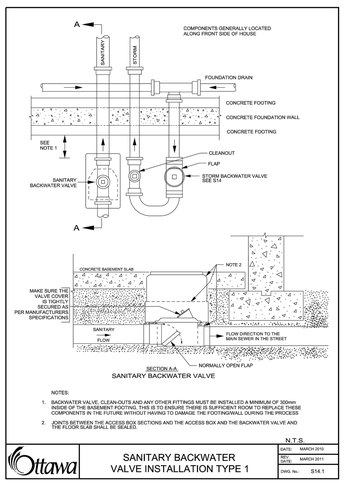

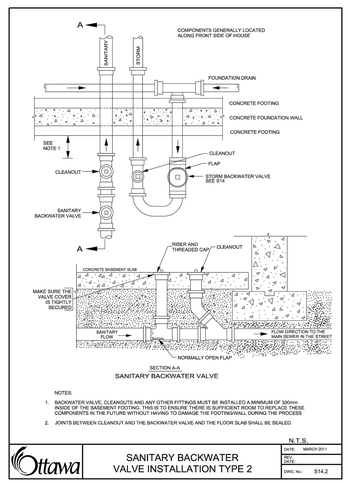

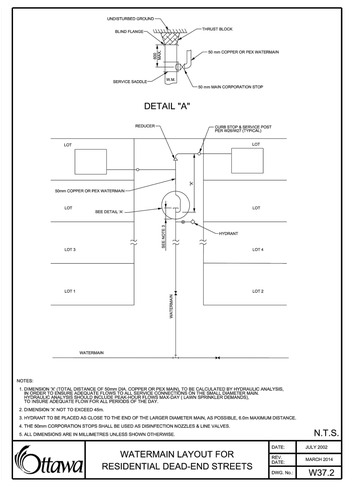

Stantec

Stantec Consulting Ltd.
400 - 1331 Clyde Avenue
Ottawa ON
Tel. 613.722.4420
www.stantec.com

Copyright Reserved

The Contractor shall verify and be responsible for all dimensions. DO NOT scale the drawing - any errors or omissions shall be reported to Stantec without delay.
The Copyrights to all designs and drawings are the property of Stantec. Reproduction or use for any purpose other than that authorized by Stantec is forbidden.

Legend

- PROPOSED SILT FENCE BOUNDARY AS PER OPSD 219.110
- PROPOSED CATCH BASIN PROTECTION AS PER DETAIL.
- PROPOSED MUD MAT LOCATION
- PROPOSED VALVE BOX
- PROPOSED VALVE CHAMBER
- PROPOSED FIRE HYDRANT
- PROPOSED SANITARY SEWER MANHOLE
- PROPOSED STORM SEWER MANHOLE
- PROPOSED CATCHBASIN

Best Management Practices

CONTRACTOR TO PROVIDE EROSION AND SEDIMENT CONTROLS (BEST MANAGEMENT PRACTICES) DURING CONSTRUCTION OF THIS PROJECT. THE CONTRACTOR SHALL IMPLEMENT BEST MANAGEMENT PRACTICES, TO PROVIDE FOR PROTECTION OF THE AREA DRAINAGE SYSTEM AND THE RECEIVING WATERCOURSE, DURING CONSTRUCTION ACTIVITIES. THE CONTRACTOR ACKNOWLEDGES THAT FAILURE TO IMPLEMENT APPROPRIATE EROSION AND SEDIMENT CONTROL MEASURES MAY BE SUBJECT TO PENALTIES IMPOSED BY ANY APPLICABLE REGULATORY AGENCY.

EROSION MUST BE MINIMIZED AND SEDIMENTS MUST BE REMOVED FROM CONSTRUCTION SITE RUN-OFF IN ORDER TO PROTECT DOWNSTREAM AREAS. DURING ALL CONSTRUCTION, EROSION AND SEDIMENTATION SHOULD BE CONTROLLED BY THE FOLLOWING TECHNIQUES:

1. LIMIT THE EXTENT OF EXPOSED SOILS AT ANY GIVEN TIME.
2. REVEGETATE EXPOSED AREAS AND SLOPES AS SOON AS POSSIBLE.
3. MINIMIZE AREA TO BE CLEARED AND GRUBBED.
4. PROTECT EXPOSED SLOPES WITH PLASTIC OR SYNTHETIC MULCHES.
5. INSTALL CATCH BASIN INSERTS OR EQUIVALENT IN ALL PROPOSED CATCH BASINS AND CATCH BASIN MANHOLES AND IN ALL EXISTING CATCH BASINS THAT WILL RECEIVE RUN-OFF FROM THE SITE.
6. A SILT FENCE SHALL BE INSTALLED AROUND THE PERIMETER OF ALL AND ANY STOCKPILES OF MATERIAL TO BE USED OR REMOVED FROM SITE. (LOCATION TO BE DETERMINED)
7. A VISUAL INSPECTION SHALL BE DONE DAILY ON SEDIMENT CONTROL MEASURES AND CLEANED OF ANY ACCUMULATED SILT AS REQUIRED. THE DEPOSITS WILL BE DISPOSED OFF SITE AS PER THE REQUIREMENTS OF THE CONTRACT.
8. SEDIMENT CONTROL BARRIERS MAY ONLY BE REMOVED TEMPORARILY WITH APPROVAL OF CONTRACT ADMINISTRATOR TO ACCOMMODATE CONSTRUCTION OPERATIONS. ALL AFFECTED BARRIERS MUST BE REINSTATED AT NIGHT WHEN CONSTRUCTION IS COMPLETED. NO REMOVAL WILL OCCUR IF THERE IS A SIGNIFICANT RAINFALL EVENT ANTICIPATED (>10mm) UNLESS A NEW DEVICE HAS BEEN INSTALLED TO PROTECT EXISTING STORM AND SANITARY SEWER SYSTEMS, OR DOWNSTREAM WATERCOURSES.
9. NO REFUELING OR CLEANING OF EQUIPMENT IS PERMITTED NEAR ANY EXISTING WATERWAY.
10. CONTRACTOR SHALL REMOVE SEDIMENT CONTROL MEASURES WHEN, IN THE OPINION OF THE CONTRACT ADMINISTRATOR, THE MEASURE(S) IS NO LONGER REQUIRED. NO CONTROL MEASURES SHALL BE PERMANENTLEY REMOVED WITHOUT PRIOR WRITTEN AUTHORIZATION FROM THE CONTRACT ADMINISTRATOR.
11. THE CONTRACTOR SHALL PERIODICALLY, OR WHEN REQUESTED BY THE CONTRACT ADMINISTRATOR, CLEAN OUT ACCUMULATED SEDIMENTS AS REQUIRED.
12. THE CONTRACTOR SHALL IMMEDIATELY REPORT TO THE ENGINEER ANY ACCIDENTAL DISCHARGES OF SEDIMENT MATERIAL INTO THE WATERCOURSE. APPROPRIATE RESPONSE MEASURES, INCLUDING ANY REPAIRS TO EXISTING CONTROL MEASURES OR THE IMPLEMENTATION OF ADDITIONAL CONTROL MEASURES, SHALL BE CARRIED OUT BY THE CONTRACTOR WITHOUT DELAY.
13. CONTRACTOR SHALL INSTALL MUD MATS AT ENTRANCE TO THE SITE.
14. STORMWATER SWALES TO BE COVERED WITH HYDRO-SEED AND MULCH.

Revision		By	Appd.	YY.MM.DD
4	REVISED AS PER CITY COMMENTS	MJS	TR	21.01.19
3	REVISED AS PER CITY COMMENTS	MJS	TR	20.12.01
2	REVISED AS PER CITY COMMENTS	MJS	TR	20.10.21
1	REVISED AS PER CITY COMMENTS	MJS	TR	20.08.05
0	ISSUED TO CITY FOR SPA	MJS	TR	20.05.01

File Name: 160401085 BLK 4 DB	MJS	AMP	MJS	20.02.25
	Dwn.	Chkd.	Dsgn.	YY.MM.DD

Permit-Seal

LICENSED PROFESSIONAL ENGINEER
T.K. RATHINASOORIYA
100225159
2021-01-19
PROVINCE OF ONTARIO

Client/Project
NEPEAN TOWN CENTRE DEVELOPMENT CORPORATION
2934 BASELINE ROAD, SUITE 302, OTTAWA, ON, K2H 1B2
PH: (613) 518-1864
SNTC LANDS
BLOCK 4
OTTAWA, ON

Title
EROSION CONTROL PLAN AND DETAILS

Project No. 160401085

Scale 1:500 (0 5 15 25m)

Drawing No. EC/DS-1

Sheet 4 of 7

Revision 4

PLAN # 18168

D07-12-20-0058

V:\01-604-Ott\Ott\1-160401085_Cortex SNTC Lands\design\drawing\DETAILED DESIGN\Detailed Site Plan Design\Block 4\160401085 BLK 4 DB.dwg
2021(01)19 11:21 AM By: Shapiro, Mike

ORIGINAL SHEET - ARCH D