GENERAL NOTES

1. ALL WORKS AND MATERIALS SHALL CONFORM TO THE LATEST REVISION OF THE STANDARDS AND SPECIFICATIONS FOR THE CITY OF OTTAWA, ONTARIO PROVINCIAL STANDARD DRAWINGS (OPSD) AND SPECIFICATIONS (OPSS), WHERE APPLICABLE. LOCAL UTILITY STANDARDS AND MINISTRY OF TRANSPORTATION STANDARDS WILL APPLY WHERE REQUIRED.
2. THE CONTRACTOR SHALL CONFIRM THE LOCATION OF ALL EXISTING UTILITIES WITHIN THE SITE AND ADJACENT WORK AREAS. THE CONTRACTOR SHALL BE RESPONSIBLE FOR PROTECTING ALL EXISTING UTILITIES TO THE SATISFACTION OF THE AUTHORITY HAVING JURISDICTION. THE CONTRACTOR SHALL BE RESPONSIBLE FOR THE REPAIR OR REPLACEMENT OF ANY SERVICES OR UTILITIES DISTURBED DURING CONSTRUCTION, TO THE SATISFACTION OF THE AUTHORITY HAVING JURISDICTION.
3. ALL DIMENSIONS SHALL BE CHECKED AND VERIFIED IN THE FIELD BY THE CONTRACTOR PRIOR TO THE START OF CONSTRUCTION. ANY DISCREPANCIES SHALL BE REPORTED IMMEDIATELY TO THE ENGINEER. LOST TIME DUE TO FAILURE OF THE CONTRACTOR TO CONFIRM UTILITY LOCATIONS AND NOTIFY ENGINEER OF POSSIBLE CONFLICTS PRIOR TO CONSTRUCTION WILL BE AT THE CONTRACTORS EXPENSE.
4. ANY AREAS BEYOND THE LIMIT OF THE SITE DISTURBED DURING CONSTRUCTION SHALL BE RESTORED TO ORIGINAL CONDITION OR BETTER TO THE SATISFACTION OF THE AUTHORITY HAVING JURISDICTION AT THE CONTRACTOR'S EXPENSE.
5. RELOCATION OF EXISTING SERVICES AND/OR UTILITIES SHALL BE AS SHOWN ON THE DRAWINGS OR DIRECTED BY THE ENGINEER AT THE EXPENSE OF THE DEVELOPER.
6. ALL WORK SHALL BE COMPLETED IN ACCORDANCE WITH THE "OCCUPATIONAL HEALTH AND SAFETY ACT AND REGULATIONS FOR CONSTRUCTION PROJECTS." THE GENERAL CONTRACTOR SHALL BE DEEMED TO BE THE "CONSTRUCTOR" AS DEFINED IN THE ACT.
7. ALL CONSTRUCTION SIGNAGE MUST CONFORM TO THE MINISTRY OF TRANSPORTATION OF ONTARIO MANUAL OF UNIFORM TRAFFIC CONTROL DEVICES PER LATEST AMENDMENT.
8. THE CONTRACTOR IS ADVISED THAT WORKS BY OTHERS MAY BE ONGOING DURING THE PERIOD OF THIS CONTRACT. THE CONTRACTOR SHALL COORDINATE CONSTRUCTION ACTIVITIES TO PREVENT CONFLICTS.
9. ALL DIMENSIONS ARE IN METRES UNLESS SPECIFIED OTHERWISE.
10. THERE WILL BE NO SUBSTITUTION OF MATERIALS UNLESS PRIOR WRITTEN APPROVAL IS RECEIVED FROM THE ENGINEER.
11. ALL CONSTRUCTION SHALL BE CARRIED OUT IN ACCORDANCE WITH THE RECOMMENDATIONS MADE IN GEOTECHNICAL INVESTIGATION (PG5155–1), PREPARED BY PATERSON GROUP AND DATED FEBRUARY, 2020.
12. ALL CONSTRUCTION SHALL BE CARRIED OUT IN ACCORDANCE WITH THE SITE SERVICING AND STORMWATER MANAGEMENT REPORT.
13. ALL SEWERS CONSTRUCTED WITH GRADES LESS THAN 1.0% SHALL BE INSTALLED USING LASER ALIGNMENT AND CHECKED WITH LEVEL INSTRUMENT PRIOR TO BACKFILLING.
14. THE CONTRACTOR IS RESPONSIBLE FOR OBTAINING ALL PERMITS REQUIRED AND TO BEAR THE COST OF THE SAME.
15. THE CONTRACTOR WILL BE RESPONSIBLE FOR ADDITIONAL BEDDING, OR ADDITIONAL STRENGTH PIPE IF THE MAXIMUM TRENCH WIDTH AS SPECIFIED BY OPSD IS EXCEEDED.
16. ALL PIPE / CULVERT SECTION SIZES REFER TO INSIDE DIMENSIONS.
17. SHOULD BURIED ARCHAEOLOGICAL REMAINS BE FOUND ON THE PROPERTY DURING CONSTRUCTION ACTIVITIES, THE HERITAGE OPERATIONS UNIT OF THE ONTARIO MINISTRY OF CULTURE MUST BE NOTIFIED IMMEDIATELY.
18. ALL NECESSARY CLEARING AND GRUBBING SHALL BE COMPLETED BY THE CONTRACTOR. REVIEW WITH CONTRACT ADMINISTRATOR AND THE CITY OF OTTAWA PRIOR TO ANY TREE CUTTING / REMOVAL.
19. DRAWINGS SHALL BE READ IN CONJUNCTION WITH THE ARCHITECTURAL SITE PLAN.
20. THE CONTRACTOR SHALL PROVIDE THE PROJECT ENGINEER ONE SET OF AS CONSTRUCTED SITE SERVICING AND GRADING DRAWINGS.
21. BENCHMARKS: IT IS THE RESPONSIBILITY OF THE CONTRACTOR TO VERIFY THAT THE SITE BENCHMARK(S) HAVE NOT BEEN ALTERED OR DISTURBED AND THAT ITS RELATIVE ELEVATION AND DESCRIPTION AGREES WITH THE INFORMATION DEPICTED ON THIS PLAN.

SITE GRADING NOTES

1. PRIOR TO THE COMMENCEMENT OF THE SITE GRADING WORKS, ALL SILTATION CONTROL DEVICES SHALL BE INSTALLED AND OPERATIONAL PER EROSION CONTROL PLAN.
2. ALL GRANULAR AND PAVEMENT FOR ROADS/PARKING AREAS SHALL BE CONSTRUCTED IN ACCORDANCE WITH GEOTECHNICAL ENGINEER'S RECOMMENDATIONS.
3. ALL TOPSOIL AND ORGANIC MATERIAL SHALL BE STRIPPED WITHIN THE ROAD AND PARKING AREAS ALLOWANCE PRIOR TO THE COMMENCEMENT OF CONSTRUCTION.
4. CONCRETE CURB SHALL BE IN ACCORDANCE WITH CITY OF OTTAWA STD. SC1.1. PROVISION SHALL BE MADE FOR CURB DEPRESSIONS AS INDICATED ON ARCHITECTURAL SITE PLAN. CONCRETE SIDEWALK SHALL BE IN ACCORDANCE WITH CITY OF OTTAWA STD SC1.4. ALL CURBS, CONCRETE ISLANDS, AND SIDEWALKS SHOWN ON THIS DRAWING ARE TO BE PRICED IN THE SITEWORKS PORTION OF THE CONTRACT.
5. PAVEMENT REINSTATEMENT FOR SERVICE AND UTILITY CUTS SHALL BE IN ACCORDANCE WITH THE CITY OF OTTAWA STD. R10 AND OPSD 509.010, AND OPSS 310.
6. GRANULAR "A" SHALL BE PLACED TO A MINIMUM THICKNESS OF 300mm AROUND ALL STRUCTURES WITHIN THE PAVEMENT AREA.
7. SUB–EXCAVATE SOFT AREAS AND FILL WITH GRANULAR "B" COMPACTED IN MAXIMUM 300mm LIFTS.
8. ALL WORK ON THE MUNICIPAL RIGHT OF WAY AND EASEMENTS TO BE INSPECTED BY THE MUNICIPALITY PRIOR TO BACKFILLING.
9. CONTRACTOR TO OBTAIN A ROAD OCCUPANCY PERMIT 48 HOURS PRIOR TO COMMENCING ANY WORK WITHIN THE MUNICIPAL ROAD ALLOWANCE, IF REQUIRED BY THE MUNICIPALITY.
10. ALL PAVEMENT MARKING FEATURES AND SITE SIGNAGE SHALL BE PLACED PER ARCHITECTURAL SITE PLAN. LINE PAINTING AND DIRECTIONAL SYMBOLS SHALL BE APPLIED WITH A MINIMUM OF TWO COATS OF ORGANIC SOLVENT PAINT.
11. REFER TO ARCHITECTURAL SITE PLAN FOR DIMENSIONS AND SITE DETAILS.
12. STEP JOINTS ARE TO BE USED WHERE PROPOSED ASPHALT MEETS EXISTING ASPHALT. ALL JOINTS MUST BE SEALED.
13. SIDEWALKS TO BE 13mm & BEVELED AT 2:1 OR 6mm WITH NO BEVEL REQUIRED BELOW THE FINISHED FLOOR SLAB ELEVATION AT ENTRANCES REQUIRED TO BE BARRIER–FREE, UNLESS OTHERWISE NOTED. ALL IN ACCORDANCE WITH OBC 3.8.1.3. & OTTAWA ACCESSIBILITY DESIGN STANDARDS.
14. WHERE APPLICABLE THE CONTRACTOR IS TO SUBMIT SHOP DRAWINGS FOR RETAINING WALL (INCLUDE RAILINGS IF APPLICABLE) TO THE ENGINEER FOR APPROVAL PRIOR TO CONSTRUCTION. SHOP DRAWINGS MUST BE SITE SPECIFIC, SIGNED AND SEALED BY A LICENSED STRUCTURAL ENGINEER. THE CONTRACTOR WILL ALSO BE REQUIRED TO SUPPLY STRUCTURAL AND GEOTECHNICAL CERTIFICATION OF THE AS–CONSTRUCTED RETAINING WALL TO THE ENGINEER PRIOR TO FINAL ACCEPTANCE.

PAVEMENT STRUCTURE

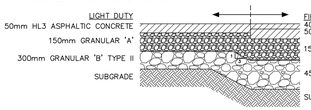

* AS PER GEOTECHNICAL INVESTIGATION (PG5155-1), PREPARED BY PATERSON GROUP AND DATED FEBRUARY, 2020

WATERMAIN NOTES

1. ALL WATERMAIN INSTALLATION SHALL CONFORM TO THE LATEST REVISIONS OF THE CITY OF OTTAWA AND THE ONTARIO PROVNCIAL STANDARD DRAWINGS (OPSD) AND SPECIFICATIONS (OPSS).
2. ALL PVC WATERMAINS SHALL BE AWWA C–900 CLASS 150, DR 18 OR APPROVED EQUIVALENT.
3. WATERMAIN TRENCH AND BEDDING SHALL BE IN ACCORDANCE WITH CITY OF OTTAWA STANDARD W17. UNLESS SPECIFIED OTHERWISE. BEDDING AND COVER MATERIAL SHALL BE SPECIFIED BY THE PROJECT GEOTECHNICAL ENGINEER.
4. ALL PVC WATERMAINS SHALL BE INSTALLED WITH A 10 GAUGE STRANDED COPPER TWU OR RWU TRACER WIRE IN ACCORDANCE WITH CITY OF OTTAWA STD. W.36.
5. CATHODIC PROTECTION IS REQUIRED ON ALL METALLIC FITTINGS PER CITY OF OTTAWA STD. W40 AND W42.
6. VALVE BOXES SHALL BE INSTALLED PER CITY OF OTTAWA STD W24.
7. WATERMAIN IN FILL AREAS TO BE INSTALLED WITH RESTRAINED JOINTS PER CITY OF OTTAWA STD.25.5 AND W25.6.
8. THRUST BLOCKING OF WATERMAINS TO BE INSTALLED PER CITY OF OTTAWA STD. W25.3 AND W25.4.
9. THE CONTRACTOR SHALL PROVIDE ALL TEMPORARY CAPS, PLUGS, BLOW–OFFS, AND NOZZLES REQUIRED FOR TESTING AND DISINFECTION OF THE WATERMAIN.
10. WATERMAIN CROSSING OVER AND BELOW SEWERS SHALL BE IN ACCORDANCE WITH CITY OF OTTAWA STD. W25.2 AND W25, RESPECTIVELY.
11. WATER SERVICES ARE TO BE INSULATED PER CITY STD. W23 WHERE SEPARATION BETWEEN SERVICES AND MAINTENANCE HOLES ARE LESS THAN 2.4m.
12. THE MINIMUM VERTICAL CLEARANCE BETWEEN WATERMAIN AND SEWER / UTILITY IS 0.50m PER MOE GUIDELINES. FOR CROSSING UNDER SEWERS, ADEQUATE STRUCTURAL SUPPORT FOR THE SEWERS IS REQUIRED TO PREVENT EXCESSIVE DEFLECTION OF JOINTS AND SETTLING. THE LENGTH OF WATER PIPE SHALL BE CENTERED AT THE POINT OF CROSSING TO ENSURE THAT THE JOINTS WILL BE EQUIDISTANT AND AS FAR AS POSSIBLE FROM THE SEWER.
13. ALL WATERMAINS SHALL HAVE A MINIMUM COVER OF 2.4m, OTHERWISE THERMAL INSULATION IS REQUIRED AS PER STD DWG W22.
14. GENERAL WATER PLANT TO UTILITY CLEARANCE AS PER STD DWG R20
15. FIRE HYDRANT INSTALLATION AS PER STD DWG W19, ALL BOTTOM OF HYDRANT FLANGE ELEVATIONS TO BE INSTALLED 0.10m ABOVE PROPOSED FINISHED GRADE AT HYDRANT; FIRE HYDRANT LOCATION AS PER STD DWG W18 UNLESS OTHERWISE NOTED.
16. BUILDING SERVICE TO BE CAPPED 1.0m OFF THE FACE OF THE BUILDING UNLESS OTHERWISE NOTED AND MUST BE RESTRAINED A MINIMUM OF 12m BACK FROM STUB.
17. ALL WATERMAINS SHALL BE HYDROSTATICALLY TESTED IN ACCORDANCE WITH THE CITY OF OTTAWA AND ONTARIO GUIDELINES UNLESS OTHERWISE DIRECTED. PROVISIONS FOR FLUSHING WATER OR SWABBING TO BE MADE PRIOR TO TESTING, ETC. MUST BE PROVIDED.
18. ALL WATERMAINS SHALL BE BACTERIOLOGICALLY TESTED IN ACCORDANCE WITH THE CITY OF OTTAWA AND ONTARIO GUIDELINES. ALL CHLORINATED WATER TO BE DISCHARGED AND PRETREATED TO ACCEPTABLE LEVELS PRIOR TO DISCHARGE. ALL DISCHARGED WATER MUST BE CONTROLLED AND TREATED SO AS NOT TO ADVERSELY EFFECT THE ENVIRONMENT. IT IS THE RESPONSIBILITY OF THE CONTRACTOR TO ENSURE THAT ALL MUNICIPAL AND/OR PROVINCIAL REQUIREMENTS ARE FOLLOWED.
19. ALL WATERMAIN STUBS SHALL BE TERMINATED WITH A PLUG AND 50mm BLOW OFF UNLESS OTHERWISE NOTED.

SANITARY AND STORM SEWER NOTES

GENERAL

1. LASER ALIGNMENT CONTROL TO BE UTILIZED ON ALL SEWER INSTALLATIONS.
2. CLAY SEALS TO BE INSTALLED AS PER CITY STANDARD DRAWING S8. THE SEALS SHOULD BE AT LEAST 1.5m LONG (IN THE TRENCH DIRECTION) AND SHOULD EXTEND FROM TRENCH WALL TO TRENCH WALL. THE SEALS SHOULD EXTEND FROM THE FROST LINE AND FULLY PENETRATE THE BEDDING, SUB–BEDDING, AND TRENCH MATERIAL. THE BARRIER SHALL CONSIST OF RELATIVELY DRY AND COMPACTABLE BROWN SILTY CLAY PLACED IN MAXIMUM 225mm LIFTS AND COMPACTED TO A MINIMUM OF 95% SPMDD. THE CLAY SEALS SHOULD BE PLACED AT THE SITE BOUNDARIES AND AT 60m INTERVALS IN THE SERVICE TRENCHES.
3. SERVICES TO BUILDINGS TO BE TERMINATED 1.0m FROM THE OUTSIDE FACE OF BUILDING UNLESS OTHERWISE NOTED.
4. ALL MAINTENANCE STRUCTURE AND CATCH BASIN EXCAVATIONS TO BE BACKFILLED WITH GRANULAR MATERIAL COMPACTED TO 98% STANDARD PROCTOR DENSITY, A MINIMUM OF 300mm AROUND STRUCTURES.
5. "MODULOC" OR APPROVED PRE–CAST MAINTENANCE STRUCTURE AND CATCH BASIN ADJUSTERS TO BE USED IN LIEU OF BRICKING. PARGE ADJUSTING UNITS ON THE OUTSIDE ONLY.
6. SAFETY PLATFORMS SHALL BE PER OPSD 404.02.
7. DROP STRUCTURES SHALL BE IN ACCORDANCE WITH OPSD 1003.01 AND 1003.02, IF APPLICABLE.
8. THE CONTRACTOR IS TO PROVIDE CCTV CAMERA INSPECTIONS OF ALL SEWERS, INCLUDING PICTORIAL REPORT, ONE (1) CD COPY AND TWO (2) VIDEO RECORDINGS IN A FORMAT ACCEPTABLE TO THE ENGINEER. ALL SEWERS ARE TO BE FLUSHED PRIOR TO CAMERA INSPECTION. ASPHALT WEAR COURSE SHALL NOT BE PLACED UNTIL THE VIDEO INSPECTION OF SEWERS AND NECESSARY REPAIRS HAVE BEEN COMPLETED TO THE SATISFACTION OF THE ENGINEER.
9. CONTRACTOR SHALL PERFORM LEAKAGE TESTING, IN THE PRESENCE OF THE CONSULTANT, FOR SANITARY SEWERS IN ACCORDANCE WITH OPSS 410 AND OPSS 407. CONTRACTOR SHALL PERFORM VIDEO INSPECTION OF ALL SEWERS. A COPY OF THE VIDEO AND INSPECTION REPORT SHALL BE SUBMITTED TO THE CONSULTANT FOR REVIEW AND APPROVAL PRIOR TO PLACEMENT OF WEAR COURSE ASPHALT.
10. FROST PROTECTION RECOMMENDATIONS FOR STORM SEWERS WITH LESS THAN 1.5m AND SANITARY SEWERS WITH LESS THAN 1.8m FROM GROUND SURFACE TO PIPE OBVERT TO BE PROVIDED BY GEOTECHNICAL ENGINEER.

SANITARY

11. ALL SANITARY SEWER INSTALLATION SHALL CONFORM TO THE LATEST REVISIONS OF THE CITY OF OTTAWA AND THE ONTARIO PROVINCIAL STANDARD DRAWINGS (OPSD) AND SPECIFICATIONS (OPSS).
12. ALL SANITARY GRAVITY SEWER SHALL BE PVC SDR 35, IPEX "RING–TITE" (OR APPROVED EQUIVALENT) PER CSA STANDARD B182.2 OR LATEST AMENDMENT, UNLESS SPECIFIED OTHERWISE.
13. EXISTING MAINTENANCE STRUCTURES TO BE RE–BENCHED WHERE A NEW CONNECTION IS MADE.
14. SANITARY GRAVITY SEWER TRENCH AND BEDDING SHALL BE PER CITY OF OTTAWA STD. S6 AND S7, CLASS 'B' BEDDING, UNLESS SPECIFIED OTHERWISE.
15. SANITARY MAINTENANCE STRUCTURE FRAME AND COVERS SHALL BE PER CITY OF OTTAWA STD. S24 AND S25.
16. SANITARY MAINTENANCE STRUCTURES SHALL BE BENCHED PER OPSD 701.021.

STORM

17. ALL REINFORCED CONCRETE STORM SEWER PIPE SHALL BE IN ACCORDANCE WITH CSA A257.2, OR LATEST AMENDMENT, ALL NON–REINFORCED CONCRETE STORM SEWER PIPE SHALL BE IN ACCORDANCE WITH CSA A257.1, OR LATEST AMENDMENT. PIPE SHALL BE JOINED WITH STD. RUBBER GASKETS AS PER CSA A257.3, OR LATEST AMENDMENT.
18. ALL STORM SEWER TRENCH AND BEDDING SHALL BE IN ACCORDANCE WITH CITY OF OTTAWA STD. S6 AND S7 CLASS 'B' UNLESS OTHERWISE SPECIFIED. BEDDING AND COVER MATERIAL SHALL BE SPECIFIED BY PROJECT GEOTECHNICAL ENGINEER.
19. ALL PVC STORM SEWERS ARE TO BE SDR 35 APPROVED PER C.S.A. B182.2 OR LATEST AMENDMENT, UNLESS OTHERWISE SPECIFIED.
20. CATCH BASINS SHALL BE IN ACCORDANCE WITH OPSD 705.010.
21. CATCH BASIN LEADS SHALL BE 200MM DIA. AT 1% SLOPE (MIN) UNLESS SPECIFIED OTHERWISE.
22. ALL CATCH BASINS SHALL HAVE 600MM SUMPS, UNLESS SPECIFIED OTHERWISE.
23. ALL CATCH BASIN LEAD INVERTS TO BE 1.5m BELOW FINISHED GRADE UNLESS SPECIFIED OTHERWISE.
24. THE STORM SEWER CLASSES HAVE BEEN DESIGNED BASED ON BEDDING CONDITIONS SPECIFIED ABOVE. WHERE THE SPECIFIED TRENCH WIDTH IS EXCEEDED, THE CONTRACTOR IS REQUIRED TO PROVIDE AND SHALL BE RESPONSIBLE FOR EXTRA TEMPORARY AND/OR PERMANENT REPAIRS MADE NECESSARY BY THE WIDENED TRENCH.
25. PERFORATED SUBDRAIN FOR ROAD AND PARKING LOT CATCH BASIN SHALL BE INSTALLED PER CITY STD R1 AND GEOTECHNICAL RECOMMENDATIONS UNLESS OTHERWISE NOTED.
26. PERFORATED SUBDRAIN FOR REAR YARD AND LANDSCAPING APPLICATIONS SHALL BE INSTALLED PER CITY STD S29, S30, AND S31, WHERE APPLICABLE.
27. RIP–RAP TREATMENT FOR SEWER AND CULVERT OUTLETS PER OPSD 810.010.
28. ALL STORM SEWERS / CULVERTS TO BE INSTALLED WITH FROST TREATMENT PER OPSD 803.031 WHERE APPLICABLE.
29. STORM MAINTENANCE STRUCTURE FRAME AND COVERS SHALL BE PER CITY OF OTTAWA STD S25 AND S24.1, UNLESS OTHERWISE NOTED.
30. CATCH BASIN FRAME AND COVER SHALL BE PER OPSD 400.02 AND CITY STD S19.1, UNLESS OTHERWISE NOTED.

EROSION AND SEDIMENT CONTROL NOTES

GENERAL

THE CONTRACTOR SHALL IMPLEMENT BEST MANAGEMENT PRACTICES, TO PROVIDE FOR PROTECTION OF THE AREA DRAINAGE SYSTEM AND THE RECEIVING WATERCOURSE, DURING CONSTRUCTION ACTIVITIES. THE CONTRACTOR ACKNOWLEDGES THAT FAILURE TO IMPLEMENT APPROPRIATE EROSION AND SEDIMENT CONTROL MEASURES MAY BE SUBJECT TO PENALTIES IMPOSED BY ANY APPLICABLE REGULATORY AGENCY.

THE CONTRACTOR ACKNOWLEDGES THAT SURFACE EROSION AND SEDIMENT RUNOFF RESULTING FROM THEIR CONSTRUCTION OPERATIONS HAS POTENTIAL TO CAUSE A DETRIMENTAL IMPACT TO ANY DOWNSTREAM WATERCOURSE OR SEWER, AND THAT ALL CONSTRUCTION OPERATIONS THAT MAY IMPACT UPON WATER QUALITY SHALL BE CARRIED OUT IN A MANNER THAT STRICTLY MEETS THE REQUIREMENTS OF ALL APPLICABLE LEGISLATION AND REGULATIONS.

AS SUCH, THE CONTRACTOR SHALL BE RESPONSIBLE FOR CARRYING OUT THEIR OPERATIONS, AND SUPPLYING AND INSTALLING ANY APPROPRIATE CONTROL MEASURES, SO AS TO PREVENT SEDIMENT LADEN RUNOFF FROM ENTERING ANY SEWER OR WATERCOURSE WITHIN OR DOWNSTREAM OF THE WORKING AREA.

THE CONTRACTOR ACKNOWLEDGES THAT NO ONE MEASURE IS LIKELY TO BE 100% EFFECTIVE FOR EROSION PROTECTION AND CONTROLLING SEDIMENT RUNOFF AND DISCHARGES FROM THE SITE. THEREFORE, WHERE NECESSARY THE CONTRACTOR SHALL IMPLEMENT ADDITIONAL MEASURES ARRANGED IN SUCH A MANNER AS TO MITIGATE SEDIMENT RELEASE FROM THE CONSTRUCTION OPERATIONS AND ACHIEVE SPECIFIC MAXIMUM PERMITTED CRITERIA WHERE APPLICABLE. SUGGESTED ON–SITE MEASURES MAY INCLUDE, BUT SHALL NOT BE LIMITED TO, THE FOLLOWING METHODS: SEDIMENT PONDS, FILTER BAGS, PUMP FILTERS, SETTLING TANKS, SILT FENCES, STRAW BALES, FILTER CLOTHS, CATCH BASIN FILTERS, CHECK DAMS AND/OR BERMS, OR OTHER RECOGNIZED TECHNOLOGIES AND METHODS AVAILABLE AT THE TIME OF CONSTRUCTION. SPECIFIC MEASURES SHALL BE INSTALLED IN ACCORDANCE WITH THE REQUIREMENTS OF OPSS 577 WHERE APPROPRIATE, OR IN ACCORDANCE WITH MANUFACTURER'S RECOMMENDATIONS.

WHERE, IN THE OPINION OF THE CONTRACT ADMINISTRATOR OR REGULATORY AGENCY, THE INSTALLED CONTROL MEASURES FAIL TO PERFORM ADEQUATELY, THE CONTRACTOR SHALL SUPPLY AND INSTALL ADDITIONAL OR ALTERNATIVE MEASURES AS DIRECTED BY THE CONTRACT ADMINISTRATOR OR REGULATORY AGENCY. AS SUCH, THE CONTRACTOR SHALL HAVE ADDITIONAL CONTROL MATERIALS ON SITE AT ALL TIMES WHICH ARE EASILY ACCESSIBLE AND MAY BE IMPLEMENTED BY HIM AT A MOMENT'S NOTICE.

PRIOR TO COMMENCING WORK, THE CONTRACTOR SHALL SUBMIT TO THE CONTRACT ADMINISTRATOR SIX COPIES OF A DETAILED EROSION AND SEDIMENT CONTROL PLAN (ESCP). THE ESCP WILL CONSIST OF A WRITTEN DESCRIPTION AND DETAILED DRAWINGS INDICATING THE ON–SITE ACTIVITIES AND MEASURES TO BE USED TO CONTROL EROSION AND SEDIMENT MOVEMENT FOR EACH STEP OF THE WORK.

CONTRACTOR'S RESPONSIBILITIES

THE CONTRACTOR SHALL ENSURE THAT ALL WORKERS, INCLUDING SUB–CONTRACTORS, IN THE WORKING AREA ARE AWARE OF THE IMPORTANCE OF THE EROSION AND SEDIMENT CONTROL MEASURES AND INFORMED OF THE CONSEQUENCES OF THE FAILURE TO COMPLY WITH THE REQUIREMENTS OF ALL REGULATORY AGENCIES.

THE CONTRACTOR SHALL PERIODICALLY, AND WHEN REQUESTED BY THE CONTRACT ADMINISTRATOR, CLEAN OUT ACCUMULATED SEDIMENT DEPOSITS AS REQUIRED AT THE SEDIMENT CONTROL DEVICES, INCLUDING THOSE DEPOSITS THAT MAY ORIGINATE FROM OUTSIDE THE CONSTRUCTION AREA. ACCUMULATED SEDIMENT SHALL BE REMOVED IN SUCH A MANNER THAT PREVENTS THE DEPOSITION OF THIS MATERIAL INTO ANY SEWER OR WATERCOURSE AND AVOIDS DAMAGE TO THE CONTROL MEASURE. THE SEDIMENT SHALL BE REMOVED FROM THE SITE AT THE CONTRACTOR'S EXPENSE AND MANAGED IN COMPLIANCE WITH THE REQUIREMENTS FOR EXCESS EARTH MATERIAL, AS SPECIFIED ELSEWHERE IN THE CONTRACT.

THE CONTRACTOR SHALL IMMEDIATELY REPORT TO THE CONTRACT ADMINISTRATOR ANY ACCIDENTAL DISCHARGES OF SEDIMENT MATERIAL INTO EITHER THE WATERCOURSE OR THE STORM SEWER SYSTEM. FAILURE TO REPORT WILL BE CONSTITUTE A BREACH OF THIS SPECIFICATION AND THE CONTRACTOR MAY ALSO BE SUBJECT TO THE PENALTIES IMPOSED BY ANY APPLICABLE REGULATORY AGENCY. APPROPRIATE RESPONSE MEASURES, INCLUDING ANY REPAIRS TO EXISTING CONTROL MEASURES OR THE IMPLEMENTATION OF ADDITIONAL CONTROL MEASURES, SHALL BE CARRIED OUT BY THE CONTRACTOR WITHOUT DELAY.

THE SEDIMENT CONTROL MEASURES SHALL ONLY BE REMOVED WHEN, IN THE OPINION OF THE CONTRACT ADMINISTRATOR, THE MEASURE OR MEASURES, IS NO LONGER REQUIRED. NO CONTROL MEASURE MAY BE PERMANENTLY REMOVED WITHOUT PRIOR AUTHORIZATION FROM THE CONTRACT ADMINISTRATOR. ALL SEDIMENT AND EROSION CONTROL MEASURES SHALL BE REMOVED IN A MANNER THAT AVOIDS THE ENTRY OF ANY EQUIPMENT, OTHER THAN HAND–HELD EQUIPMENT, INTO ANY WATERCOURSE, AND PREVENTS THE RELEASE OF ANY SEDIMENT OR DEBRIS INTO ANY SEWER OR WATERCOURSE WITHIN OR DOWNSTREAM OF THE WORKING AREA. ALL ACCUMULATED SEDIMENT SHALL BE REMOVED FROM THE WORKING AREA AT THE CONTRACTOR'S EXPENSE AND MANAGED IN COMPLIANCE WITH THE REQUIREMENTS FOR EXCESS EARTH MATERIAL.

WHERE, IN THE OPINION OF EITHER THE CONTRACT ADMINISTRATOR OR A REGULATORY AGENCY, ANY OF THE TERMS SPECIFIED HEREIN HAVE NOT BEEN COMPLIED WITH OR PERFORMED IN A SUITABLE MANNER, OR AT ALL, THE CONTRACT ADMINISTRATOR OR REGULATORY AGENCY HAS THE RIGHT TO IMMEDIATELY WITHDRAW ITS PERMISSION TO CONTINUE THE WORK BUT MAY RENEW ITS PERMISSION UPON BEING SATISFIED THAT THE DEFAULTS OR DEFICIENCIES IN THE PERFORMANCE OF THIS SPECIFICATION BY THE CONTRACTOR HAVE BEEN REMEDIED.

SPILL CONTROL NOTES

1. ALL CONSTRUCTION EQUIPMENT SHALL BE RE–FUELED, MAINTAINED, AND STORED NO LESS THAN 30 METRES FROM WATERCOURSES, STREAMS, CREEKS, WOODLOTS, OR ANY ENVIRONMENTALLY–SENSITIVE AREAS, OR AS OTHERWISE DIRECTED.
2. THE CONTRACTOR MUST IMPLEMENT ALL NECESSARY MEASURES IN ORDER TO PREVENT LEAKS, DISCHARGES OR SPILLS OF POLLUTANTS, DELETERIOUS MATERIALS, OR OTHER SUCH MATERIALS OR SUBSTANCES WHICH WOULD OR COULD CAUSE AN ADVERSE IMPACT TO THE NATURAL ENVIRONMENT.
3. IN THE EVENT OF A LEAK, DISCHARGE OR SPILL OF A POLLUTANT, DELETERIOUS MATERIAL OR OTHER SUCH MATERIAL OR SUBSTANCE WITH WOULD OR COULD CAUSE AN ADVERSE IMPACT TO THE NATURAL ENVIRONMENT, THE CONTRACTOR SHALL:
   - 3.1. IMMEDIATELY NOTIFY THE APPROPRIATE FEDERAL, PROVINCIAL, AND LOCAL GOVERNMENT MINISTRIES, DEPARTMENTS, AGENCIES, AND AUTHORITIES OF THE INCIDENT IN ACCORDANCE WITH ALL CURRENT LAWS, LEGISLATION, ACTS, BY–LAWS, PERMITS, APPROVALS, ETC.
   - 3.2. TAKE IMMEDIATE MEASURES TO CONTAIN THE MATERIAL OR SUBSTANCE, AND TO TAKE SUCH MEASURES TO MITIGATE AGAINST ADVERSE IMPACTS TO THE NATURAL ENVIRONMENT.
   - 3.3. RESTORE THE AFFECTED AREA TO THE ORIGINAL CONDITION OR BETTER TO THE SATISFACTION OF THE AUTHORITIES HAVING JURISDICTION.

MUD MAT NOTES

1. THE GRANULAR MATERIAL WILL REQUIRE PERIODIC REPLACEMENT AS IT BECOMES CONTAMINATED BY VEHICLE TRAFFIC.
2. SEDIMENT SHALL BE CLEANED FROM PUBLIC ROADS AT THE END OF EACH DAY.
3. SEDIMENT SHALL BE REMOVED FROM PUBLIC ROADS BY SHOVELING OR SWEEPING AND DISPOSED OF PROPERLY IN A CONTROLLED SEDIMENT DISPOSAL AREA.

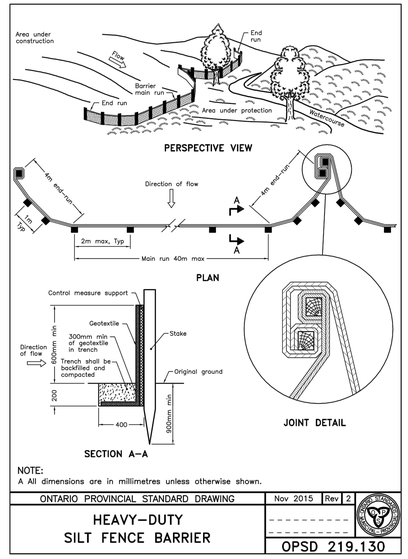

NOTE:
A All dimensions are in millimetres unless otherwise shown.

ONTARIO PROVINCIAL STANDARD DRAWING	Nov 2015	Rev 2
HEAVY–DUTY SILT FENCE BARRIER	OPSD 219.130	

INLET CONTROL DEVICE (ICD) DETAIL
PLASTIC "PLUG" STYLE

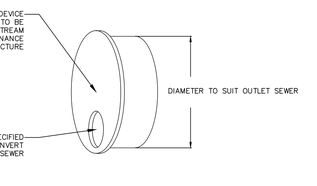

NOT TO SCALE

*LOCATED AT STM 204

STORM OUTLET SERVICING

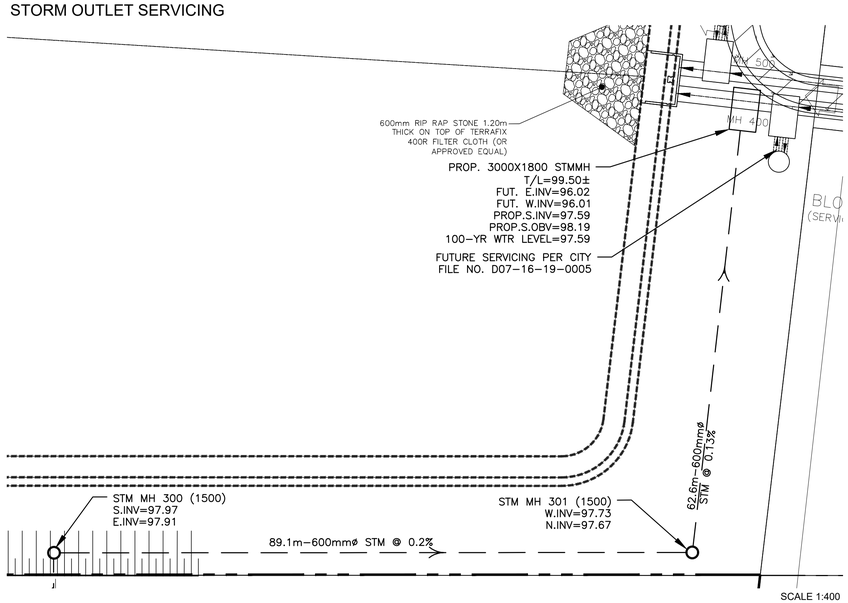

SCALE 1:400

KEY PLAN

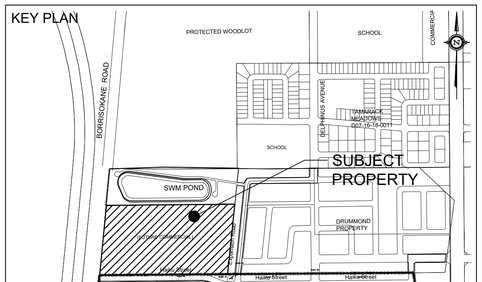

STORM DRAIN INLET PROTECTION

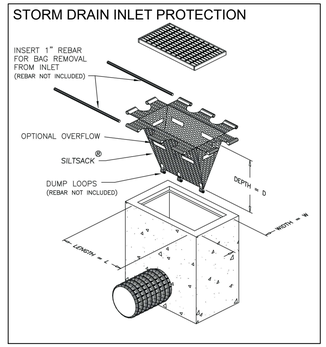

NOT FOR CONSTRUCTION

TOPOGRAPHIC INFORMATION
TOPOGRAPHIC INFORMATION PROVIDED BY J.D. BARNES LIMITED
PROJ. NO. 18–10–145–00
DATED J