LEGEND:

- EXISTING PROPERTY LINE TO REMAIN
- PROPOSED EASEMENT
- PROPOSED TERRACING (3:1 MIN.)
- PROPSED DOOR ENTRANCE/EXIT
- ×50.00 PROPOSED ELEVATION
- ×50.00HP PROPOSED HIGH POINT ELEVATION
- ×50.00SW PROPOSED SWALE ELEVATION
- ×50.00EX MATCH INTO EXISTING ELEVATION
- 75.19 EXISTING ELEVATION
- PROPOSED OVERLAND MAJOR FLOW ROUTE
- PROPOSED SILT FENCE AS PER OPSD 219.110
- PROPOSED 100mmØ PERFORATED SUBDRAIN
- STM PROPOSED STORM SEWER
- SAN PROPOSED SANITARY SEWER
- WTR PROPOSED WATERMAIN
- SAN EXISTING SANITARY SEWER
- WTR EXISTING WATERMAIN
- PROPOSED CATCHBASIN-MANHOLE/CATCHBASIN
- PROPOSED CURB STOP
- PROPOSED PIPE INSULATION
- PROPOSED 100 YEAR HIGH WATER LEVEL
- STORM WATERSHED EXTENT
- WS-XX WATERSHED NAME
- 0.XX RUNOFF COEFFICIENT
- 0.XX AREA (ha) AREA IN HECTARES
- PROPOSSED GRASS AREA
- PROPOSED CONCRETE FEATURES/SLAB
- PROPOSED HEAVY DUTY ASPHALT
- PROPOSED LIGHT DUTY ASPHALT
- PROPOSED GRAVEL AREA
- PROPOSED RIP RAP AS PER OPSD 810.010
- M PROPOSED WATER METER
- PROPOSED ACCESS GATE
- PROPOSED GROWING FIELD

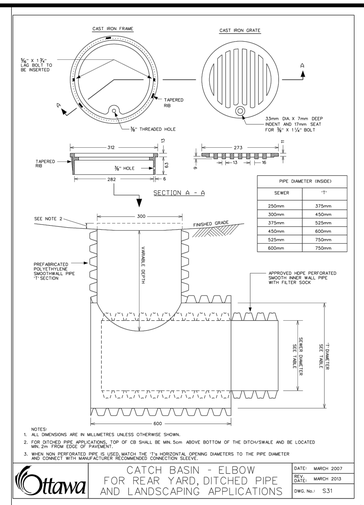

PIPE DIAMETER (INSIDE)	
SEWER	'T'
250mm	375mm
300mm	450mm
375mm	525mm
450mm	600mm
525mm	750mm
600mm	750mm

Ottawa — CATCH BASIN - ELBOW FOR REAR YARD, DITCHED PIPE AND LANDSCAPING APPLICATIONS

DATE: MARCH 2007 | REV. DATE: MARCH 2013 | DWG. No.: S.31

PIPE DIAMETER (INSIDE)	
SEWER	'T'
250mm	375mm
300mm	450mm
375mm	525mm
450mm	600mm
525mm	750mm
600mm	750mm

Ottawa — CATCH BASIN - 'T' FOR REAR YARD, DITCHED PIPE AND LANDSCAPING APPLICATIONS

DATE: MARCH 2007 | REV. DATE: MARCH 2013 | DWG. No.: S.30

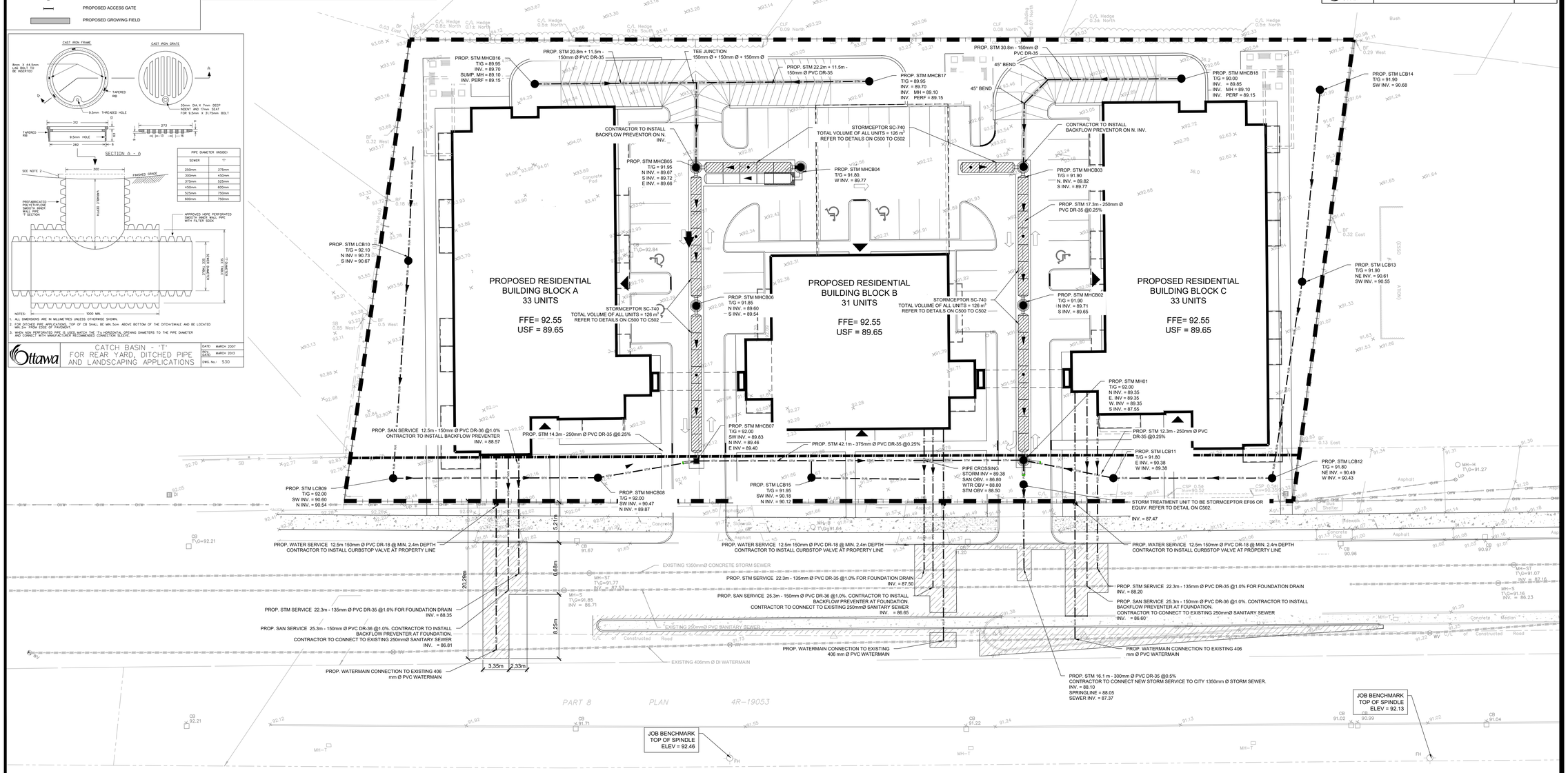

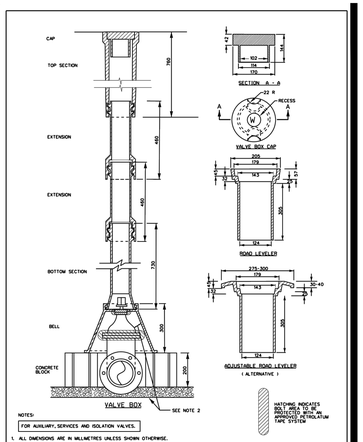

Ottawa — VALVE BOX ASSEMBLY

DATE: MAY 2001 | REV. DATE: MARCH 2016 | DWG. No.: W24

COPYRIGHT RESERVED
THE CONTRACTOR SHALL VERIFY AND BE RESPONSIBLE OF ALL DIMENSIONS. DO NOT SCALE THE DRAWING - ANY ERRORS OR OMISSIONS SHALL BE REPORTED TO BLANCHARD LETENDRE ENGINEERING LTD. WITHOUT DELAY. THE COPYRIGHTS TO ALL DESIGNS AND DRAWINGS ARE THE PROPERTY OF BLANCHARD LETENDRE ENGINEERING LTD. REPRODUCTION OR USE FOR ANY PURPOSE OTHER THAN THAT AUTHORIZED BY BLANCHARD LETENDRE ENGINEERING LTD. IS STRICTLY PROHIBITED.

ENGINEERING STAMP

LICENSED PROFESSIONAL ENGINEER — G. L. GRUNET — 100161036 — 14/10/2020 — PROVINCE OF ONTARIO

NO.	REVISION	DATE (DD/MM/YYYY)
#8		
#7		
#6		
#5		
#4		
#3		
#2	REVISED FOR COMMENTS	14 / 10 / 2020
#1	ISSUED FOR SPA	30 / 09 / 2020

BLANCHARD LETENDRE ENGINEERING
767, Notre Dame, Local 42, Embrun, Ontario, K0A 1W1
(613) 693-0700 blengineering.ca

CLIENT:
OLIGO DEVELOPMENT
996-B ST. AUGUSTIN RD.
EMBRUN, ON

PROJECT:
NEW RESIDENTIAL DEVELOPMENT
3817 - 3843 INNES RD,
ORLEANS, ON

DRAWING:
SITE SERVICING PLAN

PAPER FORMAT:	24x36
DRAWN BY:	BF + GB
CHECKED BY:	GB
DATE:	08-2020
SCALE:	1:250
PROJECT NUMBER:	20-184

PAGE: C300