LEGEND:

- EXISTING PROPERTY LINE TO REMAIN
- PROPOSED DOOR ENTRANCE/EXIT
- ×50.00 PROPOSED ELEVATION
- ×50.00HP PROPOSED HIGH POINT ELEVATION
- ×50.00SD PROPOSED SIDEWALK ELEVATION
- ×50.00SW PROPOSED SWALE ELEVATION
- ×50.00EX MATCH INTO EXISTING ELEVATION
- ×50.00 EXISTING ELEVATION
- PROPOSED OVERLAND MAJOR FLOW ROUTE
- PROPOSED SILT FENCE AS PER OPSD 219.110
- SUB — PROPOSED 250mmØ PERFORATED SUBDRAIN
- PROPOSED SWALE
- STM — PROPOSED STORM SEWER
- SAN — PROPOSED SANITARY SEWER
- WTR — PROPOSED WATERMAIN
- SAN — EXISTING SANITARY SEWER
- WTR — EXISTING WATERMAIN
- PROPOSED CATCHBASIN-MANHOLE/CATCHBASIN
- PROPOSED CURB STOP
- PROPOSED PIPE INSULATION AS PER W22
- PROPOSED 100 YEAR HIGH WATER LEVEL
- STORM WATERSHED EXTENT
- WS-XX — WATERSHED NAME
- CONTROLLED — RUNOFF COEFFICIENT
- AREA — AREA IN HECTARES
- PROPOSSED GRASS AREA
- PROPOSED CONCRETE FEATURES/SLAB
- PROPOSED HEAVY DUTY ASPHALT
- PROPOSED LIGHT DUTY ASPHALT
- PROPOSED GRAVEL AREA
- PROPOSED RIP RAP AS PER OPSD 810.010
- PROPOSED WATER METER
- PROPOSED SIEMIESE CONNECTION
- PROPOSED GROWING FIELD

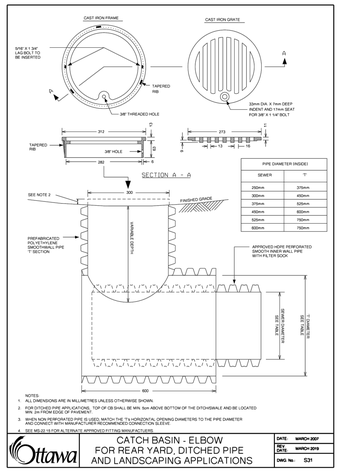

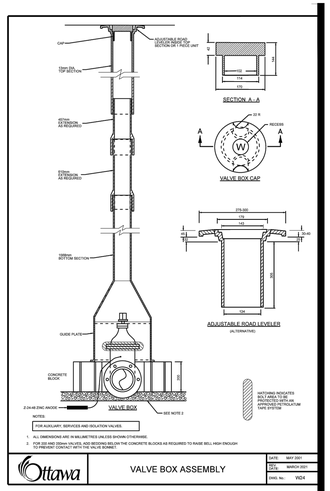

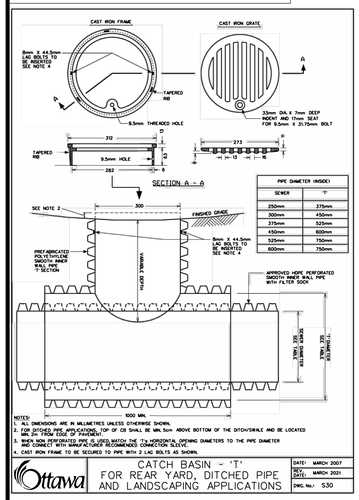

PIPE DIAMETER (INSIDE)	
SEWER	'T'
250mm	375mm
300mm	450mm
375mm	525mm
450mm	600mm
525mm	750mm
600mm	750mm

MANHOLE TABLE

STORM		
MH Number	Size	Cover
MH01	1200mm	S23
MHCB02	1200mm	S28.1
MHCB03	1200mm	S28.1
MHCB03A	1200mm	S28.1
MHCB04	1200mm	S28.1
MHCB05	1200mm	S28.1
LCB06 TO LCB15	S30 AND S31	
SANITARY		
MH Number	Size	Cover
MHA	1200mm	S24
MHB	1200mm	S24

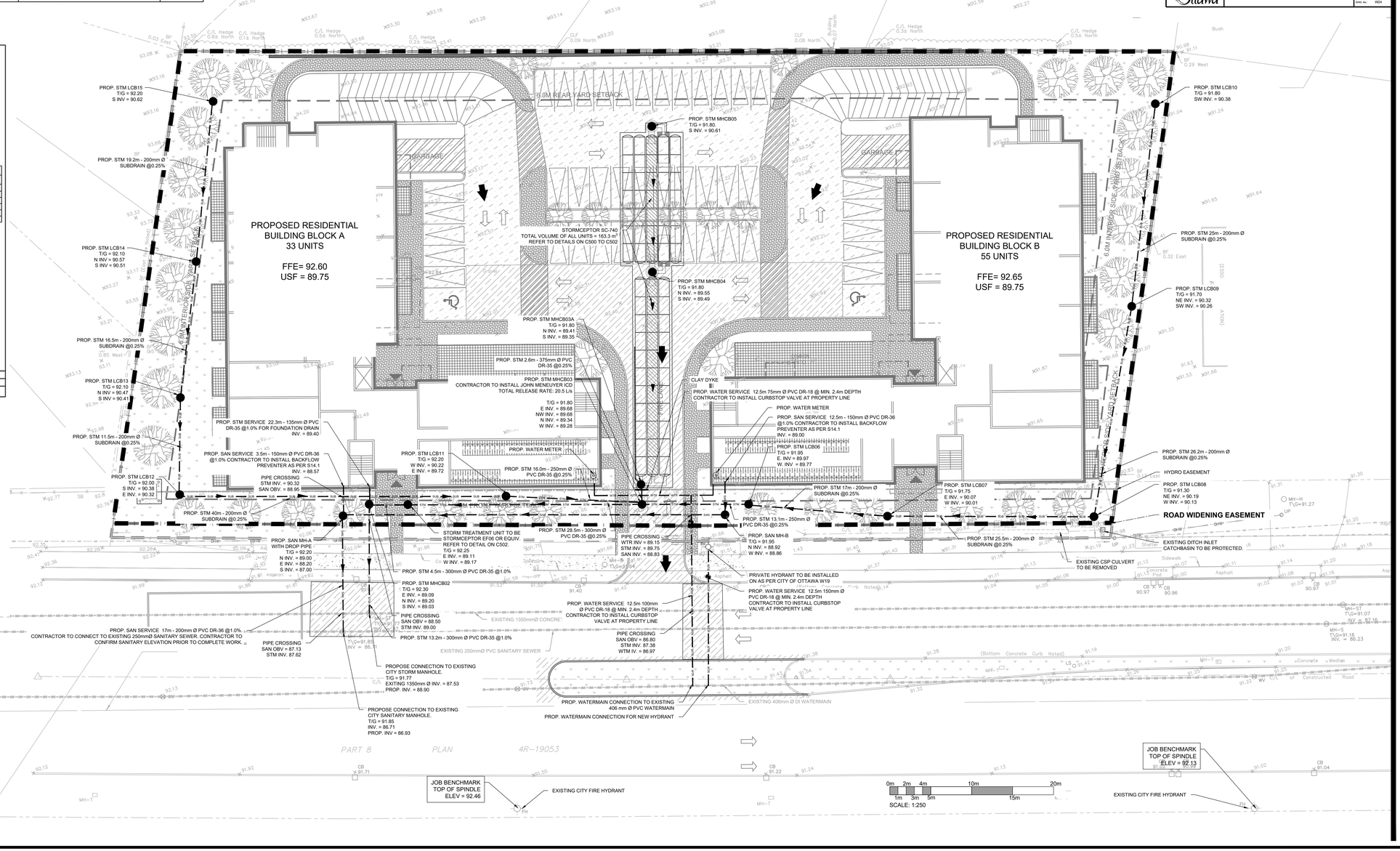

COPYRIGHT RESERVED
THE CONTRACTOR SHALL VERIFY AND BE RESPONSIBLE OF ALL DIMENSIONS. DO NOT SCALE THE DRAWING - ANY ERRORS OR OMISSIONS SHALL BE REPORTED TO BLANCHARD LETENDRE ENGINEERING LTD. WITHOUT DELAY. THE COPYRIGHTS TO ALL DESIGNS AND DRAWINGS ARE THE PROPERTY OF BLANCHARD LETENDRE ENGINEERING LTD. REPRODUCTION OR USE FOR ANY PURPOSE OTHER THAN THAT AUTHORIZED BY BLANCHARD LETENDRE ENGINEERING LTD. IS STRICTLY PROHIBITED.

ENGINEERING STAMP

LICENSED PROFESSIONAL ENGINEER G. L. BRUNET 100191036 03/05/2022 PROVINCE OF ONTARIO

NO.	REVISION	DATE (DD/MM/YYYY)
#8		
#7		
#6		
#5		
#4	ISSUED FOR CITY COMMENTS	03 / 05 / 2022
#3	ISSUED FOR CITY COMMENTS	05 / 04 / 2021
#2	ISSUED FOR CITY COMMENTS	17 / 12 / 2020
#1	ISSUED FOR SPA	14 / 10 / 2020

BLANCHARD LETENDRE ENGINEERING
767, Notre Dame, Local 42, Embrun, Ontario, K0A 1W1
(613) 693-0700 blengineering.ca

CLIENT:
OLIGO DEVELOPMENT
996-B ST. AUGUSTIN RD.
EMBRUN, ON

PROJECT:
NEW RESIDENTIAL DEVELOPMENT
3817 - 3843 INNES RD,
ORLEANS, ON

DRAWING:
SITE SERVICING PLAN

PAPER FORMAT:	24x36
DRAWN BY:	BF + GB
CHECKED BY:	GB
DATE:	04-2022
SCALE:	1:250
PROJECT NUMBER:	20-184

PAGE: C300

DRAWING NUMBER : 18285

D07-12-20-0164