NYLOPLAST DRAIN BASIN

NTS

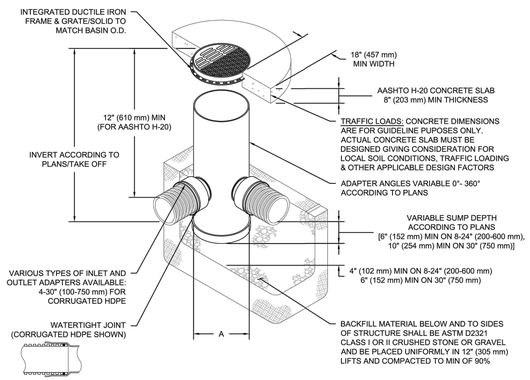

NOTES

1. 8-30" (200-750 mm) GRATES/SOLID COVERS SHALL BE DUCTILE IRON PER ASTM A536 GRADE 70-50-05
2. 12-30" (300-750 mm) FRAMES SHALL BE DUCTILE IRON PER ASTM A536 GRADE 70-50-05
3. DRAIN BASIN TO BE CUSTOM MANUFACTURED ACCORDING TO PLAN DETAILS
4. DRAINAGE CONNECTION STUB JOINT TIGHTNESS SHALL CONFORM TO ASTM D3212 FOR CORRUGATED HDPE (ADS & HANCOR DUAL WALL) & SDR 35 PVC
5. FOR COMPLETE DESIGN AND PRODUCT INFORMATION: **WWW.NYLOPLAST-US.COM**
6. TO ORDER CALL: **800-821-6710**

A	PART #	GRATE/SOLID COVER OPTIONS		
8" (200 mm)	2808AG	PEDESTRIAN LIGHT DUTY	STANDARD LIGHT DUTY	SOLID LIGHT DUTY
10" (250 mm)	2810AG	PEDESTRIAN LIGHT DUTY	STANDARD LIGHT DUTY	SOLID LIGHT DUTY
12" (300 mm)	2812AG	PEDESTRIAN AASHTO H-10	STANDARD AASHTO H-20	SOLID AASHTO H-20
15" (375 mm)	2815AG	PEDESTRIAN AASHTO H-10	STANDARD AASHTO H-20	SOLID AASHTO H-20
18" (450 mm)	2818AG	PEDESTRIAN AASHTO H-10	STANDARD AASHTO H-20	SOLID AASHTO H-20
24" (600 mm)	2824AG	PEDESTRIAN AASHTO H-10	STANDARD AASHTO H-20	SOLID AASHTO H-20
30" (750 mm)	2830AG	PEDESTRIAN AASHTO H-20	STANDARD AASHTO H-20	SOLID AASHTO H-20

3817 INNES ROAD
OTTAWA, CANADA
DATE: DRAWN: LHJ
PROJECT #: CHECKED: N/A

DATE	DRW	CHK	DESCRIPTION

Nyloplast®
770-963-3443 | WWW.NYLOPLAST-US.COM

4640 TRUEMAN BLVD
HILLIARD, OH 43026
1-800-733-7473

ADS

THIS DRAWING HAS BEEN PREPARED BASED ON INFORMATION PROVIDED TO ADS UNDER THE DIRECTION OF THE SITE DESIGN ENGINEER OR OTHER PROJECT REPRESENTATIVE. THE SITE DESIGN ENGINEER SHALL REVIEW THIS DRAWING PRIOR TO CONSTRUCTION. IT IS THE ULTIMATE RESPONSIBILITY OF THE SITE DESIGN ENGINEER TO ENSURE THAT THE PRODUCT(S) DEPICTED AND ALL ASSOCIATED DETAILS MEET ALL APPLICABLE LAWS, REGULATIONS, AND PROJECT REQUIREMENTS.

SHEET
6 OF 6

COPYRIGHT RESERVED
THE CONTRACTOR SHALL VERIFY AND BE RESPONSIBLE OF ALL DIMENSIONS. DO NOT SCALE THE DRAWING - ANY ERRORS OR OMISSIONS SHALL BE REPORTED TO BLANCHARD LETENDRE ENGINEERING LTD. WITHOUT DELAY. THE COPYRIGHTS TO ALL DESIGNS AND DRAWINGS ARE THE PROPERTY OF BLANCHARD LETENDRE ENGINEERING LTD. REPRODUCTION OR USE FOR ANY PURPOSE OTHER THAN THAT AUTHORIZED BY BLANCHARD LETENDRE ENGINEERING LTD. IS STRICTLY PROHIBITED.

DRAWING NOT TO BE USED FOR CONSTRUCTION

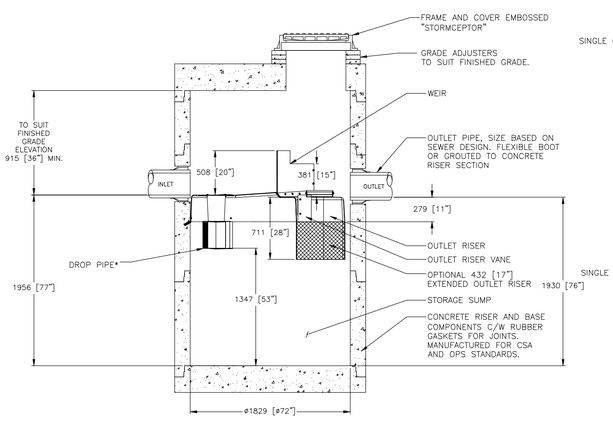

SECTION VIEW

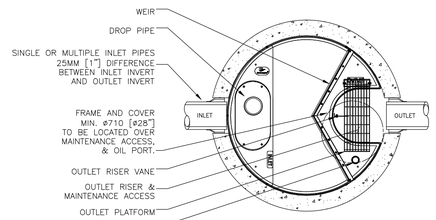

PLAN VIEW (STANDARD)

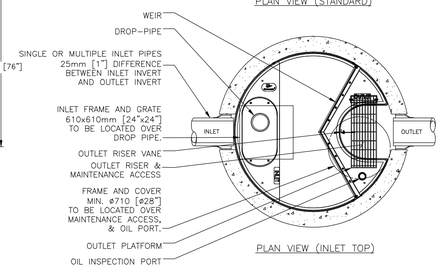

PLAN VIEW (INLET TOP)

GENERAL NOTES:

* MAXIMUM SURFACE LOADING RATE (SLR) INTO LOWER CHAMBER THROUGH DROP PIPE IS 1135 L/min/m2 (27.9 gpm/ft2) FOR STORMCEPTOR EF6 AND 535 L/min/m2 (13.1 gpm/ft2) FOR STORMCEPTOR EFO6 (OIL CAPTURE CONFIGURATION).

1. ALL DIMENSIONS INDICATED ARE IN MILLIMETERS (INCHES) UNLESS OTHERWISE SPECIFIED.
2. STORMCEPTOR STRUCTURE INLET AND OUTLET PIPE SIZE AND ORIENTATION SHOWN FOR INFORMATIONAL PURPOSES ONLY.
3. UNLESS OTHERWISE NOTED, BYPASS INFRASTRUCTURE, SUCH AS ALL UPSTREAM DIVERSION STRUCTURES, CONNECTING STRUCTURES, OR PIPE CONDUITS CONNECTING TO COMPLETE THE STORMCEPTOR SYSTEM SHALL BE PROVIDED AND ADDRESSED SEPARATELY.
4. DRAWING FOR INFORMATION PURPOSES ONLY. REFER TO ENGINEER'S SITE/UTILITY PLAN FOR STRUCTURE ORIENTATION.
5. NO PRODUCT SUBSTITUTIONS SHALL BE ACCEPTED UNLESS SUBMITTED 10 DAYS PRIOR TO PROJECT BID DATE, OR AS DIRECTED BY THE ENGINEER OF RECORD.

FOR SITE SPECIFIC DRAWINGS PLEASE CONTACT YOUR LOCAL STORMCEPTOR REPRESENTATIVE. SITE SPECIFIC DRAWINGS ARE BASED ON THE BEST AVAILABLE INFORMATION AT THE TIME. SOME FIELD REVISIONS TO THE SYSTEM LOCATION OR CONNECTION PIPING MAY BE NECESSARY BASED ON AVAILABLE SPACE OR SITE CONFIGURATION REVISIONS. ELEVATIONS SHOULD BE MAINTAINED EXCEPT WHERE NOTED ON BYPASS STRUCTURE (IF REQUIRED).

INSTALLATION NOTES

A. ANY SUB-BASE, BACKFILL DEPTH, AND/OR ANTI-FLOTATION PROVISIONS ARE SITE-SPECIFIC DESIGN CONSIDERATIONS AND SHALL BE SPECIFIED BY ENGINEER OF RECORD.
B. CONTRACTOR TO PROVIDE EQUIPMENT WITH SUFFICIENT LIFTING AND REACH CAPACITY TO LIFT AND SET THE STRUCTURE (LIFTING CLUTCHES PROVIDED)
C. CONTRACTOR WILL INSTALL AND LEVEL THE STRUCTURE, SEALING THE JOINTS, LINE ENTRY AND EXIT POINTS (NON-SHRINK GROUT WITH APPROVED WATERSTOP OR FLEXIBLE BOOT).
D. CONTRACTOR TO TAKE APPROPRIATE MEASURES TO PROTECT THE DEVICE FROM CONSTRUCTION-RELATED EROSION RUNOFF.
E. DEVICE ACTIVATION, BY CONTRACTOR, SHALL OCCUR ONLY AFTER SITE HAS BEEN STABILIZED AND THE STORMCEPTOR UNIT IS CLEAN AND FREE OF DEBRIS.

STANDARD DETAIL
NOT FOR CONSTRUCTION

SITE SPECIFIC DATA REQUIREMENTS

STORMCEPTOR MODEL	EFO6				
STRUCTURE ID					*
HYDROCARBON STORAGE REQ'D (L)					*
WATER QUALITY FLOW RATE (L/s)					*
PEAK FLOW RATE (L/s)					*
RETURN PERIOD OF PEAK FLOW (yrs)					*
DRAINAGE AREA (HA)					*
DRAINAGE AREA IMPERVIOUSNESS (%)					*
PIPE DATA:	I.E.	MAT'L	DIA	SLOPE %	HGL
INLET #1	*	*	*	*	*
INLET #2	*	*	*	*	*
OUTLET	*	*	*	*	*

* PER ENGINEER OF RECORD

MARK	DATE	REVISION DESCRIPTION	BY
#10	#### #### ####		
#9	#### #### ####		
#8	#### #### ####		
#7	#### #### ####		
#6	#### #### ####		
#5	#### #### ####		
#4	1 6 2018	OUTLET PLATFORM	JSK
#3	0 05 2017	INITIAL RELEASE	JSK

SCALE = NTS

imbriumr
47 JOHNSON DRIVE, WATERLOO, ON, N2L 5J6
T: 519.886.3177 F: 519.886.3178 E: info@imbrium.ca

THIS DRAWING IS THE PROPERTY OF IMBRIUM. REPRODUCTION OR USE FOR ANY PURPOSE OTHER THAN THAT AUTHORIZED BY IMBRIUM IS STRICTLY PROHIBITED. THE CONTRACTOR SHALL VERIFY AND BE RESPONSIBLE OF ALL DIMENSIONS. DO NOT SCALE THE DRAWING - ANY ERRORS OR OMISSIONS SHALL BE REPORTED TO IMBRIUM WITHOUT DELAY. THE DESIGN IS BASED ON INFORMATION PROVIDED TO IMBRIUM. THE CONTRACTOR SHALL VERIFY ALL INFORMATION PRIOR TO CONSTRUCTION. IT IS THE ULTIMATE RESPONSIBILITY OF THE SITE DESIGN ENGINEER TO ENSURE THAT THE PRODUCT(S) DEPICTED AND ALL ASSOCIATED DETAILS MEET ALL APPLICABLE LAWS, REGULATIONS, AND PROJECT REQUIREMENTS.

DATE: 10/13/2017	
DESIGNED: JSK	DRAWN: JSK
CHECKED: BSF	APPROVED: SP
PROJECT No.: EFO6	SEQUENCE No.: 1
SHEET: 1 OF 1	

ENGINEERING STAMP

LICENSED PROFESSIONAL ENGINEER
G. L. BRUNET
100191036
03/05/2022
PROVINCE OF ONTARIO

NO.	REVISION	DATE (DD/MM/YYYY)
#8		
#7		
#6		
#5		
#4	ISSUED FOR CITY COMMENTS	03 / 05 / 2022
#3	ISSUED FOR CITY COMMENTS	05 / 04 / 2021
#2	ISSUED FOR CITY COMMENTS	17 / 12 / 2020
#1	ISSUED FOR SPA	14 / 10 / 2020

BLANCHARD LETENDRE
ENGINEERING
767, Notre Dame, Local 42, Embrun, Ontario, K0A 1W1
(613) 693-0700 blengineering.ca

CLIENT:

OLIGO DEVELOPMENT
996-B ST. AUGUSTIN RD.
EMBRUN, ON

PROJECT:

NEW RESIDENTIAL DEVELOPMENT
3817 - 3843 INNES RD,
ORLEANS, ON

DRAWING:

DETAILS - 3

PAPER FORMAT:	24x36
DRAWN BY:	BF + GB
CHECKED BY:	GB
DATE:	04-2022
SCALE:	
PROJECT NUMBER:	20-184

PAGE: C502

DRAWING NUMBER : 18285

D07-12-20-0164