3455 Hawthorne Road

Scoped Transportation Impact Assessment

Prepared for:

Dymon Group of Companies
2-1830 Walkey Road
Ottawa, ON, K1H 8K3

Prepared by:

CGH TRANSPORTATION
13 Markham Avenue
Ottawa, ON K2G 3Z1

December 2020

PN: 2020-53

Table of Contents

List of Figures

Table of Tables

List of Appendices

1 Screening

This scoped TIA has been prepared to support the proposed development at 3455 Hawthorne Road in the City of Ottawa and will include Design Review component of the City of Ottawa Transportation Impact Assessment (TIA) Guidelines. The scope of this TIA has been confirmed with transportation staff from the City of Ottawa during an online meeting on December 1, 2020. Additionally, a Step 1 TIA Screening Form has been prepared and is included in Appendix A, along with the Certification Form for the Study PM.

2 Existing and Planned Conditions

2.1 Proposed Development

The subject property, located at 3455 Hawthorne Road, is zoned as Light Industrial Zone (IL). The property currently serves as an industrial storage site and is currently occupied by a small commercial building, which will be removed as part of this development. The proposed Dymon self-storage facility is 13,217 square metres, including an interior loading and parking area, and a reception area. According to the site plan, total of 22 parking spaces are proposed, out of which 17 parking slots are exterior, and five parking stalls are located in the interior loading / parking area. The site will also include two exterior loading docks.

Access to the site will be accommodated via Hawthorne Road, approximately 80 metres (Site Access #1) and 220 metres (Site Access #2) north of Hawthorne Road and Hunt Club Road intersection, measured from centreline to centreline. Site Access #1 will be restricted to right-in / right-out only due to a centreline median along Hawthorne Road and Site Access #2 will serve as a full-movement access. Trucks will enter the site by via Access #1 and leave the site though the Site Access #2.

Figure 1 illustrates the Study Area Context. Figure 2 illustrates the proposed concept plan.

Figure 1: Area Context Plan

Source: http://maps.ottawa.ca/geoOttawa/ Accessed: December 2, 2020

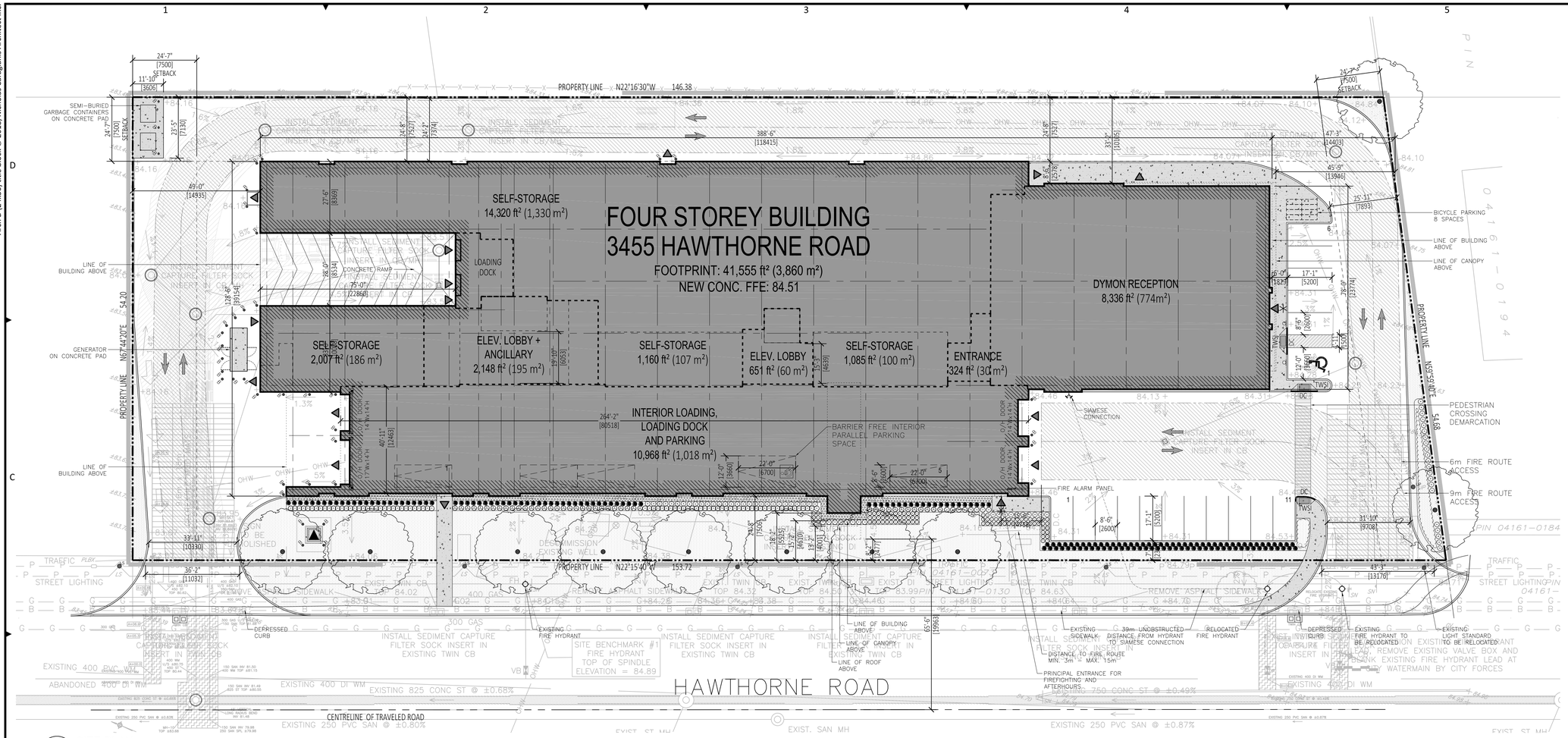

1 SITE PLAN
A-100 SCALE: 1:250

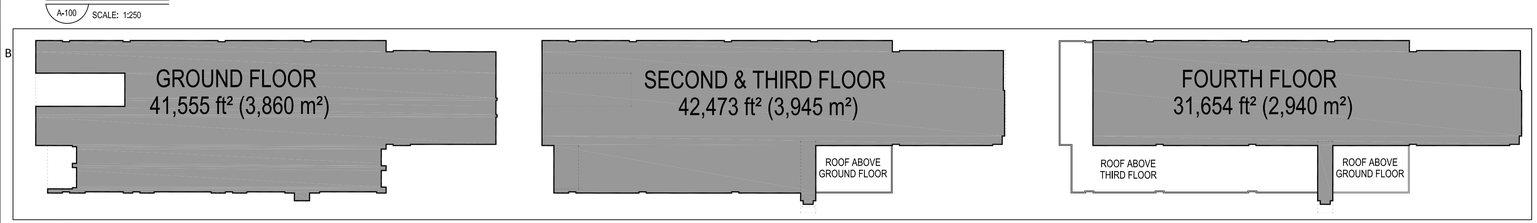

2 FLOOR PLATES
A-100 N.T.S.

REFER TO ELECTRICAL SITE PLAN FOR LIGHTING, TRANSFORMER AND GENERATOR DETAILS

SCALE 1 : 250
10 0 10 20 metres

BOUNDARY INFORMATION FROM SURVEY BY:
STANTEC GEOMATICS LTD. ONTARIO LAND SURVEYORS
COMPLETED ON NOVEMBER 27, 2019

LEGEND

- PROPOSED BUILDING LOCATION
- EXISTING NEIGHBORING BUILDINGS
- LANDSCAPED AREA
- CONCRETE/SIDEWALK
- BARRIER FREE PARKING CLEARANCE
- CURB
- DEPRESSED CURB
- NEW TREE/ VEGETATION (REFER TO LANDSCAPE PLAN FOR TYPE, SIZE AND LOCATION)
- EXISTING TREE (VEGETATION IS FOR REFERENCE ONLY, REFER TO LANDSCAPE PLAN)
- BARRIER FREE PARKING
- INTERIOR PARKING
- EXISTING PAVERS
- EXISTING CONCRETE/ SIDEWALK
- TWSI TACTILE WALKING SURFACE INDICATOR
- CATCH BASIN
- AREA DRAIN
- SIAMESE CONNECTION
- ENTRANCE/ EXIT LOCATION
- PRINCIPAL ENTRANCE
- TRANSFORMER
- FENCE & GATE
- MAN HOLE COVER
- UTILITY POLE
- FIRE HYDRANT
- NLS (NEW LIGHT STANDARD, REFER TO ELECTRICAL)
- BOLLARD
- FIRE ROUTE ACCESS / NO PARKING SIGN SEE DRAWING 2/A-101
- STOP SIGN SEE DRAWING 1/A-101
- VEHICULAR TRAFFIC DIRECTION

SITE STATISTICS

LEGAL DESCRIPTION OF PROPERTY:

PART OF LOT 5
CONCESSION 6 (RIDEAU FRONT)
GEOGRAPHIC TOWNSHIP OF GLOUCESTER
CITY OF OTTAWA
SURVEYED BY STANTEC GEOMATICS LIMITED
ONTARIO LAND SURVEYORS ON 2019-11-27

IL ZONE – ZONING PROVISIONS	REQUIRED	PROPOSED
Minimum Lot Area	2,000m2	8,132.5m2
Minimum Lot Frontage:	No minimum	153.7m
Maximum Lot Coverage:	65%	50%
Minimum Front and Corner Yard Setback:	7.5m	4.6m (marquee to property line) 4.0m (canopy to property line)
Minimum Interior Side Yard Setback:	7.5m	North: 14.9m South: 14.4m (marquee to property line) South: 13.9m (canopy to property line)
Minimum Rear Yard Setback:	7.5m	7.5m
Maximum Building Height:	18.0m	17.9m (Ave. grading to high point of roof)
Minimum Width of Landscape Area:	3m	Front Yard 7.5m
Maximum Floor Space Index: Minimum Vehicle Parking for Warehouse (storage facility) 0.8 per 100m2 of GFA =(12,412m2 / 100m2) x 0.8=99 10% reduction (Table 101)	2 89	1.72 17 Exterior 5 Interior
Retail 3.4 per 100m2 of GFA =(805m2 / 100m2) x 3.4	27	

IL ZONE – ZONING PROVISIONS	REQUIRED	PROPOSED
Minimum Drive Aisle Width	6.7m	7.3m
Minimum Bicycle Parking for Warehouse (storage facility) 1 per 2000m2 of GFA =(12,412m2 / 2,000m2) x1	6 spaces	8
Retail 1 per 250m2 of GFA =(805m2 / 250m2) x1	3 spaces	
Loading Spaces:	N/A	2 Exterior
Accessible Parking Space	N/A	1 Exterior 1 Interior

SITE AREAS

LOT AREA	8,132.5 m2 (100%)
PAVED AREA	3,126 m2 (38.4%)
LANDSCAPED AREA	1,144 m2 (14.1%) INCLUDES CONC. SIDEWALKS
BUILDING FOOTPRINT	3,860 m2 (47.5%)

BUILDING AREAS

GROUND FLOOR	3,860 m²	(41,555 ft²)	26 %
MECHANICAL & ELECTRICAL MEZZANINE	106 m²	(1,141 ft²)	1 %
SECOND TO FOURTH FLOOR	10,832 m²	(116,600 ft²)	73 %
TOTAL GROUND TO FOURTH FLOOR (**)	14,799 m²	(159,296 ft²)	100 %

(**) SECOND & THIRD FLOOR: 42,473 ft² (3,945 m²) PER FLOOR
FOURTH FLOOR: 31,654 ft² (2,940 m²)

GROSS FLOOR AREA (GFA)

BUILDING FOOTPRINT (INCLUDES INT. LOADING & PARKING AND LOADING DOCK)	3,860 m²	(41,555 ft²)	27.1 %	
MECHANICAL & ELECTRICAL SERVICE MEZZANINE	106 m²	(1,141 ft²)	1 %	
ELEVATOR SHAFT AND STAIRS (GROUND TO 4TH FLOOR)	457 m²	(4,924 ft²)	3 %	
ELEVATOR LOBBY 1 & 2 + ANCILLARY SPACES GROUND FLOOR	212 m²	(2,280 ft²)	1.6 %	100%
INTERIOR LOADING & PARKING AND LOADING DOCK (***)	1,019 m²	(10,968 ft²)	7.2 %	100%
RECEPTION + DYMON RETAIL (***)	805 m²	(8,660 ft²)	5.7 %	100%
TOTAL SELF STORAGE GROUND TO 4TH (***)	12,101 m²	(130,249 ft²)	85 %	100%
TOTAL GFA 4-STOREY BLDG. (****)	14,236 m²	(153,231 ft²)		WITHOUT INTERIOR LOADING & PARKING AND LOADING DOCK
TOTAL GFA	13,217 m²	(142,263 ft²)		

(***) EXCLUDES STAIR AND MECHANICAL & ELECTRICAL MEZZANINE
(****) EXCLUDES ELEVATORS AND STAIRS (2nd TO 4th FLOOR)

nicholas caragianis architect inc.
137 Pamilla Street
Ottawa ON K1S 3K9
613 237 6801 ncarchitect.ca

PROJECT NORTH: TRUE NORTH

ARCHITECT'S SEAL: ONTARIO ASSOCIATION OF ARCHITECTS — NICHOLAS CARAGIANIS LICENCE 5057

Notes: Contractor must verify all drawings, dimensions, details and specifications and report any discrepancies to the architect before proceeding with work. All drawings and specifications are instruments of service and the property of the architect, and these must be returned at the completion of the project, and may not be reproduced without the architect's written permission. All drawings are to be read in conjunction with specifications and consultants' documents. Do not scale drawings. Do not use for construction unless both indicated as "For Construction" and bearing the architect's stamp and signature. All construction to meet local, provincial and federal requirements.

PLANNING & URBAN DESIGN
Fotenn Planning + Design
223 McLeod Street, Ottawa ON K2P 0Z8
tel: (613) 730-5709 fax: (613) 730-1136
www.mhbcplan.com

DESIGN ARCHITECT
TACT Architecture Inc
660R College Street (Rear Lane) Toronto ON. M6G 1B8
tel: (416) 516-1949
email: info@tactdesign.ca

ISSUE	YYYY/MM/DD	ISSUES DESCRIPTION
6	2020/12/15	ISSUED FOR SPC & ZBLA
5	2020/11/23	FOR COORDINATION
4	2020/11/10	FOR COORDINATION
3	2020/06/02	FOR REVIEW
2	2020/05/26	FOR REVIEW
1	2020/05/20	FOR REVIEW

DYMON STORAGE

CLIENT NAME AND ADDRESS:
DYM. CAPITAL CORP.
2-1830 WALKLEY ROAD
OTTAWA ON. K1H 8K3

PROJECT NAME & LOCATION:
HAWTHORNE
3455 HAWTHORNE ROAD
OTTAWA ON

NCA PROJECT NUMBER: 2019.0109
FILE NUMBER:
OWNER'S CONTRACT NUMBER:
OWNER'S PROJECT NUMBER:
CAD FILE NAME: 19109-A-100-SP

SHEET TITLE: SITE PLAN

SCALE: 1:250
DRAWN BY: KLK / SG
DATE CREATED: 2020.05.14
SHEET ID: A-100

2.2 Dymon Business Model and Site Context

Dymon offers a unique customer-centric storage solution unlike anything else in the marketplace. Unlike traditional self storage operations, Dymon facilities are located along arterial corridors, in very prominent locations within close proximity to its residential and business customers. With its high level of security, total humidity and climate control environment, and relentless focus on customer service, Dymon offers a reliable extension to people's homes and businesses. The primary access to Dymon's facilities is via an interior loading area (with secure access 24 hours a day) that protects customers from the weather while loading/unloading their possessions. By providing this interior area the reliance on surface parking is significantly reduced, as up to 75% of visitors to the site during any period use the interior loading bay, rather than the provided parking lot. In fact, any visit after the initial visit uses the interior loading area as this is the direct access to the storage lockers. Dymon sites include a reception and a retail area that is not used directly for self-storage. This space has several functions, including allowing space for new customers to come in and rent a storage locker or purchase storage supplies (boxes, tape, bubble wrap, etc.). Recently (Spring 2019) Dymon has expanded the services available in this space to include home storage solutions including closet organizers, under counter shelving, and storage bins. This service is now offered at several Ottawa Dymon locations.

2.3 Existing Conditions

2.3.1 Area Road Network

Hawthorne *Road*:

Hawthorne Road is a City of Ottawa arterial road with a four-lane cross-section including a sidewalk on the west side, curbside bike lane, centreline medians, and auxiliary lanes at major intersections. The posted speed limit is 70km/h and the City of Ottawa reserves a 44.5 metre right of way north of Hunt Club.

2.3.2 Intersections

Hawthorne *Road at Hunt Club Road*

The intersection of Hawthorne Road at Hunt Club Road is a signalized intersection with auxiliary left turn lanes and right turn channels on each approach. No turn restrictions were noted.

2.3.3 Cycling and Pedestrian Facilities

Figure 3 illustrates the pedestrian facilities in the study area and Figure 4 illustrates the cycling facilities.

Sidewalk is provided along the west side of Hawthorne Road. On the east side of Hawthorne Road, a sidewalk is extended north of Hunt Club Road intersection to the southern edge of the subject property line. Cycling facilities include curbside bike lanes along both sides of Hawthorne Road.

Figure 3: Study Area Pedestrian Facilities

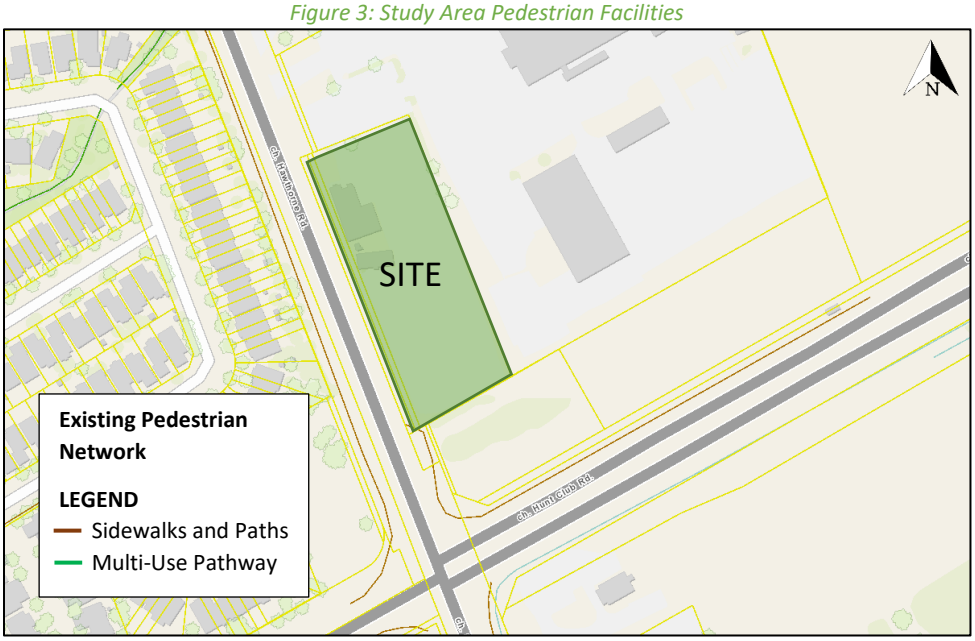

Source: http://maps.ottawa.ca/geoOttawa/ Accessed: December 2, 2020

Figure 4: Study Area Cycling Facilities

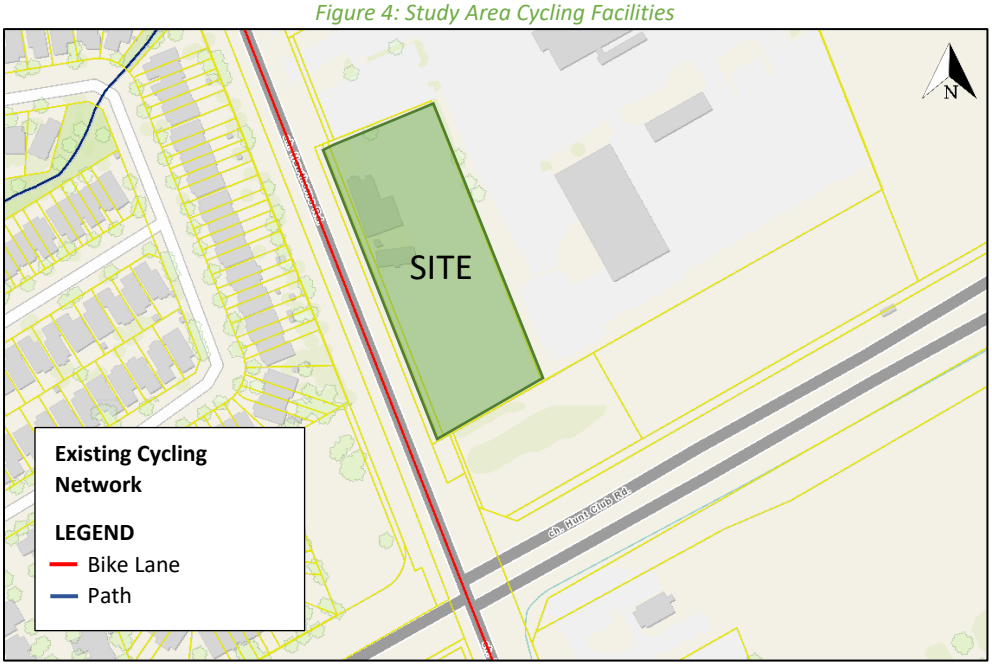

Source: http://maps.ottawa.ca/geoOttawa/ Accessed: December 2, 2020

3 Exemption Review

Based on discussions with the City of Ottawa staff, the magnitude of this development, and the anticipated access locations, a reduced scope TIA has been prepared documenting the trip generation, accesses, site circulation, and parking.

4 Development-Generated Travel Demand

4.1 Trip Generation

To better understand the trip generation of the proposed development, a proxy site trip generation survey has been undertaken at three established, comparable Dymon sites in Ottawa. These sites have been selected as they are similar in size to the proposed development and have similar features (GFA, Land Uses, Arterial Road Access). The selected sites include the new Dymon retail functions and sell the home storage solutions discussed previously. These will operate in the same manner as the proposed site plan at 3455 Hawthorne Road and are appropriate proxy sites for comparison. Table 1 summarizes the site statistics for the surveyed and proposed sites. The number of parking stalls per the approved Site Plan have been documented in Table 1, however the parking provisions will be discussed further in later sections of this letter.

Table 1: Site Statistics Comparison

Site	Reception/Retail GFA(m^2)	Self-Storage GFA (m^2)	Total GFA (m^2)	Parking Stalls (SPA)
1554 Carling Avenue	2,714	18,204	21,685	59 Exterior (4 Loading Area)
323 Coventry Road	867	11,484	12,351	44 Exterior[1]
300 Greenbank Road	~700	8,495	9,195	9 Exterior (4 Loading Area)
3455 Hawthorne Road	805	12,412	13,217	17 Exterior (5 Loading Area)

Note 1: some of these parking stalls are restricted due to truck movements. This will be discussed further below.

Table 2 summarizes the surveyed trip generation for 1554 Carling Avenue, 323 Coventry Road (two survey dates), and 300 Greenbank Road.

Table 2: Proxy Site Trip Generation

Site	AM Peak Hour			PM Peak Hour			Sat Peak Hour		
	In	Out	Total	In	Out	Total	In	Out	Total
1554 Carling	6	2	8	13	9	22	-	-	-
323 Coventry (May Counts)	14	9	23	17	19	36	-	-	-
323 Coventry (June Counts)	7	5	12	11	15	26	11	15	26
300 Greenbank	7	4	11	10	10	20	14	18	32

The selected sites have a wide range of gross floor areas. To accurately compare these sites to the proposed site, the trip generation rate has been determined for each survey in terms of vehicle trips generated per 1000 square metres. Table 3 summarizes the trip generation rates for each site. Appendix B includes the trip generation proxy counts and site plans for each surveyed site.

Table 3: Proxy Site Trip Generation Rates

Site	GFA (m^2)	AM Peak Hour Rate (/1000 sm gfa)	PM Peak Hour Rate (/1000 sm gfa)	Sat Peak Hour Rate (/1000 sm gfa)
1554 Carling	21,685	0.37	1.01	N/A
323 Coventry (May)	12,351	1.86	2.91	N/A
323 Coventry (June)	12,351	0.97	2.11	2.11
300 Greenbank	9,195	1.20	2.18	3.48
Average Rate	-	1.10	2.05	2.79

The trip generation rates above have been examined and these sites do not have a strong correlation between increased gross floor area and increased trip generation. Figure 5 is a graph illustrating the relationship between trip generation and gross floor area. A linear trendline has been added to the graph to illustrate the correlation.

Figure 5: Trip Generation vs. Gross Floor Area

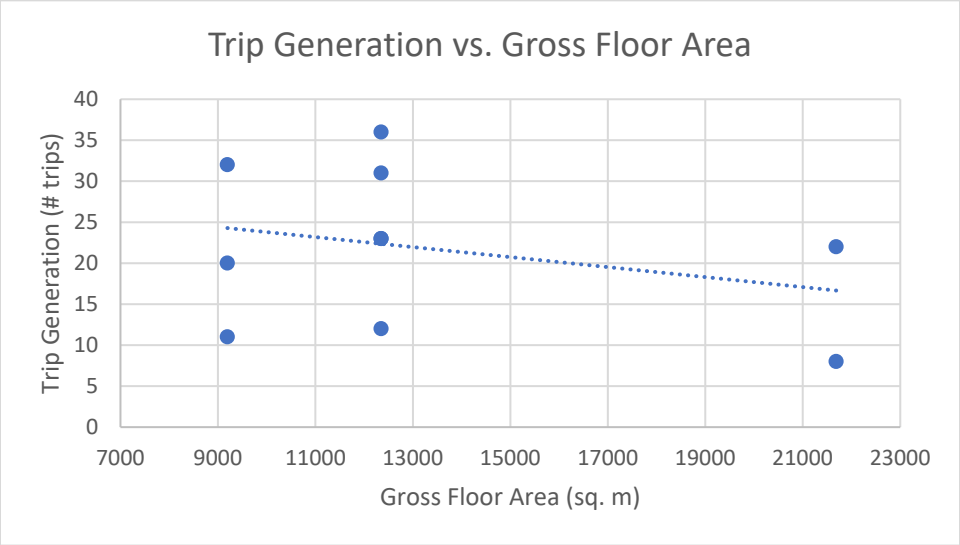

Given the number of sites surveyed, and the various survey dates, an average of the trip generation rates has been calculated. The average trip generation rate has been applied to the proposed site to determine the anticipated trip generation of the subject development. Table 4 summarizes the projected trip generation for the proposed development of a Dymon storage facility at 3455 Hawthorne Road.

Table 4: Projected 3455 Hawthorne Site Trip Generation

Site	AM Peak Hour			PM Peak Hour			Sat Peak Hour		
	In	Out	Total	In	Out	Total	In	Out	Total
Average Rate	10	5	15	13	14	27	16	21	37

For comparison ITE Trip Generation Rates for ITE Land Use Code (LUC) 151 Mini Warehouse have also been used to calculate the trip generation. It should be noted that the ITE 10th Edition Trip Generation Manual only has a single sample for the Saturday, Peak Hour of Generator data set. This data set has been documented herein but is not reliable and should not be used in traffic analysis. Table 5 summarizes the ITE Trip Generation rates for LUC 151 Mini-Warehouse. Appendix C includes a summary of the description of LUC 151. Table 6 summarizes the trip generation for the proposed site based on the ITE LUC 151 rates.

Table 5: ITE Trip Generation LUC 151 Mini-Warehouse

	AM Peak	PM Peak	Sat Peak*
Average Rate (/1000 sf gfa)	0.10	0.17	0.31*
In/Out	60%/40%	47%/53%	59%/41%*

*Small Sample Size, Data should be used with caution. Single data set provided in ITE Trip Generation Manual 10th Edition.

Table 6: ITE LUC 151 Trip Generation

Land Use	AM Peak Hour			PM Peak Hour			Sat Peak Hour		
	In	Out	Total	In	Out	Total	In	Out	Total
LUC 151 Trip Gen	8	6	14	12	12	24	26	18	44

The proxy site trip generation results are similar to the projections created using ITE trip rates. The Saturday peak hour should not be relied on as the ITE 10th Edition Trip Generation Manual contains a single sample for this LUC.

Based on the proxy site trip generation exercise there is no need to undertake a TIA for the proposed development, as the total number of trips generated is less than 60 in any peak hour which is the threshold for undertaking a TIS in the City of Ottawa TIA Guidelines.

5 Development Design

5.1 Circulation and Access

The proposed site plan and access configuration have been reviewed using two design vehicles including an HSU (standard delivery truck) and WB-20 tractor trailer (infrequent delivery truck). It is assumed that the HSU trucks will access the interior and exterior loading areas as well as the garbage bins at the rear of the property, and the WB-20 will utilize the exterior loading dock. Appendix D includes two drawings illustrating the turning paths for all design vehicles. All turning paths are accommodated by the proposed curbs and driveways.

6 Parking

6.1 Parking Generation / Supply

The proposed development will include 17 exterior parking stalls, five defined interior parking stalls, two exterior loading docks, and space in the interior loading area for additional overflow parking / unloading vehicles. The zoning requirements and parking provisions are summarized in Table 7.

Table 7: Vehicle Parking Requirement Zoning By-Law Approach

Land Use	GFA (s.m.)	Parking Rate (Required)	Parking Spaces (Required)	Parking Spaces (Provided)	Difference
Self-Storage Warehouse	12,412	*N95: 0.8 per 100 square metres of gross floor area; 10% reduction (table 101)*	89	22	-94
Reception & Retail	805	*N79: 3.4 per 100 square metres of gross floor area*	27		

As noted above the proposed site does not include the number of parking stalls prescribed by the zoning by-law. The proposed site includes 22 parking spaces, where as the requirement is 116 parking spaces.

To support the proposed parking variance, a parking survey has been undertaken at two of the proxy sites used for the Trip Generation. The Parking Surveys were undertaken on the same dates, and locations as the Trip Generation Proxy Surveys. Appendix E contains the proxy parking generation counts and calculation sheets for 323 Coventry Road and 300 Greenbank Road.

323 Coventry includes parking operations that will not be present on the proposed 1370 Neilson Road site. 323 Coventry currently has parking stalls reserved for long term parking. While these are reserved for this use it is possible for vehicles to park in these stalls throughout the day. To ensure that the daily, short-term, high turnover parking requirements are accurately captured the parking survey for this site was undertaken starting 30 minutes prior to the opening of the site and ending 30 minutes after the site closed for business. This was done for both the weekday and weekend survey periods. The minimum number of parking stalls occupied throughout the entirety of each survey period was noted. This was then subtracted from the maximum total parking demand. This represents the maximum short-term demand. Additionally, as noted on the approved site plan there are 11 parking stalls that are not in use to accommodate truck turning movements. Through the site survey it was determined that eight parking stalls are not in use in this area and are signed to prohibit parking. Table 8 below summarizes the total parking provisions for 323 Coventry Road.

Table 8: 323 Coventry Road Parking Provisions

Total Parking Stalls	Unsecured Parking Stalls	Secured Parking Stalls	Restricted to Accommodate Truck Movements
44	18	26	8

The 18 unsecured parking stalls noted above are potentially available for short-term parking (the secured parking is reserved for long-term parking). However, the survey found that four of the unsecured parking stalls were occupied at the start / end of the survey and are therefore not available for use as short-term parking stalls. The remaining 14 parking stalls were assumed to be available for short-term parking use.

300 Greenbank Road does not accommodate long term parking, as a result there was no need to account for the impact in the counts, and the peak periods were surveyed to capture a relevant data set.

Table 9 summarizes the parking supply and parking demand for the two sites as well as the calculated parking supply rate and parking demand rate. The exterior parking supply has been included. For 323 Coventry Road this supply has been calculated based on the number of parking stalls not in use for long-term parking.

As Dymon's business model makes use of an interior loading space, that can accommodate more vehicles than the defined parking stalls, the interior parking supply has been tabulated based on the maximum demand for interior parking observed at each site.

Table 9: Parking Survey Summary

Site	GFA Storage & Retail (m^2)	Parking Supply (Exterior)	Parking Supply (Max Interior Usage)	Parking Demand	Parking Demand Rate
323 Coventry	12,351	14	7	11	0.09 / 100 m^2
300 Greenbank	9,195	9	5	11	0.12 / 100 m^2

Similar to the trip generation it was found that an increase in parking demand is not strongly correlated to an increase in gross floor area. Based on the proposed site plan for 3455 Hawthorne Road the gross floor area, and parking stall provisions, the parking rate provided for the proposed development has been calculated. Table 10 summarizes the 3455 Hawthorne Road parking provisions.

Table 10: 3455 Hawthorne Road Parking Provisions – Dymon

Use	GFA (m^2)	Parking Provided	Parking Rate (Provided)
Self-Storage Warehouse, Reception & Retail	13,217	22	0.165/ 100 m^2

It has been calculated that parking is proposed to be provided at a rate of 0.165 per each 100 square metres of gross floor area. While this is less than the parking rate requested by the City of Ottawa, this demand rate is higher than the surveyed parking rates at comparable Dymon sites.

In addition to the above, patrons will utilize the interior loading space more efficiently than other areas of the site as they will park within the interior loading area to facilitate loading and unloading. On the surveyed sites more than 40% of all parked vehicles utilized the interior loading area for parking.

As a supplementary analysis, the number of vehicles entering the interior loading area, versus the rest of the site was counted. Table 11 summarizes the interior loading bay usage.

Table 11: Interior Loading Bay Usage

Site	Weekday		Saturday	
	Exterior%	Interior%	Exterior%	Interior%
323 Coventry	57%	43%	58%	42%
300 Greenbank	42%	58%	54%	46%

As shown above the interior loading area is of critical importance to the parking operations of the site.

In summary the parking provisions for the Dymon self-storage use is adequate. Table 12 summarizes the total parking demand based on the proxy site surveys.

Table 12: Parking Requirement – Demand Approach

Land Use	GFA (s.m.)	Parking Rate (Required)	Parking Spaces (Required)	Parking Spaces (Provided)	Difference
Self-Storage Warehouse, Reception & Retail	13,217	0.165/100 s.m.	22	22	0

As shown above, the parking provided on the site will satisfy the projected parking demand, based on the proxy site surveys. Therefore, based on the provided interior and exterior parking the site will provide adequate parking to support the proposed use.

6.2 Bicycle Parking

Bicycle parking requirements and provisions are summarized in Table 13.

Table 13: Bicycle Parking Requirement - Zoning By-Law Approach

Land Use	GFA (s.m.)	Parking Rate (Required)	Parking Spaces (Required)	Parking Spaces (Provided)
Self-Storage Warehouse	12,412	*1 per 2000 square metres of gross floor area*	6	8
Reception & Retail	805	*1 per 250 square metres of gross floor area*	3	

As shown above, the zoning by-law requirements for bicycle parking are 9 spaces, where the bicycle parking provisions are 8 spaces. This marginal difference is considered acceptable as it is unlikely that a patron will travel to a self-storage unit using this mode of travel, and the provision of eight bicycle spaces are expected to meet the needs of the few staff members commuting to the site.

7 Conclusion

Based on the key requirements of the agreed to scope, the following conclusions are made for this site:

- The trip generation analysis demonstrates that this site will not trigger the need for a TIS.
- Based on the proxy site parking surveys the provided parking will adequately serve the proposed Dymon self-storage facility.
- Truck turning templates have been performed to ensure that the site access and drive aisles can be navigated by the design vehicles for the site. All turning paths are accommodated by the proposed curbs and driveways.

Based on this Transportation and Parking Summary, the proposed development should be approved, from a transportation perspective.

Viktoriya Zaytseva, E.I.T
437-221-1343
viktoriya.zaytseva@cghtransportation.com

Mark Crockford, P. Eng.
905-251-4070
mark.crockford@cghtransportation.com

Appendix A

TIA Screening Form and PM Certification Form

CGH TRANSPORTATION

13 Markham Avenue
Ottawa ON K2G 3Z1

City of Ottawa 2017 TIA Guidelines
Step 1 - Screening Form

Date:	23-Nov-20
Project Number:	2020-53
Project Reference:	Dymon 3455 Hawthorne

1.1 Description of Proposed Development	
Municipal Address	3455 Hawthorne Road
Description of Location	Located along Hawthorne Rd. approximately 70 metres north of Hawthorne Rd. at Hunt Club Rd.
Land Use Classification	IL
Development Size	16,000 Square Metres
Accesses	Two accesses on Hawthorne Rd.
Phase of Development	Assumed 1 Phase for TIA
Buildout Year	2023
TIA Requirement	Full TIA Required

1.2 Trip Generation Trigger		
Land Use Type	Industrial	
Development Size	16,000.00	G.F.A
Trip Generation Trigger	Yes	

1.3 Location Triggers	
Does the development propose a new driveway to a boundary street that is designated as part of the City's Transit Priority, Rapid Transit or Spine Bicycle Networks?	Yes
Is the development in a Design Priority Area (DPA) or Transit-oriented Development (TOD) zone?	No
Location Trigger	Yes

1.4. Safety Triggers	
Are posted speed limits on a boundary street 80 km/hr or greater?	No
Are there any horizontal/vertical curvatures on a boundary street limits sight lines at a proposed driveway?	No
Is the proposed driveway within the area of influence of an adjacent traffic signal or roundabout (i.e. within 300 m of intersection in rural conditions, or within 150 m of intersection in urban/ suburban conditions)?	Yes
Is the proposed driveway within auxiliary lanes of an intersection?	No
Does the proposed driveway make use of an existing median break that serves an existing site?	No
Is there is a documented history of traffic operations or safety concerns on the boundary streets within 500 m of the development?	No
Does the development include a drive-thru facility?	No
Safety Trigger	Yes

TIA Plan Reports

On 14 June 2017, the Council of the City of Ottawa adopted new Transportation Impact Assessment (TIA) Guidelines. In adopting the guidelines, Council established a requirement for those preparing and delivering transportation impact assessments and reports to sign a letter of certification.

Individuals submitting TIA reports will be responsible for all aspects of development-related transportation assessment and reporting, and undertaking such work, in accordance and compliance with the City of Ottawa's Official Plan, the Transportation Master Plan and the Transportation Impact Assessment (2017) Guidelines.

By submitting the attached TIA report (and any associated documents) and signing this document, the individual acknowledges that s/he meets the four criteria listed below.

CERTIFICATION

1. I have reviewed and have a sound understanding of the objectives, needs and requirements of the City of Ottawa's Official Plan, Transportation Master Plan and the Transportation Impact Assessment (2017) Guidelines;
2. I have a sound knowledge of industry standard practice with respect to the preparation of transportation impact assessment reports, including multi modal level of service review;
3. I have substantial experience (more than 5 years) in undertaking and delivering transportation impact studies (analysis, reporting and geometric design) with strong background knowledge in transportation planning, engineering or traffic operations; and
4. I am either a licensed[1] or registered[2] professional in good standing, whose field of expertise [check √ appropriate field(s)] is either transportation engineering √ or transportation planning □.

[1,2] License of registration body that oversees the profession is required to have a code of conduct and ethics guidelines that will ensure appropriate conduct and representation for transportation planning and/or transportation engineering works.

City Of Ottawa
Infrastructure Services and Community Sustainability
Planning and Growth Management
110 Laurier Avenue West, 4th fl.
Ottawa, ON K1P 1J1
Tel. : 613-580-2424
Fax: 613-560-6006

Ville d'Ottawa
Services d 'infrastructure et Viabilité des collectivités
Urbanisme et Gestion de la croissance
110, avenue Laurier Ouest
Ottawa (Ontario) K1P 1J1
Tél. : 613-580-2424
Télécopieur: 613-560-6006

Dated at ___Newmarket_____ this __14th__ day of _____July_____, 2020.
(City)

Name: _____Mark Crockford_____
(Please Print)

Professional Title: _____Professional Engineer_____

_____
Signature of Individual certifier that s/he meets the above four criteria

Office Contact Information (Please Print)
Address: 628 Haines Road
City / Postal Code: Newmarket / L3Y 6V5
Telephone / Extension: (905) 251-4070
E-Mail Address: Mark.Crockford@CGHTransportation.com

LICENSED PROFESSIONAL ENGINEER
M. B. CROCKFORD
100152912
July 14, 2020
PROVINCE OF ONTARIO

Appendix B

Proxy Site Trip Generation Data and Site Plans

CGH TRANSPORTATION

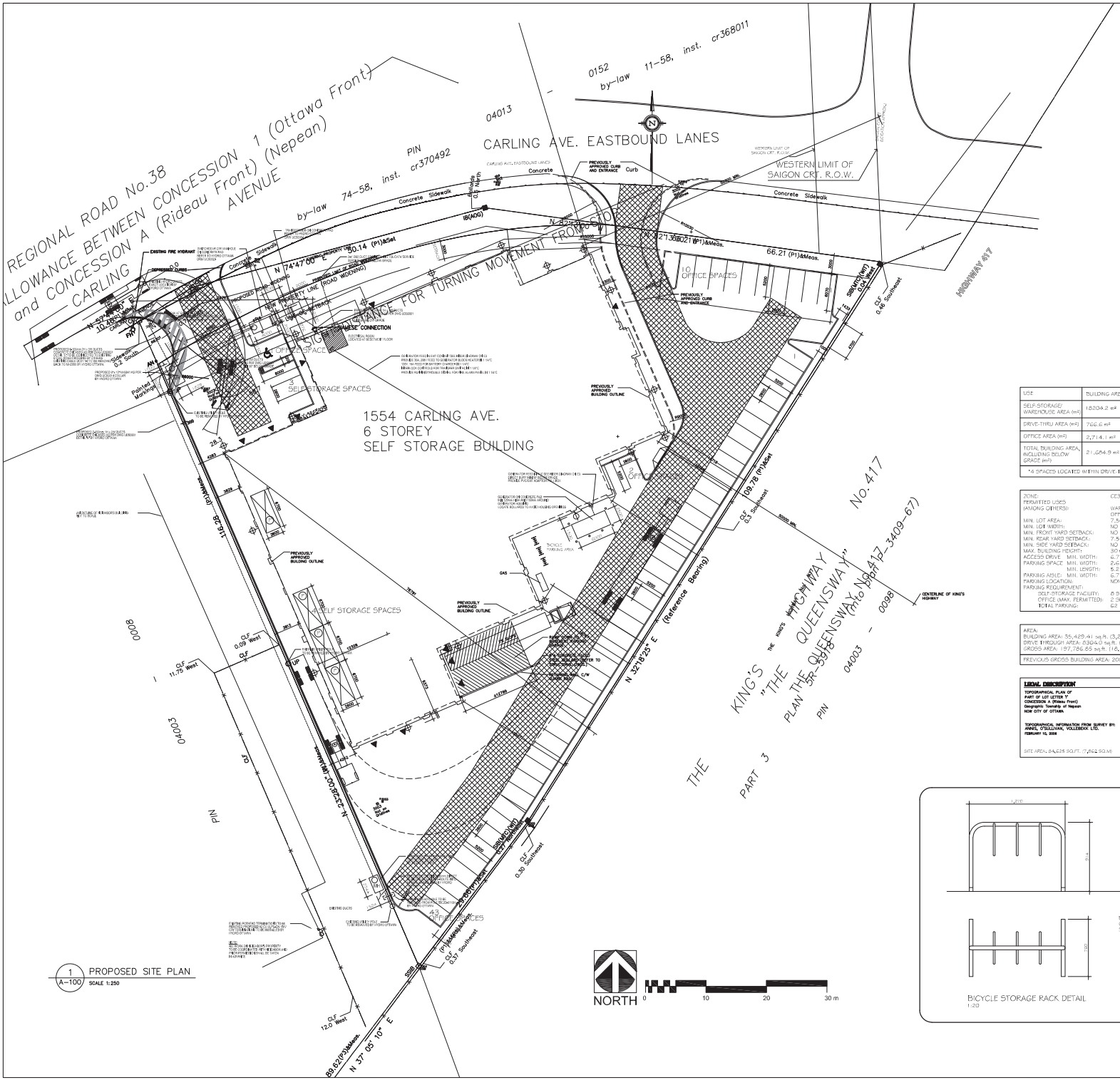

1 PROPOSED SITE PLAN
A-100 SCALE 1:250

LEGEND

- NEW BUILDING
- INDICATES BUILDING ENTRANCE
- 150 mm CONCRETE CURB
- CONCRETE SIDEWALK
- DEPRESSED CURB
- FIRE LANE
- LS EXISTING LIGHT STANDARD
- WALL-MOUNTED LIGHT FIXTURE
- FIRE HYDRANT
- SIAMESE FIRE CONNECTION
- CONCRETE FILLED STEEL BOLLARD
- DYMON PEDESTAL
- SEPT 29, 2008 REVISED SITE PLAN

USE	BUILDING AREA	PARKING RATE (TABLE 110)	PARKING REQUIRED	PARKING PROVIDED
SELF STORAGE/ WAREHOUSE AREA (m²)	18204.2 m²	8 SPACES	8 SPACES	8 SPACES*
DRIVE-THRU AREA (m²)	766.6 m²	N/A	N/A	N/A
OFFICE AREA (m²)	2,714.1 m²	2 SPACES/100m²	55 SPACES	55 SPACES
TOTAL BUILDING AREA, (INCLUDING BELOW GRADE (m²)	21,684.9 m²	N/A	N/A	N/A

*4 SPACES LOCATED WITHIN DRIVE THRU AREA. (P)

ZONE:	CE3 [1002] F(2.5) Sch. 68
PERMITTED USES (AMONG OTHERS):	WAREHOUSE OFFICE
MIN. LOT AREA:	7,500 m² (61,8008 s.f.)
MIN. LOT WIDTH:	NO MINIMUM
MIN. FRONT YARD SETBACK:	NO MINIMUM
MIN. REAR YARD SETBACK:	7.5 m (24.6 ft.)
MIN. SIDE YARD SETBACK:	NO MINIMUM
MAX. BUILDING HEIGHT:	30 m
ACCESS DRIVE MIN. WIDTH:	6.7 m (21.98 ft.)
PARKING SPACE MIN. WIDTH:	2.6 m (8.53 ft.)
MIN. LENGTH:	5.2 m (17.06 ft.)
PARKING AISLE MIN. WIDTH:	6.7 m (21.98 ft.)
PARKING LOCATION:	NONE IN REQUIRED FRONT YARD SETBACK
PARKING REQUIREMENT:	
SELF-STORAGE FACILITY:	8 SPACES
OFFICE (MAX. PERMITTED):	2 SPACES / 100 m² G.F.A. = 54 SPACES
TOTAL PARKING:	62

AREA:
BUILDING AREA: 35,429.41 sq.ft. (3,291.5 sq.m)
DRIVE THROUGH AREA: 8304.0 sq.ft. (771.5 sq.m)
GROSS AREA: 197,786.65 sq.ft. (18,375.0 sq.m.)

PREVIOUS GROSS BUILDING AREA: 200,101.1 sq.ft. (18,590 sq.m)

LEGAL DESCRIPTION

TOPOGRAPHICAL PLAN OF
PART OF LOT LETTER "I"
CONCESSION A (Rideau Front)
Geographic Township of Nepean
NOW CITY OF OTTAWA

TOPOGRAPHICAL INFORMATION FROM SURVEY BY:
ANNIS, O'SULLIVAN, VOLLEBEKK LTD.
FEBRUARY 15, 2008

SITE AREA: 84,625 SQ.FT. (7,862 SQ.M)

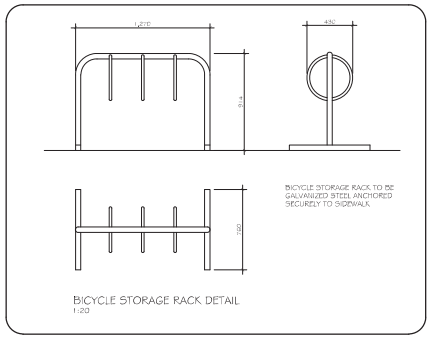

GENERAL NOTES

1. DO NOT SCALE DRAWINGS. FIGURED DIMENSIONS ONLY TO BE USED.

2. IT IS THE RESPONSIBILITY OF THE CONTRACTOR TO CHECK AND VERIFY ALL DIMENSIONS ON SITE AND REPORT ANY DISCREPANCIES TO THE ARCHITECT.

3. ALL WORK DESCRIBED UNDER THIS CONTRACT TO COMPLY WITH ONTARIO BUILDING CODE, 2006 AND/OR NATIONAL BUILDING CODE, 2005 AND OTHER CODES AND BY-LAWS IN EFFECT.

ISSUE RECORD

ISSUE	REV	DESCRIPTION	DATE
01	00	FOR COORDINATION	28/MAR/08
02	01	FOR PERMIT	04/JUL/08
03	02	FOR SITE PLAN	28/AUG/08
04	03	FOR PERMIT - REVISED	12/SEP/08
05	04	FOR REVISED SITE PLAN	29/SEP/08
06	05	FOR FOUNDATION PERMIT	12/NOV/08
07	06	FOR COORDINATION	22/JUL/11
08	07	FOR COORDINATION	03/AUG/11
09	08	FOR REVIEW	21/SEP/11
10	09	FOR COORDINATION	28/SEP/11
11	10	FOR COORDINATION	04/OCT/11
12	11	FOR CLIENT REVIEW	21/OCT/11
13	12	FOR COORDINATION	07/DEC/11
14	13	ISSUED FOR REVISED BUILDING PERMIT	21/DEC/11
15	14	ISSUED FOR REVIEW	11/JAN/12
16	15	FOR COORDINATION	23/JAN/12
17	16	FOR COORDINATION	10/FEB/12
07	23/JAN/12	ISSUED FOR REVISED BUILDING PERMIT	
06	21/DEC/11	ISSUED FOR REVISED BUILDING PERMIT	
05	28/SEP/11	GENERAL REVISIONS	
04	31/SEP/11	GENERAL REVISIONS	
03	29/SEP/08	CITY COMMENTS	
02	12/SEP/08	CITY COMMENTS	
01	28/AUG/08	ENTRANCE SHIFTED	
00	MAR/08	ORIGINAL DOCUMENT	
No	DATE	REVISION	

PROJECT NORTH

CLIENT
DYMON CAPITAL CORPORATION
TEL: 613-247-0858
FAX: 613-247-7730

CONSULTANTS
CLELAND JARDINE ENGINEERING
STRUCTURAL ENGINEERS
TEL: 613-591-1533
FAX: 613-591-1703
GOODKEY WEEDMARK & ASSOCIATES
MECHANICAL/ELECTRICAL ENGINEERS
TEL: 613-727-6112
FAX: 613-727-5115
SITE PLANNING BY
FOTENN PLANNING & URBAN DESIGN
Farrow Architects Inc.
TEL: 613-725-2294
FAX: 613-724-8332

PROJECT TITLE
DYMON SELF STORAGE
CARLING AVENUE

DRAWING TITLE
PROPOSED SITE PLAN

DATE	DRAWN	JOB No	DRAWING No
MAR. 2008	MB/EC	1975	A-100
SCALE AS SHOWN	CHECKED ER		

ARCHITECTURAL

Turning Movement Count
Summary, AM and PM Peak Hour Flow Diagrams

Automobiles, Taxis, Light Trucks, Vans, SUV's, Motorcycles, Heavy Trucks, Buses, and School Buses

Carling Avenue & Dymon (1554 Carling Ave.) EAST Access — **Ottawa, ON**

All Vehicles
(Except Bicycles & Electric Scooters)

Tuesday, 14 May 2019
0700-0900 & 1600-1800
4 Hour Survey
City of Ottawa Ward ► 15

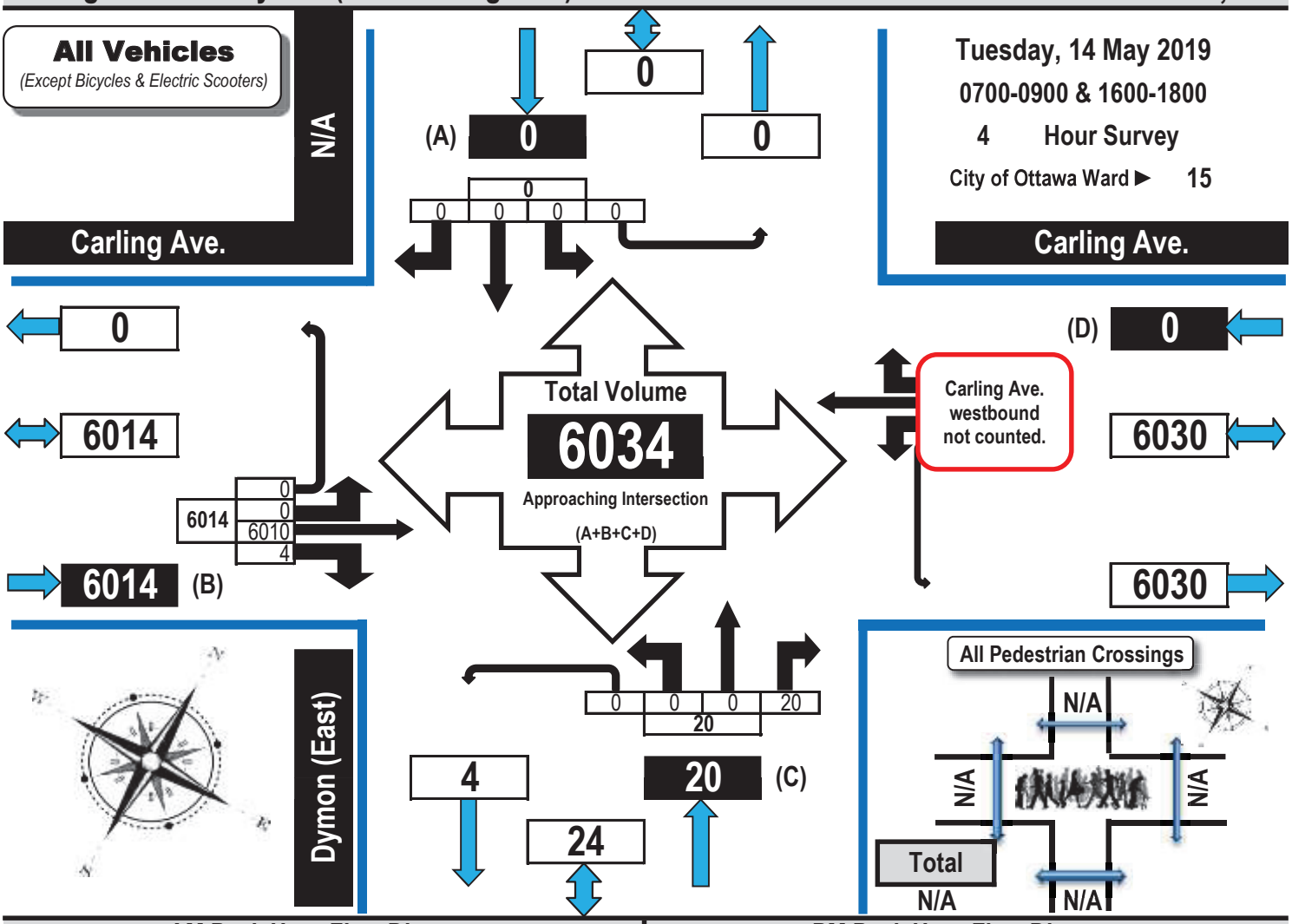

AM Peak Hour Flow Diagram

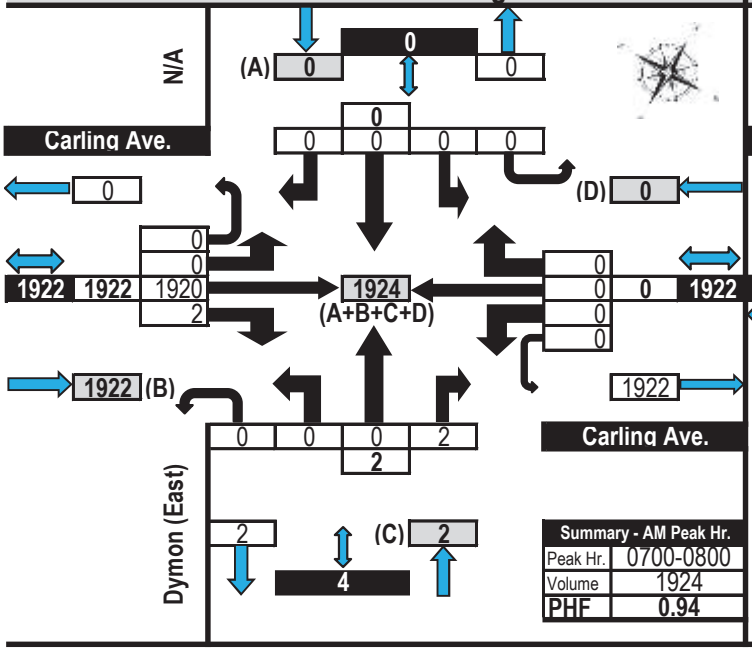

Summary - AM Peak Hr.	
Peak Hr.	0700-0800
Volume	1924
PHF	0.94

PM Peak Hour Flow Diagram

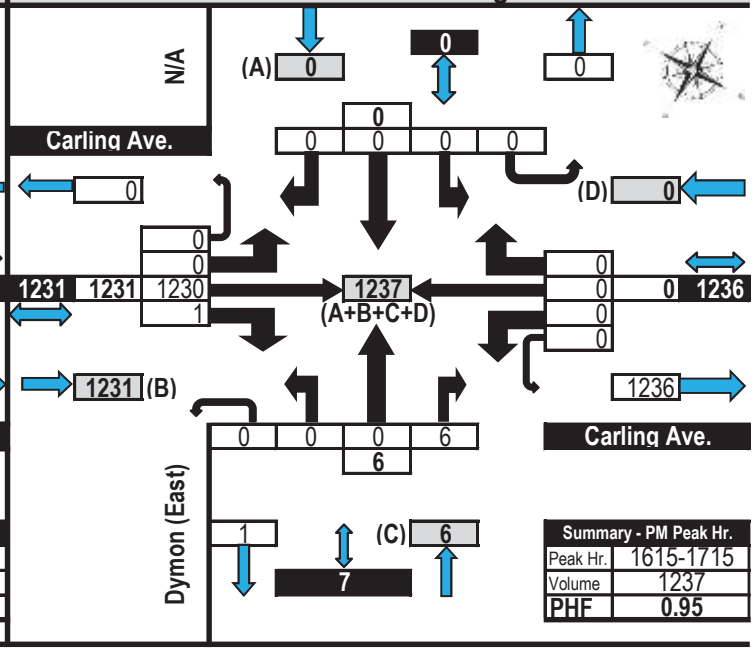

Summary - PM Peak Hr.	
Peak Hr.	1615-1715
Volume	1237
PHF	0.95

Turning Movement Count
Summary, AM and PM Peak Hour Flow Diagrams

Automobiles, Taxis, Light Trucks, Vans, SUV's, Motorcycles, Heavy Trucks, Buses, and School Buses

Carling Avenue & Dymon (1554 Carling Ave.) WEST Access — **Ottawa, ON**

All Vehicles
(Except Bicycles & Electric Scooters)

Tuesday, 14 May 2019
0700-0900 & 1600-1800
4 Hour Survey
City of Ottawa Ward ► 15

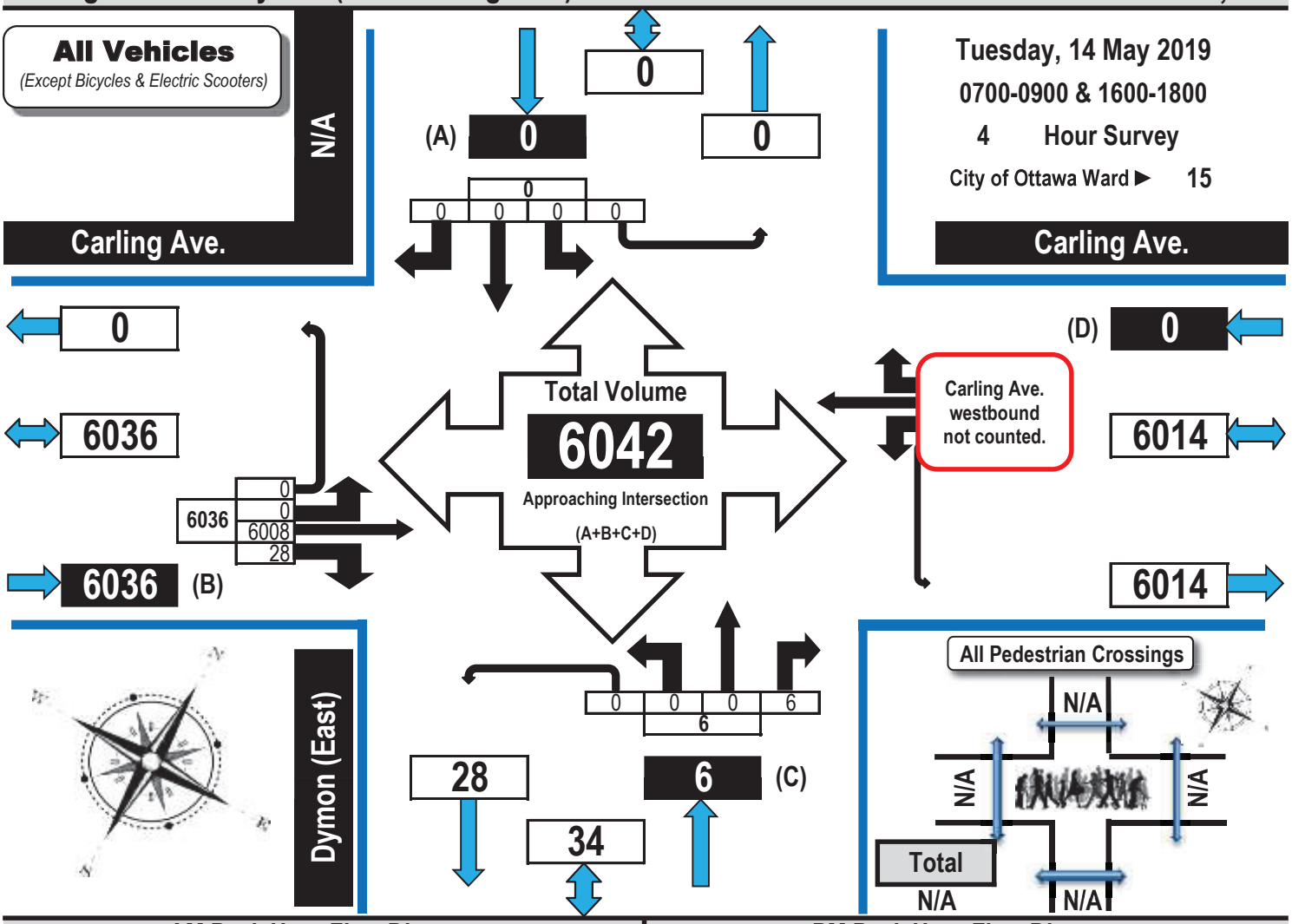

All Pedestrian Crossings

AM Peak Hour Flow Diagram

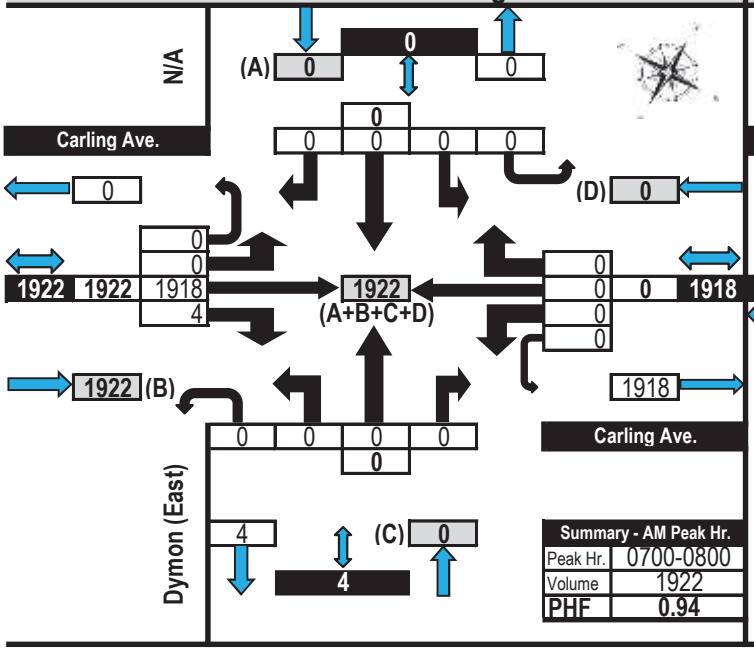

Summary - AM Peak Hr.	
Peak Hr.	0700-0800
Volume	1922
PHF	0.94

PM Peak Hour Flow Diagram

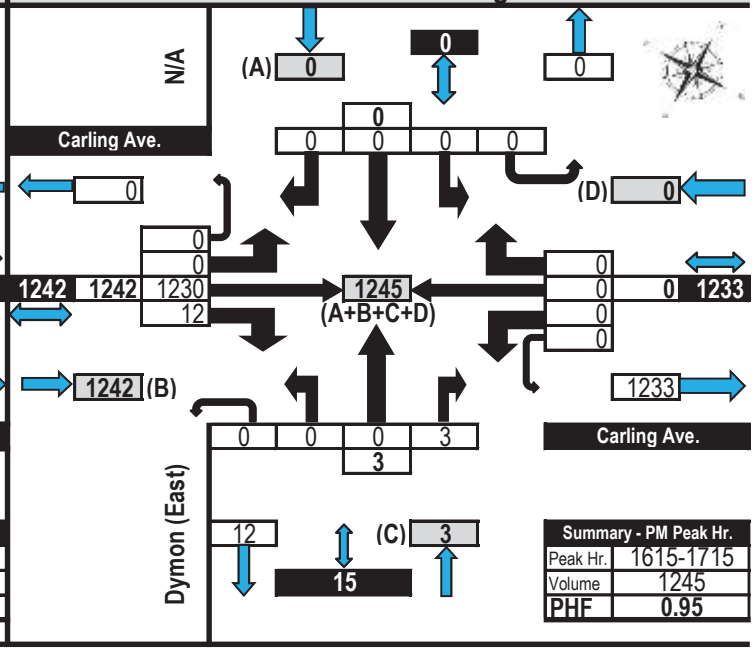

Summary - PM Peak Hr.	
Peak Hr.	1615-1715
Volume	1245
PHF	0.95

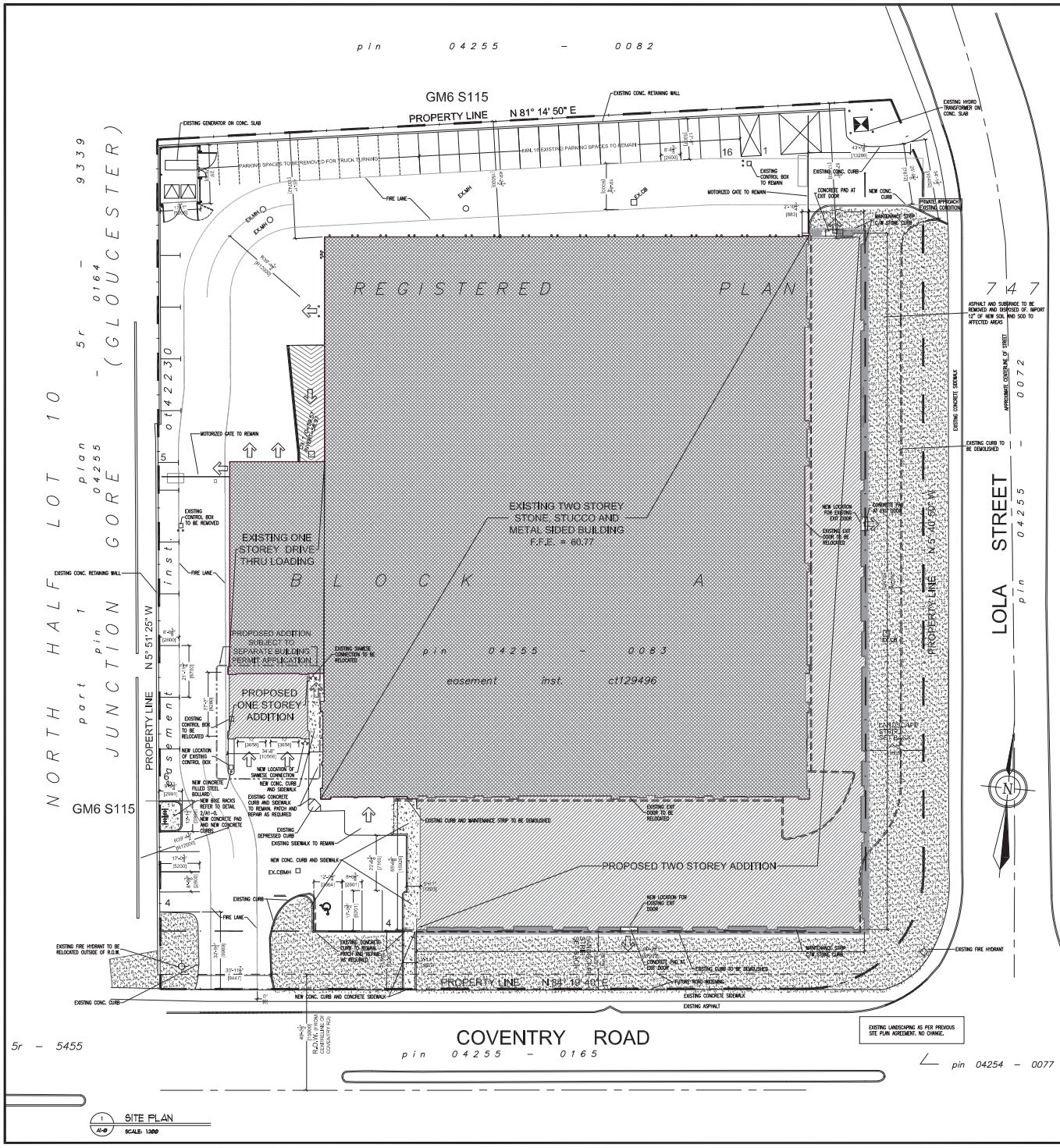

1 SITE PLAN
A1-0 SCALE: 1:300

LEGAL DESCRIPTION OF PROPERTY:

PART OF BLOCK A
REGISTERED PLAN 747
CITY OF OTTAWA

SITE STATISTICS

LOT AREA: 119181.57 SQ.FT. (11072.34 SQ.M.)
EXISTING LOT COVERAGE: 43.9%
PROPOSED LOT COVERAGE: 58.1% (INCLUDING GARAGE ADDITION SUBJECT TO SEPARATE BUILDING PERMIT APPLICATION)

EXISTING BUILDING HEIGHT: 22'-4" (6.81m) TOP OF STEEL
29'-0" (8.84m) TOP OF HIGHEST PARAPET
PROPOSED BUILDING HEIGHT TO MATCH EXISTING

7.5m LANDSCAPED STRIP ALONG COVENTRY ROAD AND LOLA STREET
36 PARKING SPACES PROVIDED

BOUNDARY INFORMATION FROM SURVEY BY: ANNIS, O'SULLIVAN, VOLLEBEKK LTD. JUNE 24, 2008.

BUILDING AREA

EXISTING GROUND FLOOR: 52326.5 SQ.FT. (4861.3 SQ.M.)
EXISTING SECOND FLOOR: 48708.1 SQ.FT. (4525.1 SQ.M.)
TOTAL EXISTING GROSS FLOOR AREA: 101034.6 SQ.FT. (9386.4 SQ.M.)

PROPOSED GROUND FLOOR: 16005.9 SQ.FT. (1487.0 SQ.M.)
PROPOSED SECOND FLOOR: 15902.2 SQ.FT. (1477.4 SQ.M.)
TOTAL PROPOSED GROSS FLOOR AREA: 31908.1 SQ.FT. (2964.4 SQ.M.)

TOTAL GROUND FLOOR AREA: 68332.4 SQ.FT. (6348.3 SQ.M)
TOTAL SECOND FLOOR AREA: 64410.3 SQ.FT. (6002.5 SQ.M)
TOTAL GROSS FLOOR AREA: 132942.7 SQ.FT. (12350.8 SQ.M.)

GROSS FLOOR AREA OF PROPOSED GARAGE ADDITION (SUBJECT TO SEPARATE BUILDING PERMIT APPLICATION): 909.8 SQ.FT. (84.5 SQ.M.)
TOTAL GROSS FLOOR AREA (INCLUDING GFA OF GARAGE ADDITION): 133852.5 SQ.FT. (12435.3 SQ.M.)

GROSS LEASABLE AREA

PROPOSED GROUND FLOOR: 15852.6 SQ.FT. (1472.76 SQ.M.)
PROPOSED SECOND FLOOR: 15852.6 SQ.FT. (1472.76 SQ.M.)
TOTAL PROPOSED GROSS LEASABLE AREA: 31705.2 (2945.5 SQ.M.)

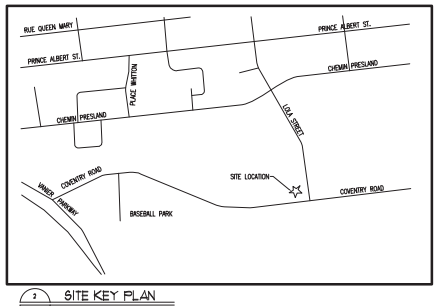

2 SITE KEY PLAN
A1-0 SCALE: N.T.S.

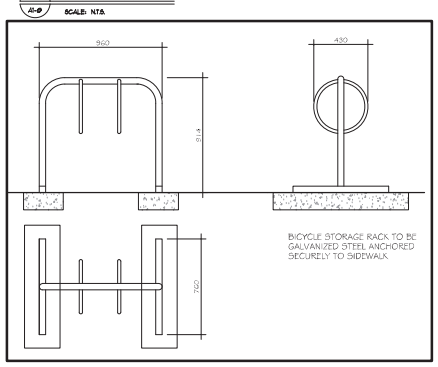

3 BICYCLE STORAGE RACK DETAIL
A1-0 SCALE: N.T.S.

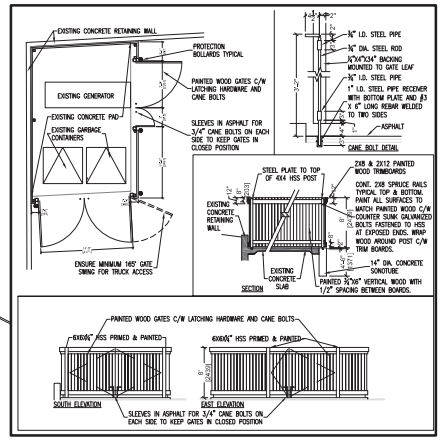

4 GARBAGE ENCLOSURE DETAIL
A1-0 SCALE: N.T.S.

ref	description	date
6	Revised Site Plan	24 Oct. 2012
5	Revised Site Plan Walkway & Bicycle	2 August 2012
4	Revised For Site Plan & Siamese	31 July 2012
3	Revised For Building Permit Application	16 July 2012
2	For Building Permit Application	12 Dec 2011
1	For Internal Review	29 July 2011

revisions

RE-ISSUE FOR SITE PLAN CONTROL

STRUCTURAL ENGINEER
Cleland Jardine Engineering Ltd.
Ryan Minden
200-880 Terry Fox Drive, Kanata ON K2L 4B9
tel: (613) 591-1533 fax: (613) 591-7703
e-mail: mail@clelandjardine.com

MECHANICAL/ELECTRICAL
Goodkey Weedmark Consulting Engineers
Tim Bajkowski, Andre Bogdanovic
1688 Woodward Dr. Ottawa ON K2C 0P9
tel: (613) 727-0111 fax: (613) 727-0115
web: www.gwe.ca e-mail: info@gwe.com

CIVIL SOLICITOR
David Schaeffer Engineering Ltd.
Matt Villegate
120 Iber Road, Suite 203, Ottawa ON K2S 1E9
tel: (613) 836-0856 fax: (613) 836-7183
e-mail: ottawa@DSEL.ca

PLANNER & LANDSCAPE ARCHITECT
FoTenn
Miguel Tremblay
223 McLeod Street, Ottawa ON K2P 0Z8
tel: (613) 730-5709 fax: (613) 730-1136
web: www.FoTenn.com e-mail: tremblay@FoTenn.com

owner:

DYMON SELF STORAGE

architect
nicholas caragianis architect inc.
31 Perry's Bridge, Ottawa, ON K1S 3H9
t: 613 98 6800
f: 613 98 2989
e: info@nicarch.ca
www.nicarch.ca

project & location
RENOVATION & ADDITION TO:
DYMON SELF-STORAGE
323 COVENTRY ROAD, OTTAWA

title of drawing
SITE PLAN
& WIDENING ROAD

scale: AS NOTED
date: 2012/08/02
drawn by: KL CT
drawing: A1-0

Turning Movement Count
Summary, AM and PM Peak Hour Flow Diagrams

Automobiles, Taxis, Light Trucks, Vans, SUV's, Motorcycles, Heavy Trucks, Buses, and School Buses

Coventry Road & Dymon Storage (343 Coventry Road) — Ottawa, ON

All Vehicles
(Except Bicycles & Electric Scooters)

Wednesday, 15 May 2019
0700-0900 & 1600-1800
4 Hour Survey
City of Ottawa Ward ► 13

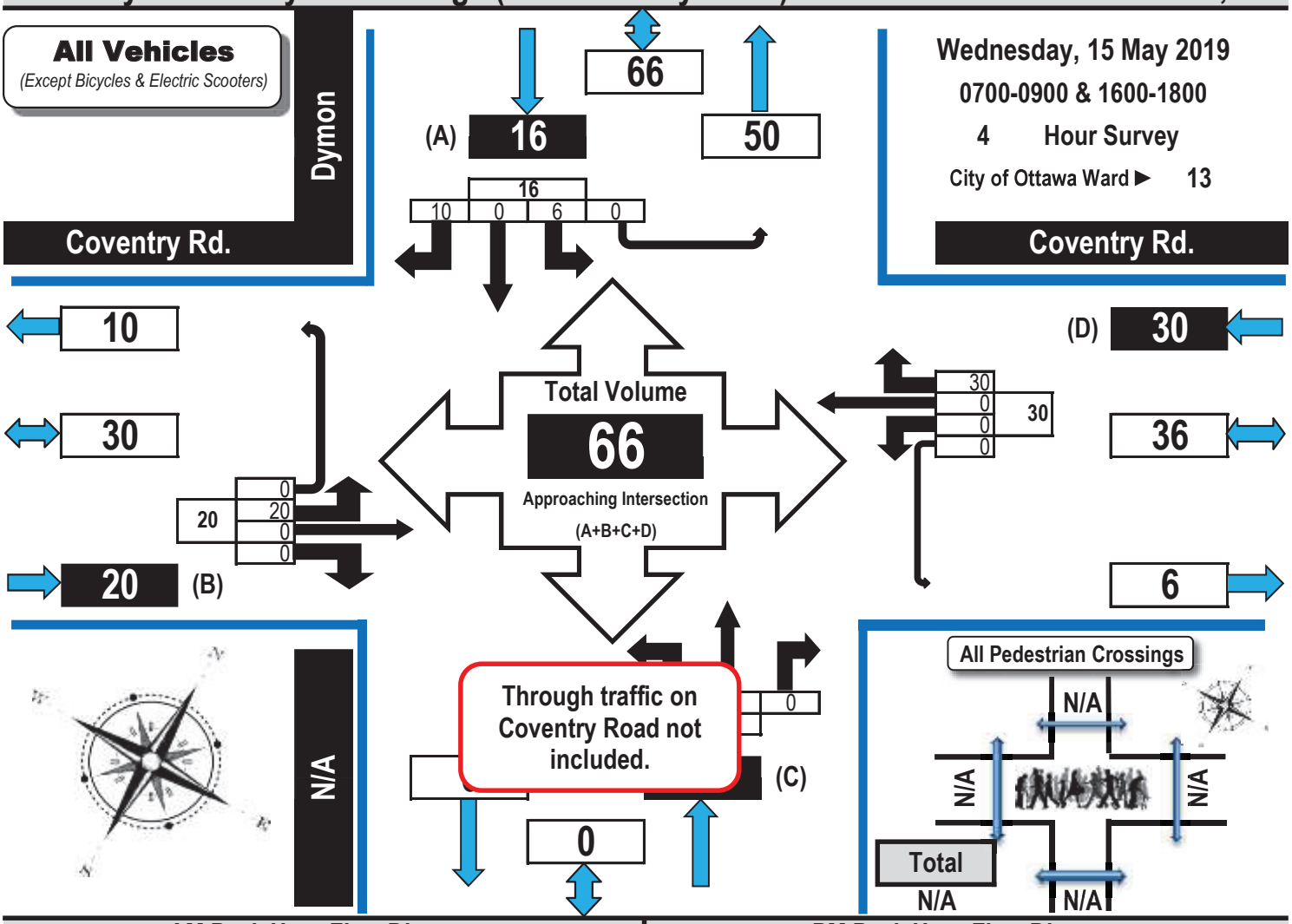

AM Peak Hour Flow Diagram

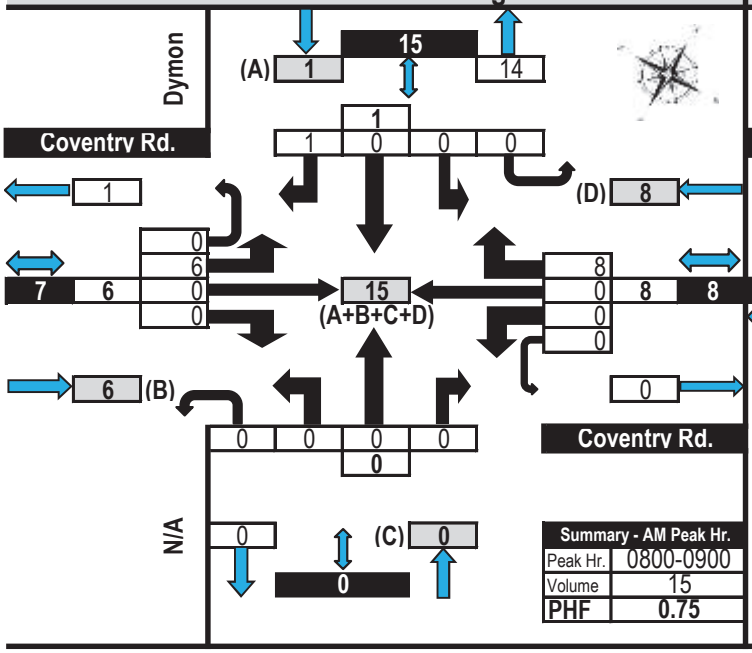

Summary - AM Peak Hr.	
Peak Hr.	0800-0900
Volume	15
PHF	0.75

PM Peak Hour Flow Diagram

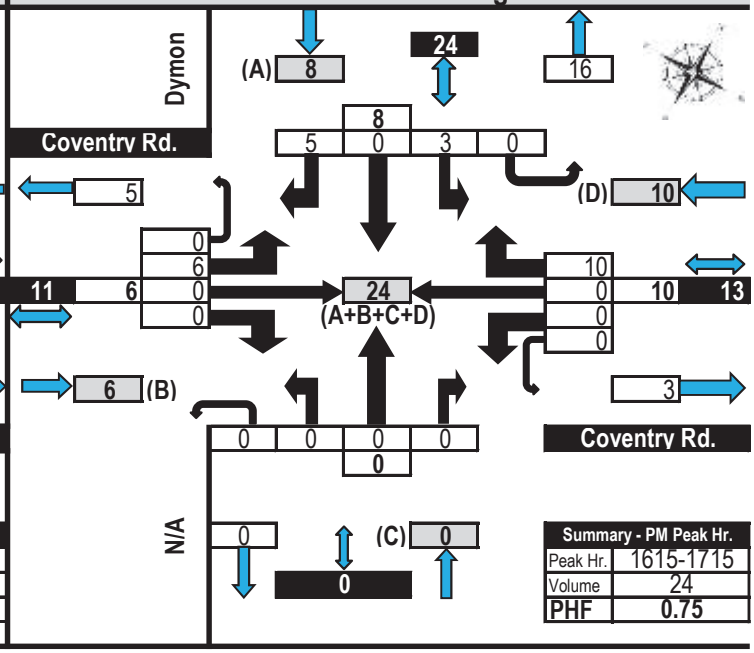

Summary - PM Peak Hr.	
Peak Hr.	1615-1715
Volume	24
PHF	0.75

Turning Movement Count
Summary, AM and PM Peak Hour Flow Diagrams

Automobiles, Taxis, Light Trucks, Vans, SUV's, Motorcycles, Heavy Trucks, Buses, and School Buses

Lola Street & Dymon Storage (343 Coventry Road) — Ottawa, ON

All Vehicles
(Except Bicycles & Electric Scooters)

Wednesday, 15 May 2019
0700-0900 & 1600-1800
4 Hour Survey
City of Ottawa Ward ► 13

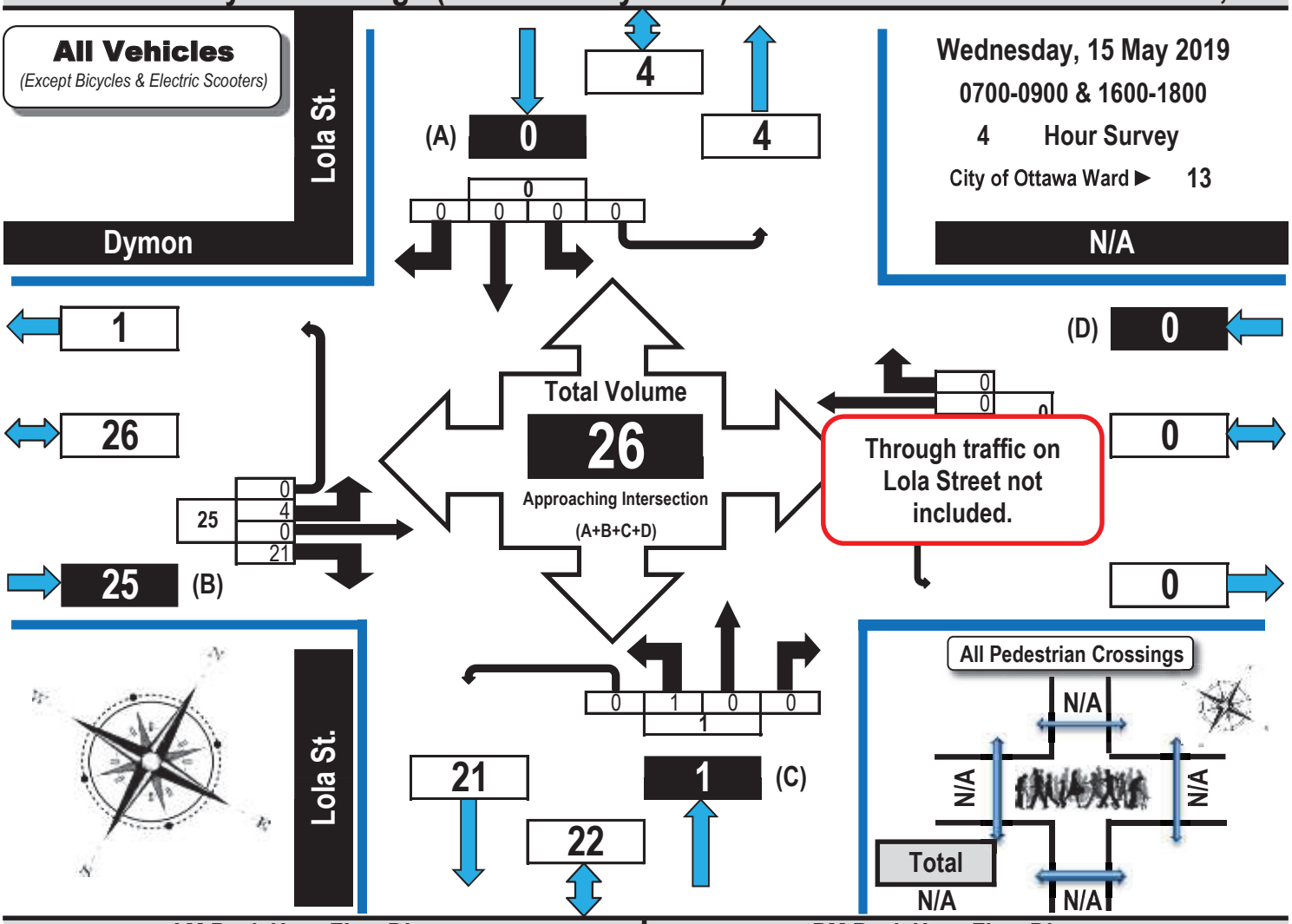

AM Peak Hour Flow Diagram

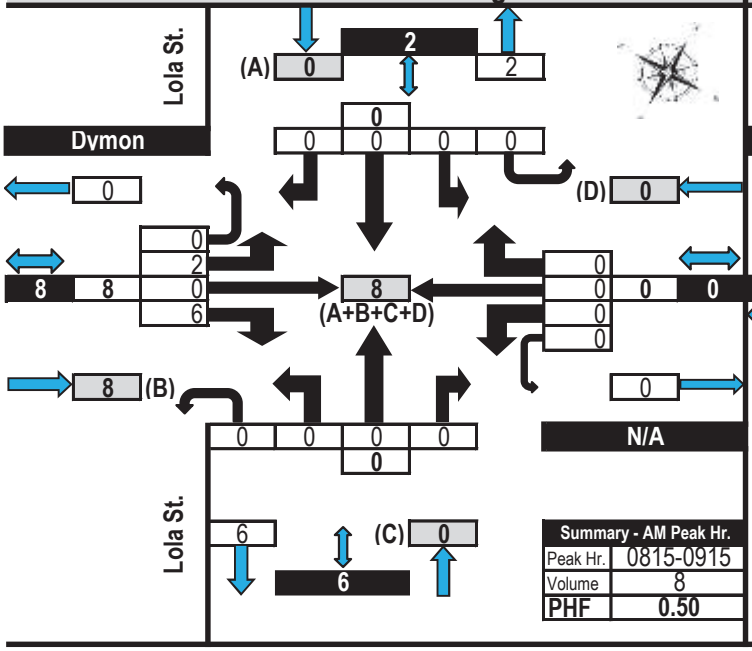

Summary - AM Peak Hr.	
Peak Hr.	0815-0915
Volume	8
PHF	0.50

PM Peak Hour Flow Diagram

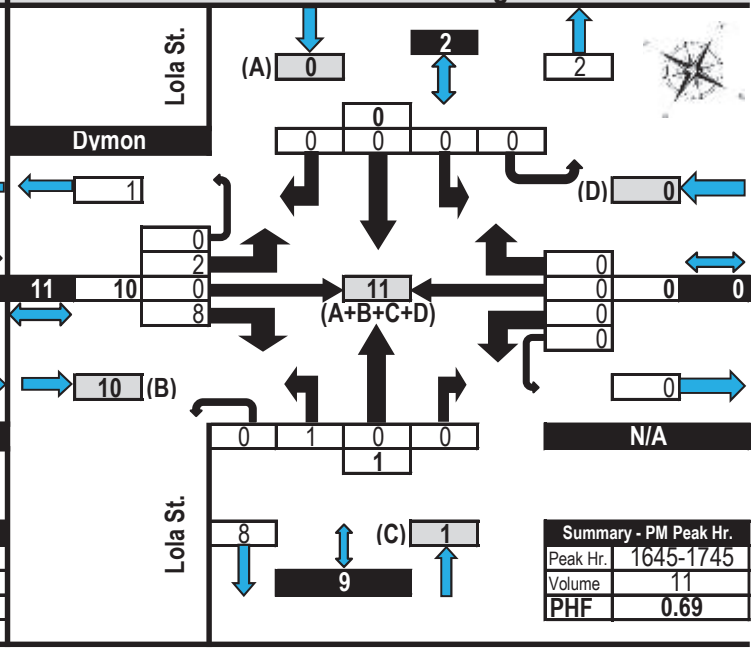

Summary - PM Peak Hr.	
Peak Hr.	1645-1745
Volume	11
PHF	0.69

Turning Movement Count
Summary, AM and PM Peak Hour Flow Diagrams

Automobiles, Taxis, Light Trucks, Vans, SUV's, Motorcycles, Heavy Trucks, Buses, and School Buses

Coventry Road & Dymon Storage (343 Coventry Road) — Ottawa, ON

All Vehicles
(Except Bicycles & Electric Scooters)

Monday, 10 June 2019
0700-0900 & 1600-1800
4 Hour Survey
City of Ottawa Ward ► 13

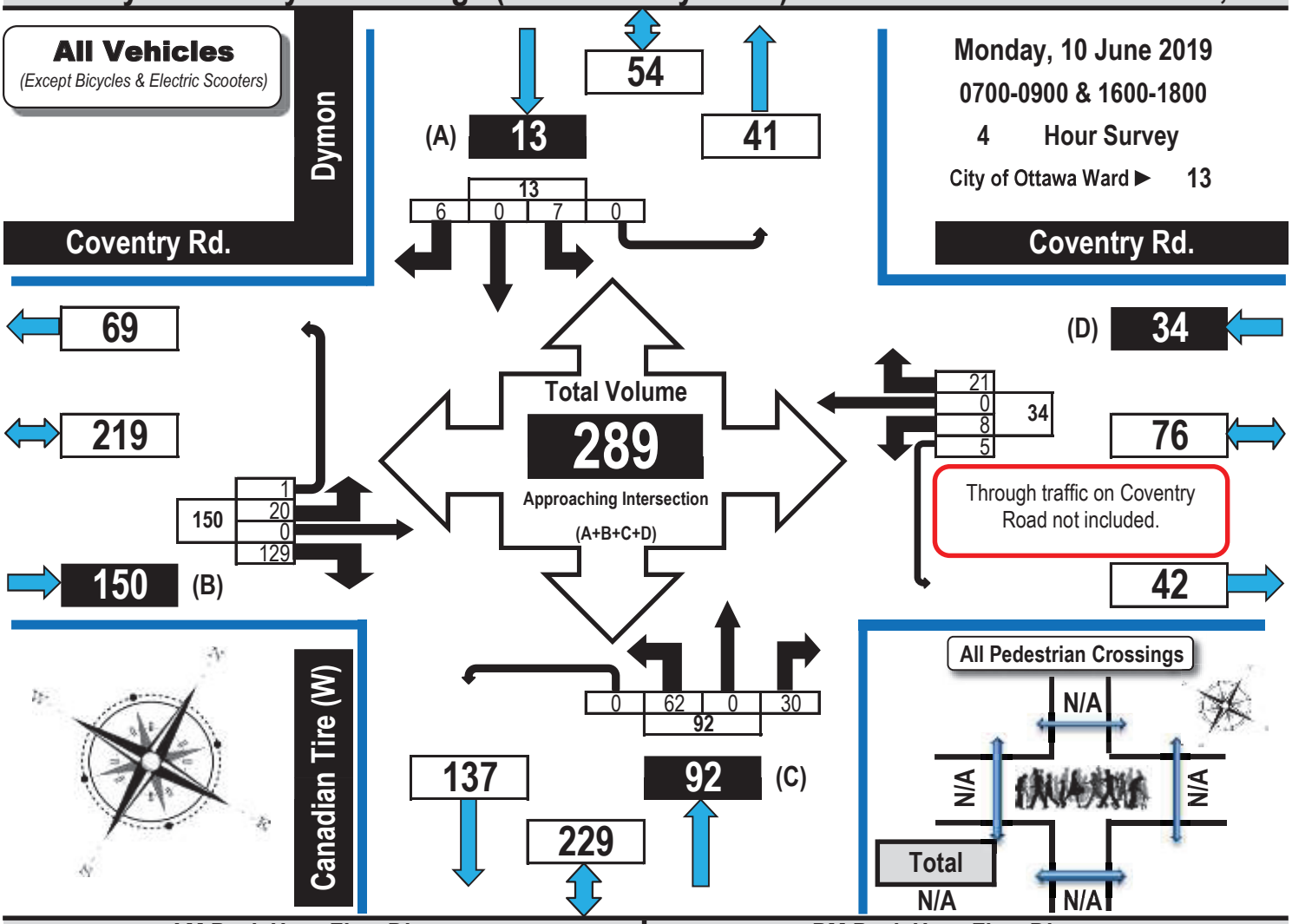

AM Peak Hour Flow Diagram

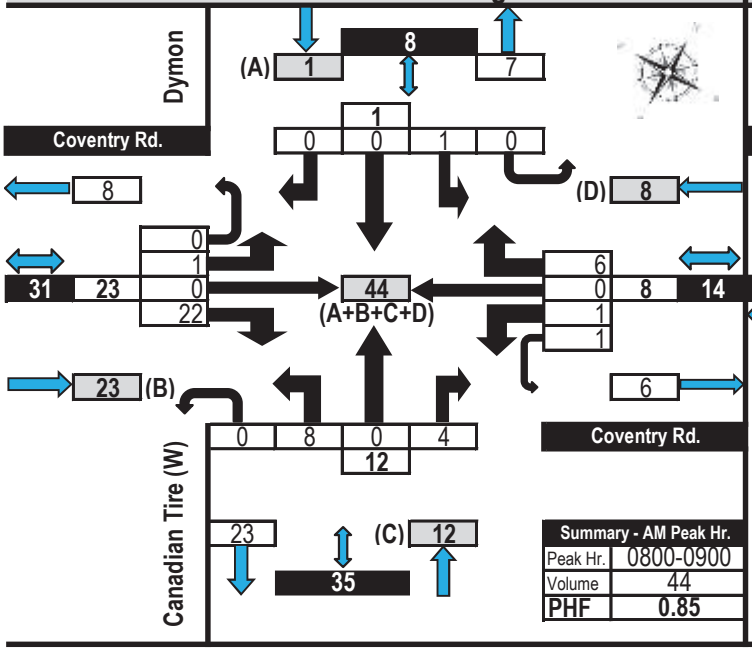

Summary - AM Peak Hr.	
Peak Hr.	0800-0900
Volume	44
PHF	0.85

PM Peak Hour Flow Diagram

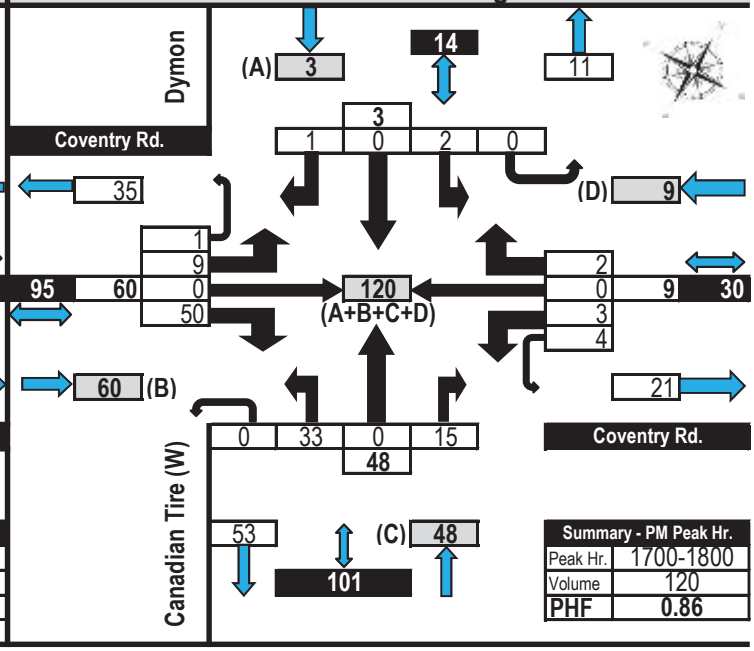

Summary - PM Peak Hr.	
Peak Hr.	1700-1800
Volume	120
PHF	0.86

Turning Movement Count
Summary, AM and PM Peak Hour Flow Diagrams

Automobiles, Taxis, Light Trucks, Vans, SUV's, Motorcycles, Heavy Trucks, Buses, and School Buses

Lola Street & Dymon Storage (343 Coventry Road) — Ottawa, ON

All Vehicles
(Except Bicycles & Electric Scooters)

Monday, 10 June 2019
0700-0900 & 1600-1800
4 Hour Survey
City of Ottawa Ward ► 13

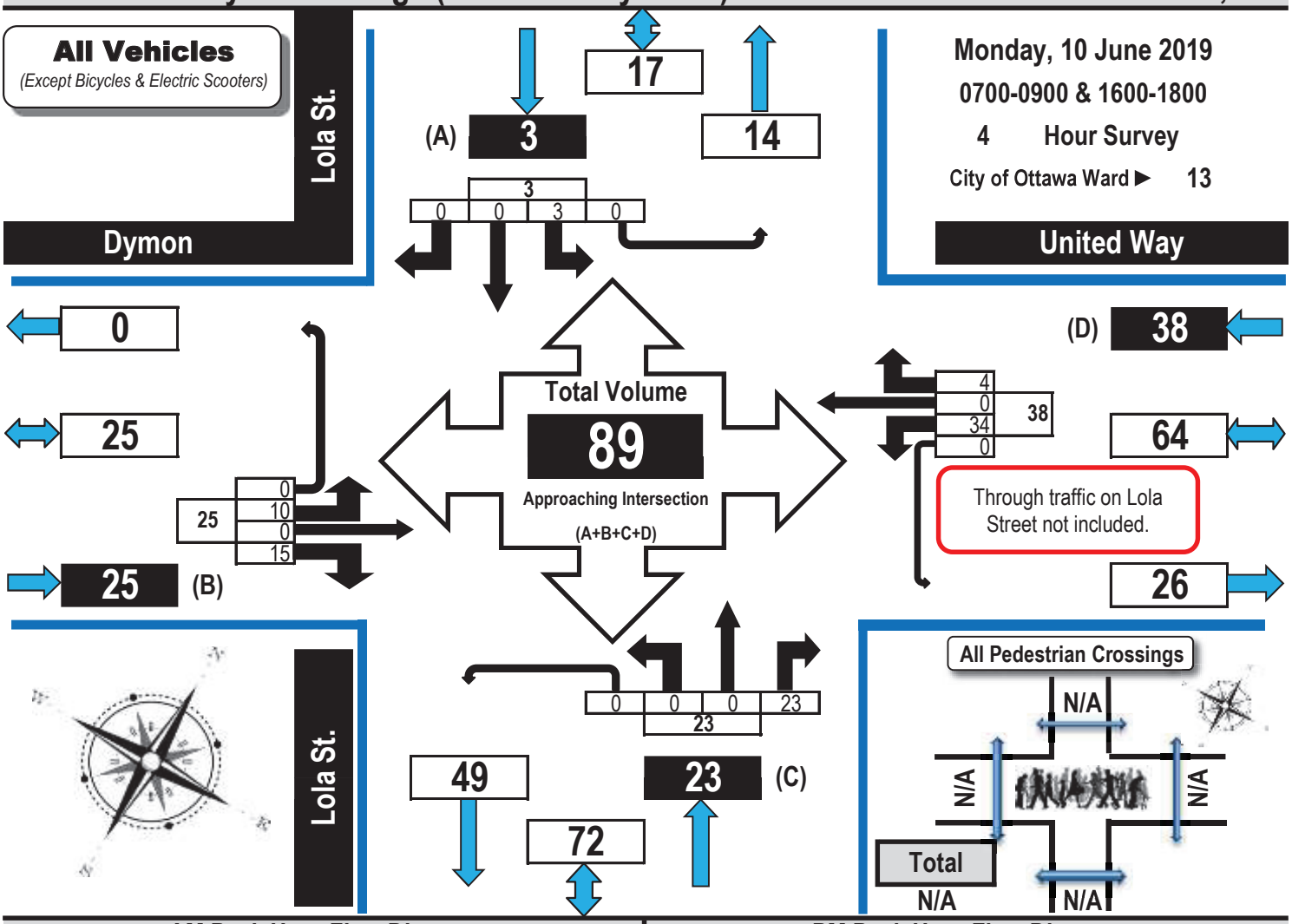

AM Peak Hour Flow Diagram

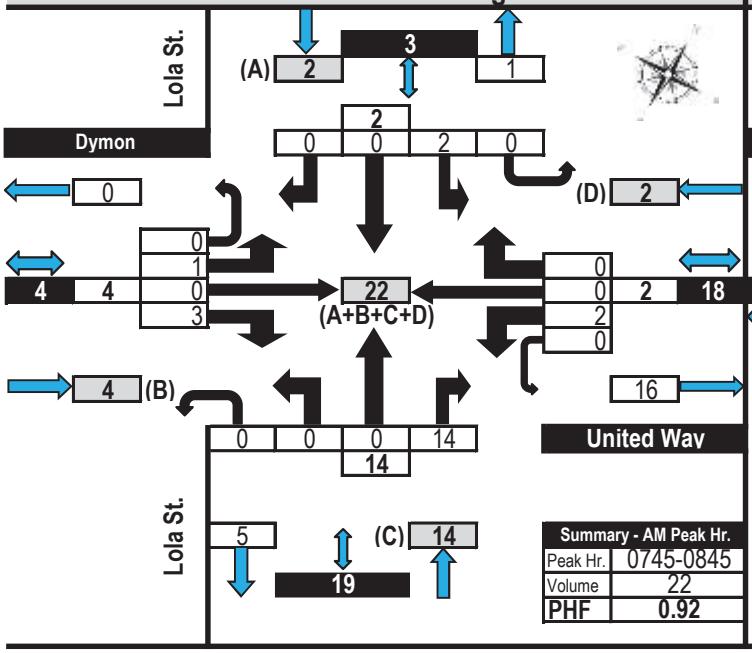

Summary - AM Peak Hr.	
Peak Hr.	0745-0845
Volume	22
PHF	0.92

PM Peak Hour Flow Diagram

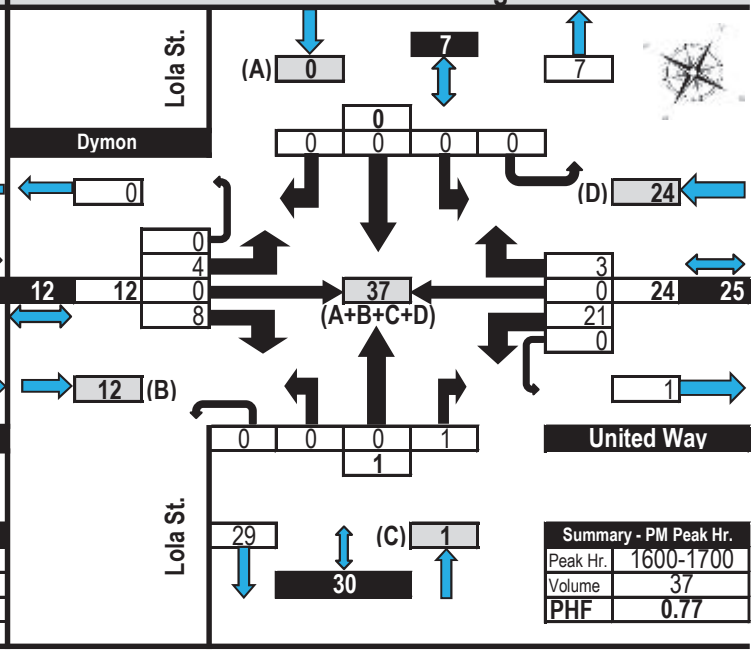

Summary - PM Peak Hr.	
Peak Hr.	1600-1700
Volume	37
PHF	0.77

Turning Movement Count
Summary, OFF and PM Peak Hour Flow Diagrams

Automobiles, Taxis, Light Trucks, Vans, SUV's, Motorcycles, Heavy Trucks, Buses, and School Buses

Coventry Road & Dymon Storage (343 Coventry Road) — Ottawa, ON

All Vehicles
(Except Bicycles & Electric Scooters)

Saturday, 8 June 2019
1100 - 1600
5 Hour Survey
City of Ottawa Ward ► 13

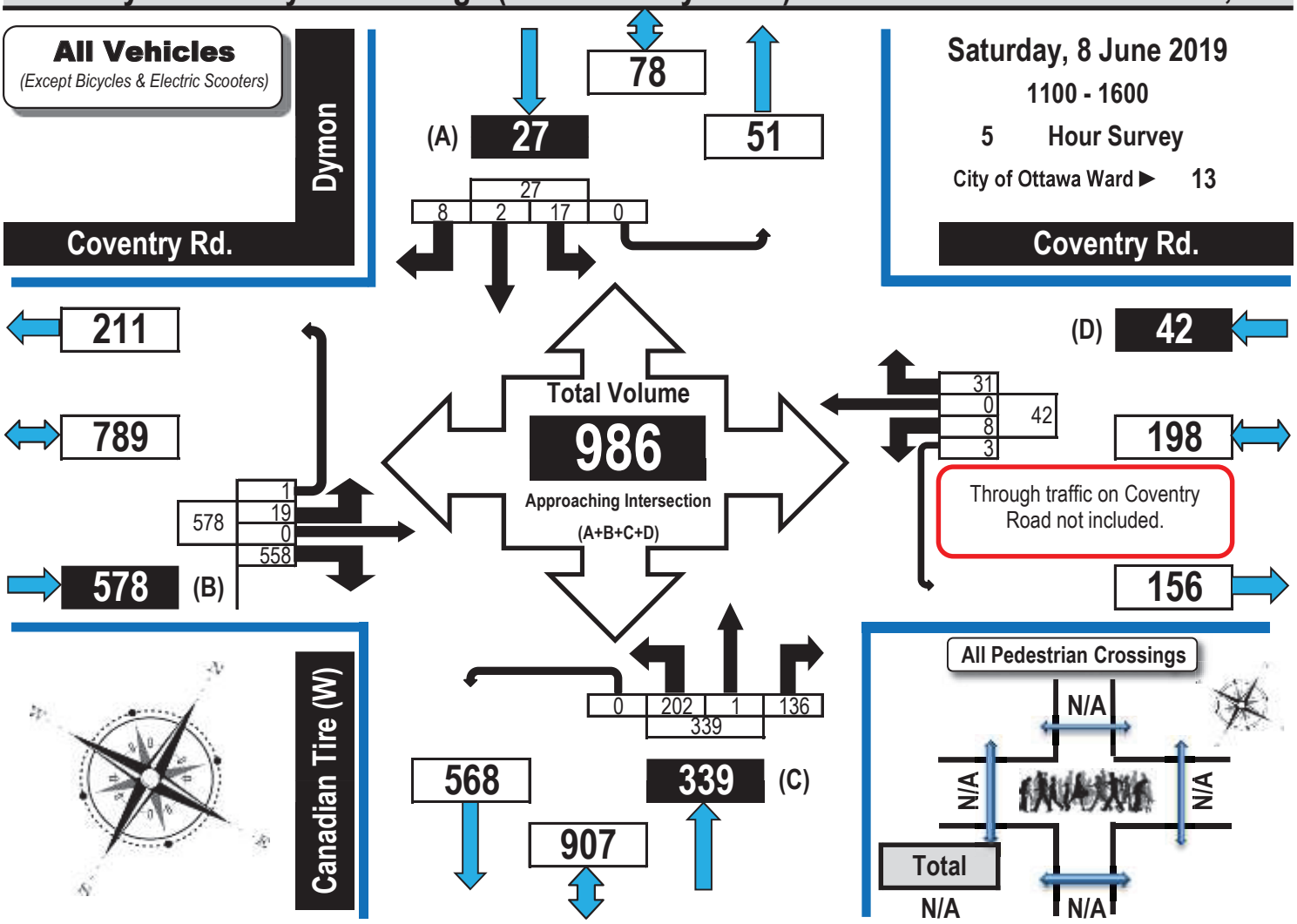

All Pedestrian Crossings

N/A	
N/A	N/A
Total	N/A

Off Peak Hour Flow Diagram

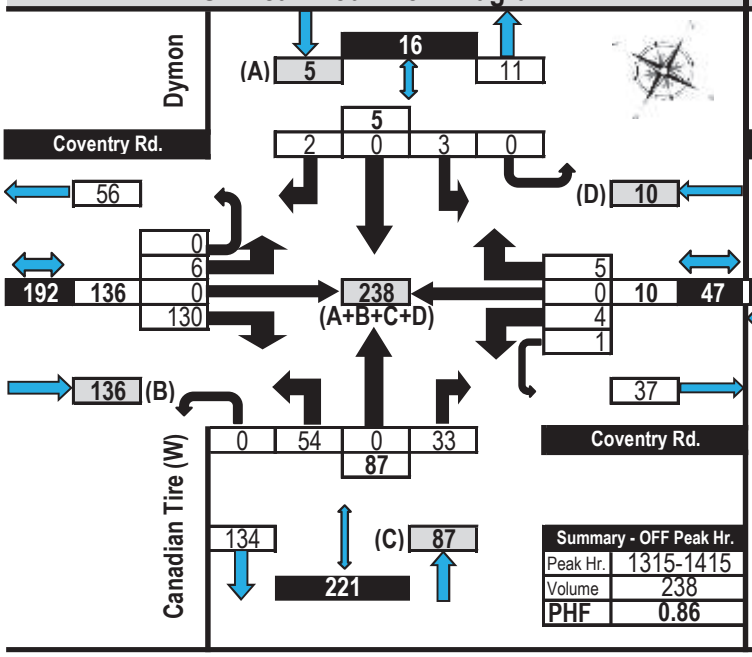

Summary - OFF Peak Hr.	
Peak Hr.	1315-1415
Volume	238
PHF	0.86

PM Peak Hour Flow Diagram

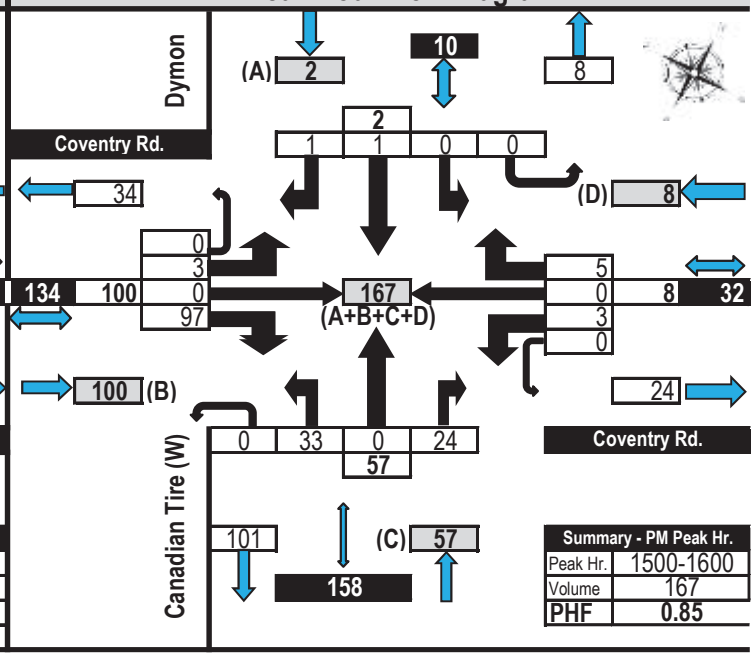

Summary - PM Peak Hr.	
Peak Hr.	1500-1600
Volume	167
PHF	0.85

Turning Movement Count
Summary, AM and PM Peak Hour Flow Diagrams

Automobiles, Taxis, Light Trucks, Vans, SUV's, Motorcycles, Heavy Trucks, Buses, and School Buses

Lola Street & Dymon Storage (343 Coventry Road) — Ottawa, ON

All Vehicles
(Except Bicycles & Electric Scooters)

Monday, 10 June 2019
0700-0900 & 1600-1800
4 Hour Survey
City of Ottawa Ward ► 13

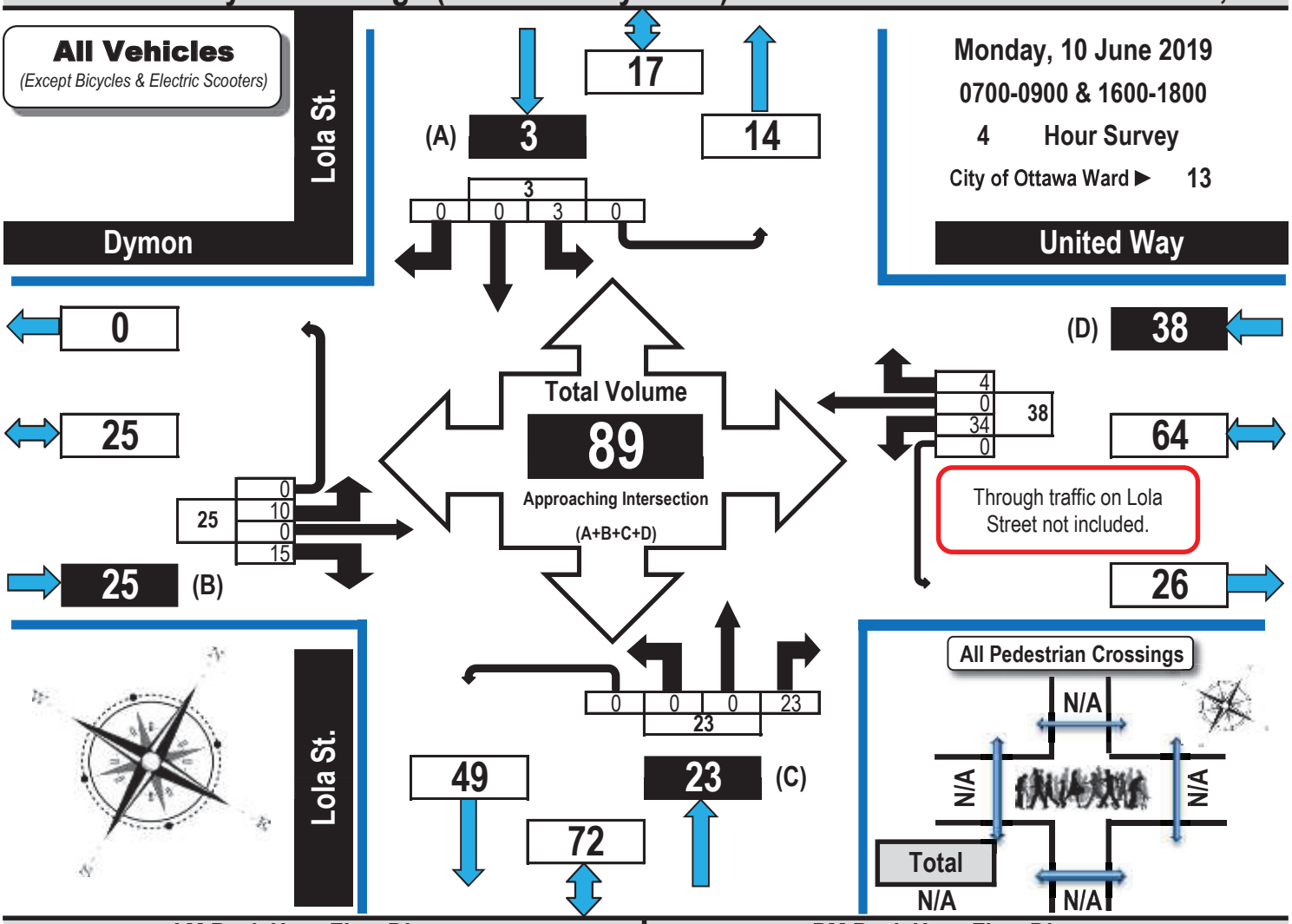

AM Peak Hour Flow Diagram

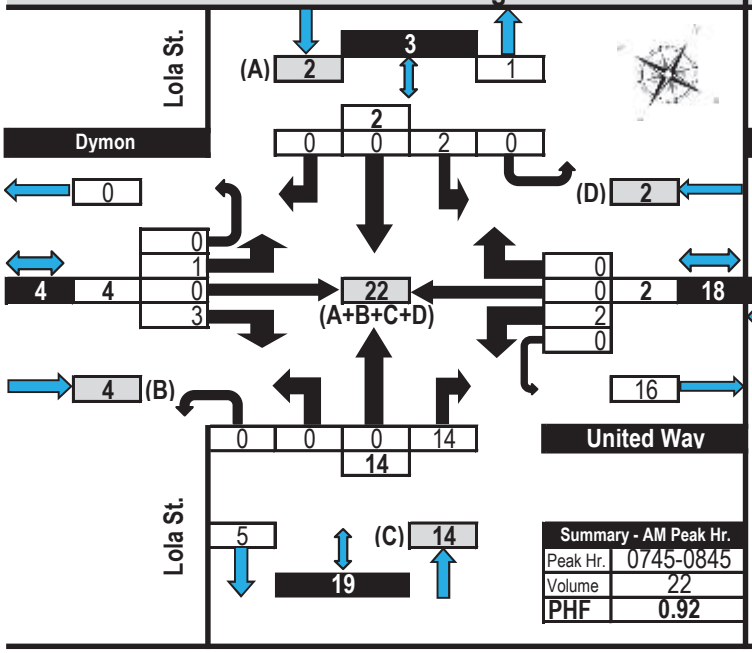

Summary - AM Peak Hr.	
Peak Hr.	0745-0845
Volume	22
PHF	0.92

PM Peak Hour Flow Diagram

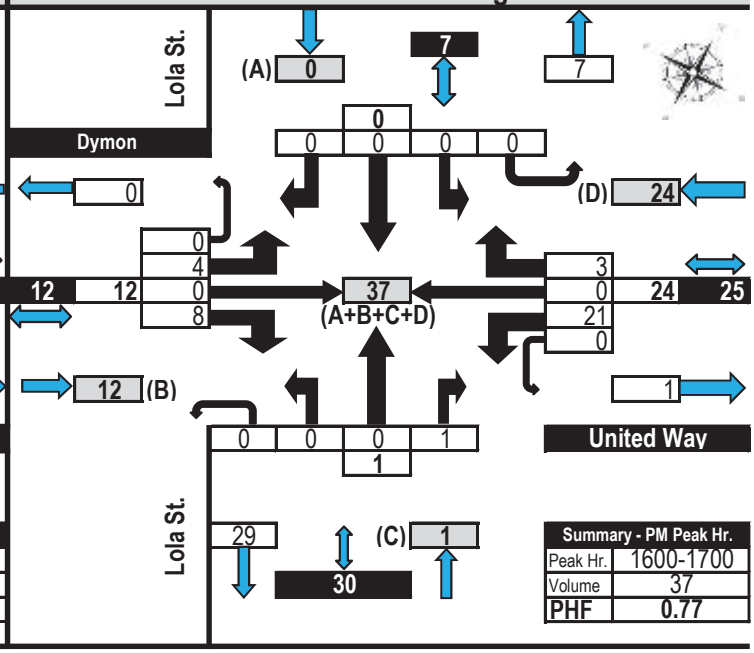

Summary - PM Peak Hr.	
Peak Hr.	1600-1700
Volume	37
PHF	0.77

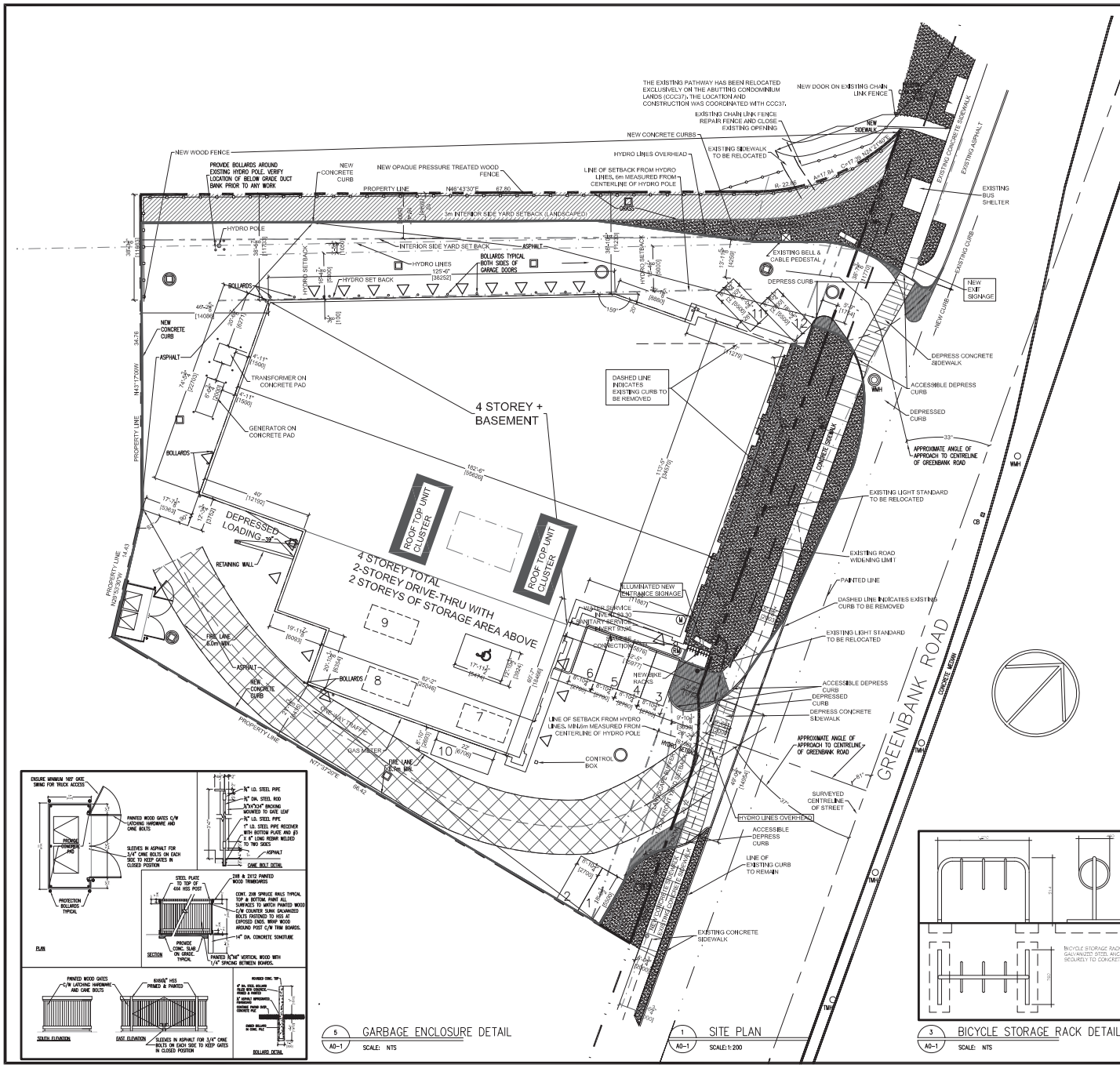

1 SITE PLAN
A0-1 SCALE: 1:200

5 GARBAGE ENCLOSURE DETAIL
A0-1 SCALE: NTS

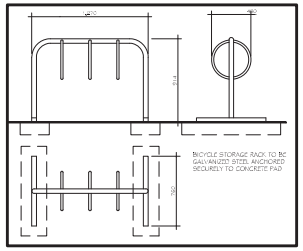

3 BICYCLE STORAGE RACK DETAIL
A0-1 SCALE: NTS

LEGAL DESCRIPTION OF PROPERTY:

PART OF BLOCKS "C" & "N3"
REGISTERED PLAN 627624
AND PART OF THE ROAD ALLOWANCE BETWEEN LOTS 30 & 31 (AS CLOSED)
CONCESSION 3 (RIDEAU FRONT)
GEOGRAPHIC TOWNSHIP OF NEPEAN
NOW CITY OF OTTAWA

SITE STATISTICS

LOT AREA 4,738.5m²
LOT WIDTH 94.1m (308'-10½")
PARKING REQUIRED :9 SPACES
4 PARKING SPACES + 5 IN DRIVE-THRU PROVIDED

ZONING INFORMATION
ZONE GM15[1672]H(17.5)

	REQUIRED	PROVIDED
MIN. FRONT YARD	1.75 m	3.78
CORNER YARD SETBACK	3.0 m	3.0m
MIN. INTERIOR SIDE YARD SETBACK:		
ABUTTING A RESIDENTIAL ZONE	5.0 m	11.0m
OTHER CASES	NO MIN.	—
MIN. REAR YARD SETBACK:		
ABUTTING A RESIDENTIAL ZONE	7.5 m	N/A.
OTHER CASES	NO MIN.	6.15m
MAX. BUILDING HEIGHT	17.5 m	17.3m (56'-7½") T.O. HIGH PARAPET 15.0m (49'-2") T.O. STEEL
MAX. FLOOR SPACE INDEX:	2.15	2.146
MIN. WIDTH OF LANDSCAPED AREA:		
ABUTTING A STREET	3.0 m	3.0m
ABUTTING A RESIDENTIAL ZONE	3.0 m	3.0m (10'-0")
OTHER CASES	NO MIN.	

BOUNDARY INFORMATION FROM SURVEY BY: FAIRHALL, MOFFATT & WOODLAND LIMITED, ONTARIO LAND SURVEYORS. 26 NOVEMBER 2009.

BUILDING AREA (FOOTPRINT)
2,211.7 m² (23,806.97 SQF)

GROSS FLOOR AREA AS PER CITY OF OTTAWA DEFINITION)

BASEMENT	1 633.2 m²	(17,580 sqf)
GROUND	1 257 m²	(13,531 sqf)+ OFFICE 415m² (4,466.7 sqf) TOTAL 1 672 m²(17,997.7 SQF)
SECOND	1 731.6 m²	(18,638.7 sqf)
THIRD	2 079 m²	(22,379 sqf)
FOURTH	2 079 m²	(22,379 sqf)
TOTAL GFA	9 194.8 m²	(98,972.8 sqf)

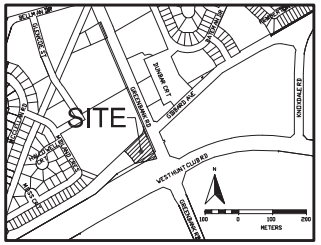

2 SITE KEY PLAN
A0-1 SCALE: NTS

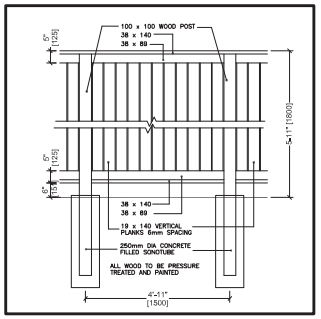

4 WOOD FENCE DETAIL
A0-1 SCALE: NTS

1. Contractor must verify all job dimensions, all drawings, details, specifications and report any discrepancies to owners before proceeding with work.
2. All drawings and specifications are instruments of service and the property of the architects which must be returned at the completion of the work, and may not be reproduced without their written permission.

ref	description	date
25	FOR TENDER	2015 07 03
24	BUILDING PERMIT	2015 05 12
23	ELEVATIONS	2015 03 25
22	FOR COORDINATION	2015 03 20
21	NEW LAYOUT	2015 03 06
20	CHANGED AREAS	2014 04 17
19	CHANGED AREAS	2014 01 15
18	REISSUED FOR BUILDING PERMIT	2013 06 02
17	FINAL SITE PLAN CONTROL	2013 03 14
16	FOR FINAL COORDINATION	2013 02 20
15	BUILDING PERMIT	2013 01 18
14	REISSUE FOR SITE PLAN CONTROL	2013 01 07
13	PLANS FOR JANUS LAYOUT	2012 11 28
12	PLANS FOR COORDINATION	2012 11 27
11	COORDINATION FTP	2012 10 02
10	SENT TO CLIENT	2012 09 12
9	UPDATE ELEV. TOP PARAPET	2012 08 24
8	UPDATE ELEV. + FLOOR PLANS	2012 07 26
7	UPDATE ELEVATIONS	2012 07 25
6	UPDATE GROUND FLOOR	2012 07 16
5	SEND TO LAYOUT	2012 07 09
4	EXTENDED LOADING DOCK	2012 07 06
3	SENT FOR APPROVAL	2012 06 27
2	SENT TO CLIENT	2012 06 11
1	SITE PLAN CONTROL	2012 02 13

revisions

2015 08 06
- SHOWING EXTERIOR DOORS ON NORTH ELEVATION
ISSUED FOR REVIEW

STRUCTURAL ENGINEER
Cleland Jardine Engineering Ltd.
Ryan Munden
200-580 Terry Fox Drive, Kanata ON K2L 4B9
tel: (613) 591-1533 fax: (613) 591-1703
e-mail: mail@clelandjardine.com

MECHANICAL/ELECTRICAL
Goodkey Weedmark Consulting Engineers
Tim Belokourov, Andre Bogdanowicz
1688 Woodward Dr, Ottawa ON K2C 0P9
tel: (613) 727-5111 fax: (613) 727-5115
web: www.gwgl.com e-mail: info@gwgl.com

CIVIL ENGINEER
David Schaeffer Engineering Ltd.
Matt Mingale
120 Iber Road, Suite 203, Ottawa ON K2S 1E9
tel: (613) 836-0856 fax: (613) 836-7183
e-mail: ottawa@DSEL.ca

PLANNING & URBAN DESIGN
FoTenn
Miguel Tremblay
223 McLeod Street, Ottawa ON K2P 0Z8
tel: (613) 730-5709 fax: (613) 730-1136
web: www.FoTenn.com e-mail: tremblay@FoTenn.com

owner:
Dymon Capital Corporation
2-1830 Walkley Road
Ottawa ON K1H 8K3
tel: 613-247-0888 fax: 613-247-7730

architect
nicholas caragianis architect inc
137 Parris Street,
Ottawa, ON, K1R 5K9
t: 613 921 6801
f: 613 921 8889
e: info@nicarch.ca
www.nicarch.ca

NORTH

project & location
DYMON SELF-STORAGE
300 GREENBANK ROAD
OTTAWA, ONT.

title of drawing
SITE PLAN

scale: AS NOTED
date: 2015/07/29
drawn by: KS CT
drawing: A0-1

Turning Movement Count
Summary, AM and PM Peak Hour Flow Diagrams

Automobiles, Taxis, Light Trucks, Vans, SUV's, Motorcycles, Heavy Trucks, Buses, and School Buses

Greenbank Road & Dymon Storage NORTH (300 Greenbank Road) — **Nepean, ON**

All Vehicles
(Except Bicycles & Electric Scooters)

Monday, 10 June 2019
0700-0900 & 1600-1800
4 Hour Survey
City of Ottawa Ward ► 9

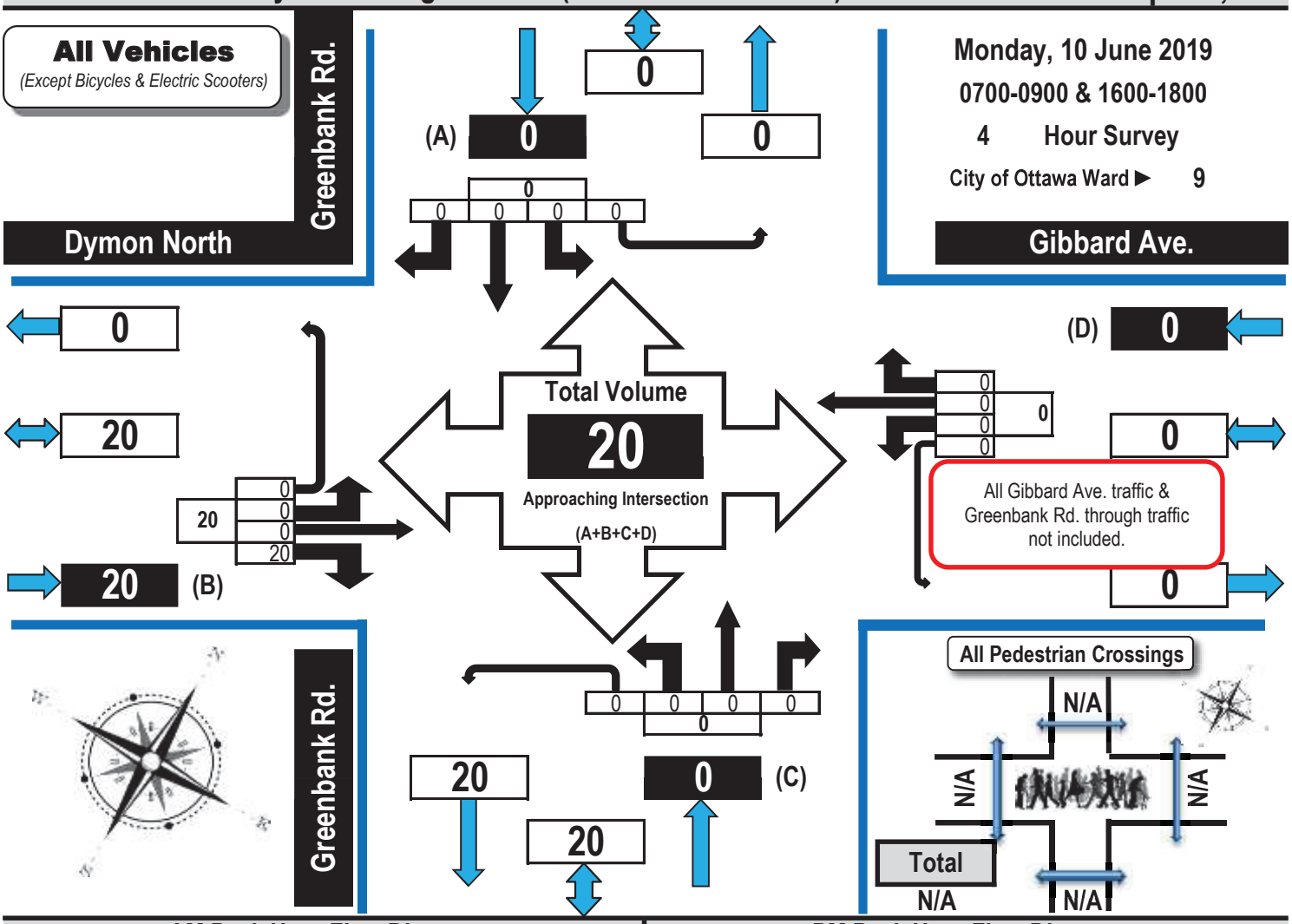

All Pedestrian Crossings

N/A	
N/A	N/A
Total	N/A
N/A	

AM Peak Hour Flow Diagram

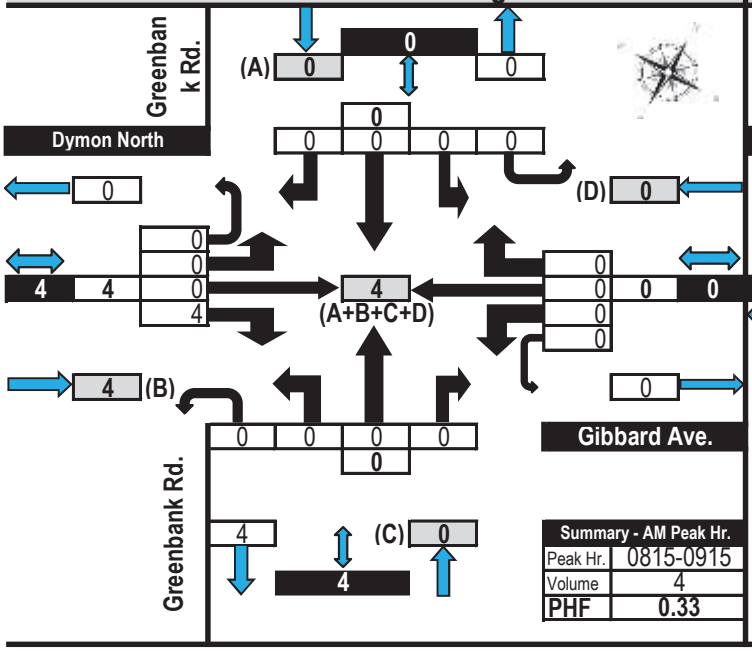

Summary - AM Peak Hr.	
Peak Hr.	0815-0915
Volume	4
PHF	0.33

PM Peak Hour Flow Diagram

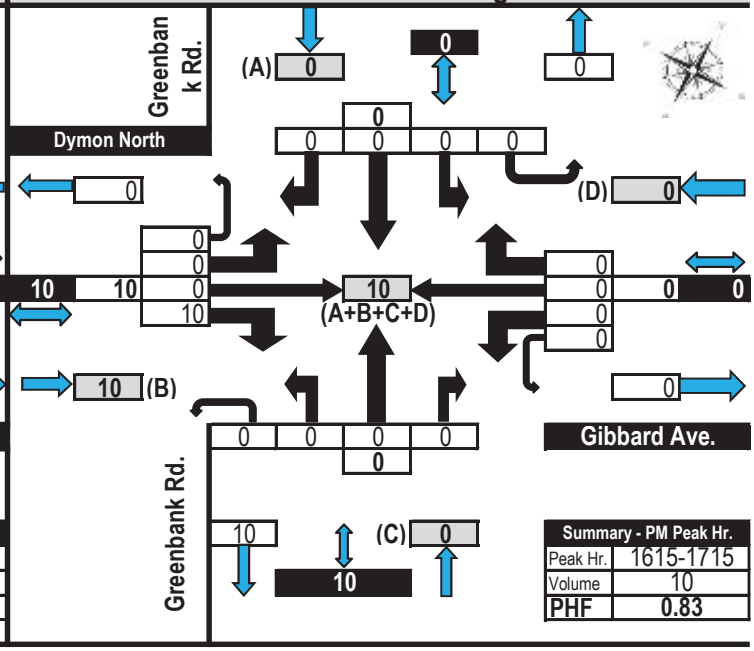

Summary - PM Peak Hr.	
Peak Hr.	1615-1715
Volume	10
PHF	0.83

Turning Movement Count
Summary, AM and PM Peak Hour Flow Diagrams

Automobiles, Taxis, Light Trucks, Vans, SUV's, Motorcycles, Heavy Trucks, Buses, and School Buses

Greenbank Road & Dymon Storage SOUTH (300 Greenbank Road) — **Nepean, ON**

All Vehicles
(Except Bicycles & Electric Scooters)

Monday, 10 June 2019
0700-0900 & 1600-1800
4 Hour Survey
City of Ottawa Ward ► 9

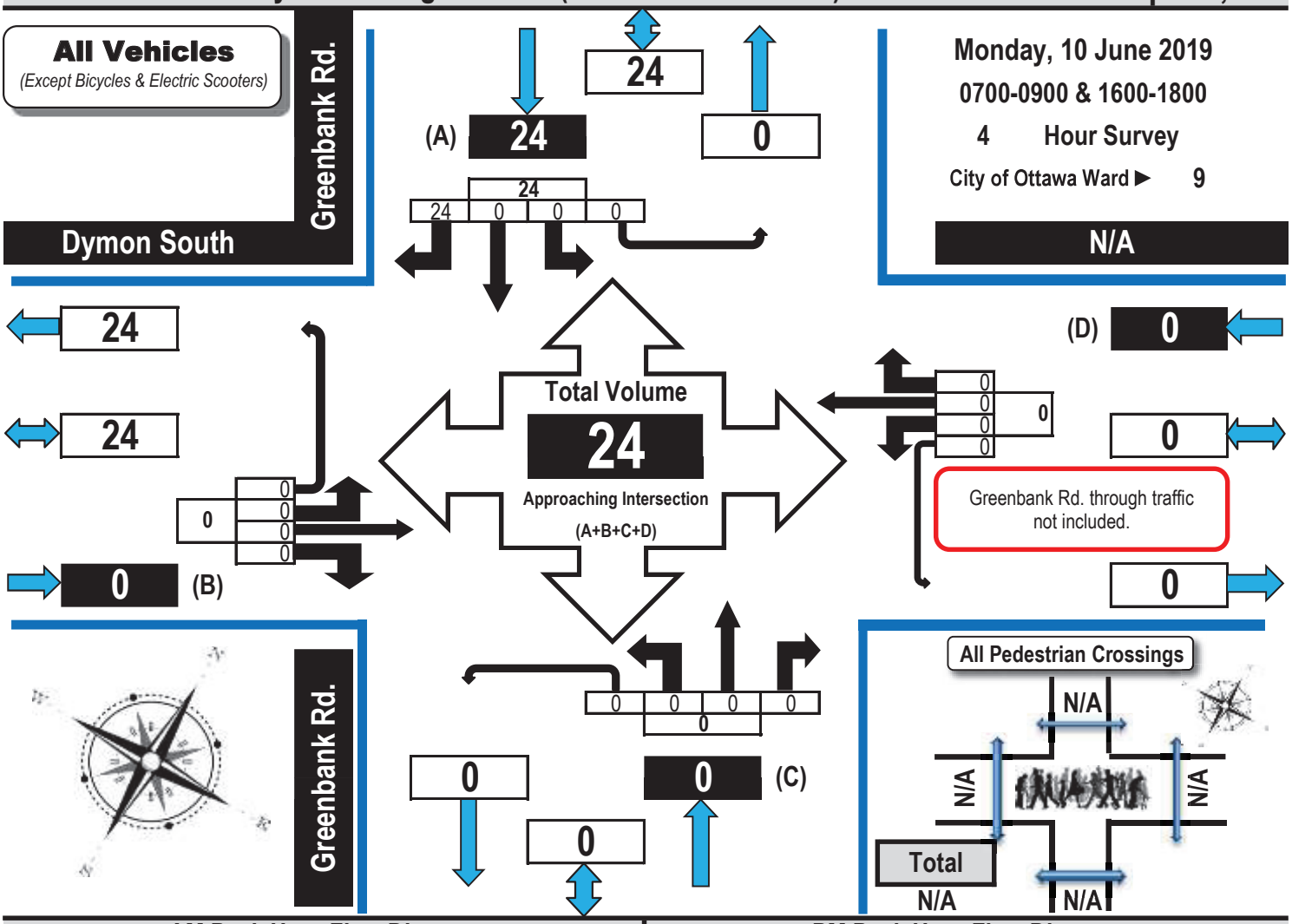

AM Peak Hour Flow Diagram

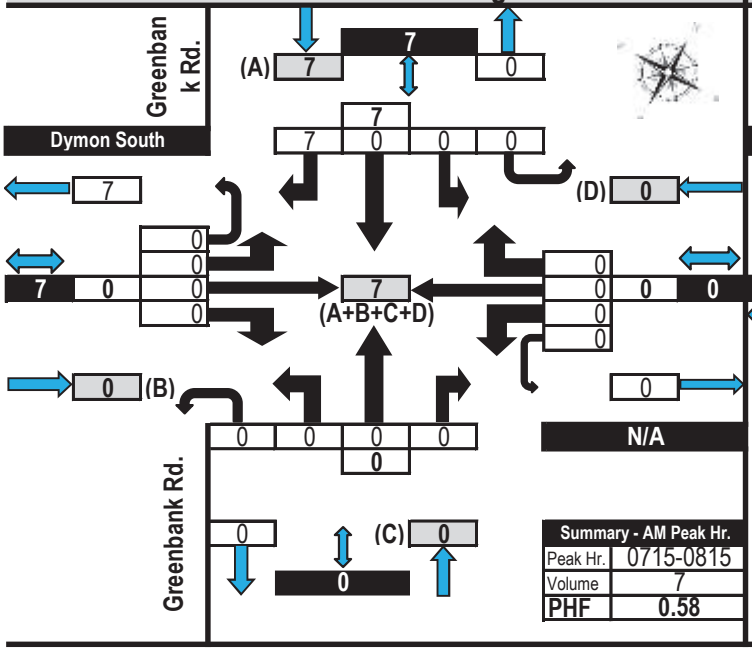

Summary - AM Peak Hr.	
Peak Hr.	0715-0815
Volume	7
PHF	0.58

PM Peak Hour Flow Diagram

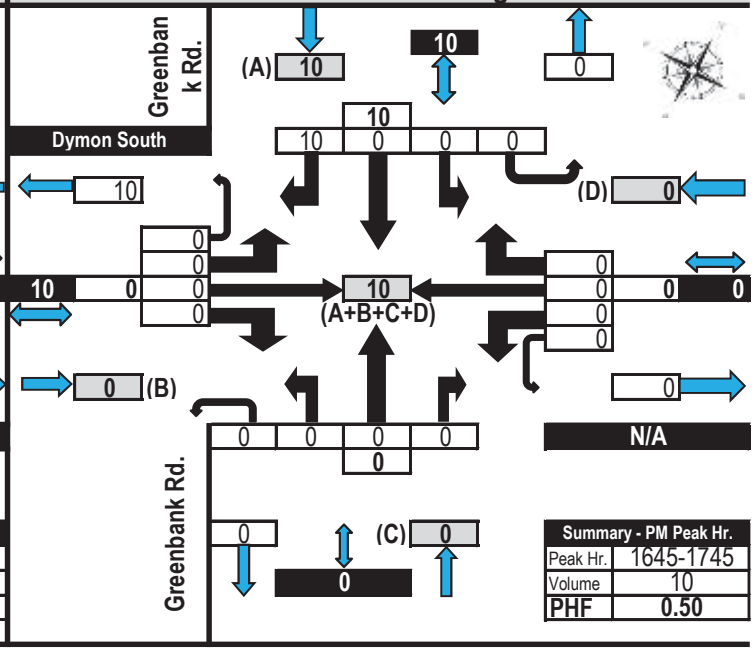

Summary - PM Peak Hr.	
Peak Hr.	1645-1745
Volume	10
PHF	0.50

Turning Movement Count
Summary, OFF and PM Peak Hour Flow Diagrams

Automobiles, Taxis, Light Trucks, Vans, SUV's, Motorcycles, Heavy Trucks, Buses, and School Buses

Greenbank Road & Dymon Storage NORTH (300 Greenbank Road) — Nepean, ON

All Vehicles
(Except Bicycles & Electric Scooters)

Saturday, 8 June 2019
1100 - 1600
5 Hour Survey
City of Ottawa Ward ► 9

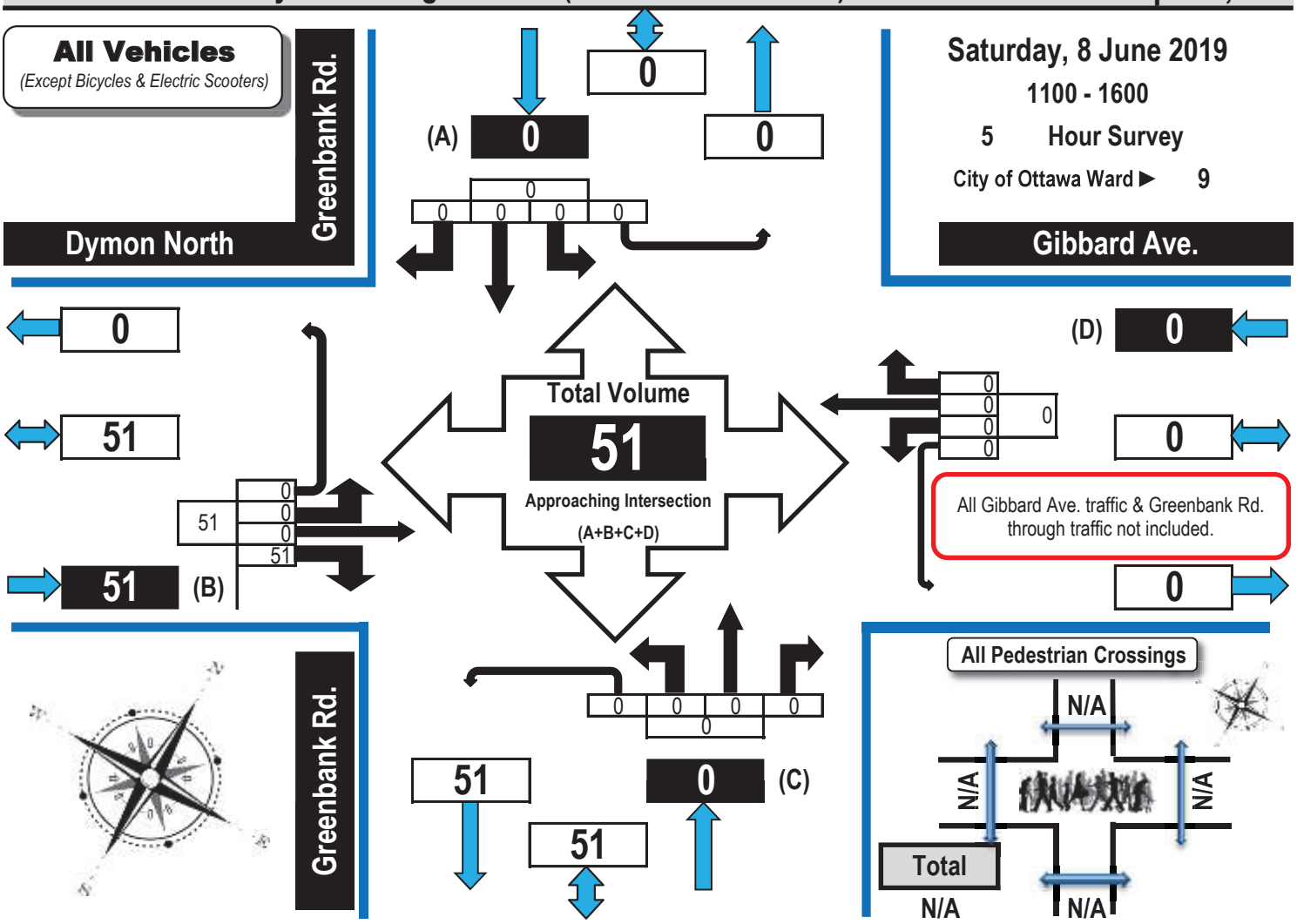

All Pedestrian Crossings

N/A	
N/A	N/A
Total	
N/A	N/A

Off Peak Hour Flow Diagram

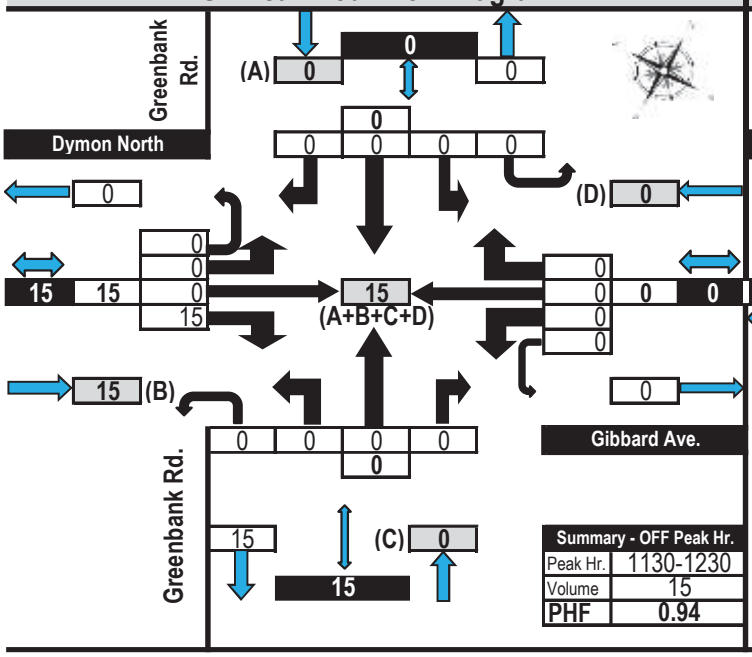

Summary - OFF Peak Hr.	
Peak Hr.	1130-1230
Volume	15
PHF	0.94

PM Peak Hour Flow Diagram

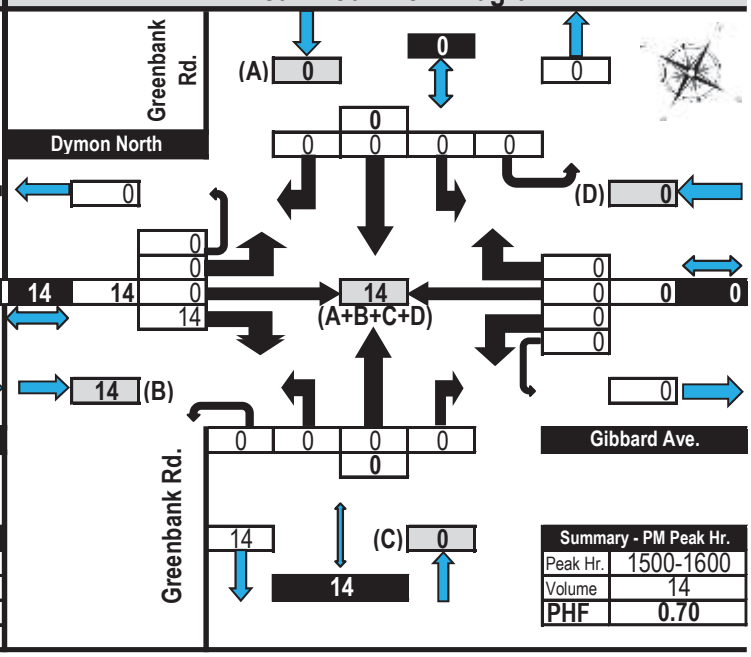

Summary - PM Peak Hr.	
Peak Hr.	1500-1600
Volume	14
PHF	0.70

Turning Movement Count
Summary, OFF and PM Peak Hour Flow Diagrams

Automobiles, Taxis, Light Trucks, Vans, SUV's, Motorcycles, Heavy Trucks, Buses, and School Buses

Greenbank Road & Dymon Storage SOUTH (300 Greenbank Road) — **Nepean, ON**

All Vehicles
(Except Bicycles & Electric Scooters)

Saturday, 8 June 2019
1100 - 1600
5 Hour Survey
City of Ottawa Ward ► 9

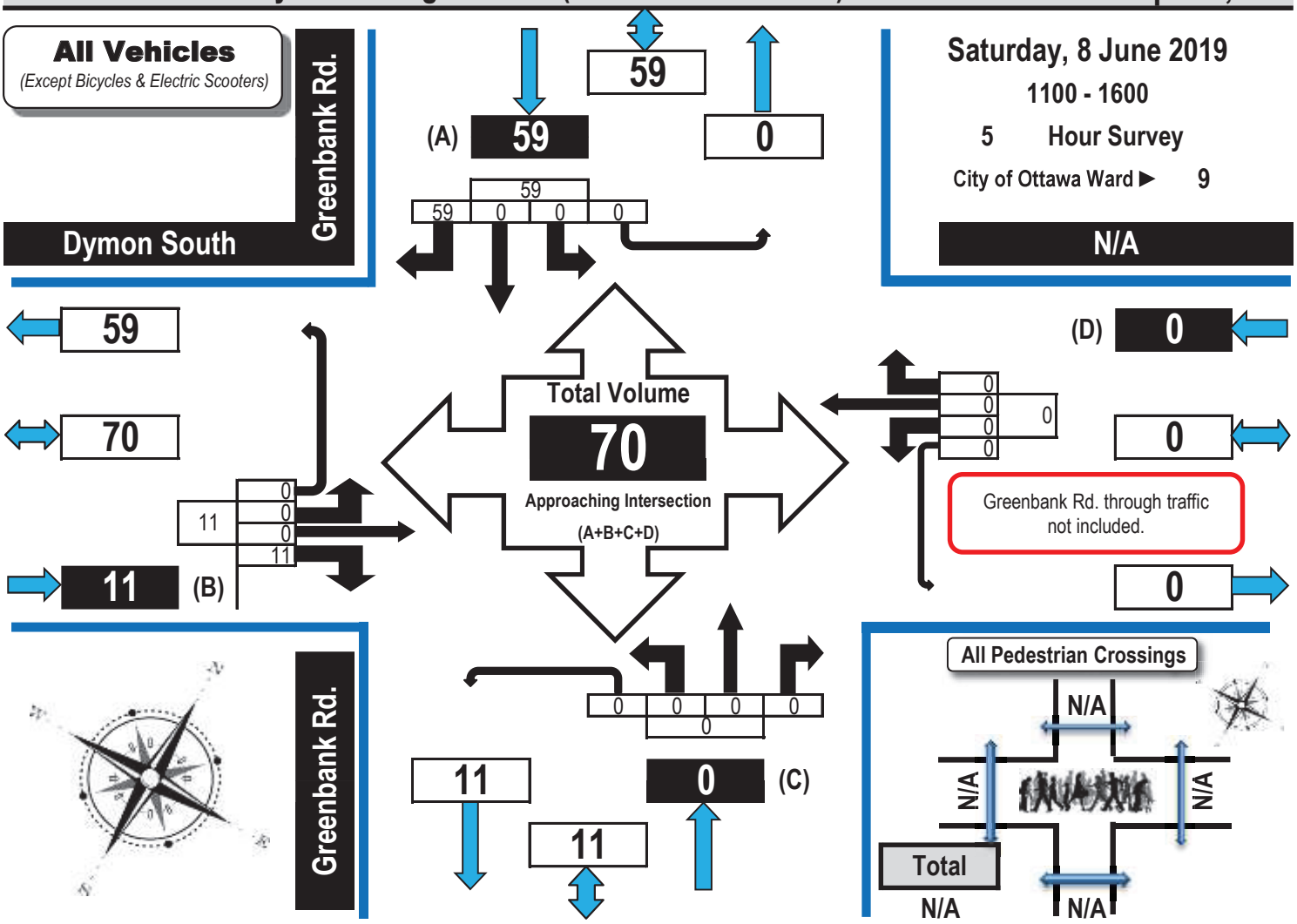

Off Peak Hour Flow Diagram

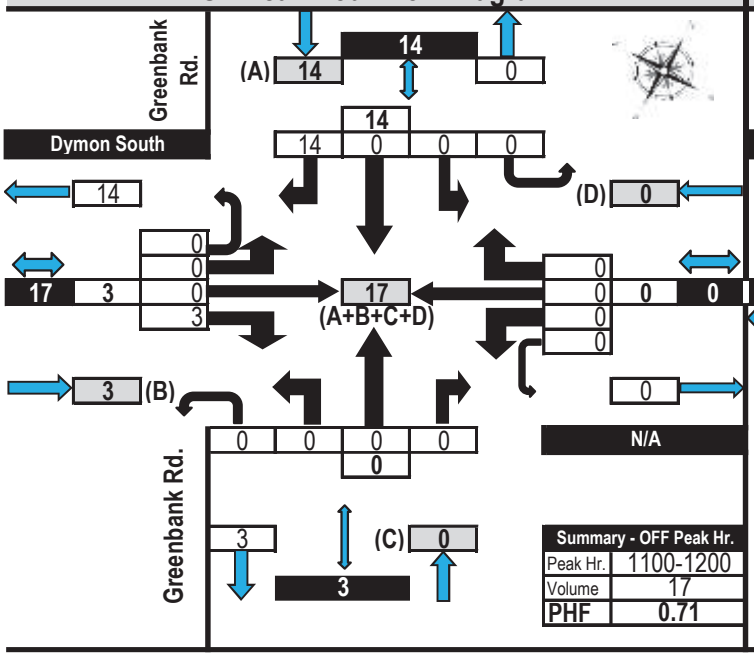

Summary - OFF Peak Hr.	
Peak Hr.	1100-1200
Volume	17
PHF	0.71

PM Peak Hour Flow Diagram

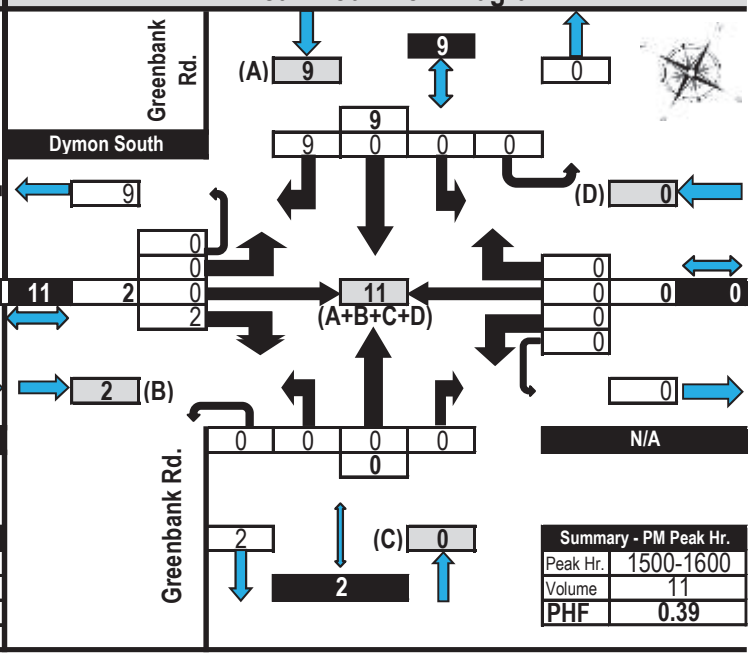

Summary - PM Peak Hr.	
Peak Hr.	1500-1600
Volume	11
PHF	0.39

Appendix C

ITE LUC 151 Mini Warehouse Description

CGH TRANSPORTATION

Land Use: 151
Mini-Warehouse

Description

A mini-warehouse is a building in which a number of storage units or vaults are rented for the storage of goods. They are typically referred to as “self-storage” facilities. Each unit is physically separated from other units, and access is usually provided through an overhead door or other common access point.

Additional Data

Time-of-day distribution data for this land use are presented in Appendix A. For the 10 general urban/suburban sites with data, the overall highest vehicle volumes during the AM and PM on a weekday were counted between 10:30 and 11:30 a.m. and 1:15 and 2:15 p.m., respectively.

The sites were surveyed in the 1980s, the 1990s, the 2000s, and the 2010s in California, Colorado, Massachusetts, Minnesota, New Jersey, Texas, and Utah.

Source Numbers

212, 403, 551, 568, 642, 708, 724, 850, 868, 876

Appendix D

Turning Template Drawings

CGH TRANSPORTATION

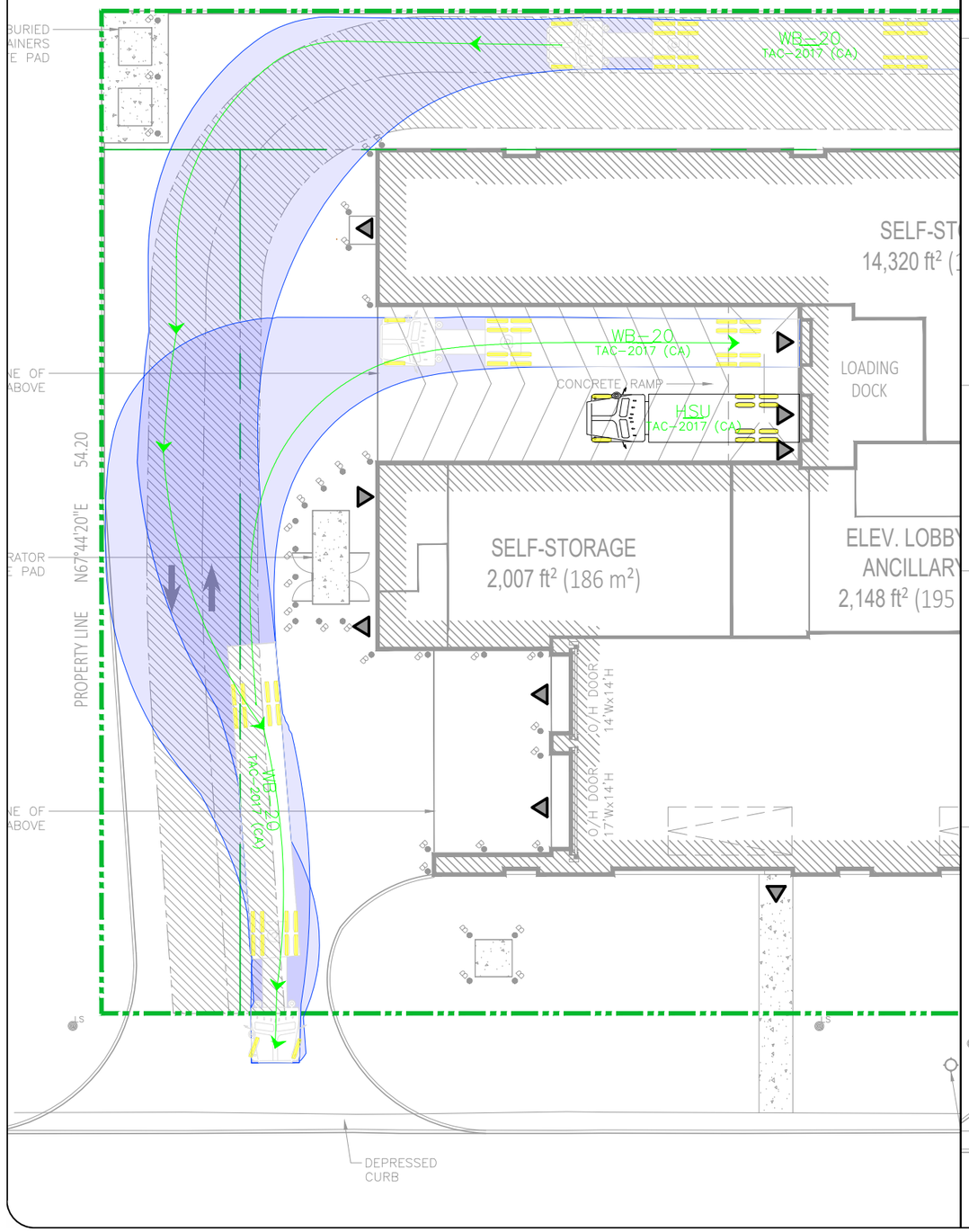

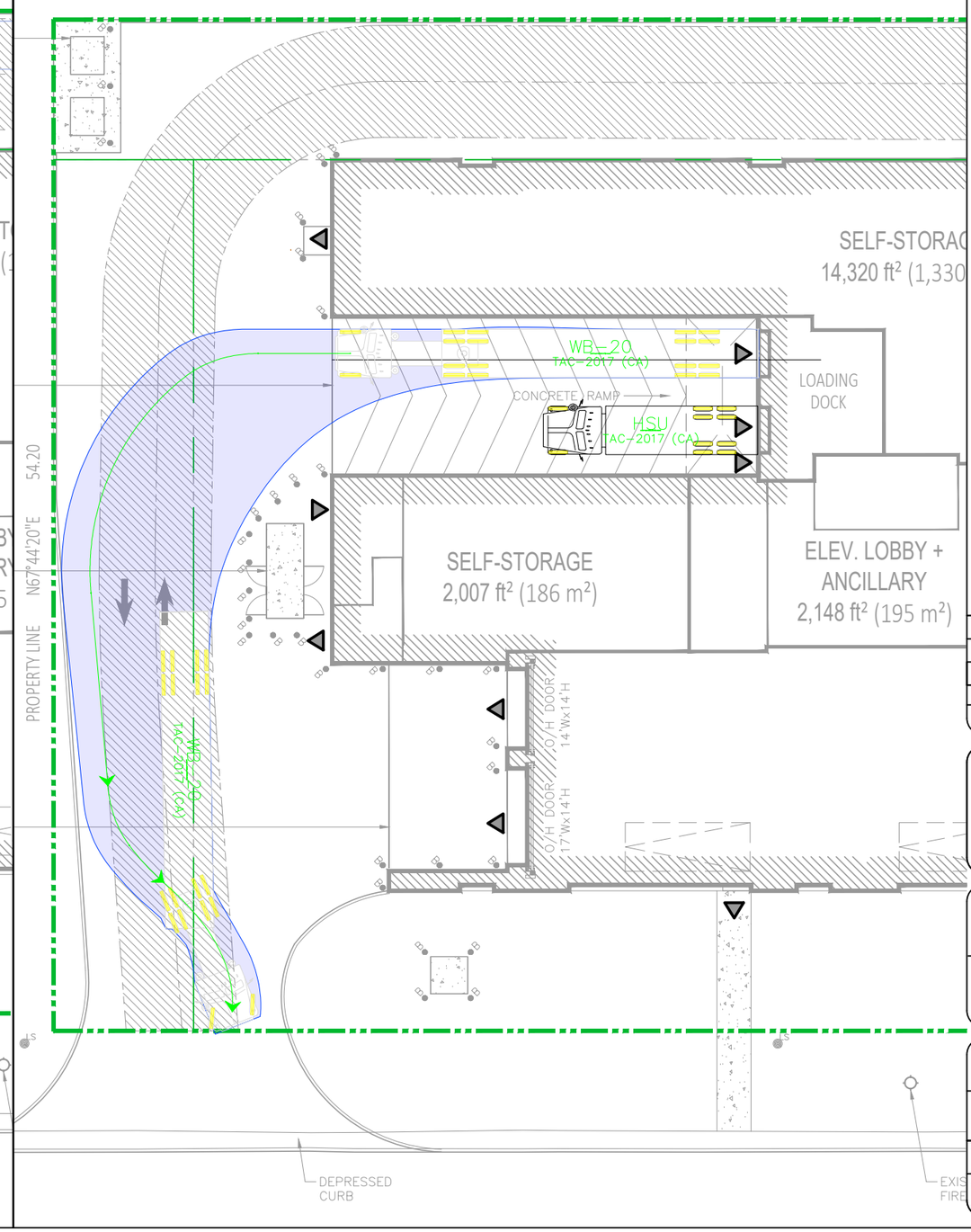

Notes:

REV:	DESCRIPTION:	BY:	DATE:
02	Revised Site Plan Templates	AL	20/12/17
01	Revised Turning Templates	AL	20/12/04
00	Draft Turning Templates	JK	20/05/29

STATUS:

CGH Transportation
13 Markham Ave
Ottawa, ON
K2G 3Z1
(343) 999-9117

CLIENT: Dymon Capital Corporation

ARCHITECT: NCA Inc.

SITE: 3455 Hawthorne

TITLE: East Loading Bay
WB-20 Turning Templates

SCALE AT A3:	DATE:	DRAWN:	CHECKED:
NTS	2020/12/17	AL	MC

PROJECT NO:	DRAWING NO:	REVISION:
2020-53	001	02

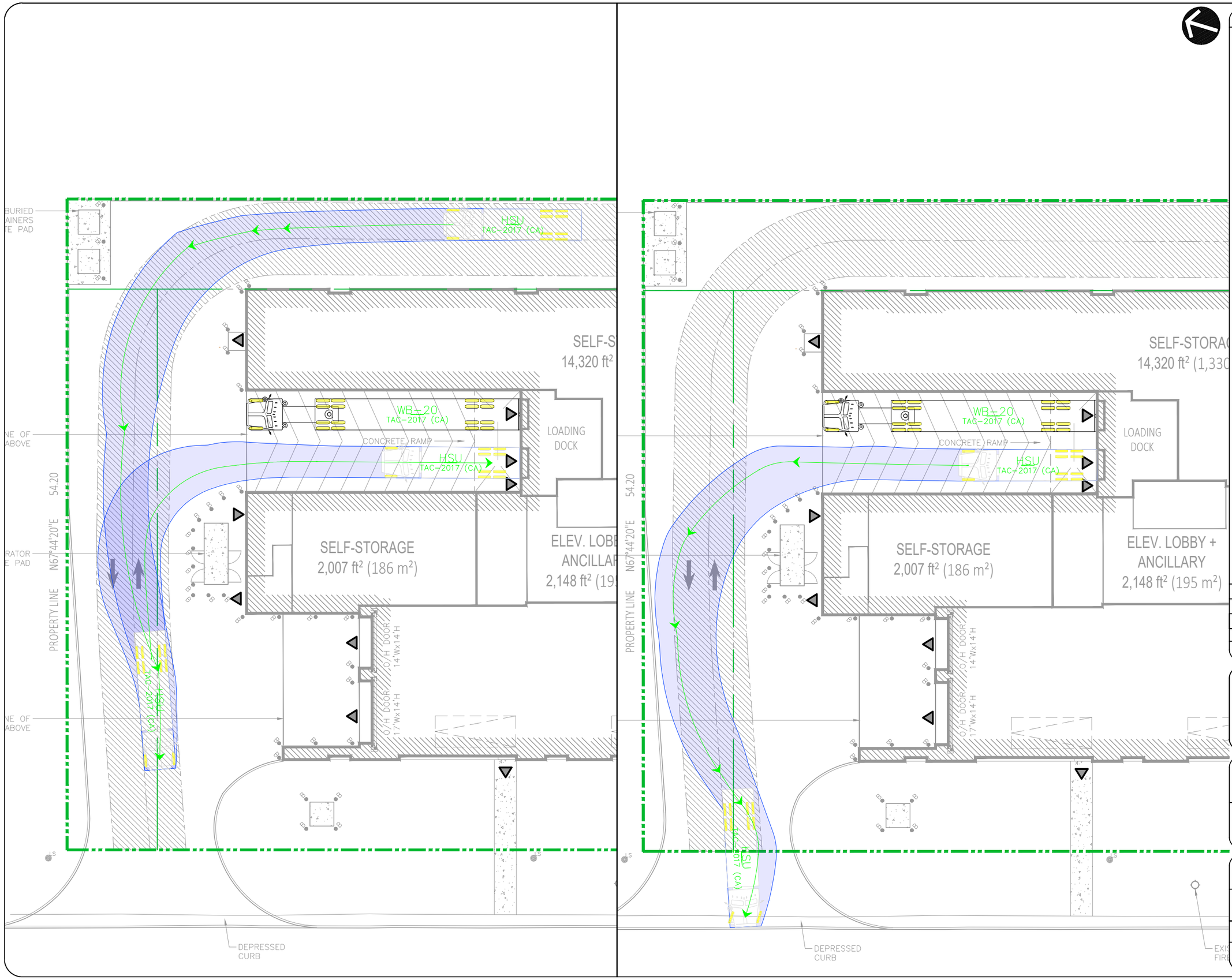

Notes:

REV:	DESCRIPTION:	BY:	DATE:
02	Revised Site Plan	AL	20/12/17
01	Revised Turning Templates	AL	20/12/04
00	Draft Turning Templates	JK	20/05/29

STATUS:

CGH Transportation
13 Markham Ave
Ottawa, ON
K2G 3Z1
(343) 999-9117

CLIENT: Dymon Capital Corporation

ARCHITECT: NCA Inc.

SITE: 3455 Hawthorne

TITLE: West Loading Bay
HSU Turning Templates

SCALE AT A3:	DATE:	DRAWN:	CHECKED:
NTS	2020/12/17	AL	MC
PROJECT NO: 2020-53	DRAWING NO: 002		REVISION: 02

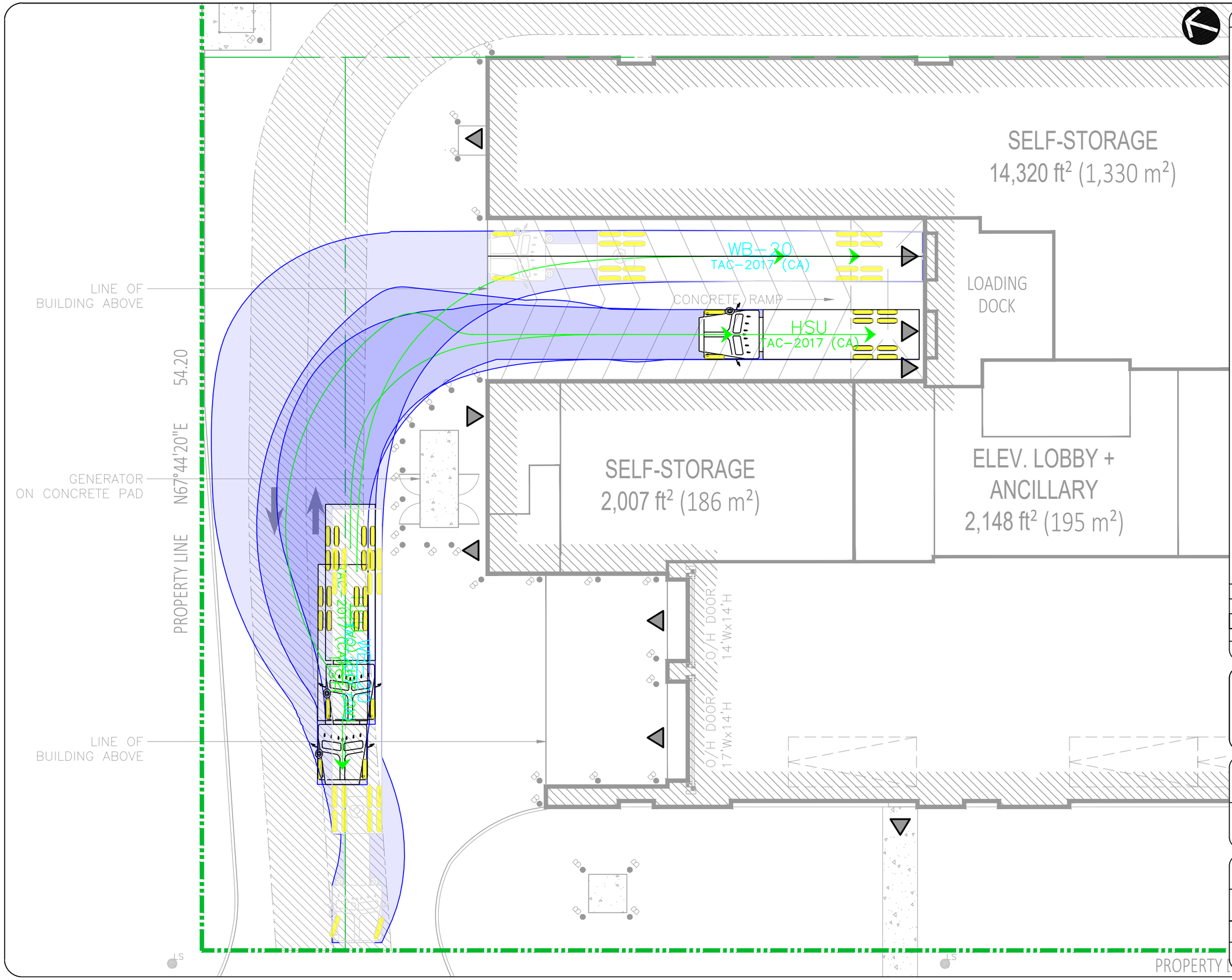

Notes:

REV:	DESCRIPTION:	BY:	DATE:
02	Revised Site Plan	AL	20/12/17
01	Revised Turning Templates	AL	20/12/04
00	Draft Turning Templates	JK	20/05/29

STATUS:

CGH Transportation
13 Markham Ave
Ottawa, ON
K2G 3Z1
(343) 999-9117

CLIENT: Dymon Capital Corporation

ARCHITECT: NCA Inc.

SITE: 3455 Hawthorne

TITLE: West Loading Bay Alternate Location

SCALE AT A3:	DATE:	DRAWN:	CHECKED:
NTS	2020/12/17	AL	MC
PROJECT NO: 2020-53	DRAWING NO: 003		REVISION: 02

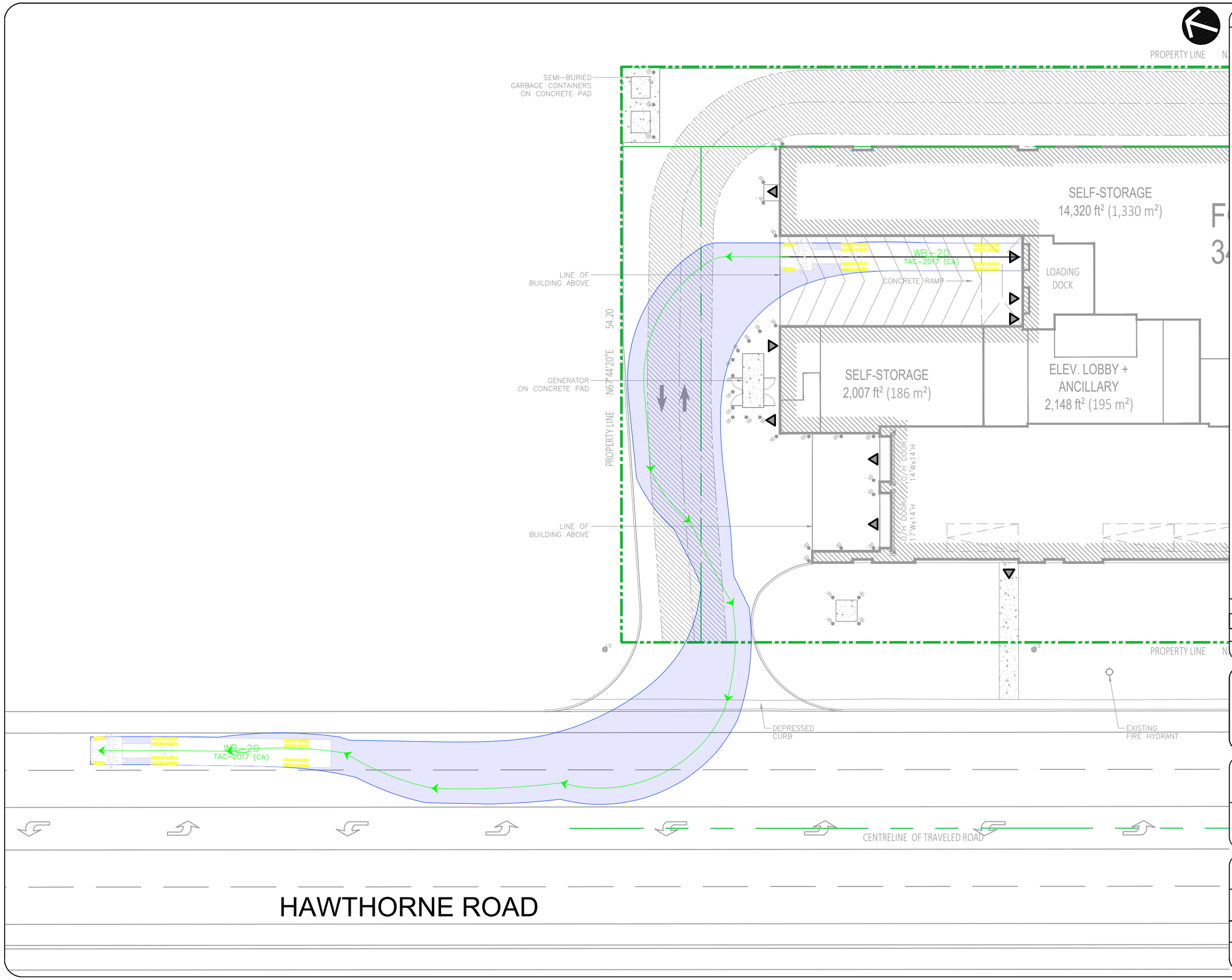

Notes:

REV:	DESCRIPTION:	BY:	DATE:
02	Revised Site Plan	AL	20/12/17
01	Revised Turning Templates	AL	20/12/04

STATUS: Draft

CGH Transportation
13 Markham Ave
Ottawa, ON
K2G 3Z1
(343) 999-9117

CLIENT: Dymon Capital Corporation

ARCHITECT: NCA Inc.

SITE: 3455 Hawthorne

TITLE: North Site Access
Wb 20 Movements

SCALE AT A3:	DATE:	DRAWN:	CHECKED:
NTS	2020/12/17	AL	MC
PROJECT NO: 2020-53	DRAWING NO: 004		REVISION: 02

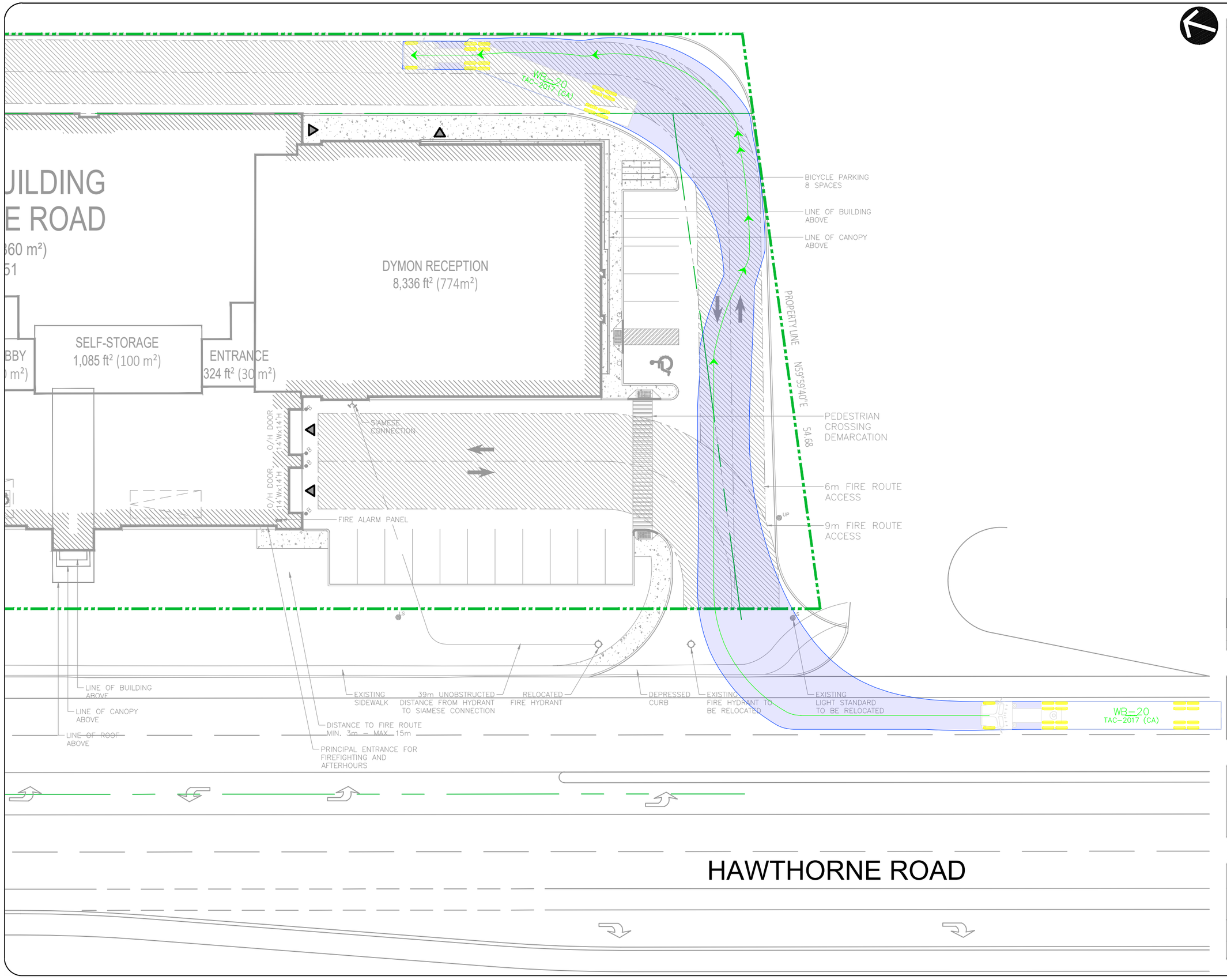

Notes:

REV:	DESCRIPTION:	BY:	DATE:
02	Revised Site Plan	AL	20/12/17
01	Revised Turning Templates	AL	20/12/04

STATUS: Draft

CGH Transportation
13 Markham Ave
Ottawa, ON
K2G 3Z1
(343) 999-9117

CLIENT: Dymon Capital Corporation

ARCHITECT: NCA Inc.

SITE: 3455 Hawthorne

TITLE: South Site Access
Wb 20 Movements

SCALE AT A3:	DATE:	DRAWN:	CHECKED:
NTS	2020/12/17	AL	MC

PROJECT NO:	DRAWING NO:	REVISION:
2020-53	005	02

Appendix E

Proxy Site Parking Data

CGH TRANSPORTATION

Dymon Storage – Coventry & Lola

Off-Street Parking Usage

Dymon Storage - Off Street Parking Inventory

Dymon Storage

323 Coventry Road, Ottawa, ON K1K 3X6

Day: MONDAY **Date:** 10 June 2019 **Survey Hours:** 0730-2130

Weather: Partly cloudy +16C/Overcast Light Rain after 1900 +23C **Surveyor (s):** Brazeau/Carmody

Time	Number of Parked Vehicles by Area							Comments
	Area 1 Main Entrance	Area 2 Accessible	Area 3 Loading Dock	Area 4 West Side Unsecured	Area 5 West Side Secured	Area 6 North Side Secured	Area 7 North Side Unsecured	
0700								Area 4 - west side parking area, one
0730	0	0	1	3	3	15	2	of the vehicles was a trailer parked for
0800	1	0	0	3	3	15	2	every time period.
0830	1	0	2	3	3	15	2	
0900	1	0	2	3	3	15	2	⬅ Area 5 - one truck parked in middle
0930	1	0	3	3	3	15	2	⬅ Area 3 - truck in loading dock
1000	1	0	4	3	3	15	2	
1030	2	0	0	5	3	15	2	
1100	2	0	5	6	3	15	2	⬅ Area 5 - landscaping truck in middle
1130	2	0	6	5	3	14	2	
1200	2	0	7	6	3	14	2	
1230	1	0	7	4	3	14	2	
1300	1	0	1	4	4	15	2	
1330	0	0	1	3	3	15	2	
1400	0	0	1	5	3	15	2	⬅ Area 2 - truck parked beside accessible spot
1430	1	0	5	4	3	14	2	⬅ Area 5 - truck parked in middle of lot
1500	3	0	3	5	3	14	2	
1530	4	0	1	4	4	14	2	⬅ Area 3 - truck in loading dock
1600	2	0	3	4	4	14	2	⬅ Area 3 - truck in loading dock
1630	1	0	1	4	3	16	2	
1700	1	0	0	3	3	16	2	
1730	2	0	1	3	3	16	2	
1800	3	0	2	3	3	16	2	
1830	3	0	3	4	3	16	2	
1900	3	0	0	2	3	17	2	⬅ Area 5 - pickup truck loading
1930	2	0	1	2	3	16	2	Area 6 - north side parking area. Although
2000	3	0	1	2	3	16	2	there are 30 spaces, parking is prohibited
2030	3	0	1	2	3	16	2	in 8 of them to permit tractor trailers to
2100	3	0	0	2	3	16	2	manoeuvre into the loading dock.
2130	2	0	0	2	3	16	2	Accordingly, only 22 spaces are available
# of Pkg Spaces ➡	**4**	**1**	**N/A**	**11**	**4**	**22**	**2**	for long term parking.

323 Coventry Weekday	Area 1 Main Entrance	Area 2 Accessible	Area 3 Loading Dock	Area 4 West Side Unsecured	Area 5 West Side Secured	Area 6 North Side Secured	Area 7 North Side Unsecured	Total (Exterior)	Total (Short Term)	Total (Interior)	Total	Total (Short Term)
Stalls	4	1	N/A	11	4	22	2	44				
730	0	0	1	3	3	15	2	23	0	1	24	1
800	1	0	0	3	3	15	2	24	1	0	24	1
830	1	0	2	3	3	15	2	24	1	2	26	3
900	1	0	2	3	3	15	2	24	1	2	26	3
930	1	0	3	3	3	15	2	24	1	3	27	4
1000	1	0	4	3	3	15	2	24	1	4	28	5
1030	2	0	0	5	3	15	2	27	4	0	27	4
1100	2	0	5	6	3	15	2	28	5	5	33	10
1130	2	0	6	5	3	14	2	26	3	6	32	9
1200	2	0	7	6	3	14	2	27	4	7	34	11
1230	1	0	7	4	3	14	2	24	1	7	31	8
1300	1	0	1	4	4	15	2	26	3	1	27	4
1330	0	0	1	3	3	15	2	23	0	1	24	1
1400	0	0	1	5	3	15	2	25	2	1	26	3
1430	1	0	5	4	3	14	2	24	1	5	29	6
1500	3	0	3	5	3	14	2	27	4	3	30	7
1530	4	0	1	4	4	14	2	28	5	1	29	6
1600	2	0	3	4	4	14	2	26	3	3	29	6
1630	1	0	1	4	3	16	2	26	3	1	27	4
1700	1	0	0	3	3	16	2	25	2	0	25	2
1730	2	0	1	3	3	16	2	26	3	1	27	4
1800	3	0	2	3	3	16	2	27	4	2	29	6
1830	3	0	3	4	3	16	2	28	5	3	31	8
1900	3	0	0	2	3	17	2	27	4	0	27	4
1930	2	0	1	2	3	16	2	25	2	1	26	3
2000	3	0	1	2	3	16	2	26	3	1	27	4
2030	3	0	1	2	3	16	2	26	3	1	27	4
2100	3	0	0	2	3	16	2	26	3	0	26	3
2130	2	0	0	2	3	16	2	25	2	0	25	2

Off-Street Parking Usage

Dymon Storage - Off Street Parking Inventory

Dymon Storage

323 Coventry Road, Ottawa, ON K1K 3X6

Day: SATURDAY **Date:** 8 June 2019 **Survey Hours:** 0830 -1830

Weather: AM Clear +10ºC PM Clear +23ºC **Surveyor (s):** Morgan/Carmody

Time	Number of Parked Vehicles by Area							Comments
	Area 1 Main Entrance	Area 2 Accessible	Area 3 Loading Dock	Area 4 West Side Unsecured	Area 5 West Side Secured	Area 6 North Side Secured	Area 7 North Side Unsecured	
0700								Area 4 - west side parking area
0730								one of the vehicles was a trailer
0800								parked for every time period.
0830	1	0	1	3	2	14	2	
0900	2	0	4	2	3	14	2	Area 5 - west side parking area
0930	3	1	5	2	3	14	2	at 1100 and at 1130, one of the
1000	3	0	4	2	3	14	2	vehicles was a tractor trailer in
1030	3	0	4	3	3	14	2	the loading dock.
1100	3	0	2	3	4	14	2	
1130	3	0	0	5	4	14	2	Area 6 - north side parking area
1200	4	0	1	5	3	14	2	2 vehicles were trailers from
1230	4	0	1	2	3	14	2	0830-1500 and after 1500-1830
1300	3	0	2	2	3	14	2	3 of the vehicles were trailers.
1330	2	0	1	2	3	14	2	
1400	3	0	2	2	3	13	2	Area 6 - north side parking area
1430	4	0	1	3	3	14	2	Although there are 30 spaces,
1500	3	0	6	3	3	14	2	parking is prohibited in 8 of
1530	3	0	2	3	3	15	2	them to permit tractor trailers
1600	4	0	2	3	3	15	2	to manoeuvre into the loading
1630	3	0	2	3	3	15	2	dock. Accordingly, only 22
1700	3	0	1	2	3	15	2	spaces are available for long
1730	4	0	1	2	3	15	2	term parking.
1800	3	0	3	2	3	15	2	
1830	2	0	1	2	3	15	2	
1900								
1930								
2000								
2030								
2100								
2130								
# of Pkg Spaces ➡	4	1	N/A	11	4	22	2	

323 Coventry Saturday	Area 1 Main Entrance	Area 2 Accessible	Area 3 Loading Dock	Area 4 West Side Unsecured	Area 5 West Side Secured	Area 6 North Side Secured	Area 7 North Side Unsecured	Total (Exterior)	Total (Short Term)	Total (Interior)	Total	Total (Short Term)
Stalls	4	1	N/A	11	4	22	2	44				
830	1	0	1	3	2	14	2	22	0	1	23	1
900	2	0	4	2	3	14	2	23	1	4	27	5
930	3	1	5	2	3	14	2	25	3	5	30	8
1000	3	0	4	2	3	14	2	24	2	4	28	6
1030	3	0	4	3	3	14	2	25	3	4	29	7
1100	3	0	2	3	4	14	2	26	4	2	28	6
1130	3	0	0	5	4	14	2	28	6	0	28	6
1200	4	0	1	5	3	14	2	28	6	1	29	7
1230	4	0	1	2	3	14	2	25	3	1	26	4
1300	3	0	2	2	3	14	2	24	2	2	26	4
1330	2	0	1	2	3	14	2	23	1	1	24	2
1400	3	0	2	2	3	13	2	23	1	2	25	3
1430	4	0	1	3	3	14	2	26	4	1	27	5
1500	3	0	6	3	3	14	2	25	3	6	31	9
1530	3	0	2	3	3	15	2	26	4	2	28	6
1600	4	0	2	3	3	15	2	27	5	2	29	7
1630	3	0	2	3	3	15	2	26	4	2	28	6
1700	3	0	1	2	3	15	2	25	3	1	26	4
1730	4	0	1	2	3	15	2	26	4	1	27	5
1800	3	0	3	2	3	15	2	25	3	3	28	6
1830	2	0	1	2	3	15	2	24	2	1	25	3

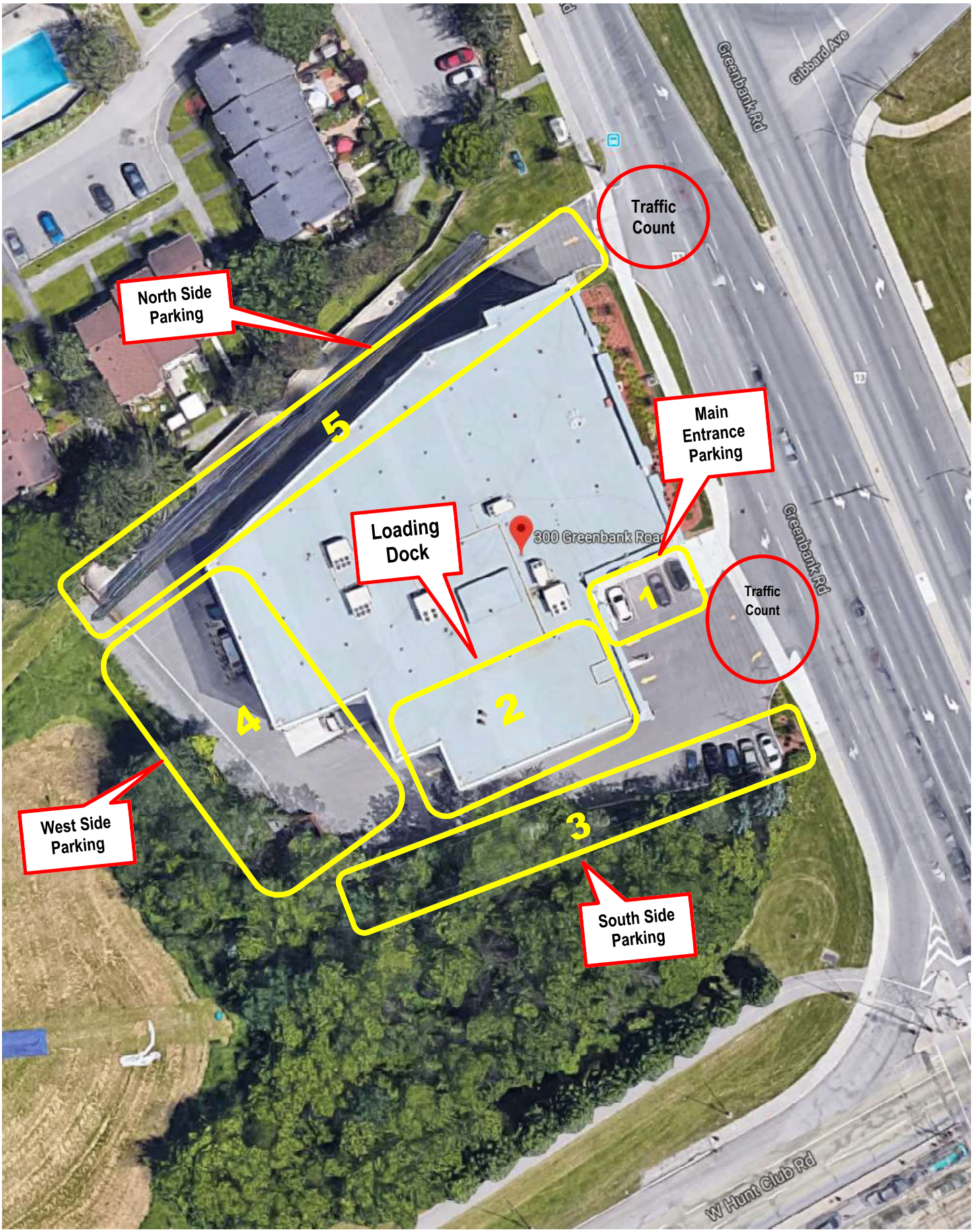

Dymon Storage – Greenbank & West Hunt Club

Off-Street Parking Usage

Dymon Storage - Off Street Parking Inventory

Dymon Storage

300 Greenbank Road, Ottawa, ON K2H 0B6

Day: MONDAY **Date:** 10 June 2019 **Survey Hours:** 0700-0900 & 1600-1800

Weather: Partly Cloudy +16C/Overcast Light Rain after 1900 +23C **Surveyor (s):** Mousseau

Time	Number of Parked Vehicles by Area							Comments
	Area 1 Main Entrance	Area 2 Loading Dock	Area 3 South Side Parking	Area 4 West Side Parking	Area 5 North Side Parking			
0700	0	0	0	0	0			
0730	0	0	2	0	0			1 employee parked
0800	0	0	3	1	0			1 employee Dymon van parked
0830	0	1	3	0	0			near gargage bin
0900	0	1	3	0	0			
0930								
1000								
1030								
1100								
1130								
1200								
1230								
1300								
1330								
1400								
1430								
1500								
1530								
1600	1	2	2	0	0			BFG van parked next to building
1630	0	3	1	0	0			
1700	0	2	1	0	0			
1730	0	2	4	0	0			Jordash van parked in fire lane
1800	1	3	4	0	0			
1830								
1900								
1930								
2000								
2030								
2100								Accessible parking area is
2130								located within the loading dock.
# of Pkg Spaces ➡	4	N/A	5	0	0			

300 Greenbank Weekday	Area 1 Main Entrance	Area 2 Loading Dock	Area 3 South Side Parking	Area 4 West Side Parking	Area 5 North Side Parking	Total (Exterior)	Total (Interior)	Total
Stalls	4	N/A	5	0	0	9		
700	0	0	0	0	0	0	0	0
730	0	0	2	0	0	0	2	2
800	0	0	3	1	0	1	3	4
830	0	1	3	0	0	1	3	4
900	0	1	3	0	0	1	3	4
1600	1	2	2	0	0	3	2	5
1630	0	3	1	0	0	3	1	4
1700	0	2	1	0	0	2	1	3
1730	0	2	4	0	0	2	4	6
1800	1	3	4	0	0	4	4	8

Off-Street Parking Usage

Dymon Storage - Off Street Parking Inventory

Dymon Storage

300 Greenbank Road, Ottawa, ON K2H 0B6

Day: SATURDAY **Date:** 8 June 2019 **Survey Hours:** 1100 - 1600

Weather: Clear +10ºC Clear +23ºC **Surveyor (s):** Mousseau

Time	Number of Parked Vehicles by Area						
	Area 1 Main Entrance	Area 2 Loading Dock	Area 3 South Side Parking	Area 4 West Side Parking	Area 5 North Side Parking		
0700							
0730							
0800							
0830							
0900							
0930							
1000							
1030							
1100	1	4	4	0	0		
1130	2	6	3	0	0		
1200	1	4	3	0	0		
1230	1	1	3	0	1		
1300	1	2	3	0	0		
1330	1	1	4	0	0		
1400	0	2	5	0	1		
1430	0	2	3	0	0		
1500	0	7	4	0	0		
1530	1	6	4	0	0		
1600	0	2	4	0	0		
1630							
1700							
1730							
1800							
1830							
1900							
1930							
2000							
2030							
2100							
2130							
# of Pkg Spaces ➡	4	N/A	5	0	0		

Comments

At 1100 and at 1500 a van parked in the fire lane.

Employee parking takes place in Area #3 (3 vehicles)

Accessible parking area is located within the loading dock.

300 Greenbank Saturday	Area 1 Main Entrance	Area 2 Loading Dock	Area 3 South Side Parking	Area 4 West Side Parking	Area 5 North Side Parking	Total (Exterior)	Total (Interior)	Total
Stalls	4	N/A	5	0	0	9		
1100	1	4	4	0	0	5	4	9
1130	2	6	3	0	0	8	3	11
1200	1	4	3	0	0	5	3	8
1230	1	1	3	0	1	3	3	6
1300	1	2	3	0	0	3	3	6
1330	1	1	4	0	0	2	4	6
1400	0	2	5	0	1	3	5	8
1430	0	2	3	0	0	2	3	5
1500	0	7	4	0	0	7	4	11
1530	1	6	4	0	0	7	4	11
1600	0	2	4	0	0	2	4	6