1. GENERAL

1.1 USE BAR SCALE TO CONFIRM ACTUAL PLOT SCALE. EXISTING AND NEW ELEVATIONS AND INVERTS SHOWN ARE GEODETIC AND ARE IN METERS. ALL PIPE DIMENSIONS ARE IN MILLIMETERS UNLESS OTHERWISE NOTED.
1.2 UNLESS OTHERWISE STATED "ENGINEER" REFERS TO D. B. GRAY ENGINEERING INC.
1.3 EXISTING ELEVATIONS AND LOCATIONS, INVERTS AND SIZES OF EXISTING SERVICES & UTILITIES ARE NOT NECESSARILY SHOWN ON PLAN AND THOSE SHOWN ARE DERIVED FROM AVAILABLE INFORMATION AND MUST BE CONFIRMED ON SITE BEFORE COMMENCING CONSTRUCTION. REPORT ANY DIFFERENCES TO ENGINEER. UNDERGROUND LOCATES (INCLUDING ONTARIO ONE CALL: 1–800–400–2255) SHALL BE CONDUCTED PRIOR TO THE COMMENCEMENT OF ANY EXCAVATION.
1.4 SITE BOUNDARIES AND EXISTING GRADES AND OTHER FEATURES DERIVED FROM TOPOGRAPHIC SURVEY PREPARED BY ANNIS O'SULLIVAN, VOLLEBEKK LTD JOB No. 21048–20. AS PER ELEVATION NOTE 1 ON THE TOPOGRAPHIC SURVEY: "ELEVATIONS SHOWN ARE GEODETIC AND ARE REFERENCED TO THE CGVD28 GEODETIC DATUM, DERIVED FROM VERTICAL CONTROL MONUMENT No. 70U245 HAVING AN ELEVATIONS OF 120.55 METRES." AS DESCRIBED IN THE COSINE STATION REPORT MONUMENT CGVD28 IS LOCATED AT: "STITTSVIILLE CHRIST CHURCH, IN NORTHERN SECTION OF A CROSSROAD JUNCTION, ALONG ROAD BETWEEN OLD STITTSVILLE AND CARP, 3.1 km SOUTHEAST FROM INTERSECTION WITH HIGHWAY No. 17, TABLET IS 67 cm FROM SOUTHWEST OR FRONT WALL, BETWEEN 1ST AND 2ND COURSE OF STONE." IT IS THE RESPONSIBILITY OF THE USER OF THE SURVEY PLAN AND THESE DRAWINGS TO VERIFY THAT THE JOB BENCHMARK HAS NOT BEEN ALTERED OR DISTURBED AND THAT ITS RELATIVE ELEVATION AND DESCRIPTION AGREE WITH THE INFORMATION SHOWN ON SURVEY PLAN AND THESE DRAWINGS.
1.5 REFER TO ARCHITECTURAL AND LANDSCAPE SITE PLANS FOR EXACT LOCATIONS OF BUILDINGS, PAVED AREAS, SIDEWALKS, PLANTERS ETC.
1.6 REFERENCE THE LATEST REVISION AND ALL ADDENDUMS OF THE GEOTECHNICAL INVESTIGATION BY PATERSON GROUP INC. FILE: PG5602–1. SITE PREPARATION INCLUDING BUILDING SUB–GRADE PREPARATION AND PAVEMENT SUB–GRADE PREPARATION AND CONSTRUCTION OF THE PAVEMENT STRUCTURE AND EXCAVATION AND BACKFILLING, INCLUDING COMPACTION OF MATERIALS, SHALL CONFORM TO THE GEOTECHNICAL INVESTIGATION TO THE SATISFACTION OF THE GEOTECHNICAL ENGINEER.
1.7 DRAWINGS ARE TO BE READ IN CONJUNCTION WITH SERVICING STUDY & STORM WATER MANAGEMENT REPORT No. 23024 PREPARED BY D. B. GRAY ENGINEERING INC.
1.8 REINSTATE ADJACENT PROPERTIES TO PRE–CONSTRUCTION CONDITIONS.
1.9 REINSTATE CITY PROPERTIES TO CITY STANDARDS AND TO CITY OF OTTAWA'S SATISFACTION.
1.10 ALL RELEVANT WORK SHALL BE DONE IN ACCORDANCE WITH CURRENT CITY STANDARDS AND SPECIFICATIONS.
1.11 ONTARIO PROVINCIAL STANDARDS & SPECIFICATIONS WILL APPLY WHERE NO CITY STANDARDS ARE AVAILABLE.

2. EROSION AND SEDIMENT CONTROL PLAN

2.1 THE EROSION AND SEDIMENT CONTROL PLAN IS A "LIVING DOCUMENT" AND SHALL BE REVISED IN THE EVENT THE SPECIFIED CONTROL MEASURES ARE NOT SUFFICIENT. THE CONTRACTOR SHALL IMPLEMENT BEST MANAGEMENT PRACTICES TO PROVIDE PROTECTION OF THE AREA DRAINAGE SYSTEM AND THE RECEIVING WATER COURSE DURING CONSTRUCTION ACTIVITIES. THIS INCLUDES LIMITING THE AMOUNT OF EXPOSED SOIL, USING SEDIMENT CAPTURE FILTER SOCK INSERTS IN CATCH BASINS AND MANHOLES AND INSTALLING SILT FENCES AND OTHER EFFECTIVE SEDIMENT TRAPS. THE CONTRACTOR ACKNOWLEDGES THAT FAILURE TO IMPLEMENT APPROPRIATE EROSION AND SEDIMENT CONTROL MEASURES MAY BE SUBJECT TO PENALTIES IMPOSED BY ANY APPLICABLE REGULATORY AGENCY. SPECIFICALLY THE CONTRACTOR SHALL INSTALL THE FOLLOWING CONTROL MEASURES AND INSPECT, MAINTAIN AND REMOVE THE CONTROL MEASURES.
2.2 INSTALL A SILT FENCE BARRIER AROUND STOCKPILED SEDIMENT OR SOIL. PRIOR TO COMMENCEMENT OF CONSTRUCTION INSTALL A SILT FENCE BARRIER AS SHOWN ON PLANS. INSPECT ALL SILT FENCES AT THE END OF EACH DAY AND AFTER EACH RAINFALL. REMOVE SEDIMENT DEPOSITS WHEN THE LEVEL OF DEPOSITS REACHES ONE THIRD THE HEIGHT OF THE FENCE. IMMEDIATELY REPAIR OR REPLACE ANY DAMAGED SECTIONS OF FENCE. DO NOT REMOVE ANY SILT FENCES IN ANY PHASE UNTIL CONSTRUCTION IS COMPLETE.
2.3 PRIOR TO COMMENCEMENT OF CONSTRUCTION INSTALL STRAW BALE FLOW CHECK DAMS AS INDICATED ON DRAWINGS. INSPECT ALL STRAW BALE FLOW CHECK DAMS AT THE END OF EACH DAY AND AFTER EVERY RAINFALL. REMOVE SEDIMENT DEPOSITS WHEN THE LEVEL OF DEPOSITS REACHES ONE THIRD THE HEIGHT OF THE DAM. IMMEDIATELY REPAIR OR REPLACE ANY DAMAGED BALES. STRAW BALES SHALL BE EMBEDDED INTO SOIL A MINIMUM 150MM AND SHALL BE SECURELY ANCHORED BY TWO STAKES. THE FIRST STAKE IN EACH BALE SHALL BE DRIVEN TOWARDS THE PREVIOUSLY LAID BALE TO FORCE THE BALES TOGETHER. DO NOT REMOVE ANY STRAW BALES CONSTRUCTION IS COMPLETE.
2.4 ANY MATERIAL DEPOSITED ON A PUBLIC ROAD SHALL BE REMOVED BY SWEEPING AND SHOVELING OR VACUUMING AND DISPOSING SEDIMENT IN A CONTROLLED AREA. DO NOT SWEEP OR HOSE MATERIAL INTO ANY STORMWATER CONVEYANCE SYSTEM.
2.5 CONSTRUCTION IS CONSIDERED COMPLETE WHEN THE FOLLOWING CONDITIONS HAVE BEEN MET:
a. ALL STRUCTURES HAVE BEEN BUILT.
b. ALL HARD SURFACES HAVE BEEN CONSTRUCTED.
c. ALL PROPOSED GRASSED AREAS ARE EITHER SODDED OR HAVE A FULL COVERAGE OF WELL ESTABLISHED TURF AND HAVE HAD A MINIMUM OF ONE FULL GROWING SEASON (MAY 15TH TO SEPTEMBER 15TH).
d. THERE ARE NO AREAS OF EXPOSED EARTH.
e. ALL STOCKPILED MATERIALS HAVE BEEN REMOVED.
2.6 REMOVE EROSION AND SEDIMENT CONTROL MEASURES WHEN CONSTRUCTION IS COMPLETE.

3. GRADING & DRAINAGE

3.1 NEW GRADES TO MATCH EXISTING AT PROPERTY LINE. NO EXCESS DRAINAGE WILL BE DIRECTED TOWARDS THE ADJACENT PROPERTIES DURING AND AFTER CONSTRUCTION. THERE WILL BE NO ALTERATION TO EXISTING GRADE AND DRAINAGE PATTERNS ON PROPERTY LINE.
3.2 ALL AREAS SHALL BE GRADED TO ENSURE ADEQUATE DRAINAGE AWAY FROM BUILDINGS TO CATCH BASINS, SWALES, DITCHES AND OTHER APPROVED DISPOSAL AREAS. GRADING SHALL BE GRADUAL BETWEEN FINISHED SPOT ELEVATIONS SHOWN ON DRAWINGS TO PREVENT PONDING (OTHER THAN PONDING REQUIRED FOR STORMWATER MANAGEMENT).
3.3 WHETHER RESULT OF POOR WORKMANSHIP OR DAMAGE: DEFECTIVE GRADING SHALL BE CORRECTED. PROMPTLY MAKE GOOD OTHER CONTRACTOR'S WORK DAMAGED BY SUCH CORRECTIONS.
3.4 CULVERTS SHALL BE HDPE TO CITY OF OTTAWA STANDARDS AND SPECIFICATIONS AND TO OPSS 1840 AND CSA B182.8 OR 182.6. MINIMUM 320 kPa STIFFNESS AT 5% DEFLECTION. JOINTS SHALL BE SOIL–TIGHT OR BETTER. BOSS 2000 OR APPROVED EQUAL.
3.5 RIP RAP: PLACE RIP–RAP 300mm THICK AS INDICATED. USE QUARRIED STONE 200mm TO 300mm IN DIAMETER. AREA TO BE RIP RAPPED SHALL BE EXCAVATED AND FINE GRADED TO A UNIFORM AND EVEN SURFACE TO PROVIDE ADEQUATE FOUNDATION. FILL AND THOROUGHLY COMPACT DEPRESSIONS. WHERE RIP RAP IS TO BE PLACED ON SLOPES, EXCAVATE TRENCH AT TOE OF SLOPE. PLACE GEOTEXTILE FABRIC ON PREPARED SURFACE. PLACE RIP RAP ON FABRIC CAREFULLY, TO AVOID PUNCTURING FABRIC. PLACE RIP RAP IN A SET AND STABLE MANNER. ROCK SHALL BE PLACED, STARTING AT THE LOWER END OF THE SLOPE. THE LARGEST ROCKS OBTAINABLE SHALL BE USED AND PLACED IN THE BOTTOM COURSES AND FOR USE AS HEADERS THROUGH SUBSEQUENT COURSES. THEY SHALL BE LAID CLOSELY AND SUCH THAT THEY WILL PROVIDE A REASONABLE SEMBLANCE OF COURSES. FILL VOIDS WITH ROCK SPALLS OR COBBLES. FINNISH SURFACE EVEN, FREE OF LARGE OPENINGS AND NEAT IN APPEARANCE.
3.6 GEOTEXTILE FABRIC: TO OPSS 1860. WOVEN SYNTHETIC FIBRE FABRIC SHALL BE USED IN SILT FENCE BARRIER (GEOSYNTHETIC HD105 OR APPROVED EQUAL). NON–WOVEN SYNTHETIC FIBRE FABRIC 1.75 mm THICK, 200g/sq.m. SHALL BE USED FOR MATERIAL SEPARATION. SUBDRAIN / INFILTRATION TRENCH APPLICATIONS: GEOSYNTHETIC TERRAFIX 360R OR APPROVED EQUAL. RIP RAP APPLICATIONS: GEOSYNTHETIC TERRAFIX 420R OR APPROVED EQUAL. PRIOR TO INSTALLATION SUBMIT SHOP DRAWING TO ENGINEER FOR APPROVAL. GEOTEXTILE FABRIC SHALL BE FREE OF TEARS AND RESISTANT TO DETERIORATION BY ULTRA VIOLET AND HEAT EXPOSURE. PLACE GEOTEXTILE MATERIAL BY UNROLLING ONTO GRADED SURFACE, SMOOTH AND FREE OF TENSION STRESS, FOLDS, WRINKLES AND CREASES. PLACE GEOTEXTILE MATERIAL ON SLOPING SURFACES IN ONE CONTINUOUS LENGTH FROM TOE OF SLOPE TO UPPER EXTENT OF GEOTEXTILE. OVERLAP EACH SUCCESSIVE STRIP OF GEOTEXTILE 600 mm OVER PREVIOUSLY LAID STRIP IN DIRECTION OF FLOW. ALTERNATIVELY THE FABRIC MAY BE LAPPED A MINIMUM OF 300 mm AND PINNED TOGETHER. PROTECT INSTALLED GEOTEXTILE MATERIAL FROM DISPLACEMENT, DAMAGE OR DETERIORATION BEFORE, DURING AND AFTER PLACEMENT OF MATERIAL LAYERS AFTER INSTALLATION, COVER WITH OVERLYING LAYER WITHIN 4 HOURS OF PLACEMENT. DURING DELIVERY AND STORAGE, PROTECT GEOTEXTILES FROM DIRECT SUNLIGHT, ULTRAVIOLET RAYS, EXCESSIVE HEAT, MUD, DIRT, DUST, DEBRIS AND RODENTS. VEHICULAR TRAFFIC NOT PERMITTED DIRECTLY ON GEOTEXTILE. AVOID PUNCTURING GEOTEXTILE. REPLACE DAMAGED OR DETERIORATED GEOTEXTILE.

4. SITE SERVICES

4.1 SEWER MATERIAL SHALL BE PVC SDR–28 FOR AND SHALL CONFORM TO CSA B182.2 AND SHALL HAVE BELL AND SPIGOT JOINTS WITH RUBBER GASKETS. PROVIDE A MINIMUM 1.8m COVER OVER SEWERS. WHERE THE MINIMUM COVER IS NOT POSSIBLE INSULATE AS INDICATED AND AS PER DETAIL. INSULATE FORCEMAIN AS INDICATED AND AS PER DETAIL.
4.2 THE INLET CONTROL DEVICES (LOCATED IN THE INLET OF STORMWATER DETENTION AREA CULVERT SHALL BE PLUG STYLE WITH A ROUND ORIFICE (WITH THE ORIFICE LOCATED AT THE BOTTOM OF THE PLUG) MANUFACTURED BY PEDRO PLASTICS (OR APPROVED EQUAL) AND SIZED BY THE MANUFACTURER FOR A DISCHARGE RATE AS INDICATED ON PLAN. PRIOR TO INSTALLATION SUBMIT SHOP DRAWING TO ENGINEER FOR APPROVAL.
4.3 WATER SUPPLY FOR FIRE FIGHTING STORAGE TANKS, CHUTE WITH FIRE FITTINGS AND DRAW PIPES AS PER LOCAL FIRE DEPARTMENT STANDARDS. SUPPLY AND INSTALL A LOW WATER LEVEL FLOAT ALARM (AUDIBLE AND VISUAL) THAT IS ACTIVATED WHEN THE WATER LEVEL DROPS MORE THAN 300 mm BELOW THE TOP OF THE TANK. CONNECT TWO 45,460 LITRE (10,000 GAL) CONCRETE TANKS WITH 250 mm DIAMETER PVC SDR35 PIPE. CORE DRILL OPENINGS IN TANKS AND MAKE JOINTS WATERTIGHT BETWEEN TANK AND PIPE. ONE TANK SHALL HAVE A CHUTE AND DRAW PIPES. THE SECOND TANK SHALL HAVE AN ACCESS OPENING WITH A 150 mm GALVANIZED STEEL "CANDY CANE" VENT C/W WITH RODENT SCREEN. ANCHOR TANKS TO PREVENT UPLIFT FROM HYDROSTATIC PRESSURES USING A METHOD APPROVED BY TANK MANUFACTURER. HANDLE AND INSTALL FIRE STORAGE TANKS USING METHODS APPROVED BY THE TANK MANUFACTURER AND AS FOLLOWS (IN THE EVENT OF A CONFLICT, THE METHOD APPROVED BY THE MANUFACTURER SHALL BE USED):
A. PLACE TANK PLUMB AND TRUE TO ALIGNMENT AND GRADE.
B. TOP OF TANK SHALL BE A MINIMUM 1200 mm BELOW GRADE. PLACE 50 mm TYPE SM STYROFOAM INSULATION OVER TOP OF TANK AND AROUND SIDES OF CHUTE.
C. SET TANK ON MINIMUM 150 mm OF OPSS GRANULAR A COMPACTED TO 100% CORRECTED MAXIMUM DRY DENSITY OR AS DIRECTED BY MANUFACTURER. RE–CYCLED GRANULAR MATERIALS ARE NOT PERMITTED.
D. PLACE GRANULAR BACKFILL MATERIALS IN A UNIFORM LAYERS TO COMPACTED THICKNESS OF 150 mm, COMPACT TO 95% CORRECTED MAXIMUM DRY DENSITY.
E. PLACE LAYERS SIMULTANEOUSLY ON BOTH SIDES OF INSTALLED WORK TO EQUALIZE LOADING.
F. MAKE JOINTS WATERTIGHT.
4.4 CLASS 4 SEWAGE SYSTEM:
THE PROPOSED CLASS 4 SEWAGE SYSTEM SHALL CONSIST OF A 7,500 L (MINIMUM) SEPTIC TANK; ECOFLO BIOFILTERS (STB–650PR PUMPED UNIT); AND TYPE "A' DISPERSAL BED AND SHALL CONFORM TO THE REQUIREMENTS OF THE ONTARIO BUILDING CODE (OBC). THE SEWAGE SYSTEM SHALL BE CONSTRUCTED BY A REGISTERED SEWAGE SYSTEM INSTALLER. THE ECOFLO BIOFILTER SYSTEM SHALL BE INSTALLED, MAINTAINED AND SERVICED BY MANUFACTURER TRAINED AND AUTHORIZED AGENTS OR EMPLOYEES. THE SEPTIC TANK SHALL CONFORM TO THE REQUIREMENTS OF CSA B66 AND THE OBC AND SHALL BE FITTED WITH AN EFFLUENT FILTER THAT SCREENS OUT PARTICLES LARGER THAN 3.2 mm AND AS RECOMMENDED BY THE MANUFACTURER. HANDLE AND INSTALL SEPTIC TANK USING METHODS APPROVED BY THE TANK MANUFACTURER AND AS FOLLOWS (IN THE EVENT OF A CONFLICT, THE METHOD APPROVED BY THE MANUFACTURER SHALL BE USED):
A. PLACE TANK PLUMB AND TRUE TO ALIGNMENT AND GRADE.
B. TOP OF TANK SHALL BE A MINIMUM 600MM AND A MAXIMUM 1200MM BELOW FINISHED GRADE OR AS PER MANUFACTURER'S RECOMMENDATIONS. INSTALL MANUFACTURER SUPPLIED PRE–CAST CONCRETE ACCESS RISERS TO EXTEND ACCESS AS PER MANUFACTURER'S RECOMMENDATIONS.
C. SET TANK ON MINIMUM 150 mm OF GRANULAR A COMPACTED TO 100% CORRECTED MAXIMUM DRY DENSITY OR AS DIRECTED BY MANUFACTURER.
D. PLACE GRANULAR BACKFILL MATERIALS IN A UNIFORM LAYERS TO COMPACTED THICKNESS OF 150MM, COMPACT TO 95% CORRECTED MAXIMUM DRY DENSITY. BUILD A 3H:1V FROST TAPER WITHIN THE UPPER 1.2M.
E. PLACE LAYERS SIMULTANEOUSLY ON BOTH SIDES OF INSTALLED WORK TO EQUALIZE LOADING.
F. ANCHOR TANK TO PREVENT UPLIFT FROM HYDROSTATIC PRESSURES USING A METHOD APPROVED BY TANK MANUFACTURER.
G. MAKE JOINTS WATERTIGHT BETWEEN TANK AND PIPE.

5. CONSTRUCTION:

5.1 PRIOR TO COMMENCING WORK:
A. OBTAIN AND PAY FOR ALL NECESSARY PERMITS AND APPROVALS FROM THE AUTHORITIES.
B. SIZE, DEPTH AND LOCATION OF EXISTING SERVICES, UTILITIES AND STRUCTURES AS INDICATED ON THE DRAWINGS ARE FOR GUIDANCE ONLY. ALL EXISTING SERVICES, UTILITIES AND STRUCTURES ARE NOT NECESSARILY SHOWN ON THE DRAWINGS. COMPLETENESS AND ACCURACY ARE NOT GUARANTEED. NOTIFY ALL APPLICABLE OWNERS, UTILITY COMPANIES AND AUTHORITIES HAVING JURISDICTION OF PROPOSED WORK AND LOCATE AND CLEARLY IDENTIFY ALL EXISTING SERVICES, UTILITIES AND STRUCTURES ON AND ADJACENT TO THE SITE. UNDERGROUND LOCATES (INCLUDING ONTARIO ONE CALL: 1–800–400–2255) SHALL BE CONDUCTED PRIOR TO THE COMMENCEMENT OF ANY EXCAVATION. CONFIRM LOCATIONS OF BURIED SERVICES AND UTILITIES BY CAREFUL TEST EXCAVATIONS AND REPORT ANY DIFFERENCES TO THE ENGINEER.
C. EXISTING GRADE ELEVATIONS INDICATED ON THE DRAWINGS ARE FOR GUIDANCE ONLY. COMPLETENESS AND ACCURACY ARE NOT GUARANTEED. CONFIRM EXISTING GRADE ELEVATIONS AND REPORT ANY DIFFERENCES TO THE ENGINEER.
D. COORDINATE AND SCHEDULE WORK WITH THE AUTHORITIES AND OTHER TRADES.
E. SCHEDULE WORK TO PROVIDE THE MINIMUM DISRUPTION TO SERVICES.
5.2 MAINTAIN AND PROTECT FROM DAMAGE, SERVICES, UTILITIES AND STRUCTURES ENCOUNTERED.
5.3 PROTECT EXISTING BUILDINGS, TREES AND OTHER PLANTS, LAWNS, FENCING, SERVICE POLES, WIRES, PAVEMENT, SURVEY BENCH MARKS AND MONUMENTS AND OTHER SURFACE FEATURES FROM DAMAGE WHILE WORK IS IN PROGRESS. DO NOT DISTURB SOIL WITHIN BRANCH SPREAD OF TREES OR SHRUBS THAT ARE TO REMAIN.
5.4 PROVIDE TRAFFIC CONTROL AND SAFETY MEASURES INCLUDING ANY NECESSARY PERSONNEL AND THE SUPPLY, INSTALLATION, REMOVAL AND REPLACEMENT OF ALL NECESSARY SIGNAGE AND BARRIERS, AS REQUIRED BY THE AUTHORITIES. IF APPLICABLE, PROVIDE TRAFFIC MANAGEMENT PLAN AS PER CITY OF OTTAWA REQUIREMENTS.
5.5 REMOVE OBSTRUCTIONS, ICE AND SNOW, FROM SURFACES TO BE EXCAVATED.
5.6 CUT PAVEMENT AND / OR SIDEWALK NEATLY ALONG LIMITS OF PROPOSED EXCAVATION IN ORDER THAT SURFACE MAY BREAK EVENLY AND CLEANLY.
5.7 COORDINATE AND PAY FOR GEOTECHNICAL INSPECTIONS AND COMPACTION TESTS OF SUB–GRADE, PIPE BEDDING AND EACH LAYER OF SURROUND MATERIAL, BACKFILL, SUB–BASE, BASE AND ASPHALT TO THE SATISFACTION OF THE GEOTECHNICAL CONSULTANT AND ENGINEER. SUBMIT GEOTECHNICAL INSPECTIONS AND COMPACTION REPORTS TO ENGINEER.
5.8 CUT AND FILL AS NECESSARY TO ACHIEVE THE REQUIRED SUB–GRADE ELEVATION. DISPOSE OF SURPLUS AND UNSUITABLE EXCAVATED MATERIAL OFF SITE. FILL MATERIAL AND THE PLACEMENT AND COMPACTION OF THE FILL MATERIAL AS PER THE GEOTECHNICAL REPORT AND TO THE SATISFACTION OF THE GEOTECHNICAL CONSULTANT. STOCKPILE GRANULAR AND FILL MATERIALS IN MANNER TO PREVENT SEGREGATION AND PROTECT FROM CONTAMINATION.
5.9 EXCAVATION, TRENCHING & BACKFILL:
A. SHORE AND BRACE EXCAVATIONS, PROTECT SLOPES AND BANKS AND PERFORM ALL WORK IN ACCORDANCE WITH ONTARIO REGULATION 213/91 UNDER THE ONTARIO OCCUPATIONAL HEALTH AND SAFETY ACT AND OTHER AUTHORITIES HAVING JURISDICTION.
B. KEEP EXCAVATIONS FREE OF WATER WHILE WORK IS IN PROGRESS. PROTECT OPEN EXCAVATIONS AGAINST FLOODING AND DAMAGE DUE TO SURFACE RUN–OFF.
C. EXCAVATION MUST NOT INTERFERE WITH BEARING CAPACITY OF ADJACENT FOUNDATIONS.
D. DO NOT OBSTRUCT FLOW OF SURFACE DRAINAGE OR NATURAL WATERCOURSES.
E. EXCAVATE TO LINES, GRADES, ELEVATIONS AND DIMENSIONS AS INDICATED.
F. EARTH BOTTOMS OF EXCAVATIONS TO BE UNDISTURBED SOIL, LEVEL, FREE FROM LOOSE, SOFT OR ORGANIC MATTER.
G. ALL STRUCTURES WITHIN PAVED AREAS SHALL HAVE 4:1 FROST TAPERS FROM FROST LINE TO SUB–GRADE.
H. CORRECT OVER–EXCAVATION WITH GRANULAR A COMPACTED TO NOT LESS THAN 95% OF CORRECTED MAXIMUM DRY DENSITY.
I. SUB–GRADE AND AREAS TO BE BACKFILLED TO BE FREE FROM DEBRIS, SNOW, ICE, WATER AND FROZEN GROUND.
J. DO NOT USE BACKFILL MATERIAL WHICH IS FROZEN OR CONTAINS ICE, SNOW OR DEBRIS.
K. BEDDING AND SURROUND MATERIAL FOR SEWERS AND WATER LINE SHALL BE OPSS GRANULAR A.
L. DO NOT USE BEDDING, SURROUND OR BACKFILL MATERIAL WHICH IS FROZEN OR CONTAINS ICE, SNOW OR DEBRIS.
M. PIPE BEDDING SHALL BE 150mm THICK. SHAPE BED TRUE TO GRADE AND TO PROVIDE CONTINUOUS, UNIFORM BEARING SURFACE FOR PIPE.
N. PLACE SURROUND MATERIAL AROUND PIPES TO FULL WIDTH OF TRENCH AND TO 300mm ABOVE PIPES.
O. PLACE BEDDING AND SURROUND MATERIAL IN UNIFORM LAYERS NOT EXCEEDING 150mm COMPACTED THICKNESS. PLACE FILL AND BACKFILL MATERIAL IN UNIFORM LAYERS NOT EXCEEDING 300mm COMPACTED THICKNESS.
P. COMPACT EACH LAYER TO 95% OF CORRECTED DRY DENSITY BEFORE PLACING SUCCEEDING LAYER.
Q. DO NOT BACKFILL AROUND OR OVER CAST–IN–PLACE CONCRETE WITHIN 24 HOURS AFTER PLACING OF CONCRETE.
R BACKFILL MATERIALS WITHIN 1.8m OF PROPOSED GRADE SHALL MATCH THE MATERIALS EXPOSED ON THE TRENCH WALLS. BACKFILL BELOW 1.8m OF THE PROPOSED CAN CONSIST OF EITHER ACCEPTABLE NATIVE MATERIAL; ROCK; OR IMPORTED GRANULAR MATERIAL CONFORMING TO OPSS GRANULAR B TYPE I OR II. ANY ORGANIC SOILS OR TOPSOIL, IF ENCOUNTERED, SHALL BE REMOVED FROM THE EXCAVATION. IF ROCK IS USED AS BACKFILL IT SHALL BE WELL SHATTERED AND GRADED AND 200mm OR SMALLER IN DIAMETER. TO PREVENT INGRESS OF FINE MATERIAL INTO VOIDS IN THE ROCK FILL, THE UPPER SURFACE OF THE ROCK FILL SHALL BE COVERED WITH 150mm LAYER OF COMPACTED, WELL GRADED CRUSHED STONE PLACED ON GEOTEXTILE FABRIC.
5.10 PIPES:
A. HANDLE PIPE USING METHODS APPROVED BY MANUFACTURER.
B. LAY, CUT AND JOIN PIPES IN ACCORDANCE WITH MANUFACTURER'S RECOMMENDATIONS.
C. USE ONLY FITTINGS AS RECOMMENDED BY PIPE MANUFACTURER.
D. LAY PIPES ON PREPARED BED, TRUE TO LINE AND GRADE AND ENSURE BARREL OF EACH PIPE IS IN CONTACT WITH SHAPED BED THROUGHOUT ITS FULL LENGTH, FREE OF SAGS OR HIGH POINTS.
E. DO NOT EXCEED MAXIMUM JOINT DEFLECTION RECOMMENDED BY PIPE MANUFACTURER.
F. WHENEVER WORK IS SUSPENDED, INSTALL REMOVABLE WATERTIGHT BULKHEAD AT OPEN END OF LAST PIPE LAID TO PREVENT ENTRY OF FOREIGN MATERIALS.
G. WHEN STOPPAGE OF WORK OCCURS, BLOCK PIPES TO PREVENT CREEP DURING DOWN TIME. MAKE WATERTIGHT CONNECTIONS TO MANHOLES.
H. JOINTS SHALL BE STRUCTURALLY SOUND AND WATERTIGHT.
I. REPAIR OR REPLACE PIPE, PIPE JOINT OR BEDDING FOUND DEFECTIVE.
5.12 SEWERS AND SEWER SERVICES:
A. CONSTRUCT SEWER TRENCHES AS PER CITY DWG S6 & S7.
B. RIGID STRUCTURES, INSTALL PIPE JOINTS NOT MORE THAN 1.2m FROM SIDE OF STRUCTURE.
C. MAINTAIN EXISTING SEWAGE FLOWS DURING CONSTRUCTION.
5.11 MAINTAIN RECORD DRAWINGS AND RECORD ACCURATELY DEVIATIONS FROM THE ORIGINAL CONTRACT DOCUMENTS CAUSED BY SITE CONDITIONS AND CHANGES MADE BY CHANGE ORDER OR ADDITIONAL INSTRUCTIONS. UPDATE DAILY AND MAKE AVAILABLE ON–SITE FOR REVIEW THROUGHOUT THE CONSTRUCTION PERIOD. MARK CHANGES IN RED INK. RECORD DRAWINGS SHALL INCLUDE BUT NOT NECESSARILY LIMITED TO CHANGES OF DIMENSION AND DETAIL; CHANGES TO GRADE ELEVATIONS; AND HORIZONTAL AND VERTICAL LOCATIONS OF UNDERGROUND SERVICES, UTILITIES AND APPURTENANCES REFERENCED TO A PERMANENT SURFACE STRUCTURE. SUBMIT DRAWINGS TO ENGINEER AT THE END OF CONSTRUCTION. SUBMIT A RECORD DRAWING OF "AS–BUILT" GRADE ELEVATIONS, PREPARED BY A SURVEYOR, TO THE ENGINEER AT THE END OF CONSTRUCTION.
5.12 CONCRETE CURBS SHALL BE CONSTRUCTED TO CITY OF OTTAWA DRAWING No. SC1.1. CONCRETE SIDEWALK SHALL BE CONSTRUCTED TO CITY OF OTTAWA DRAWING No. SC4. MONOLITHIC CONCRETE CURB AND SIDEWALK SHALL BE CONSTRUCTED TO CITY OF OTTAWA DRAWING No. SC2.
5.13 WHETHER RESULT OF POOR WORKMANSHIP, USE OF DEFECTIVE PRODUCTS OR DAMAGE: DEFECTIVE PORTIONS OF CURBS, SIDEWALK AND ASPHALT SHALL BE CORRECTED OR REMOVED AND REPLACED. PROMPTLY MAKE GOOD OTHER CONTRACTOR'S WORK DAMAGED BY SUCH REMOVALS OR REPLACEMENTS.
5.11 REINSTATE ALL AREAS DISTURBED BY CONSTRUCTION. REINSTATE PAVEMENTS, CURBS AND SIDEWALKS, TO THICKNESS, STRUCTURE AND ELEVATION WHICH EXISTED BEFORE CONSTRUCTION. REINSTATE LANDSCAPED AREAS TO THE CONDITION AND ELEVATION WHICH EXISTED BEFORE CONSTRUCTION.
5.13 CLEAN AND REINSTATE AREAS AFFECTED BY THE WORK.

6. PAVEMENT

6.1 PAVEMENT STRUCTURE:
LIGHT DUTY PAVEMENT:
50mm HL–3 OR SUPERPAVE 12.5 ASPHALTIC CONCRETE
150mm OPSS GRANULAR A BASE
300mm OPSS GRANULAR B TYPE II SUB–BASE
RE–CYLCLED GRANULAR MATERIALS ARE NOT PERMITTED.
HEAVY DUTY PAVEMENT:
40mm HL–3 OR SUPERPAVE 12.5 ASPHALTIC CONCRETE
50mm HL–8 OR SUPERPAVE 19.0 ASPHALTIC CONCRETE
150mm OPSS GRANULAR A BASE
400mm OPSS GRANULAR B TYPE II SUB–BASE
RE–CYLCLED GRANULAR MATERIALS ARE NOT PERMITTED.
ASPHALTIC CONCRETE SHALL BE PERFORMANCE GRADE PG58–34.
HOT MIX ASPHALT MATERIALS SHALL BE ACCORDING TO OPSS 1150 OR 1151.
6.2 PAVEMENT SUB–GRADE PREPARATION AND CONSTRUCTION OF THE PAVEMENT STRUCTURE SHALL CONFORM TO THE GEOTECHNICAL INVESTIGATION TO THE SATISFACTION OF THE GEOTECHNICAL ENGINEER.
6.3 REMOVE ALL MATERIALS TO THE SUB–GRADE LEVEL. REMOVE ORGANIC OR UNSUITABLE MATERIAL FROM SUB–GRADE WHERE ENCOUNTERED TO THE SATISFACTION OF THE GEOTECHNICAL CONSULTANT. SUB–GRADE TO BE FREE FROM DEBRIS, SNOW, ICE, WATER AND FROZEN GROUND. COMPACT SUB–GRADE TO 95%.
6.4 CONSTRUCT GRANULAR BASE AND SUB–BASE TO DEPTH AND GRADE IN AREAS INDICATED.CONSTRUCT A 5H:1V FROST TAPER IN SUB–GRADE SURFACE AS A TRANSITION BETWEEN DIFFERING PAVEMENT STRUCTURES AND BETWEEN PAVEMENT AND CURBS AND SIDEWALKS.
6.5 ENSURE NO FROZEN MATERIAL IS PLACED. PLACE MATERIAL ONLY ON CLEAN UNFROZEN SURFACE, FREE FROM SNOW OR ICE.
6.6 PLACE MATERIAL TO FULL WIDTH IN UNIFORM LAYERS NOT EXCEEDING 300mm COMPACTED THICKNESS. SHAPE EACH LAYER TO SMOOTH CONTOUR AND COMPACT TO SPECIFIED DENSITY BEFORE SUCCEEDING LAYER IS PLACED.
6.7 COMPACT SUB–BASE MATERIAL TO DENSITY OF NOT LESS THAN 98% CORRECTED MAXIMUM DRY DENSITY. FILL OVER–EXCAVATED SUB–GRADE WITH SUB–BASE MATERIAL, COMPACT TO 98%. COMPACT BASE MATERIAL TO DENSITY NOT LESS THAN 100% CORRECTED MAXIMUM DRY DENSITY.
6.8 IN AREAS NOT ACCESSIBLE TO ROLLING EQUIPMENT, COMPACT TO SPECIFIED DENSITY WITH MECHANICAL TAMPERS.
6.9 REPLACE PAVEMENT DISTURBED BY CONSTRUCTION AND REPLACE WITH PAVEMENT STRUCTURE ABOVE.
6.10 WHERE NEW ASPHALT COMES IN CONTACT WITH EXISTING PAVEMENT: SAWCUT EXISTING ASPHALT LAYER TO CREATE A CLEAN STRAIGHT EDGE AND CONSTRUCT AS PER DETAIL. TACK COAT SHALL BE APPLIED TO ASPHALT SURFACES AT WHICH JOINTS ARE TO BE MADE INCLUDING EXISTING PAVEMENT SURFACES THAT HAVE BEEN CUT, GROUND OR MILLED. TACK COAT THE SURFACE OF ALL BINDER COURSES AND BUTTING CONCRETE SURFACES. SURFACES TO BE TACK COATED SHALL BE FREE OF STANDING WATER AND CONTAMINATION, SUCH AS MUD, LOOSE AGGREGATE OR DEBRIS AND SHALL BE DRY AND CLEAN WHEN THE TACK COAT IS APPLIED. TACK COAT SHALL BE PLACED SUFFICIENTLY AHEAD OF THE PAVING OPERATION TO ALLOW FOR CURING. PAVING AND CONSTRUCTION EQUIPMENT SHALL NOT BE PERMITTED ONTO THE TACK COAT UNTIL IT HAS SET. TACK COAT MATERIAL SHALL CONSIST OF SS–1 EMULSIFIED ASPHALT DILUTED WITH AN EQUAL VOLUME OF WATER. THE UNDILUTED MATERIAL SHALL BE ACCORDING TO OPSS 1103.
6.11 SHAPE BASE TO SMOOTH CONTOUR AND COMPACT TO NOT LESS THAN 100% CORRECTED MAXIMUM DRY DENSITY BEFORE BEGINNING PAVING OPERATIONS.
6.12 APPLY ASPHALTIC CONCRETE ONLY WHEN BASE OR PREVIOUS COURSE IS DRY AND AIR TEMPERATURE IS ABOVE 5 DEG.C
6.13 ROLL UNTIL ROLLER MARKS ARE ELIMINATED AND COMPACTED TO NOT LESS THAN 95% OF DENSITY. COMPACT WITH HOT TAMPERS IN AREAS INACCESSIBLE TO A ROLLER. BEVEL EDGES ADJACENT TO GRANULAR SURFACES.
6.14 FINISH SURFACE SMOOTH, TRUE TO GRADE.
6.15 KEEP VEHICULAR TRAFFIC AND OTHER LOADS OFF NEWLY PAVED AREAS UNTIL 24 HOURS AFTER PAVING.
6.16 DIVERT UNUSED AND WASTE ASPHALT TO A FACILITY APPROVED FOR ACCEPTING SUCH MATERIALS.
6.17 APPLY TRAFFIC PAINT AS IDENTIFIED ON PLAN. TRAFFIC PAINT: NON–DARKENING, HOMOGENEOUS, UNIFORM AND SMOOTH, FREE FROM SKIN, DIRT AND OTHER FOREIGN PARTICLES. APPLY TO DRY PAVEMENT SURFACE FREE FROM FROST, ICE, DUST, OIL, GREASE AND OTHER FOREIGN MATERIALS. PROTECT PAVEMENT MARKINGS UNTIL DRY.

OWNER:
STOKED INDUSTRIES INC
14 KNOLL TERRACE,
NEPEAN ON
K2J 2K6

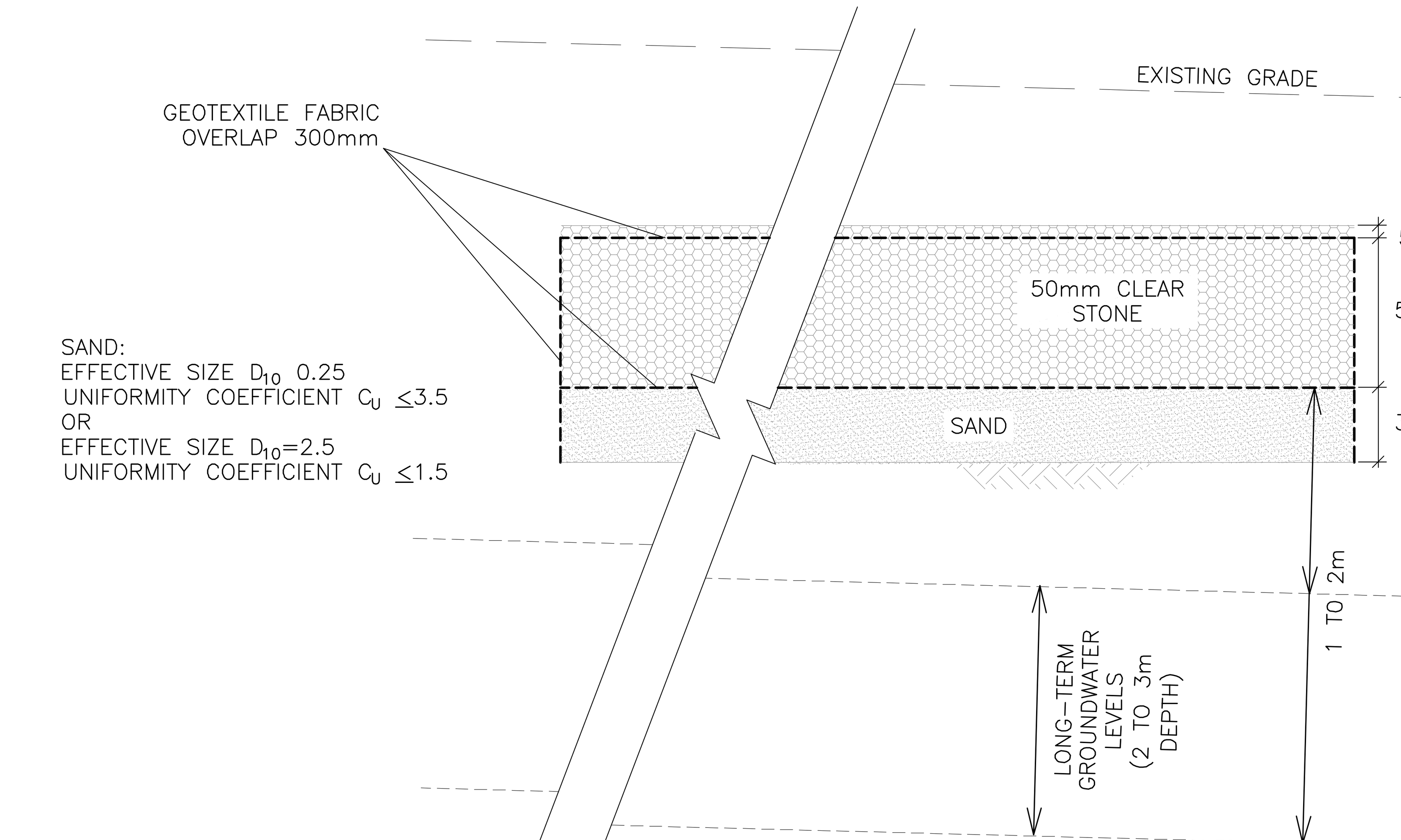

INFILTRATION TRENCH
(INSTALL AT THE END OF CONSTRUCTION)
N.T.S.

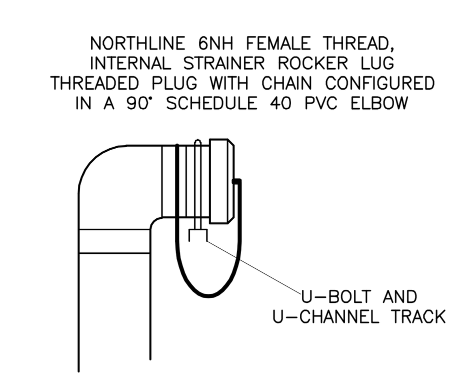

DRAW PIPE
AS PER FIRE DEPARTMENT SPECIFICATIONS
N.T.S.

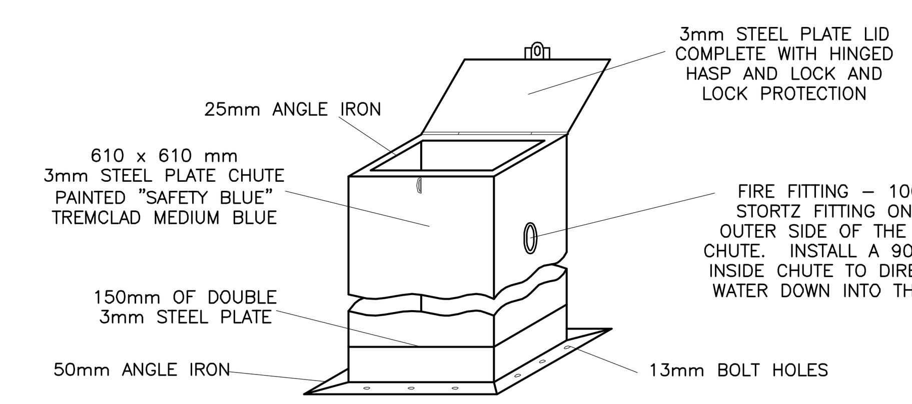

WATER CHUTE
AS PER FIRE DEPARTMENT SPECIFICATIONS
N.T.S.

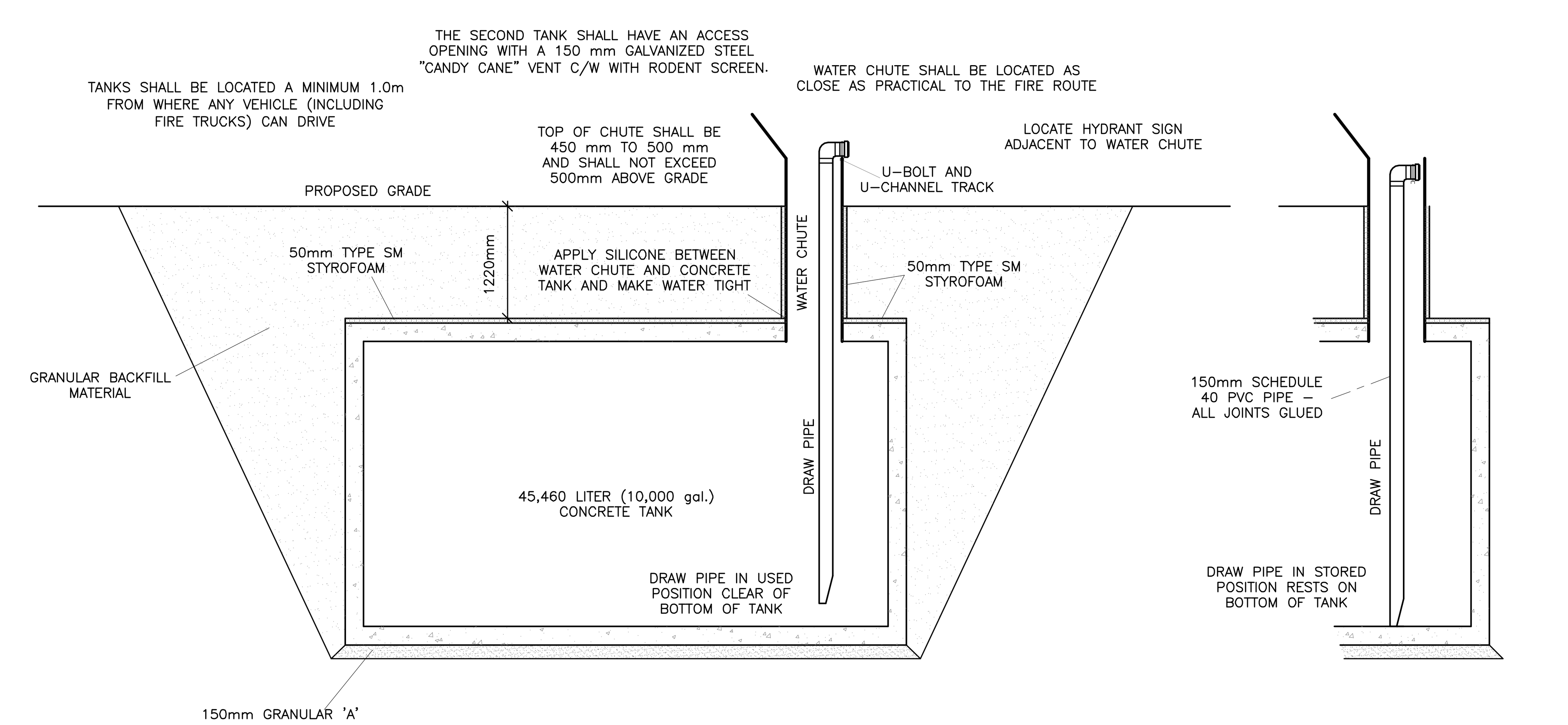

WATER FILL STATION
(WATER SUPPLY FOR FIRE PROTECTION)
AS PER FIRE DEPARTMENT SPECIFICATIONS
N.T.S.

LEGEND

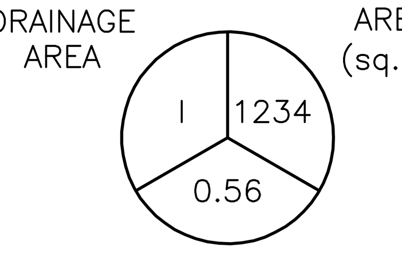

DRAINAGE AREA
AREA (sq.m)
5 YEAR RUNOFF COEFFICIENT

DRAINAGE PATTERN

KEY PLAN

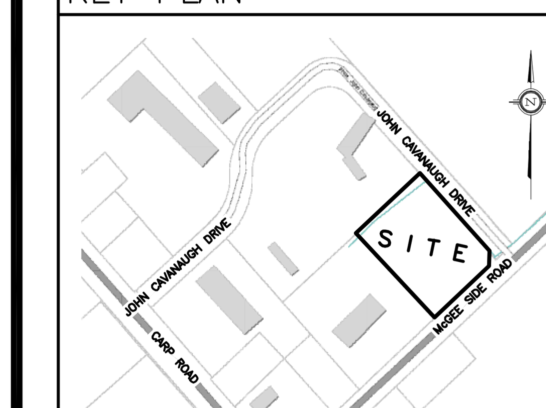

No.	DATE	REVISION
7	DEC 21–23	RE–ISSUED FOR APPROVAL
6	AUG 10–23	RE–ISSUED FOR APPROVAL
5	JUN 29–23	RE–ISSUED FOR APPROVAL
4	JUN 23–23	ISSUED FOR COORDINATION
3	APR 19–23	ISSUED FOR CLIENT REVIEW
2	JUN 14–21	RE–ISSUED FOR APPROVAL
1	MAR 12–21	ISSUED FOR APPROVAL

D. B. GRAY ENGINEERING INC.
Stormwater Management - Grading & Drainage - Storm & Sanitary Sewers - Watermains
700 Long Point Circle 613-425-8044
Ottawa, Ontario d.gray@dbgrayengineering.com

Project
OFFICE & WAREHOUSE
2167 McGEE SIDE ROAD
OTTAWA, ONTARIO

Drawing Title
NOTES & DETAILS

Engineer's Seal
LICENSED PROFESSIONAL ENGINEER
D.B. GRAY
17016502
DEC 21–23
PROVINCE OF ONTARIO
NOT VALID UNLESS SIGNED & DATED

Drawn	D.B.G
Hor. Scale	1:250
Vert. Scale	
Date	APR 19–23
Job No.	23024

Drawing No.
C–6
of 7