LEGEND

- SITE BOUNDARY
- MAXIMUM 3:1 SIDESLOPE
- PROPOSED CENTRELINE SWALE
- HYD — PROPOSED HYDRANT LOCATION
- 412P — PROPOSED SANITARY MANHOLE
- 826 — PROPOSED STORM MANHOLE
- CBMH 101 — PROPOSED CATCHBASIN MANHOLE INSERT
- PROPOSED CATCHBASIN INSERT
- PROPOSED SILT FENCE (SEE OPSD 219.110)
- PROPOSED MUD MAT
- PROPOSED STRAW BALE (SEE OPSD 219.180)

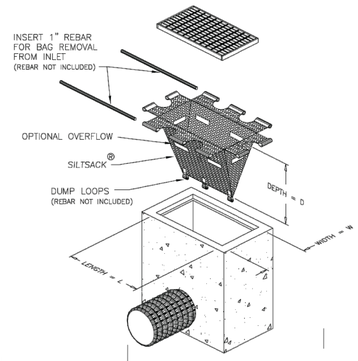

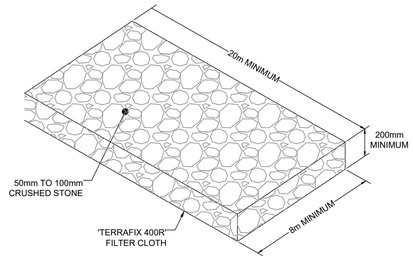

MUD MAT DETAIL
NTS

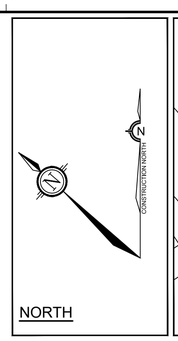

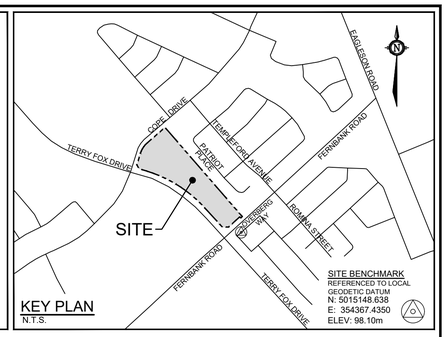

KEY PLAN
N.T.S.

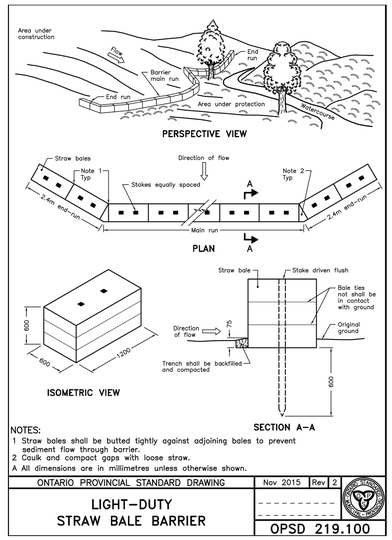

NOTES:
1 Straw bales shall be butted tightly against adjoining bales to prevent sediment flow through barrier.
2 Caulk and compact gaps with loose straw.
A All dimensions are in millimetres unless otherwise shown.

ONTARIO PROVINCIAL STANDARD DRAWING	Nov 2015	Rev 2
LIGHT–DUTY STRAW BALE BARRIER	OPSD 219.100	

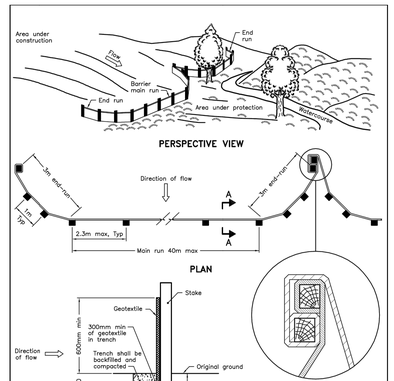

NOTE:
A All dimensions are in millimetres unless otherwise shown.

ONTARIO PROVINCIAL STANDARD DRAWING	Nov 2015	Rev 2
LIGHT–DUTY SILT FENCE BARRIER	OPSD 219.110	

REFER TO 121011-NLD FOR ADDITIONAL NOTES

NOTE:
THE POSITION OF ALL POLE LINES, CONDUITS, WATERMAINS, SEWERS AND OTHER UNDERGROUND AND OVERGROUND UTILITIES AND STRUCTURES IS NOT NECESSARILY SHOWN ON THE CONTRACT DRAWINGS, AND WHERE SHOWN, THE ACCURACY OF THE POSITION OF SUCH UTILITIES AND STRUCTURES IS NOT GUARANTEED. BEFORE STARTING WORK, DETERMINE THE EXACT LOCATION OF ALL SUCH UTILITIES AND STRUCTURES AND ASSUME ALL LIABILITY FOR DAMAGE TO THEM.

PRELIMINARY
NOT FOR
CONSTRUCTION

No.	REVISION	DATE	BY
1.	ISSUED FOR CITY OF OTTAWA REVIEW	JUN 2/21	DDB

SCALE 1:750

DESIGN	DDB
CHECKED	MSP
DRAWN	AE
CHECKED	DDB
APPROVED	MSP

FOR REVIEW ONLY

LICENSED PROFESSIONAL ENGINEER
D. D. BLAIR
100122737
June 8 2021
PROVINCE OF ONTARIO

NOVATECH
Engineers, Planners & Landscape Architects
Suite 200, 240 Michael Cowpland Drive
Ottawa, Ontario, Canada K2M 1P6
Telephone (613) 254-9643
Facsimile (613) 254-5867
Website www.novatech-eng.com

CITY OF OTTAWA
5331 FERNBANK ROAD
FERNBANK ZENS

DRAWING NAME
EROSION AND SEDIMENT CONTROL PLAN

PROJECT No. 121011-00
REV REV # 1
DRAWING No. 121011-ESC

M:\2021\121011\CAD\Design\121011-ESC.dwg, ESC, Jun 02, 2021 - 2:31pm, mmckeough

PLAN41.DWG - 841mmx594mm