817 Roseview Avenue Ottawa

Assessment of Adequacy of Public Services

Project # CW-04-21

Prepared for:

OWNER

By:

Arch-Nova Design Inc.

September 2021

City of Ottawa File #: D00-00-00-0000

817 Roseview Avenue Ottawa

Assessment of Adequacy of Public Services

Project # CW-04-21

Prepared for:

OWNER

By:

Arch-Nova Design Inc.

September 2021

City of Ottawa File #: D00-00-00-0000

Table of Contents

1. Introduction....2
2. Public Services Capacity....2
   2.1 Water Supply....2
   2.2 Water Supply for Proposed Development....4
   2.3 Sanitary Sewer....5
   2.4 Sanitary Sewer for Proposed Development....5
3. Stormwater....5
   3.1 Existing Site Stormwater Services....6
   3.2 Stormwater for Proposed Development....6
   3.3 Proposed Grading....7
4. Conclusion and Recommendation....7
   4.1 Water Supply....7
   4.2 Sanitary Sewer....7
   4.3 Stormwater....7

Appendix A: Calculations
Appendix B: Correspondence
Appendix C: Guidelines, Existing Reports and Studies

1. Introduction

The subject property is located at 817 Roseview Avenue, Ottawa. The proposed work comprises of a 4-storey+basement apartment building. For the purpose of this report the site is considered to run east-west.

Currently the property is used as a single house property with a garage at rear. Adjacent properties are residential with a municipal park on its east side.

The area is serviced by municipal water (200 mm, 200 mm sanitary sewer and 1050 mm storm sewer. The street in front of the property is at elevation between 65.69 and 65.83 m.a.s.l.

Arvic Gilmour Ave
Arvic Gilmour Ave
W. Roseview Ave
W. Roseview Ave
W. Roseview

Max Day + FF = 101.3 m assuming a fire flow of 150 L/s

Minimum HGL = 107.4 m

Maximum HGL = 115.6 m, the estimated ground elevation is 65.75 m, the maximum pressure is estimated to be more than 80 psi.

Table 1 presents the City of Ottawa design criteria based on MOE Guidelines.

Design Parameter	Value
Residential Average Apartment	1.8 P/unit
Residential Average Daily Demand	280 L/d/P**
Residential Maximum Daily Demand	2.5 x Average Daily *
Residential Maximum Hourly	2.2 x Maximum Daily *
Commercial Demand	2.5 L / m2 /d
Commercial Maximum Daily Demand	1.5 x Average Daily
Commercial Maximum Hourly	1.8 x Maximum Daily
Minimum Watermain Size	150mm diameter
Minimum Depth of Cover	2.4m from top of watermain to finished grade
During Peak Hourly Demand operating pressure must remain within	275kPa and 552kPa
During fire flow operating pressure must not drop below	140kPa

* Residential Max. Daily and Max. Hourly peaking factors per MOE Guidelines for Drinking-Water Systems Table 3-3 for 0 to 500 persons.
** Daily consumption rate to align with the revised wastewater rates identified by City of Ottawa Technical Bulletin ISTB-2018-03. As a result, "Arch-Nova" is proposing for a deviation from the Water Supply Guidelines

Table 1: Water Supply Design Criteria

Current water consumption is **0.16 l/sec** and expected consumption fir the new development is **1.552 L/sec)** for peak period. The fire flow for residential spaces was estimated to be 9,000 l/min (150 l/sec). The City confirmed that the system can provide required fire flow at nearest hydrant.

The table below summarizes the pressure for the designed parameters:

Design Parameter	Anticipated Demand[1] (L/sec)	Boundary Condition[2] (m)
Average Daily Demand	0.11	115.6
Max Day + Fire Flow	151.03	101.3
Peak Hour	1.55	107.4

[1)] Water demand calculation per Water Supply Guidelines. See Appendix B for detailed calculations.

[2)] Boundary conditions supplied by the City of Ottawa. See Appendix B for correspondence with the City.

Table 2: Water Demand and Boundary Conditions

2.2 Water Supply for Proposed Development

The new building will comprise of 20 apartments with central mechanical room. Peak flow requirement is calculated to be **1.552 l/sec.** A 11.0 m 50 mm diameter water lateral is proposed and it will serve for only domestic use. Total pressure loss at the building connection is calculated to be 0.02 bar. Linear loss inside the building is estimated to 1.08 bar. Top elevation of the building is at 79,81 m.a.s.l. The water pressure at the top level will be 27.69 m (2.7 bar) which is sufficient (1 bar minimum required).

817 Roseview Avenue: hydrant location and distance

Fire protection will be provided from the nearest hydrant (52.8 m) at pressure of 101.3 m and it can reach the top of the building (79.81 m).

2.3 Sanitary Sewer

Current outflow for the existing building is 0.0787 **l/sec** (peak flow+wet weather).

Design Parameter	Value
Residential Average Apartment	1.8 P/unit
Average Daily Demand	280 L/d/per
Peaking Factor	Harmon's Peaking Factor. Max 4.0, Min 2.0
Commercial Space	5L/m2/day
Infiltration and Inflow Allowance	0.28L/s/ha
Sanitary sewers are to be sized employing the Manning's Equation	$Q = (1/n)AR^{2/3}S^{1/2}$
Minimum Sewer Size	200mm diameter
Minimum Manning's 'n'	0.013
Minimum Depth of Cover	2.5m from crown of sewer to grade
Minimum Full Flowing Velocity	0.6m/s
Maximum Full Flowing Velocity	3.0m/s

Table 3: Wastewater Design Criteria

Existing municipal sewer 200 mm has a capacity of 21.96 l/sec for 0.4% slope and 80% full.

Detailed calculation of flow is presented in Appendix A.

2.4 Sanitary Sewer for Proposed Development

The new building will comprise of 20 apartments. Peak flow plus wet weather outflow is calculated to be **0.46 l/sec.**

Proposed 200 mm sanitary lateral will provide sufficient outflow capacity where minimum self-cleansing velocity can be achieved at 0.5 l/sec outflow at 1.5%. Detailed calculation of flow is presented in Appendix A.

3. Stormwater

3.1 Existing Site Stormwater Services

Currently the property is draining toward east and west (street). No other storm water services (i.e. storage, ponds) are on the property.

Surface Type	ID	Area (ha)	Percent of total Area	C	A X C (ha)
Green Area/Yard	A1	0.09400	83.2%	0.30	0.028
Driveway	A2	0.00400	3.5%	0.80	0.003
Pathway	A3	0.00200	1.8%	0.40	0.001
House	A4	0.0100	8.8%	0.95	0.010
Deck	A5	0.0030	2.7%	0.40	0.001
TOTAL		0.1130	100.0%		0.043
Weighted C =					0.38

Table 4: Current Drainage Areas

Entire site drains uncontrolled over surface and calculated C=0.38 is used for the calculation for the post development calculation.

A municipal stormwater service 1050 mm is provided on Roseview Avenue. Also, along the south border of the property there is an easement for the 675 storm drainage pipe from the adjacent municipal park (east).

3.2 Stormwater for Proposed Development

The proposed 4-storey building and the parking and driveway will cover the most of the property so the outflow excess will be controlled on the site. The flat roof will be used as an amenity space for residents and the roof storage is not practical for this reason. An underground storage is proposed under rear open parking. Calculated storage capacity is 30.27 m^3. Proposed type of storage is “Stormtech” however any similar system should be considered. The roof outflow will be routed toward the parking. The roof and parking runoff will be routed to the storage over inlet manhole. The outflow manhole will be equipped with the outflow control device (capacity 3.54 l.sec). Detailed calculation is provided in Appendix A.

The drainage system comprises of weeping tiles around the building and connected to the stormwater storage. Details are presented in the Grading and Site Services Plan.

Existing drainage swale along Roseview Avenue will be maintained and a culvert 300 mm is proposed to be installed under the entrance ramp. Inlet and outlet inverts will match the invert elevations of existing culverts north and south from the location.

3.3 Proposed Grading

As the largest part of the property is to be covered with the building and parking-driveway area, the grading is proposed to serve the stormwater routing to the underground storage. The east and south border will be edged with a curb stones so the spillover to adjacent properties will be prevented. The driveway along the building will be sloped toward entrance to the site and will provide an emergency overflow for the rear parking.

Existing drainage swale along the street is to be maintained.

4. Conclusion and Recommendation

4.1 Water Supply

The water supply demand calculation is based on the fire flow requirement for residential buildings; it is 9,000 l/min (150 l/sec). The City personnel provided information that capacity and pressure at nearest hydrant are available with about 21,5 m of pressure over the top of the building.

Domestic water supply flow and pressure are sufficient and pressure at the top floor will be 2.7 bars (min 1.0 bar).

4.2 Sanitary Sewer

Proposed 200 mm sanitary lateral will provide sufficient outflow capacity where minimum self-cleansing velocity can be achieved at 0.5 l/sec outflow at 1.5%. Receiving Sanitary pipe is 200 mm AC pipe with capacity of 21.9 l/sec for 80%

full and 0.4% slope. Increase of 0.39 l/sec of inflow will make 2% of capacity of the receiving pipe.

4.3 Stormwater

The increase in runoff from the site will be managed by a stormwater storage on site so there will be no impact on the receiving system.

Drainage area and a storm calculation sheets (pre and post-development) are shown in Appendix A[2].

Based on the information provided by the City of Ottawa, the existing municipal services are adequate and will not be overloaded after the construction of the buildings at 26 McArthur.

Prepared by:

_____

Zoran Mrdja, P.Eng.

September, 2021

LICENSED PROFESSIONAL ENGINEER
Z. MRDJA
PROVINCE OF ONTARIO

Professional Engineers Ontario

Authorized by Professional Engineers of Ontario to provide professional services to public

[2] Post Development calculation:

Appendix A: Calculations

Water Supply Design Criteria

Design Parameter	Value
Residential Average Apartment	1.8 P/unit
Residential Average Daily Demand	350 L/d/P
Residential Maximum Daily Demand	9.5 x Average Daily *
Residential Maximum Hourly	1.5 x Maximum Daily *
Commercial Demand	2.5 L / m2 /d
Commercial Maximum Daily Demand	1.5 x Average Daily
Commercial Maximum Hourly	1.8 x Maximum Daily
Minimum Watermain Size	150mm diameter
Minimum Depth of Cover	2.4m from top of watermain to finished grade
must remain within	275kPa and 552kPa (40-80 psi; 28-56m)
During fire flow operating pressure must not drop below	140kPa (20 psi; 14 m)
* Residential Max. Daily and Max. Hourly peaking factors per MOE Guidelines for Drinking-Water Systems Table 3-3 for 0 to 500 persons.	

817 Roseview Ave, Ottawa
Current

Domestic Demand

Type of Housing	Per / Unit	Units	Pop
Single Family	3.4	1	3
Semi-detached	2.7		0
Townhouse	2.7		0
Apartment			0
Bachelor	1.4	0	0
1 Bedroom	1.4	0	0
2 Bedroom	2.1	0	0
3 Bedroom	3.1		0
4 Bedroom	4.2	0	0

	Pop	Avg. Daily		Max Day		Peak Hour	
		m^3/d	L/sec	m^3/d	L/sec	m^3/d	L/sec
Total Domestic Demand	3	0.95	0.01	9.04	0.10	13.57	0.16

Institutional / Commercial / Industrial Demand

				Avg. Daily		Max Day		Peak Hour	
Property Type	**Unit Rate**		**Units**	m^3/d	L/sec	m^3/d	L/sec	m^3/d	L/sec
Commercial floor space	2.5	$L/m^2/d$	0	0.00	0.00	0.00	0.00	0.00	0.00
Office	75.0	$L/9.3m^2/d$	0.0	0.00	0.000	0.00	0.0000	0.00	0.0000
Restaurant*	125.0	L/seat/d							
Industrial -Light	35,000.0	L/gross ha/d							
Industrial -Heavy	55,000.0	L/gross ha/d							
			Total I/C/I Demand	0.00	0.00	0.00	0.00	0.00	0.00

Total Demand	0.95	0.01	9.04	0.10	13.57	0.16

* Estimated number of seats at 1seat per $9.3m^2$

Water Demand and Boundary Conditions
Proposed Conditions

Design Parameter	Anticipated Demand[1] (L/sec)	Boundary Condition[2] (kPa)
Average Daily Demand	0.01	
Max Day + Fire Flow	9,000.10	
Peak Hour	0.16	

1) Water demand calculation per Water Supply Guidelines. See Appendix B for detailed calculations.

2) Boundary conditions supplied by the City of Ottawa. See Appendix B for correspondence with the City.

Wastewater Design Criteria

Design Parameter	Value
Residential Average Apartment	1.8 P/unit
Average Daily Demand	280 L/cap/day
Peaking Factor	Harmon's Peaking Factor. Max 4.0, Min 2.0
Correction Factor (City of Ottawa Tech.Bulletin ISTB-2018-0	0.8
Commercial Space	28,000 L/ha/day
Infiltration and Inflow Allowance	0.28L/s/ha
Sanitary sewers are to be sized employing the Manning's Equation	$Q = (1/n)AR^{2/3}S^{1/2}$
Minimum Sewer Size	200mm diameter
Minimum Manning's 'n'	0.013
Minimum Depth of Cover	2.5m from crown of sewer to grade
Minimum Full Flowing Velocity	0.6m/s
Maximum Full Flowing Velocity	3.0m/s
Extracted from Sections 4 and 6 of the City of Ottawa Sewer Design Guidelines, November 2012.	

817 Roseview Ave, Ottawa
Current

Sanitary Sewer Post Development Outflow

Site Area	**0.110 ha**
Extraneous Flow Allowances	
Infiltration / Inflow	**0.0363 L/s**

Domestic Contributions

Unit Type	Unit Rate	Units	**Pop**
Single Family	3.4	1	3.4
Semi-detached and duplex	2.7		0
Duplex	2.3		0
Townhouse	2.7		0
Apartment			
Bachelor	1.4		0
1 Bedroom	1.4	0	0
2 Bedroom	2.1	0	0
3 Bedroom	3.1	0	0
4 Bedroom	4.2	0	0
		Total Population	**3.4**
		Average Domestic Flow	**0.01 L/s**
		Peaking Factor	**3.8**
		Peak Domestic Flow	**0.04 L/s**

Institutional / Commercial / Industrial Contributions

Property Type	**Unit Rate**	**No. of Units**	**Avg Wastewater (L/s)**
Commercial	28,000 L/gross ha/d	0	0.0000
Office	75 L/9.3m2/d	0	0.0000
Institutional	28,000 L/gross ha/d	0	0.00
Industrial - Light	35,000 L/gross ha/d	0	0.00
Industrial - Heavy	55,000 L/gross ha/d	0	0.00
		Average I/C/I Flow	**0.0000**
		Peak Institutional / Commercial Flow*	**0.0000**
		Peak Industrial Flow**	**0.0000**
		Peak I/C/I Flow	**0.0000**

Total Estimated Average Dry Weather Flow Rate	**0.0110**
Total Estimated Peak Dry Weather Flow Rate	**0.0424**
Total Estimated Peak Wet Weather Flow Rate	**0.0787**

Ottawa TechBulletin ISTB-2018-01 Section 4.4.1 Page 4.5
**Use Apendix 4B diagram

Water Supply Design Criteria

Design Parameter	Value
Residential Average Apartment	1.8 P/unit
Residential Average Daily Demand	350 L/d/P
Residential Maximum Daily Demand	9.5 x Average Daily *
Residential Maximum Hourly	1.5 x Maximum Daily *
Commercial Demand	2.5 L / m2 /d
Commercial Maximum Daily Demand	1.5 x Average Daily
Commercial Maximum Hourly	1.8 x Maximum Daily
Minimum Watermain Size	150mm diameter
Minimum Depth of Cover	2.4m from top of watermain to finished grade
must remain within	275kPa and 552kPa (40-80 psi; 28-56m)
During fire flow operating pressure must not drop below	140kPa (20 psi; 14 m)
* Residential Max. Daily and Max. Hourly peaking factors per MOE Guidelines for Drinking-Water Systems Table 3-3 for 0 to 500 persons.	

817 Roseview Ave, Ottawa
New

Domestic Demand

Type of Housing	Per / Unit	Units	Pop
Single Family	3.4	0	0
Semi-detached	2.7		0
Townhouse	2.7		0
Apartment			0
Bachelor	1.4	0	0
1 Bedroom	1.4	12	17
2 Bedroom	2.1	8	17
3 Bedroom	3.1		0
4 Bedroom	4.2	0	0

	Pop	Avg. Daily		Max Day		Peak Hour	
		m^3/d	L/sec	m^3/d	L/sec	m^3/d	L/sec
Total Domestic Demand	34	9.41	0.11	89.38	1.03	134.06	1.55

Institutional / Commercial / Industrial Demand

				Avg. Daily		Max Day		Peak Hour	
Property Type	**Unit Rate**		**Units**	m^3/d	L/sec	m^3/d	L/sec	m^3/d	L/sec
Commercial floor space	2.5	$L/m^2/d$	0	0.00	0.00	0.00	0.00	0.00	0.00
Office	75.0	$L/9.3m^2/d$	9.3	0.08	0.001	0.11	0.0013	0.20	0.0023
Restaurant*	125.0	L/seat/d							
Industrial -Light	35,000.0	L/gross ha/d							
Industrial -Heavy	55,000.0	L/gross ha/d							
			Total I/C/I Demand	0.08	0.00	0.11	0.00	0.20	0.00

Total Demand	9.48	0.11	89.49	1.04	134.27	1.554

* Estimated number of seats at 1seat per $9.3m^2$

Water Demand and Boundary Conditions
Proposed Conditions

Design Parameter	Anticipated Demand[1] (L/sec)	Boundary Condition[2] (kPa)
Average Daily Demand	0.11	
Max Day + Fire Flow	151.03	
Peak Hour	1.55	

[1)] Water demand calculation per Water Supply Guidelines. See Appendix B for detailed calculations.

[2)] Boundary conditions supplied by the City of Ottawa. See Appendix B for correspondence with the City.

Wastewater Design Criteria

Design Parameter	Value
Residential Average Apartment	1.8 P/unit
Average Daily Demand	280 L/cap/day
Peaking Factor	Harmon's Peaking Factor. Max 4.0, Min 2.0
Correction Factor (City of Ottawa Tech.Bulletin ISTB-2018-0	0.8
Commercial Space	28,000 L/ha/day
Infiltration and Inflow Allowance	0.28L/s/ha
Sanitary sewers are to be sized employing the Manning's Equation	$Q = (1/n)AR^{2/3}S^{1/2}$
Minimum Sewer Size	200mm diameter
Minimum Manning's 'n'	0.013
Minimum Depth of Cover	2.5m from crown of sewer to grade
Minimum Full Flowing Velocity	0.6m/s
Maximum Full Flowing Velocity	3.0m/s
Extracted from Sections 4 and 6 of the City of Ottawa Sewer Design Guidelines, November 2012.	

817 Roseview Ave, Ottawa
New

Sanitary Sewer Post Development Outflow

Site Area		**0.110 ha**
Extraneous Flow Allowances		
	Infiltration / Inflow	**0.0363 L/s**

Domestic Contributions

Unit Type	Unit Rate	Units	**Pop**
Single Family	3.4	0	0
Semi-detached and duplex	2.7		0
Duplex	2.3		0
Townhouse	2.7		0
Apartment			
Bachelor	1.4		0
1 Bedroom	1.4	12	16.8
2 Bedroom	2.1	8	16.8
3 Bedroom	3.1	0	0
4 Bedroom	4.2	0	0
		Total Population	**33.6**
		Average Domestic Flow	**0.11 L/s**
		Peaking Factor	**3.9**
		Peak Domestic Flow	**0.43 L/s**

Institutional / Commercial / Industrial Contributions

Property Type	**Unit Rate**	**No. of Units**	**Avg Wastewater (L/s)**
Commercial	28,000 L/gross ha/d	0	0.0000
Office	75 L/9.3m2/d	9.3	0.0081
Institutional	28,000 L/gross ha/d	0	0.00
Industrial - Light	35,000 L/gross ha/d	0	0.00
Industrial - Heavy	55,000 L/gross ha/d	0	0.00
		Average I/C/I Flow	**0.0081**
		Peak Institutional / Commercial Flow*	**0.0000**
		Peak Industrial Flow**	**0.0000**
		Peak I/C/I Flow	**0.0000**

Total Estimated Average Dry Weather Flow Rate	**0.1170**
Total Estimated Peak Dry Weather Flow Rate	**0.4297**
Total Estimated Peak Wet Weather Flow Rate	**0.4660**

Ottawa TechBulletin ISTB-2018-01 Section 4.4.1 Page 4.5
**Use Apendix 4B diagram

Fire Flow Calculation Ontario Building Code 2006 (Appendix A)

Project: 817 Roseview Ave, Ottawa

Date: **July 7, 2021**
Data input by: Zoran Mrdja, P.Eng.

Type of Construction	Building Clasification	Water Supply Coefficient (K)
Non-combustable construction, or a heavy timber conforming to article 3.1.4.6	A-2; B1-; B-2; B-3 C; D	16

		Total Building Volume (V)(m3)
Building Height (incl.Basement)	15.85	7,068.62
Building Width	11.50	
Building Length	38.78	

Side	Exposure Distance (m)	Spatial Coefficient	Total Spatial Coefficient S_{tot}*
North	9.00	0.15	1.15
East	30.00	0	
South	13.00	0	
West	30.00	0	
	Total Volume of Water Required Q**	**130,062.69**	
	Minimum Required Fire Flow (L/min) ***	**4,335.42**	

Note:
* $S_{tot}= 1+(S_{side1}+S_{side2}+S_{side3}+S_{side4})$
** $V=KVS_{tot}$
*** Flow=Q/30 (min) for min. duration of 30 min

Summary:

2. Nearest fire hydrant distance

52.8m;

FUS Fire Flow Calculations

Project: 349 Danforth Ave, Ottawa

Calculations Based on 1999 Publication "Water Supply for Public

Fire Protection " by Fire Underwriters' Survey (FUS)

Fire Flow Calculation #: 1

Date: **2021-07-07**

Building Type/Description/Name: Apartment building

Data input by: Zoran Mrdja, P.Eng.

Table A: Fire Underwriters Survey Determination of Required Fire Flow - Long Method

Step	Task	Term	Options	Multiplier Associated with Option	Choose:	Value Used	Unit	Total Fire Flow (L/min)
		Framing Material						
1	Choose Frame Used for Construction of Unit	Coefficient related to type of construction (C)	Wood Frame	1.50	Ordinary Construction	1.00		
			Ordinary construction	1.00				
			Non-combustible construction	0.80				
			Fire resistive construction (< 2 hrs)	0.70				
			Fire resistive construction (> 2 hrs)	0.60				
		Floor Space Area						
2	Choose Type of Housing (if TH, Enter Number of Units Per TH Block)	Type of Housing	Single Family	1	Other (Comm, ind)	4	Units	
			Townhouse - indicate # of units	1				
			Other (Comm, Ind, etc.)	1				
2.2	# of Storeys	Number of Floors/ Storeys in the Unit (do not include basement):			4	4	Storeys	
3	Enter Ground Floor Area of One Unit	Enter Ground Floor Area (A) of One Unit Only :			366	1010	Area in Square Meters (m^2)	
		Measurement Units	Square Feet (ft^2)	0.093	Square Metres (m2)			
			Square Metres (m^2)	253				
			Hectares (ha)	10000				
4	Obtain Required Fire Flow without Reductions	Required Fire Flow(without reductions or increases per FUS) (F = 220 * C * √A) Round to nearest 1000L/min						6,992
5	Apply Factors Affecting Burning	Reductions/Increases Due to Factors Affecting Burning						
5.1	Choose Combustibility of Building Contents	Occupancy content hazard reduction or surcharge	Non-combustible	-0.25	Limited combustible	-0.15	N/A	-1,049
			Limited combustible	-0.15				
			Combustible	0.00				
			Free burning	0.15				
			Rapid burning	0.25				
5.2	Choose Reduction Due to Presence of Sprinklers	Sprinkler reduction	Complete Automatic Sprinkler Protection	-0.3	None	0.00	N/A	0
			None	0				
5.3	Choose Separation Distance Between Units	Exposure Distance Between Units	North Side	3.1-10 m	0.20	0.45	m	
			East Side	30.1-45 m	0.05			
			South Side	10.1-20 m	0.15			
			West Side	30.1-45 m	0.05			3,146
6	Obtain Required Fire Flow, Duration & Volume	Total Required Fire Flow, rounded to nearest 1000 L/min, with max/min limits applied:						9,000
		Total Required Fire Flow (above) in L/s:						150
		Required Duration of Fire Flow (hrs)						2.00
		Required Volume of Fire Flow (m^3)						1080

Note: The most current FUS document should be referenced before design to ensure that the above figures are consistent with the intent of the Guideline

Legend	
	Drop down menu - choose option, or enter value.
	No Information, No input required.

Note:

The most current FUS document should be referenced before design to ensure that the above figures are consistent with the intent of the Guideline.

Nearest fire hydrant distance 52.8m;

Pressure Drop Online-Calculator

Calculation output

Flow medium:	Water 20 °C / liquid
Volume flow::	1.552 l/s
Weight density:	998.206 kg/m³
Dynamic Viscosity:	1001.61 10-6 kg/ms
Element of pipe:	circular
Dimensions of element:	Diameter of pipe D: 50 mm Length of pipe L: 11 m
Velocity of flow:	0.79 m/s
Reynolds number:	39387
Velocity of flow 2:	-
Reynolds number 2:	-
Flow:	turbulent
Absolute roughness:	.0015 mm
Pipe friction number:	0.02
Resistance coefficient:	4.87
Resist.coeff.branching pipe:	-
Press.drop branch.pipe:	-
Pressure drop:	15.19 mbar 0.02 bar

Note: The pressure drop was calculated by the online calculator of www.pressure-drop.com. We can not warrant the correctness of this software. The software is produced carefully. But no computer software is without bugs. Therefore the calculations are your own risk.
****

Do you know our software SF Pressure Drop 10.x for Excel?
Information: www.pressure-drop.com
****

Pressure Drop Online-Calculator

Calculation output

Flow medium:	Water 20 °C / liquid
Volume flow::	1.5 l/s
Weight density:	998.206 kg/m³
Dynamic Viscosity:	1001.61 10-6 kg/ms
Element of pipe:	circular
Dimensions of element:	Diameter of pipe D: 25 mm Length of pipe L: 30 m
Velocity of flow:	3.06 m/s
Reynolds number:	76135
Velocity of flow 2:	-
Reynolds number 2:	-
Flow:	turbulent
Absolute roughness:	.0015 mm
Pipe friction number:	0.02
Resistance coefficient:	23.19
Resist.coeff.branching pipe:	-
Press.drop branch.pipe:	-
Pressure drop:	1080.98 mbar 1.08 bar

Note: The pressure drop was calculated by the online calculator of www.pressure-drop.com. We can not warrant the correctness of this software. The software is produced carefully. But no computer software is without bugs. Therefore the calculations are your own risk.
****

Do you know our software SF Pressure Drop 10.x for Excel?
Information: www.pressure-drop.com
****

Manning Formula Uniform Pipe Flow at Given Slope and Depth

817 Roseview Avenue: 200 mm PVC at 1.5% slope

Inputs:

Pipe Diameter, d_o	200.0000	mm
Manning Roughness, n	0.0110	
Pressure slope (possibly equal to pipe slope), S_o	1.5000	% slope
Percent of (or ratio to) full depth (100% or 1 if flowing full)	7.0000	%

Results:

Flow, Q	0.4666	l/s
Velocity, v	0.4827	m/s
Velocity head, hv	0.0119	m
Flow Area, A	0.0010	m^2
Wetted Perimeter, P	0.1071	m
Hydraulic Radius	0.0090	m
Top Width, T	0.1021	m
Froude Number, F	1.58	
Shear Stress (tractive force), τ	2.0593	N/m^2

Manning Formula Uniform Pipe Flow at Given Slope and Depth

817 Roseview Avenue - Municipal Sanitary Sewer 200 mm AC

Inputs:

Pipe Diameter, d_o	200.0000	mm
Manning Roughness, n	0.0120	
Pressure slope (possibly equal to pipe slope), S_o	0.4000	% slope
Percent of (or ratio to) full depth (100% or 1 if flowing full)	80.0000	%

Results:

Flow, Q	21.9658	l/s
Velocity, v	0.8153	m/s
Velocity head, hv	0.0339	m
Flow Area, A	0.0269	m^2
Wetted Perimeter, P	0.4429	m
Hydraulic Radius	0.0608	m
Top Width, T	0.1600	m
Froude Number, F	0.63	
Shear Stress (tractive force), τ	6.2758	N/m^2

Version 2.0 (20 June 2017)

HawsEDC Calculators

ARCH-NOVA DESIGN INC.
Architecture Engineering Consulting

PRE-DEVELOPMENT

The pre-development time of concentration is 10 minutes

where:

$I_5 = 998.071 / (Tc + 6.053)^{0.814}$ $I_{100} = 1735.688 / (Tc + 6.014)^{0.820}$

I_5 = 104.2 mm/hr I_{100} = **178.6 mm/hr**

Surface Type	ID	Area (ha)	Percent of total Area	C	A X C (ha)
Green Area/Yard	A1	0.09400	83.2%	0.30	0.028
Driveway	A2	0.00400	3.5%	0.80	0.003
Pathway	A3	0.00200	1.8%	0.40	0.001
House	A4	0.0100	8.8%	0.95	0.010
Deck	A5	0.0030	2.7%	0.40	0.001
TOTAL		0.1130	100.0%		0.043
Weighted C =					0.38

$Q_{5pre} = (2.78)*(C)*(I_5)*(A)$

Q_{5pre} = 2.78 x 0.38 x 104.2 x 0.1130

Q_{5pre} = 12.44 L/s

$Q_{100pre} = (2.78)*(C)*(I_{100})*(A)$

Q_{100pre} = 2.78 x 0.48 x 178.6 x 0.1130

Q_{100pre} = 26.65 L/s

0.38 Actual C factor

POST-DEVELOPMENT (UNCONTROLLED RUNOFF)

The post-development time of concentration is 10 minutes

where:

$I_5 = 998.071 / (Tc + 6.053)^{0.814}$ $I_{100} = 1735.688 / (Tc + 6.014)^{0.820}$

I_5 = 104.2 mm/hr I_{100} = **178.6 mm/hr**

Surface Type	ID	Area (ha)	Percent of total Area	C	A X C (ha)
Driveway	A2	0.0150	46.9%	0.90	0.014
Yard/Sod	A3	0.0160	50.0%	0.25	0.004
Pathway	A4	0.0010	3.1%	0.50	0.001
TOTAL		0.0320	100.0%		0.018
Weighted C =					0.56

$Q_{5post} = (2.78)*(C)*(I_5)*(A)$

Q_{5post} = 2.78 x 0.56 x 104.2 x 0.0320

Q_{5post} = 5.19 L/s

$Q_{100post} = (2.78)*(C)*(I_{100})*(A)$

$Q_{100post}$ = 2.78 x 0.56 x 178.6 x 0.0320

$Q_{100post}$ = 8.90 L/s

0.56 Actual C factor

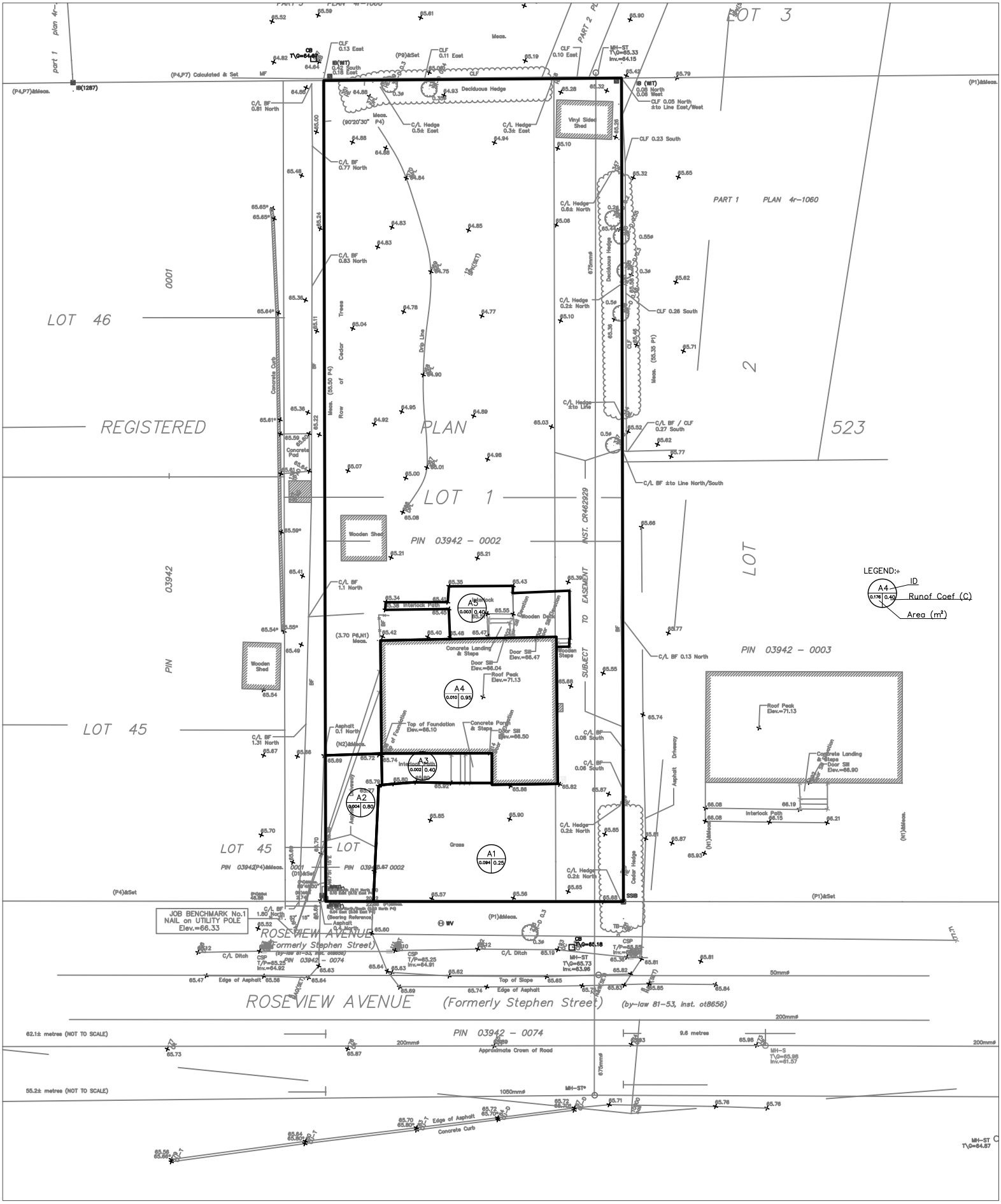

817 ROSEVIEW AVE.
SWM PREDEVELOPMENT

ARCH-NOVA Design Inc.
45 Banner Road NEPEAN ON K2H 8X5
613-702-3403 contact@archnova.ca

Project Number: CW-04-21 817 Roeseview Avenue, Ottawa

ARCH-NOVA DESIGN INC.
Architecture
Engineering
Consulting

PRE-DEVELOPMENT

The pre-development time of concentration is 10 minutes

where:

$I_5 = 998.071 / (Tc + 6.053)^{0.814}$ $I_{100} = 1735.688 / (Tc + 6.014)^{0.820}$

I_5 = 104.2 mm/hr I_{100} = **178.6 mm/hr**

Surface Type	ID	Area (ha)	Percent of total Area	C	A X C (ha)
		0.00000	0.0%	0.95	0.000
		0.00000	0.0%	0.95	0.000
		0.00000	0.0%	0.70	0.000
TOTAL		0.0000	0.0%		0.000
Weighted C =					0.00

$Q_{5pre} = (2.78)*(C)*(I_5)*(A)$

Q_{5pre} = 2.78 x 0.00 x 104.2 x 0.0000

Q_{5pre} = 0.00 L/s

$Q_{100pre} = (2.78)*(C)*(I_{100})*(A)$

Q_{100pre} = 2.78 x 0.00 x 178.6 x 0.0000

Q_{100pre} = 0.00 L/s

POST-DEVELOPMENT (CONTROLLED RUNOFF)

The post-development time of concentration is 10 minutes

where:

$I_5 = 998.071 / (Tc + 6.053)^{0.814}$ $I_{100} = 1735.688 / (Tc + 6.014)^{0.820}$

I_5 = 104.2 mm/hr I_{100} = **178.6 mm/hr**

Surface Type	ID	Area (ha)	Percent of total Area	C	A X C (ha)
Building	**A1**	0.04600	56.8%	0.95	0.044
Parking	**A5**	0.03500	43.2%	0.95	0.033
TOTAL		0.08100	0.0%		0.077
Weighted C =					0.95

$Q_{5post} = (2.78)*(C)*(I_5)*(A)$

Q_{5post} = 2.78 x 0.95 x 104.2 x 0.0810

Q_{5post} = 22.29 L/s

$Q_{100post} = (2.78)*(C)*(I_{100})*(A)$

$Q_{100post}$ = 2.78 x 0.95 x 178.6 x 0.0810

$Q_{100post}$ = 38.21 L/s

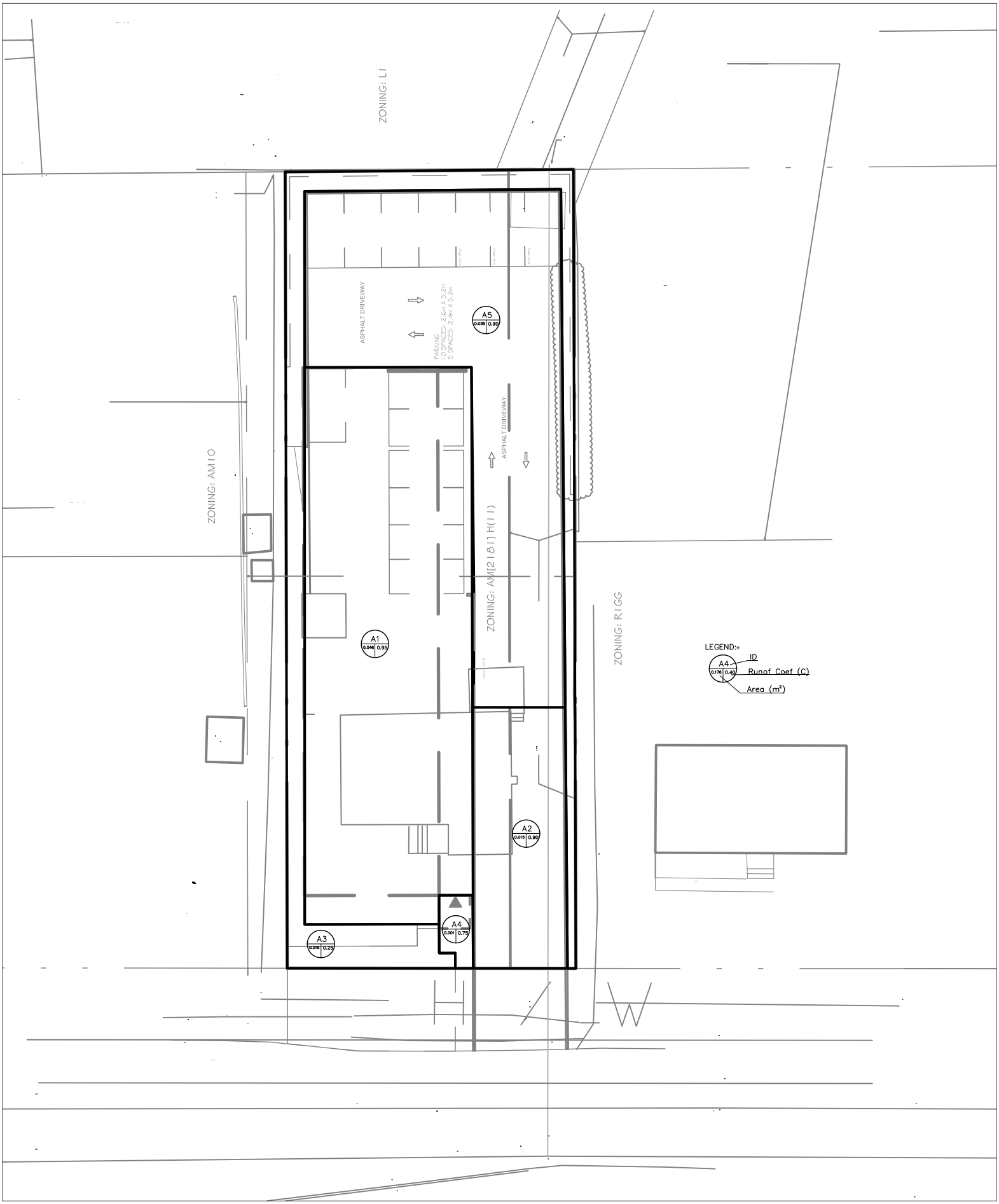

817 ROSEVIEW AVE.
SWM POSTDEVELOPMENT

ARCH-NOVA Design Inc.
45 Banner Road NEPEAN ON K2H 8X5
613-702-3403 contact@archnova.ca

ALLOWABLE RUNOFF

Predevelopment Runoff:		
Uncontrolled Runoff		
5-year	12.44	l/sec
100-year	26.65	l/sec
Controlled Runoff:		
5-year	0.00	l/sec
100-year	0.00	l/sec

Postdevelopment Runoff:		
Uncontrolled Runoff		
5-year	5.19	l/sec
100-year	8.90	l/sec
Controlled Runoff:		
5-year	22.29	l/sec
100-year	38.21	l/sec

Controlled allowable runoff		
	3.54	**l/sec**

Comment:

Storage Volumes (5-Year Storm)

Project : 817 Roeseview Avenue, Ottawa

Tc = 10 (mins)
C_{AVG} = 0.95 (dimmensionless)
Area = 0.0810 (hectares)
Storm = 5 (year)
Release Rate = 3.54 (L/sec)
Time Interval = 30 (mins)

Duration (min)	Rainfall Intensity (mm/hr)	Peak Flow (L/sec)	Release Rate (L/sec)	Storage Rate (L/sec)	Storage (m^3)
1	204	4.4	3.54		
31	53	11.3	3.54	7.74	14.40
61	33	7.0	3.54	3.42	12.52
91	24	5.2	3.54	1.61	8.80
121	19	4.1	3.54	0.60	4.33
151	16	3.5	3.54	-0.06	-0.54
181	14	3.0	3.54	-0.52	-5.66
211	13	2.7	3.54	-0.87	-10.96
241	11	2.4	3.54	-1.13	-16.38
271	10	2.2	3.54	-1.35	-21.91
301	9	2.0	3.54	-1.52	-27.52
331	9	1.9	3.54	-1.67	-33.19
361	8	1.7	3.54	-1.80	-38.91
391	8	1.6	3.54	-1.90	-44.68
421	7	1.5	3.54	-2.00	-50.49
451	7	1.5	3.54	-2.08	-56.33
481	6	1.4	3.54	-2.16	-62.20
511	6	1.3	3.54	-2.22	-68.10
541	6	1.3	3.54	-2.28	-74.02
571	6	1.2	3.54	-2.33	-79.96
601	5	1.2	3.54	-2.38	-85.93
631	5	1.1	3.54	-2.43	-91.90
661	5	1.1	3.54	-2.47	-97.90
691	5	1.0	3.54	-2.51	-103.90
721	5	1.0	3.54	-2.54	-109.93
751	5	1.0	3.54	-2.57	-115.96
781	4	0.9	3.54	-2.60	-122.00
811	4	0.9	3.54	-2.63	-128.06

Notes

1) For a storm duration that is less than the time of concentration the peak flow is equal to the product of 2.78CIA and the ratio of the storm duration to the time of concentration.

2) Rainfall Intensity, I = 998.071 / (Tc + 6.053)^0.814 (5 year, City of Ottawa)
3) Peak Flow = Duration/Tc x 2.78 x C x I x A (Duration < Tc)
4) Peak Flow = 2.78 x C x I x A (Duration > Tc)
5) Storage = Duration x Storage Rate

Storage Volumes (100-Year Storm)

Tc = 10 (mins)
C_{AVG} = 0.95 (dimmensionless)
Area = 0.0810 (hectares)
Storm = 100 (year)
Release Rate = 3.54 (L/sec)
Time Interval = 30 (mins)

Duration (min)	Rainfall Intensity (mm/hr)	Peak Flow (L/sec)	Release Rate (L/sec)	Storage Rate (L/sec)	Storage (m^3)
1	351	7.5	3.54		
31	90	19.2	3.54	15.67	29.16
61	55	11.8	3.54	8.27	30.27
91	41	8.7	3.54	5.18	28.28
121	33	7.0	3.54	3.45	25.05
151	27	5.9	3.54	2.33	21.15
181	24	5.1	3.54	1.55	16.83
211	21	4.5	3.54	0.96	12.22
241	19	4.1	3.54	0.51	7.39
271	17	3.7	3.54	0.15	2.40
301	16	3.4	3.54	-0.15	-2.72
331	15	3.1	3.54	-0.40	-7.95
361	14	2.9	3.54	-0.61	-13.27
391	13	2.7	3.54	-0.80	-18.66
421	12	2.6	3.54	-0.95	-24.11
451	11	2.4	3.54	-1.09	-29.62
481	11	2.3	3.54	-1.22	-35.18
511	10	2.2	3.54	-1.33	-40.78
541	10	2.1	3.54	-1.43	-46.41
571	9	2.0	3.54	-1.52	-52.09
601	9	1.9	3.54	-1.60	-57.79
631	9	1.9	3.54	-1.68	-63.52
661	8	1.8	3.54	-1.75	-69.28
691	8	1.7	3.54	-1.81	-75.06
721	8	1.7	3.54	-1.87	-80.86
751	8	1.6	3.54	-1.92	-86.68
781	7	1.6	3.54	-1.97	-92.52
811	7	1.5	3.54	-2.02	-98.38

Notes

1) For a storm duration that is less than the time of concentration the peak flow is equal to the product of 2.78CIA and the ratio of the storm duration to the time of concentration.

2) Rainfall Intensity, I = 1735.688 / (Tc + 6.014)^0.820 (100 year, City of Ottawa)
3) Peak Flow = Duration/Tc x 2.78 x C x I x A (Duration < Tc)
4) Peak Flow = 2.78 x C x I x A (Duration > Tc)
5) Storage = Duration x Storage Rate

ARCH-NOVA DESIGN INC.
Architecture
Engineering
Consulting

PROJECT INFORMATION	
ENGINEERED PRODUCT MANAGER	
ADS SALES REP	
PROJECT NO.	

ADS™
Advanced Drainage Systems, Inc.

SiteASSIST™
FOR STORMTECH INSTRUCTIONS, DOWNLOAD THE INSTALLATION APP

817 ROSEVIEW

NEPEAN, CANADA

SC-740 STORMTECH CHAMBER SPECIFICATIONS

1. CHAMBERS SHALL BE STORMTECH SC-740.
2. CHAMBERS SHALL BE ARCH-SHAPED AND SHALL BE MANUFACTURED FROM VIRGIN, IMPACT-MODIFIED POLYPROPYLENE COPOLYMERS.
3. CHAMBERS SHALL BE CERTIFIED TO CSA B184, "POLYMERIC SUB-SURFACE STORMWATER MANAGEMENT STRUCTURES", AND MEET THE REQUIREMENTS OF ASTM F2418-16a, "STANDARD SPECIFICATION FOR POLYPROPYLENE (PP) CORRUGATED WALL STORMWATER COLLECTION CHAMBERS".
4. CHAMBER ROWS SHALL PROVIDE CONTINUOUS, UNOBSTRUCTED INTERNAL SPACE WITH NO INTERNAL SUPPORTS THAT WOULD IMPEDE FLOW OR LIMIT ACCESS FOR INSPECTION.
5. THE STRUCTURAL DESIGN OF THE CHAMBERS, THE STRUCTURAL BACKFILL, AND THE INSTALLATION REQUIREMENTS SHALL ENSURE THAT THE LOAD FACTORS SPECIFIED IN THE AASHTO LRFD BRIDGE DESIGN SPECIFICATIONS, SECTION 12.12, ARE MET FOR: 1) LONG-DURATION DEAD LOADS AND 2) SHORT-DURATION LIVE LOADS, BASED ON THE CSA S6 CL-625 TRUCK AND THE AASHTO DESIGN TRUCK WITH CONSIDERATION FOR IMPACT AND MULTIPLE VEHICLE PRESENCES.
6. CHAMBERS SHALL BE DESIGNED, TESTED AND ALLOWABLE LOAD CONFIGURATIONS DETERMINED IN ACCORDANCE WITH ASTM F2787, "STANDARD PRACTICE FOR STRUCTURAL DESIGN OF THERMOPLASTIC CORRUGATED WALL STORMWATER COLLECTION CHAMBERS". LOAD CONFIGURATIONS SHALL INCLUDE: 1) INSTANTANEOUS (<1 MIN) AASHTO DESIGN TRUCK LIVE LOAD ON MINIMUM COVER 2) MAXIMUM PERMANENT (75-YR) COVER LOAD AND 3) ALLOWABLE COVER WITH PARKED (1-WEEK) AASHTO DESIGN TRUCK.
7. REQUIREMENTS FOR HANDLING AND INSTALLATION:
   - TO MAINTAIN THE WIDTH OF CHAMBERS DURING SHIPPING AND HANDLING, CHAMBERS SHALL HAVE INTEGRAL, INTERLOCKING STACKING LUGS.
   - TO ENSURE A SECURE JOINT DURING INSTALLATION AND BACKFILL, THE HEIGHT OF THE CHAMBER JOINT SHALL NOT BE LESS THAN 50 mm (2").
   - TO ENSURE THE INTEGRITY OF THE ARCH SHAPE DURING INSTALLATION, a) THE ARCH STIFFNESS CONSTANT AS DEFINED IN SECTION 6.2.8 OF ASTM F2418 SHALL BE GREATER THAN OR EQUAL TO 550 LBS/IN/IN. AND b) TO RESIST CHAMBER DEFORMATION DURING INSTALLATION AT ELEVATED TEMPERATURES (ABOVE 23° C / 73° F), CHAMBERS SHALL BE PRODUCED FROM REFLECTIVE GOLD OR YELLOW COLORS.
8. ONLY CHAMBERS THAT ARE APPROVED BY THE SITE DESIGN ENGINEER WILL BE ALLOWED. UPON REQUEST BY THE SITE DESIGN ENGINEER OR OWNER, THE CHAMBER MANUFACTURER SHALL SUBMIT A STRUCTURAL EVALUATION FOR APPROVAL BEFORE DELIVERING CHAMBERS TO THE PROJECT SITE AS FOLLOWS:
   - THE STRUCTURAL EVALUATION SHALL BE SEALED BY A REGISTERED PROFESSIONAL ENGINEER.
   - THE STRUCTURAL EVALUATION SHALL DEMONSTRATE THAT THE SAFETY FACTORS ARE GREATER THAN OR EQUAL TO 1.95 FOR DEAD LOAD AND 1.75 FOR LIVE LOAD, THE MINIMUM REQUIRED BY ASTM F2787 AND BY SECTIONS 3 AND 12.12 OF THE AASHTO LRFD BRIDGE DESIGN SPECIFICATIONS FOR THERMOPLASTIC PIPE.
   - THE TEST DERIVED CREEP MODULUS AS SPECIFIED IN ASTM F2418 SHALL BE USED FOR PERMANENT DEAD LOAD DESIGN EXCEPT THAT IT SHALL BE THE 75-YEAR MODULUS USED FOR DESIGN.
9. CHAMBERS AND END CAPS SHALL BE PRODUCED AT AN ISO 9001 CERTIFIED MANUFACTURING FACILITY.

IMPORTANT - NOTES FOR THE BIDDING AND INSTALLATION OF THE SC-740 SYSTEM

1. STORMTECH SC-740 CHAMBERS SHALL NOT BE INSTALLED UNTIL THE MANUFACTURER'S REPRESENTATIVE HAS COMPLETED A PRE-CONSTRUCTION MEETING WITH THE INSTALLERS.
2. STORMTECH SC-740 CHAMBERS SHALL BE INSTALLED IN ACCORDANCE WITH THE "STORMTECH SC-310/SC-740/DC-780 CONSTRUCTION GUIDE".
3. CHAMBERS ARE NOT TO BE BACKFILLED WITH A DOZER OR AN EXCAVATOR SITUATED OVER THE CHAMBERS. STORMTECH RECOMMENDS 3 BACKFILL METHODS:
   - STONESHOOTER LOCATED OFF THE CHAMBER BED.
   - BACKFILL AS ROWS ARE BUILT USING AN EXCAVATOR ON THE FOUNDATION STONE OR SUBGRADE.
   - BACKFILL FROM OUTSIDE THE EXCAVATION USING A LONG BOOM HOE OR EXCAVATOR.
4. THE FOUNDATION STONE SHALL BE LEVELED AND COMPACTED PRIOR TO PLACING CHAMBERS.
5. JOINTS BETWEEN CHAMBERS SHALL BE PROPERLY SEATED PRIOR TO PLACING STONE.
6. MAINTAIN MINIMUM - 150 mm (6") SPACING BETWEEN THE CHAMBER ROWS.
7. EMBEDMENT STONE SURROUNDING CHAMBERS MUST BE A CLEAN, CRUSHED, ANGULAR STONE 20-50 mm (3/4-2").
8. THE CONTRACTOR MUST REPORT ANY DISCREPANCIES WITH CHAMBER FOUNDATION MATERIALS BEARING CAPACITIES TO THE SITE DESIGN ENGINEER.
9. ADS RECOMMENDS THE USE OF "FLEXSTORM CATCH IT" INSERTS DURING CONSTRUCTION FOR ALL INLETS TO PROTECT THE SUBSURFACE STORMWATER MANAGEMENT SYSTEM FROM CONSTRUCTION SITE RUNOFF.

NOTES FOR CONSTRUCTION EQUIPMENT

1. STORMTECH SC-740 CHAMBERS SHALL BE INSTALLED IN ACCORDANCE WITH THE "STORMTECH SC-310/SC-740/DC-780 CONSTRUCTION GUIDE".
2. THE USE OF CONSTRUCTION EQUIPMENT OVER SC-740 CHAMBERS IS LIMITED:
   - NO EQUIPMENT IS ALLOWED ON BARE CHAMBERS.
   - NO RUBBER TIRED LOADERS, DUMP TRUCKS, OR EXCAVATORS ARE ALLOWED UNTIL PROPER FILL DEPTHS ARE REACHED IN ACCORDANCE WITH THE "STORMTECH SC-310/SC-740/DC-780 CONSTRUCTION GUIDE".
   - WEIGHT LIMITS FOR CONSTRUCTION EQUIPMENT CAN BE FOUND IN THE "STORMTECH SC-310/SC-740/DC-780 CONSTRUCTION GUIDE".
3. FULL 900 mm (36") OF STABILIZED COVER MATERIALS OVER THE CHAMBERS IS REQUIRED FOR DUMP TRUCK TRAVEL OR DUMPING.

USE OF A DOZER TO PUSH EMBEDMENT STONE BETWEEN THE ROWS OF CHAMBERS MAY CAUSE DAMAGE TO THE CHAMBERS AND IS NOT AN ACCEPTABLE BACKFILL METHOD. ANY CHAMBERS DAMAGED BY THE "DUMP AND PUSH" METHOD ARE NOT COVERED UNDER THE STORMTECH STANDARD WARRANTY.

CONTACT STORMTECH AT 1-888-892-2694 WITH ANY QUESTIONS ON INSTALLATION REQUIREMENTS OR WEIGHT LIMITS FOR CONSTRUCTION EQUIPMENT.

©2013 ADS, INC.

PROPOSED LAYOUT		CONCEPTUAL ELEVATIONS	
12	STORMTECH SC-740 CHAMBERS	MAXIMUM ALLOWABLE GRADE (TOP OF PAVEMENT/UNPAVED):	3.353
6	STORMTECH SC-740 END CAPS	MINIMUM ALLOWABLE GRADE (UNPAVED WITH TRAFFIC):	1.524
152	STONE ABOVE (mm)	MINIMUM ALLOWABLE GRADE (UNPAVED NO TRAFFIC):	1.372
152	STONE BELOW (mm)	MINIMUM ALLOWABLE GRADE (TOP OF RIGID CONCRETE PAVEMENT):	1.372
40	STONE VOID	MINIMUM ALLOWABLE GRADE (BASE OF FLEXIBLE PAVEMENT):	1.372
30.8	INSTALLED SYSTEM VOLUME (m^3) (PERIMETER STONE INCLUDED) (COVER STONE INCLUDED) (BASE STONE INCLUDED)	TOP OF STONE:	1.067
		TOP OF SC-740 CHAMBER:	0.914
		300 mm x 300 mm TOP MANIFOLD INVERT:	0.470
		300 mm BOTTOM CONNECTION INVERT:	0.183
50.3	SYSTEM AREA (m^2)	600 mm ISOLATOR ROW PLUS INVERT:	0.155
29.7	SYSTEM PERIMETER (m)	BOTTOM OF SC-740 CHAMBER:	0.152
		UNDERDRAIN INVERT:	0.000
		BOTTOM OF STONE:	0.000

*INVERT ABOVE BASE OF CHAMBER

PART TYPE	ITEM ON LAYOUT	DESCRIPTION	INVERT*	MAX FLOW
PREFABRICATED END CAP	A	600 mm BOTTOM PREFABRICATED END CAP, PART#: SC740EPE24BR / TYP OF ALL 600 mm ISOLATOR ROW PLUS CONNECTIONS	3 mm	
MANIFOLD	B	300 mm x 300 mm TOP MANIFOLD, ADS N-12	318 mm	
NYLOPLAST (INLET W/ ISO PLUS ROW)	C	750 mm DIAMETER (610 mm SUMP MIN)		130 L/s IN
NYLOPLAST (OUTLET)	D	750 mm DIAMETER (DESIGN BY ENGINEER)		57 L/s OUT
UNDERDRAIN	E	150 mm ADS N-12 DUAL WALL PERFORATED HDPE UNDERDRAIN		

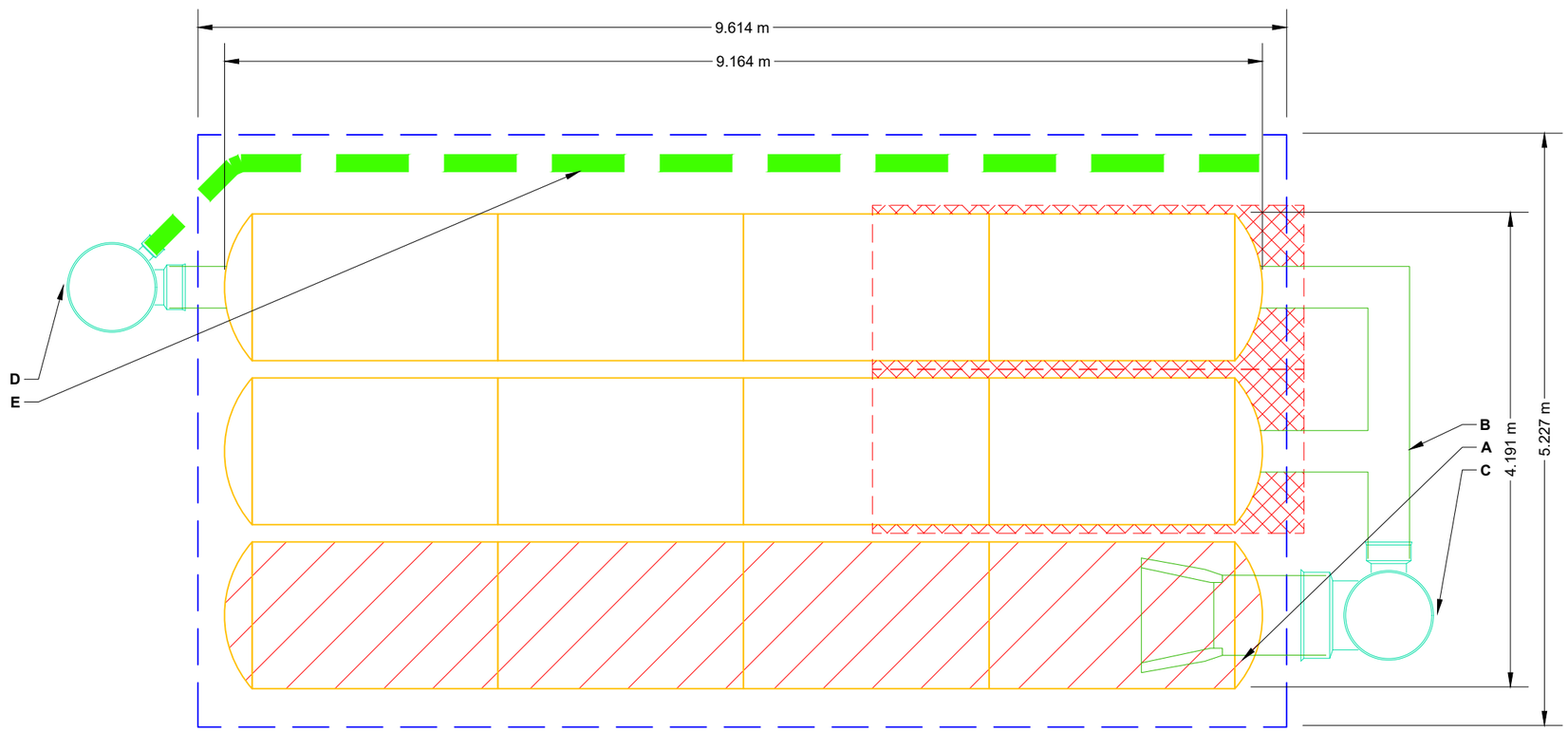

ISOLATOR ROW PLUS (SEE DETAIL)

PLACE MINIMUM 3.810 m OF ADSPLUS125 WOVEN GEOTEXTILE OVER BEDDING STONE AND UNDERNEATH CHAMBER FEET FOR SCOUR PROTECTION AT ALL CHAMBER INLET ROWS

BED LIMITS

NOTES

- MANIFOLD SIZE TO BE DETERMINED BY SITE DESIGN ENGINEER. SEE TECH NOTE #6.32 FOR MANIFOLD SIZING GUIDANCE.
- DUE TO THE ADAPTATION OF THIS CHAMBER SYSTEM TO SPECIFIC SITE AND DESIGN CONSTRAINTS, IT MAY BE NECESSARY TO CUT AND COUPLE ADDITIONAL PIPE TO STANDARD MANIFOLD COMPONENTS IN THE FIELD.
- THE SITE DESIGN ENGINEER MUST REVIEW ELEVATIONS AND IF NECESSARY ADJUST GRADING TO ENSURE THE CHAMBER COVER REQUIREMENTS ARE MET.
- THIS CHAMBER SYSTEM WAS DESIGNED WITHOUT SITE-SPECIFIC INFORMATION ON SOIL CONDITIONS OR BEARING CAPACITY. THE SITE DESIGN ENGINEER IS RESPONSIBLE FOR DETERMINING THE SUITABILITY OF THE SOIL AND PROVIDING THE BEARING CAPACITY OF THE INSITU SOILS. THE BASE STONE DEPTH MAY BE INCREASED OR DECREASED ONCE THIS INFORMATION IS PROVIDED.
- **NOT FOR CONSTRUCTION:** THIS LAYOUT IS FOR DIMENSIONAL PURPOSES ONLY TO PROVE CONCEPT & THE REQUIRED STORAGE VOLUME CAN BE ACHIEVED ON SITE.

817 ROSEVIEW
NEPEAN, CANADA

DATE:
DRAWN: ZM
PROJECT #:
CHECKED: N/A

REV	DRW	CHK	DESCRIPTION

StormTech®
Chamber System
888-892-2694 | WWW.STORMTECH.COM

ADS
4640 TRUEMAN BLVD
HILLIARD, OH 43026
1-800-733-7473

SCALE = 1 : 50

SHEET
2 OF 6

THIS DRAWING HAS BEEN PREPARED BASED ON INFORMATION PROVIDED TO ADS UNDER THE DIRECTION OF THE SITE DESIGN ENGINEER OR OTHER PROJECT REPRESENTATIVE. THE SITE DESIGN ENGINEER SHALL REVIEW THIS DRAWING PRIOR TO CONSTRUCTION. IT IS THE ULTIMATE RESPONSIBILITY OF THE SITE DESIGN ENGINEER TO ENSURE THAT THE PRODUCT(S) DEPICTED AND ALL ASSOCIATED DETAILS MEET ALL APPLICABLE LAWS, REGULATIONS, AND PROJECT REQUIREMENTS.

ACCEPTABLE FILL MATERIALS: STORMTECH SC-740 CHAMBER SYSTEMS

MATERIAL LOCATION		DESCRIPTION	AASHTO MATERIAL CLASSIFICATIONS	COMPACTION / DENSITY REQUIREMENT
D	**FINAL FILL:** FILL MATERIAL FOR LAYER 'D' STARTS FROM THE TOP OF THE 'C' LAYER TO THE BOTTOM OF FLEXIBLE PAVEMENT OR UNPAVED FINISHED GRADE ABOVE. NOTE THAT PAVEMENT SUBBASE MAY BE PART OF THE 'D' LAYER.	ANY SOIL/ROCK MATERIALS, NATIVE SOILS, OR PER ENGINEER'S PLANS. CHECK PLANS FOR PAVEMENT SUBGRADE REQUIREMENTS.	N/A	PREPARE PER SITE DESIGN ENGINEER'S PLANS. PAVED INSTALLATIONS MAY HAVE STRINGENT MATERIAL AND PREPARATION REQUIREMENTS.
C	**INITIAL FILL:** FILL MATERIAL FOR LAYER 'C' STARTS FROM THE TOP OF THE EMBEDMENT STONE ('B' LAYER) TO 18" (450 mm) ABOVE THE TOP OF THE CHAMBER. NOTE THAT PAVEMENT SUBBASE MAY BE A PART OF THE 'C' LAYER.	GRANULAR WELL-GRADED SOIL/AGGREGATE MIXTURES, <35% FINES OR PROCESSED AGGREGATE. MOST PAVEMENT SUBBASE MATERIALS CAN BE USED IN LIEU OF THIS LAYER.	AASHTO M145[1] A-1, A-2-4, A-3 OR AASHTO M43[1] 3, 357, 4, 467, 5, 56, 57, 6, 67, 68, 7, 78, 8, 89, 9, 10	BEGIN COMPACTIONS AFTER 12" (300 mm) OF MATERIAL OVER THE CHAMBERS IS REACHED. COMPACT ADDITIONAL LAYERS IN 6" (150 mm) MAX LIFTS TO A MIN. 95% PROCTOR DENSITY FOR WELL GRADED MATERIAL AND 95% RELATIVE DENSITY FOR PROCESSED AGGREGATE MATERIALS. ROLLER GROSS VEHICLE WEIGHT NOT TO EXCEED 12,000 lbs (53 kN). DYNAMIC FORCE NOT TO EXCEED 20,000 lbs (89 kN).
B	**EMBEDMENT STONE:** FILL SURROUNDING THE CHAMBERS FROM THE FOUNDATION STONE ('A' LAYER) TO THE 'C' LAYER ABOVE.	CLEAN, CRUSHED, ANGULAR STONE	AASHTO M43[1] 3, 357, 4, 467, 5, 56, 57	NO COMPACTION REQUIRED.
A	**FOUNDATION STONE:** FILL BELOW CHAMBERS FROM THE SUBGRADE UP TO THE FOOT (BOTTOM) OF THE CHAMBER.	CLEAN, CRUSHED, ANGULAR STONE	AASHTO M43[1] 3, 357, 4, 467, 5, 56, 57	PLATE COMPACT OR ROLL TO ACHIEVE A FLAT SURFACE.[2,3]

PLEASE NOTE:
1. THE LISTED AASHTO DESIGNATIONS ARE FOR GRADATIONS ONLY. THE STONE MUST ALSO BE CLEAN, CRUSHED, ANGULAR. FOR EXAMPLE, A SPECIFICATION FOR #4 STONE WOULD STATE: "CLEAN, CRUSHED, ANGULAR NO. 4 (AASHTO M43) STONE".
2. STORMTECH COMPACTION REQUIREMENTS ARE MET FOR 'A' LOCATION MATERIALS WHEN PLACED AND COMPACTED IN 6" (150 mm) (MAX) LIFTS USING TWO FULL COVERAGES WITH A VIBRATORY COMPACTOR.
3. WHERE INFILTRATION SURFACES MAY BE COMPROMISED BY COMPACTION, FOR STANDARD DESIGN LOAD CONDITIONS, A FLAT SURFACE MAY BE ACHIEVED BY RAKING OR DRAGGING WITHOUT COMPACTION EQUIPMENT. FOR SPECIAL LOAD DESIGNS, CONTACT STORMTECH FOR COMPACTION REQUIREMENTS.
4. ONCE LAYER 'C' IS PLACED, ANY SOIL/MATERIAL CAN BE PLACED IN LAYER 'D' UP TO THE FINISHED GRADE. MOST PAVEMENT SUBBASE SOILS CAN BE USED TO REPLACE THE MATERIAL REQUIREMENTS OF LAYER 'C' OR 'D' AT THE SITE DESIGN ENGINEER'S DISCRETION.

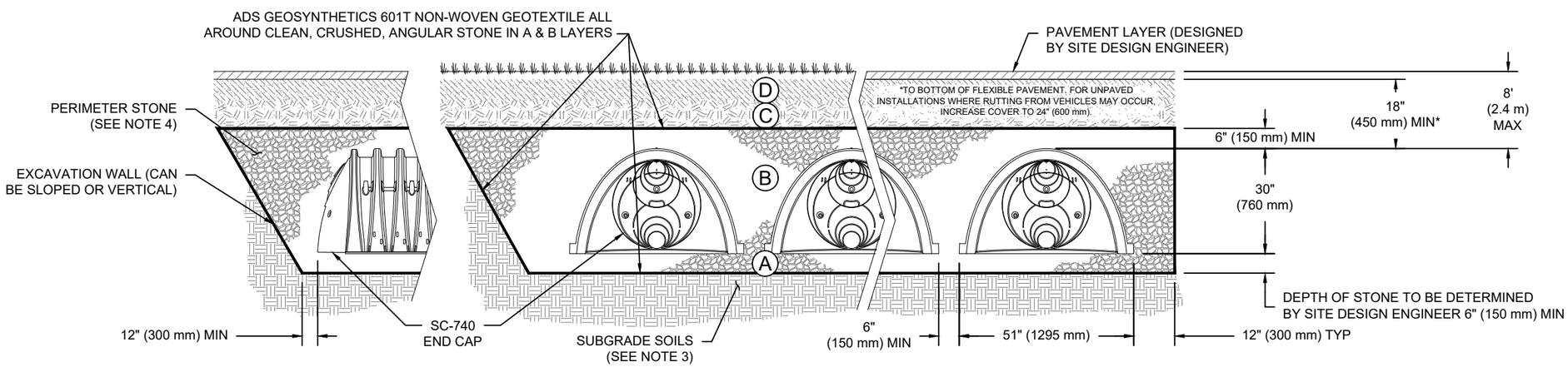

NOTES:

1. CHAMBERS SHALL MEET THE REQUIREMENTS OF ASTM F2418-16a, "STANDARD SPECIFICATION FOR POLYPROPYLENE (PP) CORRUGATED WALL STORMWATER COLLECTION CHAMBERS".
2. SC-740 CHAMBERS SHALL BE DESIGNED IN ACCORDANCE WITH ASTM F2787 "STANDARD PRACTICE FOR STRUCTURAL DESIGN OF THERMOPLASTIC CORRUGATED WALL STORMWATER COLLECTION CHAMBERS".
3. THE SITE DESIGN ENGINEER IS RESPONSIBLE FOR ASSESSING THE BEARING RESISTANCE (ALLOWABLE BEARING CAPACITY) OF THE SUBGRADE SOILS AND THE DEPTH OF FOUNDATION STONE WITH CONSIDERATION FOR THE RANGE OF EXPECTED SOIL MOISTURE CONDITIONS.
4. PERIMETER STONE MUST BE EXTENDED HORIZONTALLY TO THE EXCAVATION WALL FOR BOTH VERTICAL AND SLOPED EXCAVATION WALLS.
5. REQUIREMENTS FOR HANDLING AND INSTALLATION:
   - TO MAINTAIN THE WIDTH OF CHAMBERS DURING SHIPPING AND HANDLING, CHAMBERS SHALL HAVE INTEGRAL, INTERLOCKING STACKING LUGS.
   - TO ENSURE A SECURE JOINT DURING INSTALLATION AND BACKFILL, THE HEIGHT OF THE CHAMBER JOINT SHALL NOT BE LESS THAN 2".
   - TO ENSURE THE INTEGRITY OF THE ARCH SHAPE DURING INSTALLATION, a) THE ARCH STIFFNESS CONSTANT AS DEFINED IN SECTION 6.2.8 OF ASTM F2418 SHALL BE GREATER THAN OR EQUAL TO 550 LBS/IN/IN. AND b) TO RESIST CHAMBER DEFORMATION DURING INSTALLATION AT ELEVATED TEMPERATURES (ABOVE 73° F / 23° C), CHAMBERS SHALL BE PRODUCED FROM REFLECTIVE GOLD OR YELLOW COLORS.

817 ROSEVIEW
NEPEAN, CANADA

DRAWN: ZM
CHECKED: N/A
DATE:
PROJECT #:

REV	DRW	CHK	DESCRIPTION

ADS
4640 TRUEMAN BLVD
HILLIARD, OH 43026
1-800-733-7473

StormTech®
Chamber System
888-892-2694 | WWW.STORMTECH.COM

THIS DRAWING HAS BEEN PREPARED BASED ON INFORMATION PROVIDED TO ADS UNDER THE DIRECTION OF THE SITE DESIGN ENGINEER OR OTHER PROJECT REPRESENTATIVE. THE SITE DESIGN ENGINEER SHALL REVIEW THIS DRAWING PRIOR TO CONSTRUCTION. IT IS THE ULTIMATE RESPONSIBILITY OF THE SITE DESIGN ENGINEER TO ENSURE THAT THE PRODUCT(S) DEPICTED AND ALL ASSOCIATED DETAILS MEET ALL APPLICABLE LAWS, REGULATIONS, AND PROJECT REQUIREMENTS.

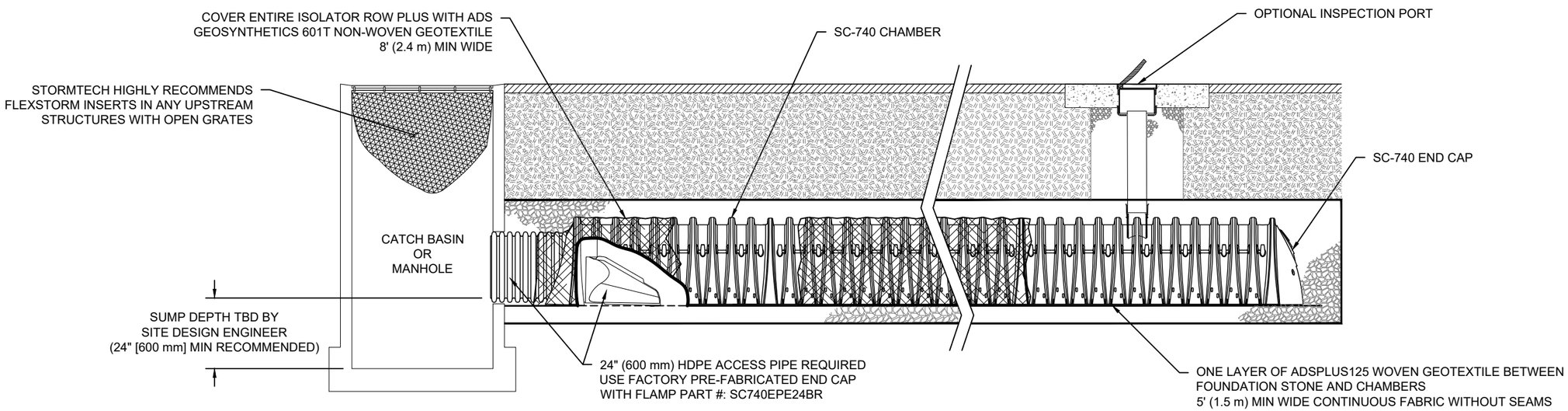

SC-740 ISOLATOR ROW PLUS DETAIL

NTS

INSPECTION & MAINTENANCE

STEP 1) INSPECT ISOLATOR ROW PLUS FOR SEDIMENT
- A. INSPECTION PORTS (IF PRESENT)
  - A.1. REMOVE/OPEN LID ON NYLOPLAST INLINE DRAIN
  - A.2. REMOVE AND CLEAN FLEXSTORM FILTER IF INSTALLED
  - A.3. USING A FLASHLIGHT AND STADIA ROD, MEASURE DEPTH OF SEDIMENT AND RECORD ON MAINTENANCE LOG
  - A.4. LOWER A CAMERA INTO ISOLATOR ROW PLUS FOR VISUAL INSPECTION OF SEDIMENT LEVELS (OPTIONAL)
  - A.5. IF SEDIMENT IS AT, OR ABOVE, 3" (80 mm) PROCEED TO STEP 2. IF NOT, PROCEED TO STEP 3.
- B. ALL ISOLATOR PLUS ROWS
  - B.1. REMOVE COVER FROM STRUCTURE AT UPSTREAM END OF ISOLATOR ROW PLUS
  - B.2. USING A FLASHLIGHT, INSPECT DOWN THE ISOLATOR ROW PLUS THROUGH OUTLET PIPE
    - i) MIRRORS ON POLES OR CAMERAS MAY BE USED TO AVOID A CONFINED SPACE ENTRY
    - ii) FOLLOW OSHA REGULATIONS FOR CONFINED SPACE ENTRY IF ENTERING MANHOLE
  - B.3. IF SEDIMENT IS AT, OR ABOVE, 3" (80 mm) PROCEED TO STEP 2. IF NOT, PROCEED TO STEP 3.

STEP 2) CLEAN OUT ISOLATOR ROW PLUS USING THE JETVAC PROCESS
- A. A FIXED CULVERT CLEANING NOZZLE WITH REAR FACING SPREAD OF 45" (1.1 m) OR MORE IS PREFERRED
- B. APPLY MULTIPLE PASSES OF JETVAC UNTIL BACKFLUSH WATER IS CLEAN
- C. VACUUM STRUCTURE SUMP AS REQUIRED

STEP 3) REPLACE ALL COVERS, GRATES, FILTERS, AND LIDS; RECORD OBSERVATIONS AND ACTIONS.

STEP 4) INSPECT AND CLEAN BASINS AND MANHOLES UPSTREAM OF THE STORMTECH SYSTEM.

NOTES

1. INSPECT EVERY 6 MONTHS DURING THE FIRST YEAR OF OPERATION. ADJUST THE INSPECTION INTERVAL BASED ON PREVIOUS OBSERVATIONS OF SEDIMENT ACCUMULATION AND HIGH WATER ELEVATIONS.
2. CONDUCT JETTING AND VACTORING ANNUALLY OR WHEN INSPECTION SHOWS THAT MAINTENANCE IS NECESSARY.

817 ROSEVIEW
NEPEAN, CANADA

DATE:
DRAWN: ZM
PROJECT #:
CHECKED: N/A

REV	DRW	CHK	DESCRIPTION

ADS
4640 TRUEMAN BLVD
HILLIARD, OH 43026
1-800-733-7473

StormTech®
Chamber System
888-892-2694 | WWW.STORMTECH.COM

THIS DRAWING HAS BEEN PREPARED BASED ON INFORMATION PROVIDED TO ADS UNDER THE DIRECTION OF THE SITE DESIGN ENGINEER OR OTHER PROJECT REPRESENTATIVE. THE SITE DESIGN ENGINEER SHALL REVIEW THIS DRAWING PRIOR TO CONSTRUCTION. IT IS THE ULTIMATE RESPONSIBILITY OF THE SITE DESIGN ENGINEER TO ENSURE THAT THE PRODUCT(S) DEPICTED AND ALL ASSOCIATED DETAILS MEET ALL APPLICABLE LAWS, REGULATIONS, AND PROJECT REQUIREMENTS.

UNDERDRAIN DETAIL

NTS

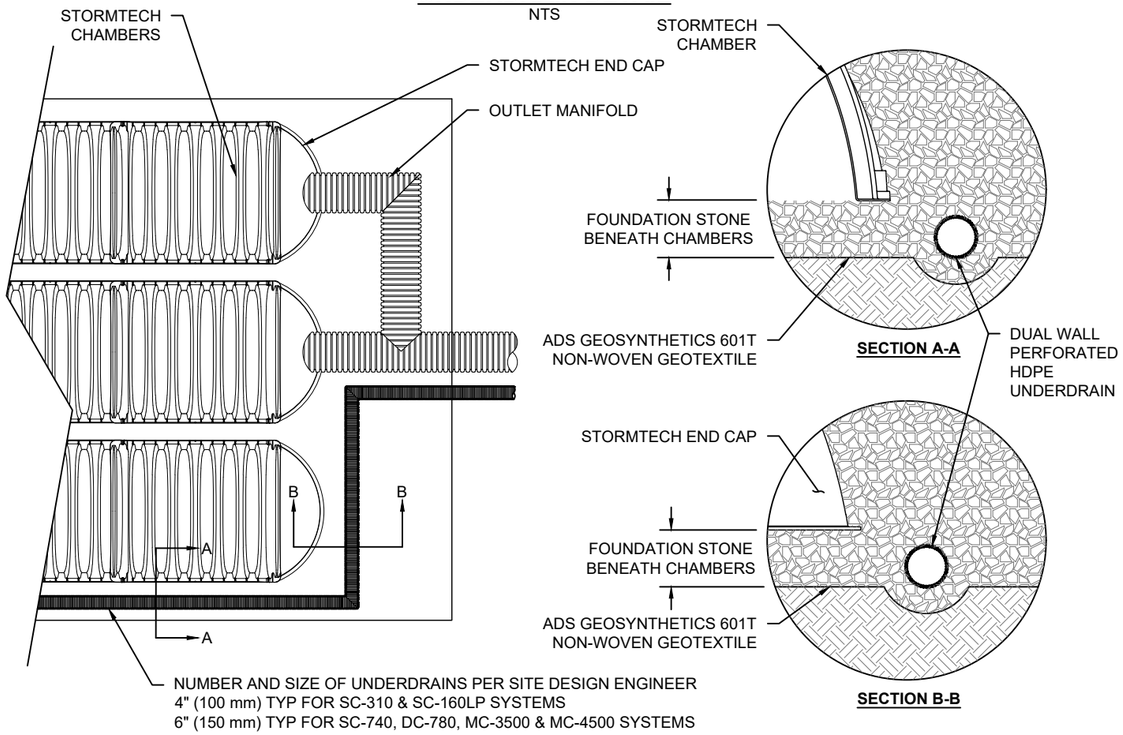

SC-740 TECHNICAL SPECIFICATION

NTS

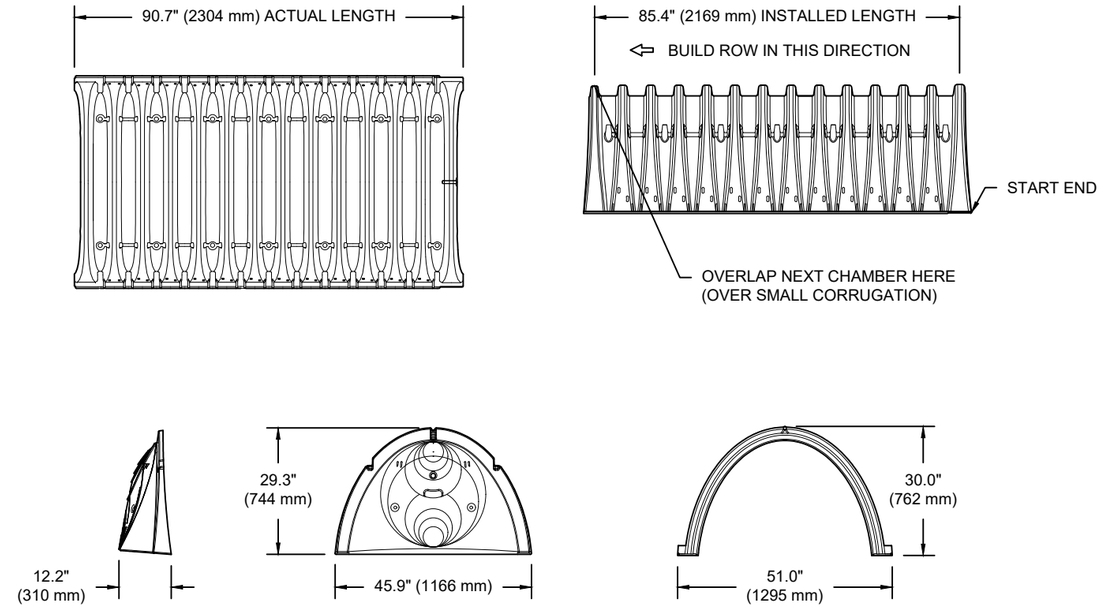

NOMINAL CHAMBER SPECIFICATIONS

SIZE (W X H X INSTALLED LENGTH)	51.0" X 30.0" X 85.4"	(1295 mm X 762 mm X 2169 mm)
CHAMBER STORAGE	45.9 CUBIC FEET	(1.30 m³)
MINIMUM INSTALLED STORAGE*	74.9 CUBIC FEET	(2.12 m³)
WEIGHT	75.0 lbs.	(33.6 kg)

*ASSUMES 6" (152 mm) STONE ABOVE, BELOW, AND BETWEEN CHAMBERS

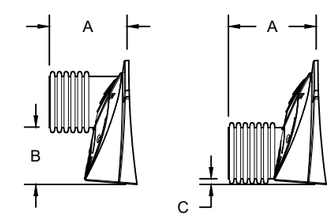

PRE-FAB STUB AT BOTTOM OF END CAP WITH FLAMP END WITH "BR"
PRE-FAB STUBS AT BOTTOM OF END CAP FOR PART NUMBERS ENDING WITH "B"
PRE-FAB STUBS AT TOP OF END CAP FOR PART NUMBERS ENDING WITH "T"
PRE-CORED END CAPS END WITH "PC"

PART #	STUB	A	B	C
SC740EPE06T / SC740EPE06TPC	6" (150 mm)	10.9" (277 mm)	18.5" (470 mm)	---
SC740EPE06B / SC740EPE06BPC			---	0.5" (13 mm)
SC740EPE08T /SC740EPE08TPC	8" (200 mm)	12.2" (310 mm)	16.5" (419 mm)	---
SC740EPE08B / SC740EPE08BPC			---	0.6" (15 mm)
SC740EPE10T / SC740EPE10TPC	10" (250 mm)	13.4" (340 mm)	14.5" (368 mm)	---
SC740EPE10B / SC740EPE10BPC			---	0.7" (18 mm)
SC740EPE12T / SC740EPE12TPC	12" (300 mm)	14.7" (373 mm)	12.5" (318 mm)	---
SC740EPE12B / SC740EPE12BPC			---	1.2" (30 mm)
SC740EPE15T / SC740EPE15TPC	15" (375 mm)	18.4" (467 mm)	9.0" (229 mm)	---
SC740EPE15B / SC740EPE15BPC			---	1.3" (33 mm)
SC740EPE18T / SC740EPE18TPC	18" (450 mm)	19.7" (500 mm)	5.0" (127 mm)	---
SC740EPE18B / SC740EPE18BPC			---	1.6" (41 mm)
SC740EPE24B*	24" (600 mm)	18.5" (470 mm)	---	0.1" (3 mm)
SC740EPE24BR*	24" (600 mm)	18.5" (470 mm)	---	0.1" (3 mm)

ALL STUBS, EXCEPT FOR THE SC740EPE24B/SC740EPE24BR ARE PLACED AT BOTTOM OF END CAP SUCH THAT THE OUTSIDE DIAMETER OF THE STUB IS FLUSH WITH THE BOTTOM OF THE END CAP. FOR ADDITIONAL INFORMATION CONTACT STORMTECH AT 1-888-892-2694.

* FOR THE SC740EPE24B/SC740EPE24BR THE 24" (600 mm) STUB LIES BELOW THE BOTTOM OF THE END CAP APPROXIMATELY 1.75" (44 mm). BACKFILL MATERIAL SHOULD BE REMOVED FROM BELOW THE N-12 STUB SO THAT THE FITTING SITS LEVEL.

NOTE: ALL DIMENSIONS ARE NOMINAL

817 ROSEVIEW
NEPEAN, CANADA

DATE:
DRAWN: ZM
PROJECT #:
CHECKED: N/A

REV	DRW	CHK	DESCRIPTION

ADS
4640 TRUEMAN BLVD
HILLIARD, OH 43026
1-800-733-7473

StormTech®
Chamber System
888-892-2694 | WWW.STORMTECH.COM

THIS DRAWING HAS BEEN PREPARED BASED ON INFORMATION PROVIDED TO ADS UNDER THE DIRECTION OF THE SITE DESIGN ENGINEER OR OTHER PROJECT REPRESENTATIVE. THE SITE DESIGN ENGINEER SHALL REVIEW THIS DRAWING PRIOR TO CONSTRUCTION. IT IS THE ULTIMATE RESPONSIBILITY OF THE SITE DESIGN ENGINEER TO ENSURE THAT THE PRODUCT(S) DEPICTED AND ALL ASSOCIATED DETAILS MEET ALL APPLICABLE LAWS, REGULATIONS, AND PROJECT REQUIREMENTS.

NYLOPLAST DRAIN BASIN

NTS

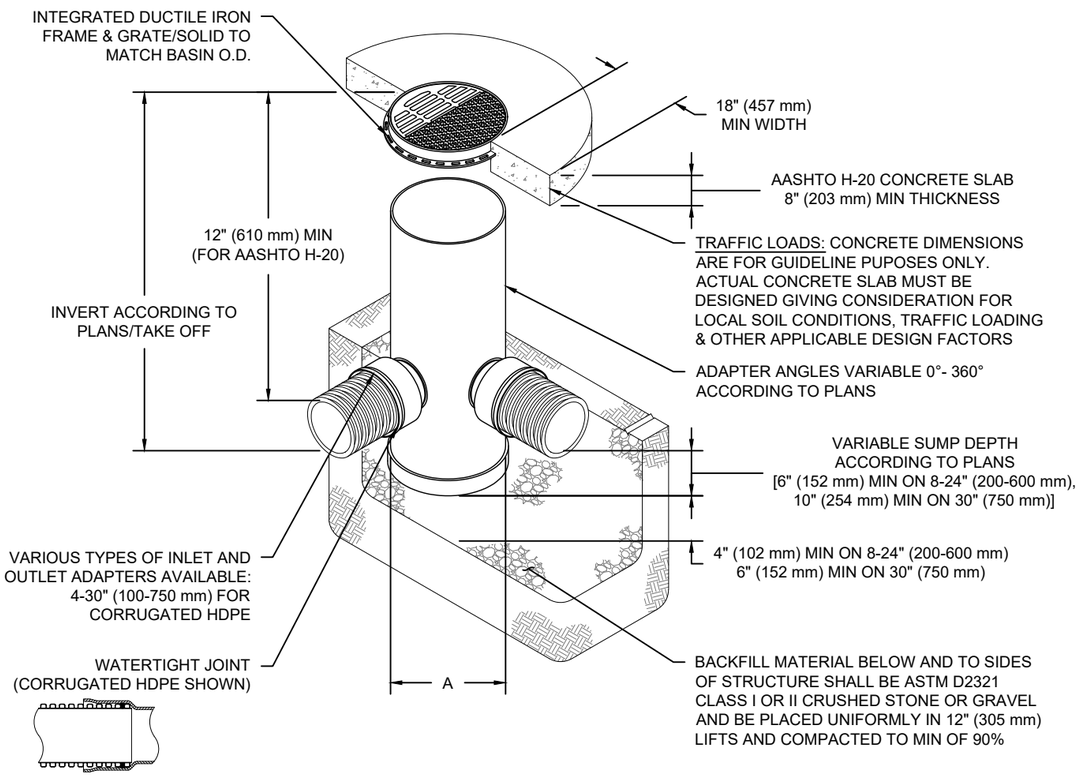

NOTES

1. 8-30" (200-750 mm) GRATES/SOLID COVERS SHALL BE DUCTILE IRON PER ASTM A536 GRADE 70-50-05
2. 12-30" (300-750 mm) FRAMES SHALL BE DUCTILE IRON PER ASTM A536 GRADE 70-50-05
3. DRAIN BASIN TO BE CUSTOM MANUFACTURED ACCORDING TO PLAN DETAILS
4. DRAINAGE CONNECTION STUB JOINT TIGHTNESS SHALL CONFORM TO ASTM D3212 FOR CORRUGATED HDPE (ADS & HANCOR DUAL WALL) & SDR 35 PVC
5. FOR COMPLETE DESIGN AND PRODUCT INFORMATION: **WWW.NYLOPLAST-US.COM**
6. TO ORDER CALL: **800-821-6710**

A	PART #	GRATE/SOLID COVER OPTIONS		
8" (200 mm)	2808AG	PEDESTRIAN LIGHT DUTY	STANDARD LIGHT DUTY	SOLID LIGHT DUTY
10" (250 mm)	2810AG	PEDESTRIAN LIGHT DUTY	STANDARD LIGHT DUTY	SOLID LIGHT DUTY
12" (300 mm)	2812AG	PEDESTRIAN AASHTO H-10	STANDARD AASHTO H-20	SOLID AASHTO H-20
15" (375 mm)	2815AG	PEDESTRIAN AASHTO H-10	STANDARD AASHTO H-20	SOLID AASHTO H-20
18" (450 mm)	2818AG	PEDESTRIAN AASHTO H-10	STANDARD AASHTO H-20	SOLID AASHTO H-20
24" (600 mm)	2824AG	PEDESTRIAN AASHTO H-10	STANDARD AASHTO H-20	SOLID AASHTO H-20
30" (750 mm)	2830AG	PEDESTRIAN AASHTO H-20	STANDARD AASHTO H-20	SOLID AASHTO H-20

817 ROSEVIEW
NEPEAN, CANADA

DATE:
DRAWN: ZM
PROJECT #:
CHECKED: N/A

REV	DRW	CHK	DESCRIPTION

Nyloplast®
770-932-2443 | WWW.NYLOPLAST-US.COM

ADS
4640 TRUEMAN BLVD
HILLIARD, OH 43026
1-800-733-7473

THIS DRAWING HAS BEEN PREPARED BASED ON INFORMATION PROVIDED TO ADS UNDER THE DIRECTION OF THE SITE DESIGN ENGINEER OR OTHER PROJECT REPRESENTATIVE. THE SITE DESIGN ENGINEER SHALL REVIEW THIS DRAWING PRIOR TO CONSTRUCTION. IT IS THE ULTIMATE RESPONSIBILITY OF THE SITE DESIGN ENGINEER TO ENSURE THAT THE PRODUCT(S) DEPICTED AND ALL ASSOCIATED DETAILS MEET ALL APPLICABLE LAWS, REGULATIONS, AND PROJECT REQUIREMENTS.

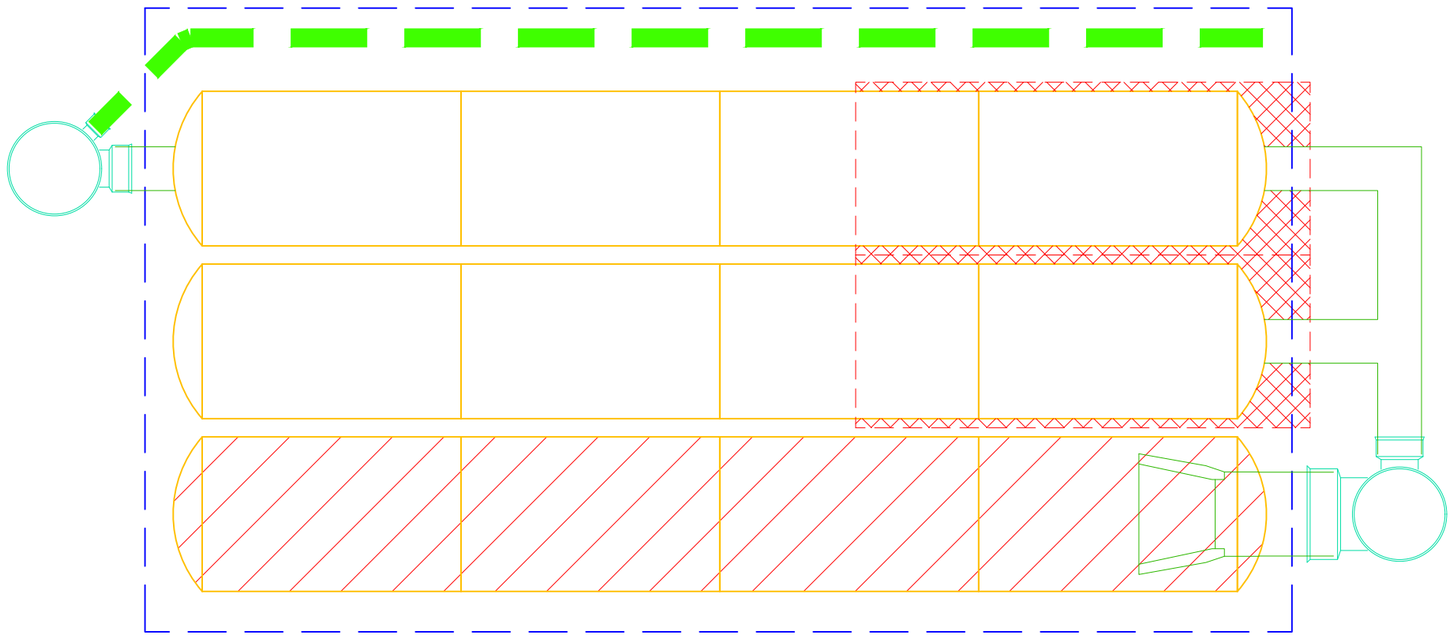

R O S E V I E W A V E.

ROSE VIEW

PENNY DRIVE

RICHMOND RD.

MICHELE DR

BOYCE AVE

CARLING AVE PLAN No G-32-4

PL No L-32

PROPOSED 8" SANITARY SEWER

EXISTING 8" WATER MAIN

EXISTING 42" STORM SEWER

EXISTING 10" SAN SEWER

TO BE ABANDONED

NOTES

PROFILE FOR LANE. SEE PLAN D-38-M

NOTES

RED O PLAN No 225

PITCH ALONG CARLING AVENUE TO BE LOWERED AND REMOVED FROM ROSEVIEW TO EXISTING CULVERT AT SURVEYS.

NOTE. ALL STORM SEWERS TO BE CONSTRUCTED WITH APPROVED RUBBER GASKETS

ST SEWER CONST 10' W/OF EXIST SAN SEWER

NOT TO SCALE

STANDARD CONCRETE CRADLE AS PER SPEC. 300-14

FINAL MEASURMENT			
ROSEVIEW AVE FROM CARLING AVE		FOR STORM SEWER TO PENNY DR	
WORK START	MAY, 1972	DESIGNER	K SPERO
WORK COMP	MAY, 1972	INSPECTOR	N. DUBROY
FINAL MEAS	MAY, 1972	CONTRACTOR	GRANT
FIELD BOOKS		INSTMAN	D MACNAB
DESIGN		APPROVED BY	D SMALL
CONSTR 3606		CONTRACT NO.	
FINAL MEAS 3606		FINAL MEAS. FOLDER 1194	
TO ORIGINAL K TO EG		OCT 16, 1974	

ROSEVIEW AVENUE
S/LIMIT LOT 1 TO CARLING AVE
STORM SEWER

DESIGNED BY P Chanchi
DRAWN BY K K S
CHECKED BY
F E AYERS P Eng.
DATE Sept 1/72

EXISTING 30" CL. III C-76 A S T M (REVISED TO DATE) CONCRETE PIPE STORM SEWER GR 1.3%

EXISTING 24" CL III C-76 A S T M (REVISED TO DATE) CONC PIPE STORM SEWER PROP GR 1.0%

EXISTING 30" CL III C-76 A S T M (REVISED TO DATE) CONC PIPE STORM SEWER GR 0.78%

EXISTING 42" CL III C-76 A S T M (REVISED TO DATE) CONCRETE PIPE STORM SEWER GR 0.20%

EXIST 50"X31" STORM SEWER

30" REINF CONC A.S.T.M. C76-61 CL II STORM SEWER GR = 1 in 250 or .4%

8" CLASS 2400 ASBESTOS CEMENT PIPE SANITARY SEWER (VITRIFIED PIPE CAN BE USED) GRADE 1 IN 85.25 OR 1.29%

8" CLASS 2400 ASBESTOS CEMENT PIPE SANITARY SEWER (VITRIFIED PIPE CAN BE USED) GRADE 1 IN 103.93 OR 0.97%

8" CLASS 2400 ASBESTOS CEMENT PIPE SANITARY SEWER (VITRIFIED PIPE CAN BE USED) GRADIENT = 0.4% OR 1 IN 250.

REVISIONS			
DATE	DESCRIPTION	DRN BY	CHKD BY

DESIGNED BY	DATE
ROAD GRADE L ST 1	NOV 10 1962
STORM SEWER	
SAN SEWER F Chanchi	APRIL 5, 1962

ROAD GRADE
SURFACE
INVERT
STATION
ELEVATIONS

CITY OF OTTAWA
PLANNING AND WORKS DEPARTMENT
SEWERAGE AND DRAINAGE BRANCH

ROSEVIEW AVE.
CARLING AVE TO PENNY DR

DRAWN BY J. Wilson
CHECKED BY
DATE SEPT 15 1972
SURVEY BOOK 3055

SCALES HOR 1"=40' VER 1"=5'

PLAN L-32

L32-1

REVISIONS / RÉVISIONS	DATE	BY
REDRAWN FROM VOIDED UTILITY PLAN G-C-15	AUG. 2007	OK
HYDRO,BELL,ENBRIDGE,ROGERS, CITY SEWER, WATER, TRAFFIC, SL COMPILED/DIGITIZED FROM UTILITY/CITY DATA	OCT 2013	ZB

LEGEND

- Water Valve, Valve Chamber, Fire Hydrant
- Sewer Manhole, Catch Basin Manhole
- Catch Basin / Drainage, Wing Wall, Head Wall
- Pole, Pole w/ light, Decorative, Lawn Light
- Power Supply, Panel, Pedestal, Transformer, Tower, Regulator (P/S, PNL, PED, GR)
- Amp, Hand Hole, Vault, Gas Valve
- OC Transpo: Bus Shelter-No Power, Energized, Isolated (BUS, BUS, BUS)
- Streetscape: Planter Box, Grate Square, Eng. Soil (TGS)
- Traffic Connect Box / Disconnect Box, SL Disconnect (TCB, TDB, SDB)
- Red Light Hand Hole, Red Light Camera (THH)
- Scada: Hand Hole, Monitoring Panel
- Reducer
- Pipe, Duct, Conduit, Lateral
- Culvert
- Abandoned
- Capped
- Buried Cable
- Property Line
- Install Year (2015)

TELECOM GLOSSARY

A	Allstream	P	Primus
AT	Atria	P2P	Canadian P2P Fibre
B	Bell	R	Rogers
BH	Birch Hill	S	Sprint
F	Fibre Noir	SL	Street Lighting
G	Globility	T	Traffic
GT	Group Telecom	TO	Telecom Ottawa
H	Hydro Ottawa	TU	Telus
H1	Hydro One	V	Videotron
L / L3	Level 3	Z	Zayo

GLOSSARY - OTHER

DD	Dept. of Defence	PED	Pedestal (owner unknown)
MH	Manhole (owner unknown)	PW	Public Works
O/OC	OCTranspo	UP	Utility Pole (owner unknown)
SCD	Scada		

CAUTION/ATTENTION

Although utility locations are established using the best available information, they cannot be guaranteed.
Property lines were compiled from plans and documents recorded in the Land Registry System and are for indexing purposes only.

Bien que l'emplacement des services publics soient établis en utilisant la meilleure information disponible, ils ne peuvent pas être garantis.
Des lignes de propriété ont été compilées en utilisant des plans et des documents enregistrés dans le système de cadastre et sont pour l'indexation seulement.

Ottawa

Right of Way, Heritage, and Urban Design Services /
Gestionnaire, Services des emprises, du patrimoine, et du design urbain
Planning, Infrastructure and Economic Development Department /
Direction generale de la planification, de l'infrastructure et du developpement economique
100 Constellation Cres., 6th Floor East / 6ème Étage Est, Ottawa, ON K2G 6J8

OTTAWA UTILITY COORDINATING COMMITTEE
CENTRAL REGISTRY
COMITÉ DE COORDINATION DES SERVICES PUBLICS D'OTTAWA
ENREGISTREMENT CENTRAL

UTILITY COORDINATING COMMITTEE — UCC — Ottawa — CCSP — COMITÉ DE COORDINATION DES SERVICES PUBLICS

PRODUCED BY: GIS & DATA MANAGEMENT BRANCH
INFORMATION CENTRE UNIT

SCALE: 1:250

SHEET NUMBER
G-C-15

R O S E V I E W A V E.

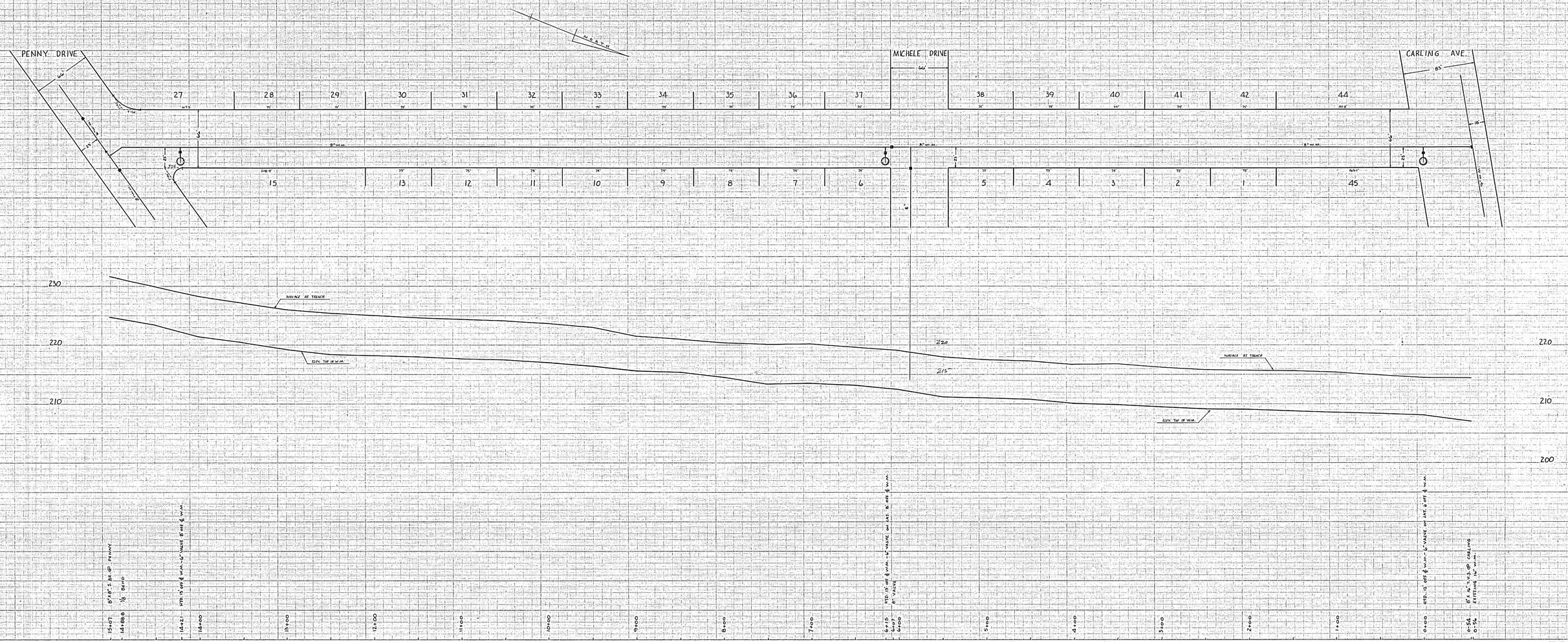

6178

Appendix B: Correspondence

File No.: PC2021-0100
Date: April 19, 2021

ADDRESS: 817 Roseview Avenue
Pre-Consultation Meeting Minutes
Meeting Date: April 1, 2021

Attendee	Role	Organization
Lisa Stern	Planner	City of Ottawa
Patrick McMahon	Transportation Project Manager	
Abi Dieme	Infrastructure Project Manager	
Randolph Wang	Urban Designer	
Mark Richardson	Planning Forester	
Fernando Matos	Applicant	
Fares Elsabbagh	Property Owner	Canadian General Contractors

Comments from the Applicant:

1. Propose to develop a 4 storey, 20 unit rental apartment buildings with 15 parking spaces and a 14m height.
2. Looking to partner with Ottawa Community Housing for the provision of affordable housing on the site.
3. A storm water easement runs along the southern side of the site. Would need permission from the easement holder (City) to permit driveway or plantings on the easement. Landscaping will be limited in this area.

Planning Comments:

1. The application form, timeline and fees can be found here.
2. The subject lands are designated Arterial Mainstreet in the City's Official Plan and are zoned AM[2181]H(11).
3. A complex site plan application and rezoning will be required to increase the height permission on the property beyond 11m and to facilitate the 37% reduction in parking.
4. A Planning Rationale should be provided which discusses the desirability of the proposed intensification and compatibility with the existing R1 zoned properties to the south.
5. A rationale for the proposed reduction in parking should be provided.
6. Please note that accessible parking spaces must be provided, please also review the minimum size requirements for each parking space.
7. The location of the proposed rooftop amenity should be examined to limit noise and overlook on the adjacent properties.
8. Please examine the opportunity for increased landscaping on the property. The easement which runs along the south side of the site may limit significant landscaping. Landscaping should be discussed in the Urban Design Brief and Planning Rationale.
9. Cash-in-lieu of parkland and associated appraisal fee will be required as a condition of approval as per the Parkland Dedication Bylaw. The rate for an apartment is the value of 10% of the land area of the site being developed. If they can demonstrate that CILP was previously paid, the amount of CILP to be paid will be adjusted.
10. Please consult with the Ward Councillor prior to submission.

Urban Design

1. A Design Brief is required as part of the submission package. The Terms of Reference of the Design Brief is attached for convenience.
    a. Please conduct a thorough streetscape character study of Roseview. The study should include qualitative and quantitative analysis of elements such as pattern of front yard setback, building elevations, pattern of fenestration, proportion of soft landscaping vs hard surfaces, and tree canopies, etc.
    b. Please show the proposed development in both existing and planned context. The planned context can be illustrated through the interpretation of the zoning envelope.
2. With respect to the design concept presented at the meeting:
    a. The proposed front yard appears to be too narrow. The front yard should be consistent with the rest of the street.
    b. It is important to maintain a continuous tree canopy. The proposed narrow front yard, combined with the window wells that are likely be to installed for the basement units, may limit the opportunity for landscape and tree planting.
    c. The proposed driveway shown on the circulated rendering appears to be very wide. However, this may simply be a rendering error.
    d. An additional 2m building step back could be an effective strategy to mitigate massing. However, given that buildings along Roseview are one to two storeys in height, it may be more appropriate to maintain a one and half storey volume (basement + ground floor) at the front and step all floors above back.
    e. The intent to decorate the building with cornice lines is appreciated. However, it appears that the two cornice lines shown are too heavy and unnecessarily exaggerate the effects of height. A subtle expression will be more conducive.
    f. A good study of the fenestration pattern along the Roseview will help with the design of a more compatible building.
    g. Please be mindful of the potential privacy concerns of the abutting property owners, particularly with respect to their enjoyment in the backyard. A careful view analysis of the rooftop amenity space can help identify potential issues and develop proper design strategies.
    h. Please explore opportunities for landscaping, particularly canopy trees, in the rear yard.
    i. The narrow interior side yard on the north side could potentially make the installation and maintenance of the basement light wells difficult.

<u>Transportation:</u>

1. No TIA is required.
2. Site triangles at the following locations on the final plan will be required:
    a. Local Road to Local Road: 3 metres x 3 metres
3. Ensure that corner clearance is met.
4. Noise Impact Studies required for the following:
    a. Road (within 100m of Carling Avenue)
    b. Stationary
5. On the site plan:
    a. Show all details of the roads including adjacent accesses abutting the site up to and including the opposite curb.
    b. Turning templates will be required for all accesses showing the largest vehicle to access the site; turning movements should also be provided to ensure that all vehicles can access the northernmost parking spaces without excessive maneuvers.

    c. Show all curb radii measurements; ensure that all curb radii are reduced as much as possible.
    d. Show lane/aisle widths.
6. As the site proposed is residential, AODA legislation applies for all areas accessible to the public (i.e. outdoor pathways, parking, etc.). Consider using the City's Accessibility Design Standards.
7. Given the lower parking provisions, parking spillover is likely in this context given that Carling Avenue is not a transit priority corridor in this area. To help justify this lower parking rate and auto driver mode share, consider:
    a. Reviewing the City's TDM Checklists and implementing at least all required strategies;
    b. Providing an introductory PRESTO passes per unit to encourage transit use; and
    c. Providing surface level bicycle parking for visitors, and at least one bicycle parking space per unit given that Carling Avenue is a spine route.

Engineering:
Please see attached memo.

Planning Forestry:
TCR requirements:

1. a Tree Conservation Report (TCR) must be supplied for review along with the suite of other plans/reports required by the City
    a. an approved TCR is a requirement of Site Plan approval.
2. As of January 1 2021, any removal of privately-owned trees 10cm or larger in diameter, or publicly (City) owned trees of any diameter requires a tree permit issued under the Tree Protection Bylaw (Bylaw 2020 – 340); the permit will be based on an approved TCR and made available at or near plan approval.
3. The Planning Forester from Planning and Growth Management as well as foresters from Forestry Services will review the submitted TCR
    a. If tree removal is required, both municipal and privately-owned trees will be addressed in a single permit issued through the Planning Forester
    b. Compensation may be required for city owned trees – if so, it will need to be paid prior to the release of the tree permit
4. the TCR must list all trees on site by species, diameter and health condition
5. please identify trees by ownership – private onsite, private on adjoining site, city owned, co-owned (trees on a property line)
6. the TCR must list all trees on adjacent sites if they have a critical root zone that extends onto the development site
7. If trees are to be removed, the TCR must clearly show where they are, and document the reason they cannot be retained
8. All retained trees must be shown and all retained trees within the area impacted by the development process must be protected as per City guidelines available at Tree Protection Specification or by searching Ottawa.ca
        a. the location of tree protection fencing must be shown on a plan
        b. show the critical root zone of the retained trees
        c. if excavation will occur within the critical root zone, please show the limits of excavation
9. the City encourages the retention of healthy trees; if possible, please seek opportunities for retention of trees that will contribute to the design/function of the site.

10. For more information on the process or help with tree retention options, contact Mark Richardson mark.richardson@ottawa.ca or on City of Ottawa

LP tree planting requirements:
For additional information on the following please contact tracy.smith@Ottawa.ca

Minimum Setbacks

- Maintain 1.5m from sidewalk or MUP/cycle track.
- Maintain 2.5m from curb
- Coniferous species require a minimum 4.5m setback from curb, sidewalk or MUP/cycle track/pathway.
- Maintain 7.5m between large growing trees, and 4m between small growing trees. Park or open space planting should consider 10m spacing.
- Adhere to Ottawa Hydro's planting guidelines (species and setbacks) when planting around overhead primary conductors.

Tree specifications

- Minimum stock size: 50mm tree caliper for deciduous, 200cm height for coniferous.
- Maximize the use of large deciduous species wherever possible to maximize future canopy coverage
- Tree planting on city property shall be in accordance with the City of Ottawa's Tree Planting Specification; and include watering and warranty as described in the specification (can be provided by Forestry Services).
- Plant native trees whenever possible
- No root barriers, dead-man anchor systems, or planters are permitted.
- No tree stakes unless necessary (and only 1 on the prevailing winds side of the tree)

Hard surface planting

- Curb style planter is highly recommended
- No grates are to be used and if guards are required, City of Ottawa standard (which can be provided) shall be used.
- Trees are to be planted at grade

Soil Volume

- Please ensure adequate soil volumes are met:

Tree Type/Size	Single Tree Soil Volume (m3)	Multiple Tree Soil Volume (m3/tree)
Ornamental	15	9
Columnar	15	9
Small	20	12
Medium	25	15
Large	30	18
Conifer	25	15

Please note that these soil volumes are not applicable in cases with Sensitive Marine Clay.

Sensitive Marine Clay

- Please follow the City's 2017 Tree Planting in Sensitive Marine Clay guidelines

Please refer to the links to "Guide to preparing studies and plans" and fees for general information. Additional information is available related to building permits, development charges, and the Accessibility Design Standards. Be aware that other fees and permits may be required, outside of the development review process. You may obtain background drawings by contacting informationcentre@ottawa.ca.

These pre-con comments are valid for one year. If you submit a development application(s) after this time, you may be required to meet for another pre-consultation meeting and/or the submission requirements may change. You are as well encouraged to contact us for a follow-up meeting if the plan/concept will be further refined.
Please contact me at Lisa.Stern@ottawa.ca or at 613-580-2424 extension 21108 if you have any questions.

Development Review – Pre-application consultation Checklist (Municipal Servicing)

Date: 2021-Apr-01

Site Location: 817 Roseview Avenue

Type of Development: ☒ **Residential** (☐ **townhomes,** ☐ **stacked,** ☐ **singles,** ☐ **apartments),**
☐ **Office Space,** ☐ **Commercial,** ☐ **Retail,** ☐ **Institutional,** ☐ **Industrial,**
Other: N/A

Owner/Agent: Fernando Matos
Assigned Planner: Lisa Stern
Attendees: Lisa Stern, Randolph Wang, Mark Richardson, Patrick Mahon, Fernando Matos, Fares Elsabbagh, Abibatou Dieme

---

Infrastructure Information – All existing and proposed utilities (municipal pipes) must be shown on the servicing plans

Water:
District Plan No. 1W
Verify with ROW Approvals Unit if frontage charges apply ($190.00 per metre) ☐ **Yes** ☒ **No**

Connection point: 203mm CI watermain on Roseview Avenue

Submission documents must address/discuss:

Boundary conditions (civil consultant must request boundary conditions from the City's assigned Project Manager, Development Review)
Water boundary condition requests must include the location of the service and the expected loads required by the proposed development. Please provide all the following information:
Location of service (show on a plan or map)
Type of development and the amount of fire flow required (as per FUS, 1999).
Average daily demand: ___ l/s.
Maximum daily demand: ___l/s.
Maximum hourly daily demand: ___ l/s.
Supporting Calculations of the required fire flow and all domestic demands listed above
Fire protection (Fire demand, Hydrant Locations)
a water meter sizing questionnaire [water card] will have to be completed prior to receiving a water permit (water card will be provided post approval)

Development Review – Pre-application consultation Checklist (Municipal Servicing)

Sanitary Sewers (size and location of connection): 200mm AC sanitary sewer on Roseview Avenue

Is a monitoring manhole required on private property? ☒ **Yes** ☐ **No**

Storm Sewers (size and location of connection)**:** 1050mm Concrete storm sewer on Roseview Ave
The 675mm concrete sewer is shallow which makes gravity connection would be challenging.

Storm Water Management:

a) Quality Control:
Rideau Valley Conservation Authority to establish if quality control is required for this project and provide criteria.

b) Quantity Control:

- Design storm for receiving sewer: 5-year design storm
- Runoff coefficient (C): C=0.5 or C=pre-development, whichever is less
- Time of concentration (Tc): To be calculated, min Tc=10mins
- Allowable flow rate: Control the 100-year event to the 5-year event

Are there any Capital Works Projects scheduled that will impact the application? ☐ **Yes** ☒ **No**
No moratoriums.

Additional Notes

- Extent of the storm sewer easement to be confirmed
- Easement to be shown on all plans being submitted. No works are permitted within an easement unless written authorization is provided by the easement holder. Permission from City of Ottawa Asset Management Branch to be coordinated with the project manager.

Development Review – Pre-application consultation Checklist (Municipal Servicing)

- Existing ditch to be maintained. Culvert to be installed underneath the entranceway

---

Refer to following list of required supporting plans and studies required for the infrastructure component of your submission

- Site Plan application
    1. Grade Control and Drainage Plan
    2. Site Servicing Plan
    3. Site Servicing Study
    4. Stormwater Management Report
    5. Erosion and Sediment Control Plan
    6. Geotechnical Study

For information on preparing required studies and plans refer to:
http://ottawa.ca/en/development-application-review-process-0/guide-preparing-studies-and-plans

zoran@archnova.ca

From: Dieme, Abi <Abibatou.Dieme@ottawa.ca>
Sent: July 22, 2021 2:17 PM
To: zoran@archnova.ca
Subject: RE: 817 Roseview Avenue: boundary conditions
Attachments: 817 Roseview Avenue July 2021.pdf

Good afternoon Zoran,

The following are boundary conditions, HGL, for hydraulic analysis at 817 Roseview Avenue (zone 1W) assumed to be connected to the 203 mm watermain on Roseview Avenue (see attached PDF for location).

Minimum HGL: 107.4 m

Maximum HGL: 115.6 m

Max Day + Fire Flow (150 L/s): 101.3 m

These are for current conditions and are based on computer model simulation.

Disclaimer: The boundary condition information is based on current operation of the city water distribution system. The computer model simulation is based on the best information available at the time. The operation of the water distribution system can change on a regular basis, resulting in a variation in boundary conditions. The physical properties of watermains deteriorate over time, as such must be assumed in the absence of actual field test data. The variation in physical watermain properties can therefore alter the results of the computer model simulation.

Regards,
Abi

From: zoran@archnova.ca <zoran@archnova.ca>
Sent: July 20, 2021 11:17 AM
To: Dieme, Abi <Abibatou.Dieme@ottawa.ca>
Subject: RE: 817 Roseview Avenue: boundary conditions

CAUTION: This email originated from an External Sender. Please do not click links or open attachments unless you recognize the source.

ATTENTION : Ce courriel provient d'un expéditeur externe. Ne cliquez sur aucun lien et n'ouvrez pas de pièce jointe, excepté si vous connaissez l'expéditeur.

Hello Abi,

The service connection can be wherever along the front of the property. It is sufficient and precise enough for the model.

Regards,

Zoran

From: Dieme, Abi <Abibatou.Dieme@ottawa.ca>
Sent: July 20, 2021 10:47 AM
To: zoran@archnova.ca
Subject: RE: 817 Roseview Avenue: boundary conditions

Hi Zoran,

We'd need a screenshot of the anticipated location of water service connection for this development for the boundary conditions. I am satisfied with the additional information provided in your previous email.

Regards,
Abi

From: zoran@archnova.ca <zoran@archnova.ca>
Sent: July 16, 2021 10:57 AM
To: Dieme, Abi <Abibatou.Dieme@ottawa.ca>
Subject: RE: 817 Roseview Avenue: boundary conditions

CAUTION: This email originated from an External Sender. Please do not click links or open attachments unless you recognize the source.

ATTENTION : Ce courriel provient d'un expéditeur externe. Ne cliquez sur aucun lien et n'ouvrez pas de pièce jointe, excepté si vous connaissez l'expéditeur.

Attached is the City services plan for 817 Roseview.

Regards,

Zoran Mrdja, P.Eng., FEC
Durk0Qryd Ghvljq Lqf1
613-818-3884

From: Dieme, Abi <Abibatou.Dieme@ottawa.ca>
Sent: July 15, 2021 12:06 PM
To: zoran@archnova.ca
Subject: RE: 817 Roseview Avenue: boundary conditions

Good afternoon,

I would need a GeoOttawa based image of the proposed water service connection at the watermain. According to the site plan submitted, the total ground floor area excluding basement area is greater than provided in the calculations which is affecting the final fire flow provided. Please revise the calculations.

Regards,
Abi

From: zoran@archnova.ca <zoran@archnova.ca>
Sent: July 07, 2021 11:11 AM
To: Dieme, Abi <Abibatou.Dieme@ottawa.ca>
Subject: 817 Roseview Avenue: boundary conditions

CAUTION: This email originated from an External Sender. Please do not click links or open attachments unless you recognize the source.

ATTENTION : Ce courriel provient d'un expéditeur externe. Ne cliquez sur aucun lien et n'ouvrez pas de pièce jointe, excepté si vous connaissez l'expéditeur.

Could you please provide the boundary conditions for the location of 135 Sweetland Avenue, Ottawa?
Following are the initial information:

1. Type of development: 4storey+basement, 20 units building.
2. Fire flow required: 150 l/sec (FUS); 72.26 (OBC); nearest hydrant distance 52.80 m
3. Average Daily Demand: 0.11 l/sec
4. Maximum Hourly Demand: 1.03 l/Sec
5. Maximum Daily Demand: 1.55 l/sec

Attached are calculation sheets, image of nearest hydrant distance (from Geoottawa) and the site plan of proposed development.
Regards,

Zoran Mrdja, P.Eng., FEC
DufkOQryd Ghvljq Lqf1
613-818-3884

'

This e-mail originates from the City of Ottawa e-mail system. Any distribution, use or copying of this e-mail or the information it contains by other than the intended recipient(s) is unauthorized. Thank you.

Le présent courriel a été expédié par le système de courriels de la Ville d'Ottawa. Toute distribution, utilisation ou reproduction du courriel ou des renseignements qui s'y trouvent par une personne autre que son destinataire prévu est interdite. Je vous remercie de votre collaboration.

'
'

This e-mail originates from the City of Ottawa e-mail system. Any distribution, use or copying of this e-mail or the information it contains by other than the intended recipient(s) is unauthorized. Thank you.

Le présent courriel a été expédié par le système de courriels de la Ville d'Ottawa. Toute distribution, utilisation ou reproduction du courriel ou des renseignements qui s'y trouvent par une personne autre que son destinataire prévu est interdite. Je vous remercie de votre collaboration.

'
'

This e-mail originates from the City of Ottawa e-mail system. Any distribution, use or copying of this e-mail or the information it contains by other than the intended recipient(s) is unauthorized. Thank you.

Le présent courriel a été expédié par le système de courriels de la Ville d'Ottawa. Toute distribution, utilisation ou reproduction du courriel ou des renseignements qui s'y trouvent par une personne autre que son destinataire prévu est interdite. Je vous remercie de votre collaboration.

'

Boundary Conditions for 817 Roseview Avenue

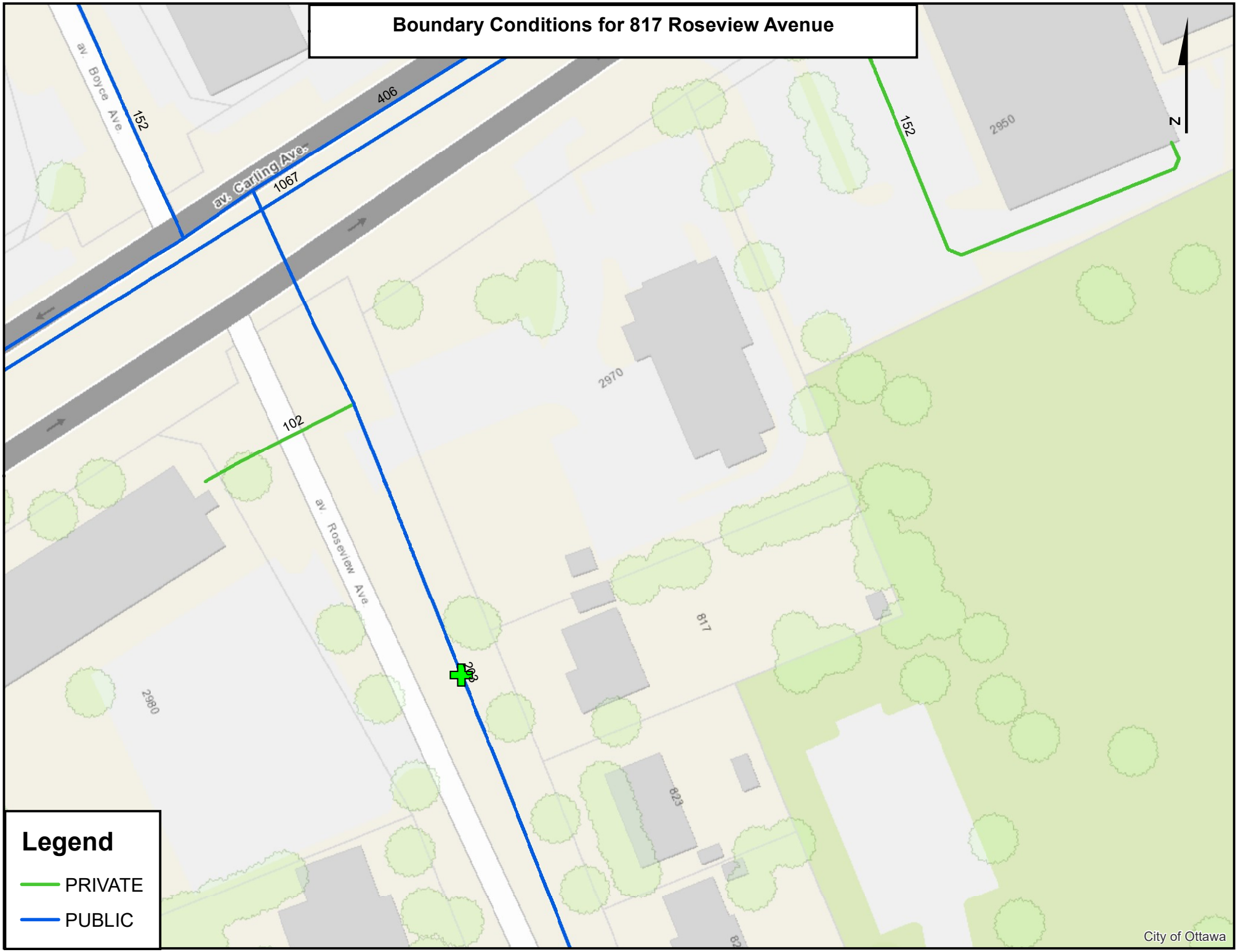

Appendix C: Guidelines, Existing Reports, Studies and References

The following studies were utilized in the preparation of this report:

- **Ottawa Sewer Design Guidelines**,

  City of Ottawa, SDG002, October 2012, amended 2019 & 2020. (City Standards)

  - Technical Bulletin ISTB-2018-01, City of Ottawa, March 21, 2018.
  - Technical Bulletin ISTB-2018-03, City of Ottawa, March 21, 2018.

- **Ottawa Design Guidelines – Water Distribution**

  City of Ottawa, July 2010., (Water Supply Guidelines)

  - Technical Bulletin ISD-2010-2, City of Ottawa, December 15, 2010.
  - Technical Bulletin ISDTB-2014-02, City of Ottawa, May 27, 2014.
  - Technical Bulletin ISDTB-2018-02, City of Ottawa, March 21, 2018.

- **Design Guidelines for Sewage Works,**

  Ministry of the Environment, 2008., (MOE Design Guidelines)

- **Stormwater Planning and Design Manual,**

  Ministry of the Environment, March 2003.,(SWMP Design Manual)

- **Ontario Building Code Compendium**

  Ministry of Municipal Affairs and Housing Building Development Branch, January 1, 2010 Update.(OBC)

- **Water Supply for Public Fire Protection**

  Fire Underwriters Survey, 1999., (FUS)

- **NFPA 13 – Standard for the Installation of Sprinkler Systems**

  National Fire Protection Association, 2016., (NFPA Standards)