Stormwater Management Report and Servicing Brief

CIV-7 Storey Condo Redevelopment
424 Churchill Avenue, Ottawa, ON

Prepared for:

Churchill Properties Inc.
145 Select Avenue
Unit 5, Toronto ON
M1V 5M8

Attention: Jemmy Taing

LRL File No.: 220224

October 11, 2022

5430 Canotek Road | Ottawa, ON, K1J 9G2 | info@lrl.ca | www.lrl.ca | (613) 842-3434

TABLE OF CONTENTS

1 INTRODUCTION AND SITE DESCRIPTION 1
2 EXISTING SITE AND DRAINAGE DESCRIPTION 2
3 SCOPE OF WORK 2
4 REGULATORY APPROVALS 3
5 WATER SUPPLY AND FIRE PROTECTION 3
5.1 Existing Water Supply Services and Fire Hydrant Coverage 3
5.2 Water Supply Servicing Design 3
6 SANITARY SERVICE 6
6.1 Existing Sanitary Sewer Services 6
6.2 Sanitary Sewer Servicing Design 6
7 STORMWATER MANAGEMENT **7**
7.1 Existing Stormwater Infrastructure 7
7.2 Design Criteria 7
7.2.1 Water Quality 7
7.2.2 Water Quantity 7
7.3 Method of Analysis 8
7.4 Proposed Stormwater Quantity Controls 8
8 EROSION AND SEDIMENT CONTROL **8**
9 CONCLUSION 10
10 REPORT CONDITIONS AND LIMITATIONS 10

APPENDICES

Appendix A Pre-consultation / Correspondence

Appendix B Water Supply Calculations

Appendix C Wastewater Collection Calculation

Appendix D Stormwater Management Calculation
Watts Roof Drain Specification

Appendix E Civil Engineering Drawings

Appendix F Proposed Site Plan, Legal Survey, As-builts

Appendix G Fire Hydrant Coverage

LIST OF TABLES

Table 1: Development Residential Population Estimate 4
Table 2: Institutional/ Commercial Demands 4
Table 3: Summary Of Boundary Conditions 5
Table 4: Fire Protection Summary Table 6
Table 5: Post-Development Estimated Areas & Runoff Coefficients 8
Table 6: Stormwater Release Rate & Storage Volume Summary (100 Year) 9

LIST OF FIGURES

Figure 1: Aerial View Of Subject Lands 1

1 INTRODUCTION AND SITE DESCRIPTION

LRL Associates Ltd. was retained by Churchill Properties Inc to complete a Stormwater Management Analysis and Servicing Brief for the development of a 7-storey condo building with 2 level of underground garage parking. Part of the work will include the demolition of a one-storey commercial building located on the site.

The subject property consists of one (1) lot with an existing one-storey commercial building. The lot is legally described as being part of Lot 1 and Part of Lot 2 (South Danforth Avenue) Registered Plan 204, in the City of Ottawa. The subject lot is zoned TM H (24) (Traditional Mainstreet Zone).

Figure 1: Aerial View of Subject Lands

The subject property is irregular shaped and measures approximately 55m in frontage along Danforth Avenue, 25.5m along Churchill Avenue and 50m along Byron Avenue. The total site area is approximately **0.101 Ha**.

The proposed development will be constructed in a single phase, which includes the demolition of the existing one-storey commercial building and the construction of the 7-storey condo building. Refer to ***Site Plan*** included in ***Appendix F*** for more details***.***

This report has been prepared in consideration of the terms and conditions noted above and with the civil drawings prepared for the new development. Should there be any changes in the design features, which may relate to the stormwater and servicing considerations, LRL Associates Ltd. should be advised to review the report recommendations.

2 EXISTING SITE AND DRAINAGE DESCRIPTION

The subject site measures ***0.101 ha*** and currently consists of a one-storey commercial building with associated asphalt parking and entrances, located along Byron Avenue and Churchill Avenue. The asphalt surface of the site is generally flat and slopes towards the North and East property lines. At the Northwest corner of the site there is a steep slope with tree cover that slopes down to Danforth Avenue. There is a drop of approximately 1m along the East property line, from the Southeast site corner and sloping down along Churchill Avenue towards Danforth Avenue. There is also a drop of approximately 6m along the northwest property line of the site, from the North property line down to Danforth Avenue. To accommodate for this drop there is an existing retaining wall which wraps around the northeast corner of the site and runs primarily along the North property line of the site. Part of the retaining wall is located just outside of the property line and part of it runs across the site along the treed area.

Sewer and watermain mapping, along with as-built information collected from the City of Ottawa indicate the following existing infrastructure located within the adjacent right-of-ways:

Churchill Avenue N:

- 300mm PVC sanitary sewer (2010)
- 300mm CONC storm sewer (2010)
- 400mm PVC watermain (2010)

Danforth Avenue:

- 225mm CONC sanitary sewer (1940)
- 150mm DI watermain (1984)

3 SCOPE OF WORK

As per applicable guidelines, the scope of work includes the following:

Stormwater management

- Calculate the allowable stormwater release rate.
- Calculate the anticipated post-development stormwater release rates.
- Demonstrate how the target quantity objectives will be achieved.

Water services

- Calculate the expected water supply demand at average and peak conditions.
- Calculate the required fire flow as per the Fire Underwriters Survey (FUS) method.
- Confirm the adequacy of water supply and pressure during peak flow and fire flow.
- Describe the proposed water distribution network and connection to the existing system.

Sanitary services

- Describe the existing sanitary sewers available to receive wastewater from the building.
- Calculate peak flow rates from the development.

- Describe the proposed sanitary sewer system.
- Review impact of increased sanitary flow on downstream sanitary sewer.

4 REGULATORY APPROVALS

An MECP Environmental Compliance Approval is not expected to be required for installation of the proposed storm and sanitary sewers within the site. A Permit to Take Water is not anticipated to be required for pumping requirements for sewer installation. The Rideau Valley Conservation Authority will need to be consulted to obtain municipal approval for site development. No other approval requirements from other regulatory agencies are anticipated.

5 WATER SUPPLY AND FIRE PROTECTION

5.1 Existing Water Supply Services and Fire Hydrant Coverage

The subject property lies within the City of Ottawa 1W water distribution network pressure zone. There is an existing 400 mm PVC watermain within Churchill Avenue N and a 150mm PVC watermain in Danforth Avenue. There are currently seven (7) existing fire hydrants within proximity to the subject property. Refer to ***Appendix B*** for the location of fire hydrants.

5.2 Water Supply Servicing Design

According to the City of Ottawa Water Distribution Guidelines (Technical Bulletin ISDTB-2014-02), since the subject site is anticipated to house more than 50 residential units, it is required to be serviced by two water service laterals, separated by an isolation valve, for redundancy and to avoid creation of a vulnerable service area. Additionally, considering the presence of automatic sprinkler system inside the building and a recommended size to service the sprinkler system, the subject property is proposed to be serviced via two (2) 150 mm diameter service laterals connected to the existing 406mm PVC watermain within Churchill Ave and the 152mm DI watermain located in Danforth Ave. Refer to *Site Servicing Plan* C.401 in ***Appendix E*** for servicing layout and connection points.

We have analyzed the water demand requirements for the proposed 7-storey condo building. The residential water demands, and anticipated population were determined using Appendix 4-A, Table 4.1 and Table 4.2 from the *City of Ottawa Water Distribution Design Guidelines* and Table 3-3 from the *MOE Design Guidelines for Drinking Water Systems*.

Through reviewing the architectural floor plans of the proposed building, it was determined that the building will have a total combined floorspace of **7,818 m^2**, **58** residential units, **1,670 m^2** of amenity space and **3** office spaces.

The water supply requirements for the residential units, office spaces and amenity space in the proposed development have been calculated using the following formulas:

$Q = (q \times P \times M)$, for the residential and office spaces and
$Q = (q \times A \times M)$, for the amenity space.

Where:
q = average water consumption (L/capita/day) or (L/ha/day)
P = design population (capita)
M = Peak factor
A = area (ha)

Residential

The proposed building will include **52** one-bedroom units and **6** two-bedroom units. Based on the City of Ottawa Design guidelines for population projection, this translates to approximately **85.4** residents. *Table 1* below summarizes the proposed residential population count as interpreted using Table 4-1 from the *City of Ottawa Water Distribution Design Guideline.*

Table 1: Development Residential Population Estimate

Proposed Unit Type	Persons Per Unit	Number of Units	Total Population
1 Bedroom	1.4	52	72.8
2 Bedroom	2.1	6	12.6
	Total	**58**	**85.4**

With reference to *Table 4.1 of the City of Ottawa Water Distribution Design Guidelines*, an average water consumption rate of 280 L/c/d was used. With reference to Table 3-3 of the MOE *Design Guidelines for Drinking Water Systems* a Maximum Daily Demand Factor and Maximum Hour Demand Factor were calculated to be 7.2 and 10.9, respectively. The anticipated residential demands were calculated as follows:

- Average daily domestic water demand is **0.28** L/s,
- Maximum daily demand is **2.00** L/s, and
- Maximum hourly demand is **3.01** L/s.

Commercial/Institutional

Appendix 4-A and *Table 4.2 of the City of Ottawa Water Distribution Design Guidelines* were used to determine the consumption rates and peak factors of the amenity and office spaces. A water consumption rate of 75L/p/d was used for office employees and a consumption rate of 28,000L/ha/d was used for the amenity space. The Maximum Daily Demand Factor and the Maximum Hourly Demand Factor were 1.5 and 1.8 respectively. *Table 2* below summarizes the proposed institutional/ commercial demands.

Table 2: Institutional/ Commercial Demands

Property Type	Unit	Rate	Units	Demand (L/d)
Office	75	L/p/d	3 people	**225.0**
Amenity Space	28,000	L/ha/d	0.0167 ha	**467.6**

Using the peak factors, the anticipated institutional and commercial demands were calculated as follows:

- Average daily domestic water demand is **0.008** L/s,
- Maximum daily demand is **0.012** L/s, and
- Maximum hourly demand is **0.022**L/s.

Combined - Residential/Commercial/Institutional

The combined peak factors for the site are anticipated to equal the following:

- Average daily domestic water demand is **0.28** L/s,
- Maximum daily demand is **2.01** L/s, and
- Maximum hourly demand is **3.03** L/s.

Refer to ***Appendix B*** for water demand calculations.

The City of Ottawa was contacted to obtain boundary conditions associated with the estimated water demand, as indicated in the boundary request correspondence included in ***Appendix B***. *Table 3* below summarizes boundary conditions for the proposed development.

Table 3: Summary of Boundary Conditions

Design Parameter	**Anticipated Demand (L/s)**	**Boundary Conditions @ Churchill Ave & Danforth Ave**	
		Connection 1* (m H2O / kPa)	**Connection 2** (m H2O / kPa)**
Average Daily Demand	0.28	41.21 / 404.13	44.04 / 431.88
Max Day + Max Fire Flow (per FUS)	2.01 + 216.7	35.61 / 349.22	15.04 / 147.49
Peak Hour	3.03	35.01 / 343.33	37.84 / 371.08
**Ground Elevation assumed at 73.69m for Connection 1 @ Churchill Ave*			
*** Ground Elevation assumed at 70.86m for Connection 2 @ Danforth Ave*			

As indicated in Table 3, pressures in all scenarios meet the required pressure range stated in the City of Ottawa Design Guidelines – Water Distribution (Section 4.2.2). Refer to ***Appendix B*** for Boundary Conditions.

The estimated fire flow for the proposed buildings was calculated in accordance with *ISTB-2018-02*. The following parameters were provided by the Architect:

- Type of construction – Non-combustible construction
- Occupancy type – Limited Combustible
- Sprinkler Protection –Fully Automatic Sprinkler System

The estimated fire flow demand was estimated to be **13,000 L/min**, see ***Appendix B*** for details.

There are ten (10) existing fire hydrants in proximity to the proposed buildings that are available to provide the required fire flow demands of 13,000 L/min. Refer to ***Appendix G*** for fire hydrant locations. Table 4 below summarizes the aggregate fire flow of the contributing hydrants in proximity to the proposed development based on Table 18.5.4.3 of *ISTB-2018-02*.

Table 4: Fire Protection Summary Table

	Max. Fire Flow Demand (L/min)	Fire Hydrants(s) within 75m	Fire Hydrant(s) within 150m	Fire Hydrant(s) within 300m	Available Combined Fire Flow (L/min)
Contemplated Development	13,000	2	4	4	(2 x 5678) + (4 x 3785) + (4 x 2839) = 37,852

The total available fire flow from contributing hydrants is equal to **37,852 L/min** which is sufficient to provide adequate fire flow for the proposed development. A certified fire protection system specialist will need to be employed to design the building's fire suppression system and confirm the actual fire flow demand.

The proposed water supply design conforms to all relevant City Guidelines and Policies.

6 SANITARY SERVICE

6.1 Existing Sanitary Sewer Services

There is an existing 300mm PVC Sanitary sewer located in Churchill Ave N and a 225mm CONC Sanitary Sewer located in Danforth Ave. It is anticipated that the contemplated development will be connected to the existing 3000mm PVC sanitary sewer located within Churchill Ave N, to be connected to the proposed building.

6.2 Sanitary Sewer Servicing Design

The proposed development will be serviced via a 150 mm dia. sanitary service connected to the existing 300mm diameter sanitary sewer within Churchill Avenue N. Refer to LRL drawing C.401, included in **Appendix F,** for the proposed sanitary servicing.

The parameters used to calculate the anticipated sanitary flows are residential average population per unit of 1.4 person for single units, 2.1 persons for two-bedroom units and a residential daily demand of 280 L/p/day, a residential peaking factor of 3.5 and a total infiltration rate of 0.33 L/s/ha. Based on these parameters and the total site area of 0.101 ha, the total anticipated wet wastewater flow was estimated to be **1.04 L/s**. Refer to ***Appendix C*** for the site sanitary sewer design sheet.

As requested in the pre-consultation with City staff, the calculated sanitary demands for the proposed development were coordinated with the City of Ottawa to confirm there is sufficient capacity in the downstream municipal sewers. As per correspondence attached, see ***Appendix C***, the downstream municipal sewers can sufficiently accommodate the increase in sanitary flows from the proposed development.

7 STORMWATER MANAGEMENT

7.1 Existing Stormwater Infrastructure

The subject property is tributary to the Ottawa River West sub-watershed. Stormwater runoff from the subject property is tributary to the City of Ottawa sewer system as such, approvals for the proposed development within this area are under the approval authority of the City of Ottawa.

There is an existing 300mm CONC storm sewer available in Churchill Avenue N. In the pre-development conditions, drainage from the subject lot is depicted by existing watershed EWS-01 (0.101ha), which drains towards the North and West property lines. Refer to plan C701 included in ***Appendix E*** for pre-development drainage characteristics. Refer to ***Appendix D*** for pre-development and post-development watershed information.

7.2 Design Criteria

The stormwater management criteria for this development are based on the pre-consultation with City of Ottawa officials, the City of Ottawa Sewer Design Guidelines including City of Ottawa Stormwater Management Design Guidelines, 2012 (City standards), as well as the Ministry of the Environment's Stormwater Management Planning and Design Manual, 2003 (SWMP Manual).

7.2.1 Water Quality

The subject property lies within the Ottawa River West sub-watershed and is therefore subject to review by the Rideau Valley Conservation Authority (RVCA). It was determined that water quality controls would not be required on this site as treatment would be handled by municipal infrastructure. Correspondence with RVCA is included in ***Appendix A***.

7.2.2 Water Quantity

Based on pre-consultation with the City, correspondence included in ***Appendix A***, the following stormwater management requirements were identified for the subject site:

- Meet an allowable release rate based on a Rational Method Coefficient of 0.50, employing the City of Ottawa IDF parameters for a 2-year storm with a calculated time of concentration equal to 10 minutes; and
- Attenuate all storms up to and including the City of Ottawa 100-year storm event on site.
- Water quality treatment will not be required on this site as the water being collected and conveyed to the storm system is rooftop water.

As per the pre-application consultation meeting with the City of Ottawa, it was recommended that it would be acceptable to control only the roof portion of the building up to the 100-year storm event, to a 2-year pre-development level and that the remainder of the site could be left uncontrolled as long as the uncontrolled portion is directed towards the right of way. Based on these stormwater objectives for the subject site, it was determined that the allowable release rate for the site is **10.81 L/s** for all storms up to and including the 100-year storm. Refer to ***Appendix D*** for calculations.

7.3 Method of Analysis

The Modified Rational Method has been used to calculate the runoff rate from the site to quantify the detention storage required for quantity control of the development. Refer to ***Appendix D*** for storage calculations.

7.4 Proposed Stormwater Quantity Controls

The proposed stormwater management quantity control for this development will be accomplished using rooftop storage and roof drains with controls. A proposed 250 mm PVC diameter storm sewer pipe will outlet stormwater flows from the site to the existing 300mm PVC storm sewer located within Churchill Avenue N. The proposed servicing layout and connection points are shown on drawing C.401 in ***Appendix E,*** and detailed calculations can be found in ***Appendix D***.

The site has been analyzed and six (6) post-development watersheds have been allocated.

WS-01 to WS-05 (0.070 ha) consist of the proposed building's roof envelope and will be captured via roof drains with controls.

WS-06 (0.031 ha) is uncontrolled and consists of the remainder of the site that is not part of the roof. Runoff from this area will be directed to the City Right of Way.

Refer to C601, Stormwater Management Plan and C702, Post-Development Watershed Plan C702 in ***Appendix E*** for reference.

Table 5 below summarizes post-development drainage areas. Calculations can be seen in ***Appendix D.***

Table 5: Post-Development Estimated Areas & Runoff Coefficients

WATERSHED	C = 0.90 Building Area/ Asphalt & Concrete (m^2)	Total Area (ha)	Weighted Runoff Coefficient (C)
WS-01(ROOF)	116.29	0.012	0.90
WS-02 (ROOF)	141.44	0.014	0.90
WS-03 (ROOF)	248.09	0.025	0.90
WS-04 (ROOF)	62.07	0.006	0.90
WS-05 (ROOF)	130.54	0.013	0.90
WS-06(UN-CONTROLLED)	313.97	0.031	0.90
TOTAL	**1012.4**	**0.101**	**0.38**

The proposed building's rooftop was analysed, and it was determined that there would be 32.63m^3 of roof storage available. A total of **ten (10)** roof drains would be used, each roof drain would have a restricted discharge rate of **0.63L/s**, resulting in a total release rate from the roof of **6.30 L/s** with a proposed head of 0.15m. The proposed roof drains are to be fully closed WATTS Adjustable Accutrol RD-100-A1. For calculations for available area of rooftop storage and for more information regarding the selected roof drain and flow restrictor, refer to ***Appendix D***. For additional details on the roof storage areas refer to drawing *C.601* in **Appendix E.**

Table 6 below summarizes the release rates and storage volumes required to meet the allowable release rate of **10.81 L/s** for 100-year flow rates.

Table 6: Stormwater Release Rate & Storage Volume Summary (100 Year)

CATCHMENT AREAS	DRAINAGE AREAS (ha)	100-YEAR RELEASE RATE (L/s)	100-YEAR REQUIRED STORAGE (m^3)	TOTAL AVAILABLE STORAGE (m^3)
WS-01(ROOF)	0.012	1.26	3.15	6.03
WS-02 (ROOF)	0.014	1.26	3.46	4.55
WS-03 (ROOF)	0.025	1.26	6.63	12.25
WS-04 (ROOF)	0.006	1.26	3.15	3.16
WS-05 (ROOF)	0.013	1.26	3.15	6.64
TOTAL CONTROLLED	**0.070**	**6.30**	**19.53**	**32.63**
WS-06 (UNCONTROLLED)	0.031	15.59	0	0
TOTAL UNCONTROLLED	**0.031**	**15.59**	**0.00**	**0.00**
TOTAL	**0.101**	**21.89**	**19.53**	**32.63**

To attenuate flows to the allowable release rate of **10.81 L/s**, it is calculated that a total of **19.53 m^3** of storage will be required on the roof top. The required storage is proposed to be met via the building rooftop ponding. The total required storage, storage available and allowable release rate is the following;

- **19.53 m^3** is required for rooftop storage in WS-01 corresponding to a maximum restricted flow of **6.30 L/s** via roof drain controls;
- There is **32.63 m^3** of available rooftop storage.

The 100-year maximum ponding extents can be found on drawing "C601 – Stormwater Management Plan" in ***Appendix E***.

8 Erosion and Sediment Control

During construction, erosion and sediment controls will be provided primarily via a sediment control fence to be erected along the perimeter of the site where runoff has the potential of leaving the site. Inlet sediment control devices are also to be provided in any catch basin and/or manholes in and around the site that may be impacted by the site construction. Construction and maintenance requirements for erosion and sediment controls are to comply with Ontario Provincial Standard Specification OPSS 577. For more details refer to drawing C101 Erosion and Sediment Control Plan in ***Appendix E***.

9 CONCLUSION

This Stormwater Management and Servicing Report for the development proposed at 424 Churchill Avenue N presents the rationale and details for the servicing requirements for the subject property.

In accordance with the report objectives, the servicing requirements for the development are summarized below:

Water Service

- The maximum required fire flow was calculated to be **13,000 L/min** using the FUS method.
- There are at least ten (10) existing fire hydrants available to service the proposed development. They will provide a combined fire flow of **37,852 L/min** to the site.
- The new development will be serviced via two (2) 150mm diameter services connected to the existing 406mm PVC watermain within Churchill Ave N and the 152mm DI watermain located in Danforth Ave.
- Boundary conditions received from the City of Ottawa indicate that sufficient pressure is available to service the proposed site.

Sanitary Service

- The total calculated wet wastewater flow from the proposed development is **1.04 L/s.**
- The proposed development will discharge **1.04 L/s** to the existing 300 mm PVC sanitary sewer within Churchill Avenue N via a proposed 150mm PVC sanitary service lateral.

Stormwater Management

- The stormwater release rates from the proposed development will meet the calculated allowable release rate of **10.81L/s.**
- As per the pre-application consultation meeting with the City of Ottawa, only the roof portion of the building will be controlled up to the 100-year storm event, to a 2-year pre-development level and the remainder of the site will be left uncontrolled and will be directed towards the right of way
- The site stormwater quantity control objectives will be met through ponding on the roof. 22.91m^3 of storage is required and there will be **32.60m^3** of available rooftop storage. Ten **(10)** area drains will be used to control the flows to **0.63L/s** each, which when combined will produce a controlled 100-year release rate of **6.30L/s**.
- The roof drains will each be WATTS Adjustable Accutrol RD-100-A1 that are fully closed.

10 REPORT CONDITIONS AND LIMITATIONS

The report conclusions are applicable only to this specific project described in the preceding pages. Any changes, modifications or additions will require a subsequent review by LRL Associates Ltd. to ensure the compatibility with the recommendations contained in this document.

If you have any questions or comments, please contact the undersigned.

Prepared by:
LRL Associates Ltd.

Tamara Harb, EIT, SPESC-IT
Civil Designer

Mohan Basnet, P. Eng.
Civil Engineer

APPENDIX A

Pre-consultation / Correspondence

Tamara Harb

From: Bakhit, Reza <reza.bakhit@ottawa.ca>
Sent: September 22, 2022 7:37 AM
To: Tamara Harb
Cc: Amr Salem
Subject: RE: LRL220224 - CIV 7-Storey Condo Redevelopment Boundary Conditions Request (Water and Sanitary)
Attachments: 424 Churchill Avenue September 2022.pdf

Hi,

The following are boundary conditions, HGL, for hydraulic analysis at 424 Churchill Avenue (zone 1W) assumed to be connected to the 406 mm watermain on Churchill Avenue and the 152 mm on Danforth Avenue (see attached PDF for location).

Both Connections:

Minimum HGL: 108.7 m

Maximum HGL: 114.9 m

Max Day + Fire Flow (216.7 L/s): 109.3 m (Churchill Connection) and 85.9 m (Danforth connection)

These are for current conditions and are based on computer model simulation.

Disclaimer: The boundary condition information is based on current operation of the city water distribution system. The computer model simulation is based on the best information available at the time. The operation of the water distribution system can change on a regular basis, resulting in a variation in boundary conditions. The physical properties of watermains deteriorate over time, as such must be assumed in the absence of actual field test data. The variation in physical watermain properties can therefore alter the results of the computer model simulation.

Reza Bakhit, P.Eng, C.E.T
Project Manager
Planning, Real Estate and Economic Development Department / Direction générale de la planification, des biens immobiliers et du développement économique
Development Review - Centeral Branch
City of Ottawa | Ville d'Ottawa
110 Laurier Avenue West Ottawa, ON | 110, avenue. Laurier Ouest. Ottawa (Ontario) K1P 1J1
613.580.2424 ext./poste 19346, reza.bakhit@ottawa.ca
Please note: Given the current pandemic, I will be working from home until further notice; reaching me by email is the easiest. I will be checking my voicemail, just not as frequently as I normally would be.

From: Tamara Harb <tharb@lrl.ca>
Sent: Wednesday, September 07, 2022 11:03 AM
To: Bakhit, Reza <reza.bakhit@ottawa.ca>
Cc: Amr Salem <asalem@lrl.ca>
Subject: LRL220224 - CIV 7-Storey Condo Redevelopment Boundary Conditions Request (Water and Sanitary)

CAUTION: This email originated from an External Sender. Please do not click links or open attachments unless you recognize the source.

Tamara Harb

From: Bakhit, Reza <reza.bakhit@ottawa.ca>
Sent: September 19, 2022 7:36 AM
To: Tamara Harb
Cc: Amr Salem
Subject: RE: LRL220224 - CIV 7-Storey Condo Redevelopment Boundary Conditions Request (Water and Sanitary)

Hi Tamara,

Not sure if I sent you this email, but just in case, please note that there is no concern with the proposed SAN flow .

Thanks,

Reza Bakhit, P.Eng, C.E.T
Project Manager
Planning, Real Estate and Economic Development Department / Direction générale de la planification, des biens immobiliers et du développement économique
Development Review - Centeral Branch
City of Ottawa | Ville d'Ottawa
110 Laurier Avenue West Ottawa, ON | 110, avenue. Laurier Ouest. Ottawa (Ontario) K1P 1J1
613.580.2424 ext./poste 19346, reza.bakhit@ottawa.ca
Please note: Given the current pandemic, I will be working from home until further notice; reaching me by email is the easiest. I will be checking my voicemail, just not as frequently as I normally would be.

From: Tamara Harb <tharb@lrl.ca>
Sent: Wednesday, September 07, 2022 11:03 AM
To: Bakhit, Reza <reza.bakhit@ottawa.ca>
Cc: Amr Salem <asalem@lrl.ca>
Subject: LRL220224 - CIV 7-Storey Condo Redevelopment Boundary Conditions Request (Water and Sanitary)

CAUTION: This email originated from an External Sender. Please do not click links or open attachments unless you recognize the source.

ATTENTION : Ce courriel provient d'un expéditeur externe. Ne cliquez sur aucun lien et n'ouvrez pas de pièce jointe, excepté si vous connaissez l'expéditeur.

Good morning Reza,

I would like to request boundary conditions for the development of a 7-storey condo building located at 424 Churchill Ave, Ottawa ON.

Water Connection
We are proposing two water service laterals connected to the existing 400mm municipal watermain in Churchill Avenue and the existing 150mm municipal watermain in Danforth Avenue. Please provide the boundary conditions for the proposed building using the following proposed development demands:

- Type of development: **7 Storey condo building with 2 levels of underground parking and 58 units (52 one-bedroom & 6 two-bedroom)**

From:	Bakhit, Reza
To:	Gauthier, Steve
Subject:	PC2022-0016 Pre-application Consultation Meeting 424 Churchill Avenue N
Date:	Tuesday, March 8, 2022 4:48:37 PM
Attachments:	oledata.mso image021.png image001.emz image003.png

---

Hi Steve

Please forward the below information to the applicant regarding a development proposal at **424 Churchill Avenue N, Ottawa for the 9 story apartment building.**. Note that the information is considered **preliminary** and the assigned Development Review Project Manager may modify and/or add additional requirements and conditions upon review of an application if deemed necessary.

General:

- It is the sole responsibility of the consultant to investigate the location of existing underground utilities in the proposed servicing area and submit a request for locates to avoid conflict(s). The location of existing utilities and services shall be documented on an **Existing Conditions Plan**.
- Any easements on the subject site shall be identified and respected by any development proposal and shall adhere to the conditions identified in the easement agreement. A **legal survey plan** shall be provided and all easements shall be shown on the engineering plans.
- A deep excavation and dewatering operations have the potential to cause damages to the neighboring adjacent buildings/ City infrastructure. Document that construction activities (excavation, dewatering, vibrations associated with construction, etc.) will not have an impact on any adjacent buildings and infrastructure.
- A **Record of Site Condition (RSC) in accordance with O.Reg.** 153/04 will be required to be filed and acknowledged by the Ministry prior to issuance of a building permit due to a change to a more sensitive property use.

0. Reference documents for information purposes :
    - Ottawa Sewer Design Guidelines (October 2012)
    - Technical Bulletin PIEDTB-2016-01
    - Technical Bulletins ISTB-2018-01, ISTB-2018-02 and ISTB-2018-03.
    - Ottawa Design Guidelines - Water Distribution (2010)
    - Technical Bulletin ISTB-2021-03
    - Geotechnical Investigation and Reporting Guidelines for Development Applications in the City of Ottawa (2007)
    - City of Ottawa Slope Stability Guidelines for Development Applications (revised 2012)
    - City of Ottawa Environmental Noise Control Guidelines (January 2016)
    - City of Ottawa Accessibility Design Standards (2012) (City recommends development be in accordance with these standards on private property)
    - Ottawa Standard Tender Documents (latest version)
    - Ontario Provincial Standards for Roads & Public Works (2013)
    - Record drawings and utility plans are also available for purchase from the City (Contact the City's Information Centre by email at InformationCentre@ottawa.ca or by phone at (613) 580-424 x.44455).

Please note that this is the applicant responsibility to refer to the latest applicable guidelines while preparing reports and studies.

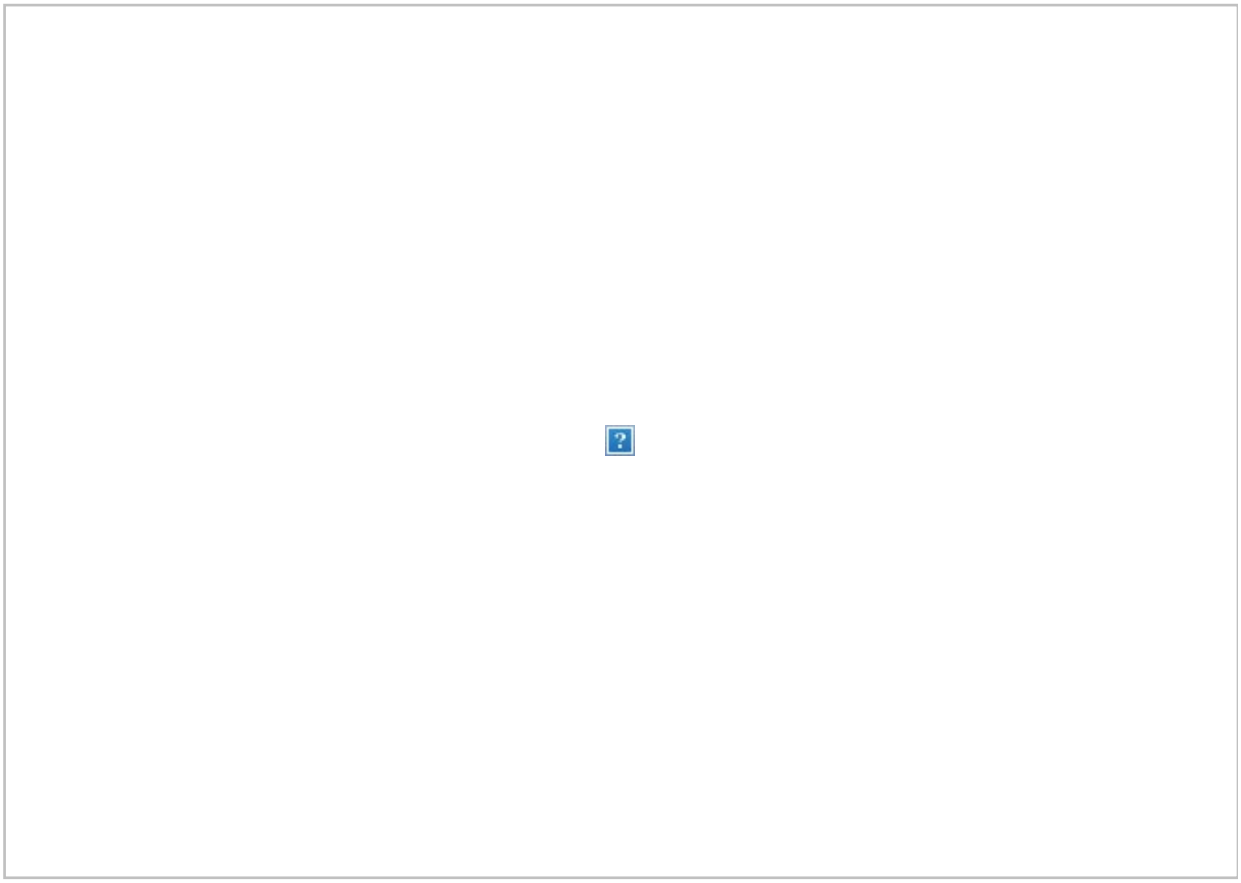

Disclaimer:
The City of Ottawa does not guarantee the accuracy or completeness of the data and information contained on the above image(s) and does not assume any responsibility or liability with respect to any damage or loss arising from the use or interpretation of the image(s) provided. This image is for schematic purposes only.

Stormwater Management Criteria and Information:

- **Water Quantity Control:** In the absence of area specific SWM criteria please control post-development runoff from the subject site, up to and including the **100-year storm event**, to **a 2-year pre-development level.** The pre-development runoff coefficient will need to be determined **as per existing conditions** but in no case more than 0.5. [**If 0.5 applies it needs to be clearly demonstrated in the report that the pre-development runoff coefficient is greater than 0.5**]. The time of concentration (T_c) used to determine the pre-development condition should be calculated. *Tc should not be less than 10 min. since IDF curves become unrealistic at less than 10 min; T_c of 10 minutes shall be used for all post-development calculations*].
- Any storm events greater than the established **2-year allowable** release rate, up to and including the **100-year storm event**, shall be detained on-site. The SWM measures required to avoid impact on downstream sewer system will be subject to review.
- Please note that foundation drainage is to be independently connected to sewer main unless being pumped with appropriate back up power, sufficient sized pump and back flow prevention. **It is recommended that the foundation drainage system be drained by a sump pump connection to the storm sewer to minimize risk of basement flooding as it will provide the best protection from the uncontrolled sewer system compared to relying on the backwater valve.**

Water Quality Control: Please consult with the local conservation authority (RVCA) regarding water quality criteria prior to submission of a Site Plan Control Proposal application to establish any water quality control restrictions, criteria and measures for the site. Correspondence and clearance shall be provided in the Appendix of the report.

- Please note that as per *Technical Bulletin PIEDTB-2016-01 section 8.3.11.1 (p.12 of 14)* **there shall be no surface ponding on private parking areas during the 5-year storm rainfall event**.
- **If Underground Storage proposed:** Please note that the Modified Rational Method for storage computation in the Sewer Design Guidelines was originally intended to be used for above ground storage (i.e. parking lot) where the change in head over the orifice varied from 1.5 m to 1.2 m (assuming a 1.2 m deep CB and a max ponding depth of 0.3 m). This change in head was small and hence the release rate fluctuated little, therefore there was no need to use an average release rate.

  When underground storage is used, the release rate fluctuates from a maximum peak flow based on maximum head down to a release rate of zero. This difference is large and has a significant impact on storage requirements. **We therefore require that an average release rate equal to 50% of the peak allowable rate shall be applied to estimate the required volume. Alternatively, the consultant may choose to use a submersible pump in the design to ensure a constant release rate.**

  In the event that there is a disagreement from the designer regarding the required storage, The City will require that the designer demonstrate their rationale utilizing dynamic modelling, that will then be reviewed by City modellers in the Water Resources Group.

  Please provide information on UG storage pipe. Provide required cover over pipe and details, chart of storage values, capacity etc. How will this pipe be cleaned of sediment and debris?

  Provide information on type of underground storage system including product name and model, number of chambers, chamber configuration, confirm invert of chamber system, top of chamber system, required cover over system and details, interior bottom slope (for self-cleansing), chart of storage values, length, width and height, capacity, entry ports (maintenance) etc.

  Provide a cross section of underground chamber system showing invert and obvert/top, major and minor HWLs, top of ground, system volume provided during major and minor events. UG storage to provide actual 2- and 100-year event storage requirements.

  In regard to all proposed UG storage, ground water levels (and in particular HGW levels) will need to be reviewed to ensure that the proposed system does not become surcharged and thereby ineffective.

  Modeling can be provided to ensure capacity for both storm and sanitary sewers for the proposed development by City's Water Distribution Dept. – Modeling Group, through PM and upon request.

  -
- Please note that the minimum orifice dia. for a plug style **ICD is 83mm and the minimum flow rate from a vortex ICD is 6 L/s** in order to reduce the likelihood of plugging.
- Post-development site grading shall match existing property line grades in order to minimize disruption to the adjacent residential properties. A **topographical plan of survey** shall be provided as part of the submission and a note provided on the plans.
- Please provide a **Pre-Development Drainage Area Plan** to define the pre-development drainage areas/patterns. **Existing drainage patterns shall be maintained and discussed as part of the proposed SWM solution**.
- **If rooftop control** and storage is proposed as part of the SWM solutions sufficient details (Cl. 8.3.8.4) shall be discussed and document in the report and on the plans. Roof drains are to be connected downstream of any incorporated ICDs within the SWM system and not to the

foundation drain system. Provide a **Roof Drain Plan** as part of the submission.

- **Considering the size of the site, it would be acceptable to control the roof portion only (100-year storm event, to a 2-year pre-development level) and leave the remainder of the site uncontrol as long as the uncontrolled portion is directed towards the right of way. This approach should be discussed in the SWM report. Also, the grading plan should clearly demonstrate that the runoff from the uncontrolled portion of the site will be directed towards the ROW**
- If **Window wells** are proposed, they are to be indirectly connected to the footing drains. A detail of window well with indirect connection is required, as is a note at window well location speaking to indirect connection.
- There must be at least **15cm of vertical clearance** between the spill elevation and the ground elevation at the building envelope that is in proximity of the flow route or ponding area. The exception in this case would be at reverse sloped loading dock locations. At these locations, a minimum of 15cm of vertical clearance must be provided below loading dock openings. Ensure to provide discussion in report and ensure grading plan matches if applicable.

Storm Sewer:

- A 300mm dia. CONC storm sewer (2010) is available within Churchill Avenue N**.**

Sanitary Sewer Maclaren St:

- A 250 mm dia. PVC Sanitary sewer (2010) is available within Churchill Avenue N**.**
- A 225 mm dia. CONC Sanitary sewer (1940) is available within Danforth Avenue.
- Please provide the new Sanitary sewer discharge and we confirm if sanitary sewer main has the capacity. An analysis and demonstration that there is sufficient/adequate residual capacity to accommodate any increase in wastewater flows in the receiving and downstream wastewater system is required to be provided. Needs to be demonstrated that there is adequate capacity to support any increase in wastewater flow.
- Please apply the wastewater design flow parameters *in Technical Bulletin PIEDTB-2018-01.*
- Sanitary sewer monitoring maintenance hole is required to be installed at the property line (on the private side of the property) as per City of Ottawa Sewer-Use By-Law 2003-514 (14) *Monitoring Devices*.
- A backwater valve is required on the sanitary service for protection.

Water :

- A 406 mm dia. PVC watermain (2010) is available within Churchill Avenue N**.**
- A 152 mm dia. DI watermain (1984) is available within Danforth Avenue.
- Existing residential service to be blanked at the main.
- **Water Supply Redundancy:** Residential buildings with a basic day demand greater than 50m^3/day (0.57 L/s) are required to be connected to a minimum of two water services separated by an isolation valve to avoid a vulnerable service area as per the *Ottawa Design Guidelines - Water Distribution, WDG001, July 2010 Clause 4.3.1 Configuration.*
- Please **review Technical Bulletin ISTB-2018-0**, maximum fire flow hydrant capacity is provided in Section 3 Table 1 of Appendix I. A **hydrant coverage figure** shall be provided and **demonstrate there is adequate fire protection for the proposal**. Two or more public hydrants are anticipated to be required to handle fire flow.
- Boundary conditions are required to confirm that the require fire flows can be achieved as well as availability of the domestic water pressure on the City street in front of the development. Use Table 3-3 of the MOE Design Guidelines for Drinking-Water System to determine Maximum Day and Maximum Hour peaking factors for 0 to 500 persons and use Table 4.2 of

the Ottawa Design Guidelines, Water Distribution for 501 to 3,000 persons. Please provide the following information to the City of Ottawa via email to request water distribution network boundary conditions for the subject site. Please note that once this information has been provided to the City of Ottawa it takes approximately 5-10 business days to receive boundary conditions.

0. Type of Development and Units
1. Site Address
2. A plan showing the proposed water service connection location.
3. **Average Daily Demand** (L/s)
4. **Maximum Daily Demand** (L/s)
5. **Peak Hour Demand** (L/s)
6. **Fire Flow** (L/min)

[*Fire flow demand requirements shall be based on **Fire Underwriters Survey (FUS)** Water Supply for Public Fire Protection 1999*]
[Fire flow demand requirements shall be based on ISTB-2021-03]
Note: The OBC method can be used if the fire demand for the private property is less than 9,000 L/min. If the OBC fire demand reaches 9000 L/min, then the FUS method is to be used.
Exposure separation distances shall be defined on a figure to support the FUS calculation and required fore flow (RFF).

7. **Hydrant capacity shall be assessed to demonstrate the RFF can be achieved**. Please identify which hydrants are being considered to meet the RFF on a fire hydrant coverage plan as part of the boundary conditions request.

Snow Storage:

0. Any portion of the subject property which is intended to be used for permanent or temporary snow storage shall be as shown on the approved site plan and grading plan. Snow storage shall not interfere with approved grading and drainage patters or servicing. Snow storage areas shall be setback from the property lines, foundations, fencing or landscaping a minimum of 1.5m. Snow storage areas shall not occupy driveways, aisles, required parking spaces or any portion of a road allowance. If snow is to be removed from the site please indicate this on the plan(s).

Gas pressure regulating station

A gas pressure regulating station may be required depending on HVAC needs (typically for 12+ units). Be sure to include this on the Grading, Site Servicing, SWM and Landscape plans. This is to ensure that there are no barriers for overland flow routes (SWM) or conflicts with any proposed grading or landscape features with installed structures and has nothing to do with supply and demand of any product.

Regarding Quantity Estimates:

Please note that external Garbage and/or bicycle storage structures are to be added to QE under Landscaping as it is subject to securities.In addition, sump pumps for Sanitary and Storm laterals and/or cisterns are to be added to QE under Hard items as it is subject to securities, even though it is internal and is spoken to under SWM and Site Servicing Report and Plan.

CCTV sewer inspection

CCTV sewer inspection required for pre and post construction conditions to ensure no damage to City Assets surrounding site.

Pre-Construction Survey

Pre-Construction (Piling/Hoe Ramming or close proximity to City Assets) and/or Pre-Blasting (if applicable) Survey required for any buildings/dwellings in proximity of 75m of site and circulation of notice of vibration/noise to residents within 150 m of site. Conditions for Pre-Construction/ Pre-Blast Survey & Use of Explosives will be applied to agreements. Refer to City's Standard S.P. No. F-1201 entitled Use of Explosives, as amended.

Road Reinstatement

Where servicing involves three or more service trenches, either a full road width or full lane width 40 mm asphalt overlay will be required, as per amended Road Activity By-Law 2003-445 and City Standard Detail Drawing R10. The amount of overlay will depend on condition of roadway and width of roadway(s).

Required Engineering Plans and Studies:

PLANS:

- Existing Conditions and Removals Plan
- Site Servicing Plan
- Grade Control and Drainage Plan
- Erosion and Sediment Control Plan
- Roof Drainage Plan (When rooftop storage is proposed)
- Topographical survey

REPORTS:

- Site Servicing and Stormwater Management Report (is required per section 4.7.1, policy 6 and section 4.7.1, policy 23 of the OP
- Geotechnical Study/Investigation (including sensitive marine clays and unstable slopes) is required per section 10.1.4 of OP
- Noise Control Study required as per section 10.2.1
- Phase I ESA 4) A Phase 1 and, where required, a Phase 2 ESA are required per section 10.1.6 OP
- Phase II ESA (Depending on recommendations of Phase I ESA) . It appears the site is contaminated .
- RSC (Record of the site Conditions)
- Site lighting certificate
- Wind analysis
- Shadow Study

Please refer to the **City of Ottawa Guide to Preparing Studies and Plans [Engineering]:**
Specific information has been incorporated into both the Guide to Preparing Studies and Plans for a site plan. The guide outlines the requirement for a statement to be provided on the plan about where the property boundaries have been derived from.
Added to the general information for servicing and grading plans is a note that an **O.L.S**. should be engaged when reporting on or relating information to property boundaries or existing conditions. The importance of engaging an O.L.S. for development projects is emphasized.

Phase One Environmental Site Assessment:

- A Phase I ESA is required to be completed in accordance with Ontario Regulation 153/04 in

support of this development proposal to determine the potential for site contamination. Depending on the Phase I recommendations a Phase II ESA may be required.
- The Phase I ESA shall provide all the required Environmental Source Information as required by O. Reg. 153/04. ERIS records are available to public at a reasonable cost and need to be included in the ESA report to comply with O.Reg. 153/04 and the Official Plan. The City will not be in a position to approve the Phase I ESA without the inclusion of the ERIS reports.
- Official Plan Section 4.8.4:

https://ottawa.ca/en/city-hall/planning-and-development/official-plan-and-master-plans/official-plan/volume-1-official-plan/section-4-review-development-applications#4-8-protection-health-and-safety

RSC (Record of the site Conditions)

- A RSC is required when changing the land use (zoning) of a property to a more sensitive land use.

Submitting a record of site condition | Ontario.ca

Geotechnical Investigation:

- A Geotechnical Study/Investigation shall be prepared in support of this development proposal.
- Reducing the groundwater level in this area can lead to potential damages to surrounding structures due to excessive differential settlements of the ground. The impact of groundwater lowering on adjacent properties needs to be discussed and investigated to ensure there will be no short term and long term damages associated with lowering the groundwater in this area.
- Geotechnical Study shall be consistent with the **Geotechnical Investigation and Reporting Guidelines for Development Applications**.

https://documents.ottawa.ca/sites/documents/files/geotech_report_en.pdf

Noise Study:

- A **Transportation Noise Assessment** is required as the subject development is located within 100m proximity of an Arterial Road
- A **Stationary Noise Assessment** is required in order to assess the noise impact of the proposed sources of stationary noise (mechanical HVAC system/equipment) of the development onto the surrounding residential area to ensure the noise levels do not exceed allowable limits specified in the City Environmental Noise Control Guidelines.

https://documents.ottawa.ca/sites/default/files/documents/enviro_noise_guide_en.pdf

Wind analysis:

0. A wind analysis must be prepared, signed and stamped by an engineer who specializes in pedestrian level wind evaluation. Where a wind analysis is prepared by a company which do not have extensive experience in pedestrian level wind evaluation, an independent peer review may be required at the expense of the proponent.

Terms of Reference: Wind Analysis (ottawa.ca)

Shadow Study

When greater than 9 storey in height, a Shadow Study required for all buildings/dwellings.

Exterior Site Lighting:

1. Any proposed light fixtures (both pole-mounted and wall mounted) must be part of the approved Site Plan. All external light fixtures must meet the criteria for Full Cut-off Classification as recognized by the Illuminating Engineering Society of North America (IESNA or IES), and must result in minimal light spillage onto adjacent properties (as a guideline, 0.5 fc is normally the maximum allowable spillage). In order to satisfy these criteria, the please provide the City with a **Certification (Statement) Letter** from an acceptable professional engineer stating that the design is compliant.

Fourth (4th) Review Charge:

Please be advised that additional charges for each review, after the 3rd review, will be applicable to each file. There will be no exceptions.

Construction approach – Please contact the Right-of-Ways Permit Office TMconstruction@ottawa.ca early in the Site Plan process to determine the ability to construct site and copy File Lead Steve.Gauthier@ottawa.ca on this request.

Please note that these comments are considered preliminary based on the information available to date and therefore maybe amended as additional details become available and presented to the City. It is the responsibility of the applicant to verify the above information. The applicant may contact me for follow-up questions related to engineering/infrastructure prior to submission of an application if necessary.

If you have any questions or require any clarification, please let me know.

Regards,

Reza Bakhit, P.Eng, C.E.T
Project Manager
Planning, Real Estate and Economic Development Department / Direction générale de la planification, des biens immobiliers et du développement économique
Development Review - Centeral Branch
City of Ottawa | Ville d'Ottawa
110 Laurier Avenue West Ottawa, ON | 110, avenue. Laurier Ouest. Ottawa (Ontario) K1P 1J1
613.580.2400 ext./poste 19346, reza.bakhit@ottawa.ca
Please note: Given the current pandemic, I will be working from home until further notice; reaching me by email is the easiest. I will be checking my voicemail, just not as frequently as I normally would be.

APPENDIX B

Water Supply Calculations

Water Supply Calculations

LRL File No.	220224
Date	2022-09-07
Prepared by	Tamara Harb

Water Demand based on the City of Ottawa Design Guidelines-Water Distribution, 2010

Domestic Demand			
Unit Type	**Persons Per Unit**	**Number of Units**	**Population**
1 Bedroom Apartment	1.4	52	72.8
2 Bedroom Apartment	2.1	6	12.6
	Total	**58**	**85.4**

**Based on a daily demand of 280L/day per person as identified by Appendix 4-A of the Sewer design guidelines.*

Average Water Consumption Rate	280	L/c/d			
Average Day Demand	**23,912**	**L/d**		**0.28**	**L/s**
Maximum Day Factor	7.2		Table (3-3) MOE Peaking Factors		
Maximum Daily Demand	**172,910**	**L/d**		**2.00**	**L/s**
Peak Hour Factor	10.9		Table (3-3) MOE Peaking Factors		
Maximum Hour Demand	**260,015**	**L/d**		**3.01**	**L/s**

Institutional / Commercial / Industrial Demand					
Property Type	**Unit Rate**		**Units**		**Demand (L/d)**
Office	75	L/p/d	3	people	225.0
Amenities	28000	L/ha/d	0.0167	ha	467.6

Average Day Demand	**693**	**L/d**		**0.008**	**L/s**
Maximum Day Factor	1.5		(Design Guidelines-Water Distribution Table 4.2)		
Maximum Daily Demand	**1,039**	**L/d**		**0.012**	**L/s**
Peak Hour Factor	1.8		(Design Guidelines-Water Distribution Table 4.2)		
Maximum Hour Demand	**1,870**	**L/d**		**0.022**	**L/s**

TOTAL DEMAND				
Average Day Demand	**24,605**	**L/d**	**0.28**	**L/s**
Maximum Daily Demand	**173,949**	**L/d**	**2.01**	**L/s**
Maximum Hour Demand	**261,885**	**L/d**	**3.03**	**L/s**

Water Service Pipe Sizing

Q = VA

Where: V = velocity
A = area of pipe
Q = flow rate

Assuming a maximum velocity of 1.8m/s, the diameter of pipe is calculated as:

Minimum pipe diameter (d) =	$(4Q/\pi V)^{1/2}$	
=	0.046	m
=	46	mm
Proposed pipe diameter (d) =	**150**	mm
=	**6**	Inches

Fire Flow Calculations

LRL File No.	220224
Date	September 8, 2022
Method	Fire Underwriters Survey (FUS)
Prepared by	Tamara Harb

Step	Task	Term	Options	Multiplier	Choose:	Value	Unit	Fire Flow
Structural Framing Material								
1	Choose frame used for building	Coefficient C related to the type of construction	Wood Frame	1.5	Non-combustible construction	**0.8**		
			Ordinary Construction	1.0				
			Non-combustible construction	0.8				
			Fire resistive construction <2 hrs	0.7				
			Fire resistive construction >2 hrs	0.6				
Floor Space Area (A)								
2	Total area					**6,961**	m^2	
3	Obtain fire flow before reductions	Required fire flow *(rounded to nearest 1,000 L/min)*	Fire Flow = 220 x C x $A^{0.5}$				L/min	**15,000**
Reductions or surcharge due to factors affecting burning								
4	Choose combustibility of contents	Occupancy hazard reduction or surcharge	Non-combustible	-25%	Limited combustible	**-15%**	L/min	**12,750**
			Limited combustible	-15%				
			Combustible	0%				
			Free burning	15%				
			Rapid burning	25%				
5	Choose reduction for sprinklers	Sprinkler reduction	Full automatic sprinklers	-30%	True	**-30%**	L/min	**7,650**
			Water supply is standard for both the system and fire department hose lines	-10%	True	**-10%**		
			Fully supervised system	-10%	False	**0%**		
6	Choose separation	Exposure distance between units	North side	>30m	0%		L/min	**13,388**
			West side	0 to 3m	25%			
			East side	20.1 to 30m	10%			
			South side	20.1 to 30m	10%	**45%**		
Net required fire flow								
7	Obtain fire flow, duration, and volume				Minimum required fire flow rate (rounded to nearest 1000)		L/min	**13,000**
					Minimum required fire flow rate		L/s	**216.7**
					Required duration of fire flow		hr	**2.75**

APPENDIX C

Wastewater Collection Calculations

LRL File No. 220224
Project: CIV 7 Storey Condo Redevelopment
Location: 424 Churchill Avenue
Date: September 6,2022

Sanitary Design Parameters

Commercial & Institutional Flow = 28000 L/ha/day
Light Industrial Flow = 35000 L/ha/day
Heavy Industrial Flow = 55000 L/ha/day
Maximum Residential Peak Factor = 4.0
Commercial & Institutional Peak Factor = 1.5
Average Daily Flow = 280 L/p/day
Daily Flow for Places of Employment = 75L/p/day
Industrial Peak Factor = as per Appendix 4-B = 7
Extraneous Flow = 0.33L/s/gross ha

Pipe Design Parameters

Minimum Velocity = 0.60 m/s
Manning's n = 0.013

LOCATION			RESIDENTIAL AREA AND POPULATION						COMMERCIAL		INDUSTRIAL			OFFICE		C+I+I	INFILTRATION			TOTAL FLOW (l/s)	PIPE					
STREET	FROM	TO	AREA (Ha)	POP.	CUMMULATIVE AREA (Ha)	CUMMULATIVE POP.	PEAK FACT.	PEAK FLOW (l/s)	AREA (Ha)	ACCU. AREA (Ha)	AREA (Ha)	ACCU. AREA (Ha)	PEAK FACT.	POP	ACCU. POP	PEAK FLOW (l/s)	TOTAL AREA (Ha)	ACCU. AREA (Ha)	INFILT. FLOW (l/s)		LENGTH (m)	DIA. (mm)	SLOPE (%)	MATERIAL	CAP. (FULL) (l/s)	VEL. (FULL) (m/s)
Churchill Ave	Bldg	PROP SAN MH01	0.101	85.4	0.101	85.4	3.6	1.00	0.017	0.017	0.00	0.00	7.0	3.0	3.0	0.01	0.101	0.101	0.03	**1.04**	13.1	150	2.00%	PVC	**21.54**	**1.22**

NOTES: Existing inverts and slopes are estimated. They are to be confirmed on-site.

Designed: **TH**	PROJECT: **CIV 7-Storey Condo Redevelopment**		
Checked: **AS**	LOCATION: **424 Churchil Avenue**		
Dwg. Reference: **C.401**	File Ref.: **220224**	Date: **2022-09-06**	Sheet No. 1 of 1

APPENDIX D

Stormwater Management Calculations
Watts Roof Drain Specification

ADJUSTABLE ACCUTROL (for Large Sump Roof Drains only)

For more flexibility in controlling flow with heads deeper than 2", Watts Drainage offers the Adjustable Accutrol. The Adjustable Accutrol Weir is designed with a single parabolic opening that can be covered to restrict flow above 2" of head to less than 5 gpm per inch, up to 6" of head. To adjust the flow rate for depths over 2" of head, set the slot in the adjustable upper cone according to the flow rate required. Refer to Table 1 below.
Note: Flow rates are directly proportional to the amount of weir opening that is exposed.

EXAMPLE:

For example, if the adjustable upper cone is set to cover 1/2 of the weir opening, flow rates above 2" of head will be restricted to 2-1/2 gpm per inch of head.

Therefore, at 3" of head, the flow rate through the Accutrol Weir that has 1/2 the slot exposed will be:
[5 gpm(per inch of head) x 2 inches of head] + 2-1/2 gpm(for the third inch of head) = 12-1/2 gpm.

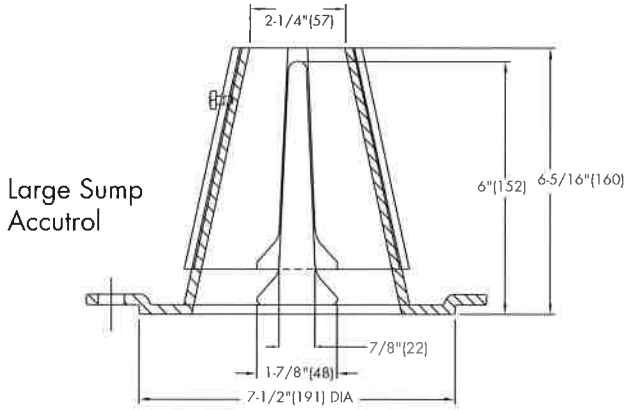

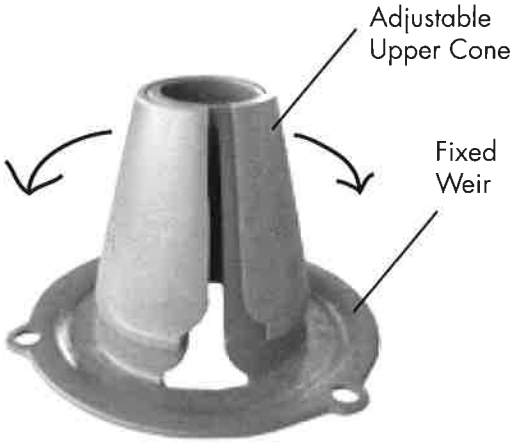

1/2 Weir Opening Exposed Shown Above

TABLE 1. Adjustable Accutrol Flow Rate Settings

Weir Opening Exposed	Head of Water					
	1"	2"	3"	4"	5"	6"
	Flow Rate (gallons per minute)					
Fully Exposed	5	10	15	20	25	30
3/4	5	10	13.75	17.5	21.25	25
1/2	5	10	12.5	15	17.5	20
1/4	5	10	11.25	12.5	13.75	15
Closed	5	10	10	10	10	10

Job Name _____ **Model No.** _____

Job Location _____ Contractor _____

Engineer _____ Representative _____

WATTS®

WATTS Drainage reserves the right to modify or change product design or construction without prior notice and without incurring any obligation to make similar changes and modifications to products previously or subsequently sold. See your WATTS Drainage representative for any clarification. Dimensions are subject to manufacturing tolerances.

CANADA

Specification Drainage Products

CANADA: 5435 North Service Road, Burlington, ON, L7L 5H7 TEL: 905-332-6718 TOLL-FREE: 1-888-208-8927 Website: www.wattscanada.ca

ACCUTROL WEIR FLOW CONTROL

SPECIFICATION: Watts Drainage Products epoxy coated cast iron Accutrol Weir is designed with parabolic openings which limit the flow of rain water off a roof. Each weir slot controls flow to 5 gpm per inch of head to a maximum of 30 gpm at 6" head(for large sump), 25 gpm at 5" head(for small sump) . The Accutrol Weir is secured to the flashing clamp of the roof drain. The Accutrol Weir is available with 1 to 4 slots for the large sump drain and up to 3 slots for the small sump drain.

For Large Sump Roof Drains Specify the "-A" option and number of slots required. (ie. "RD-100-A2" for two slot weir)
For Small Sump Roof Drains Specify the "-A" option and number of slots required. (ie. "RD-200-A1" for one slot weir)

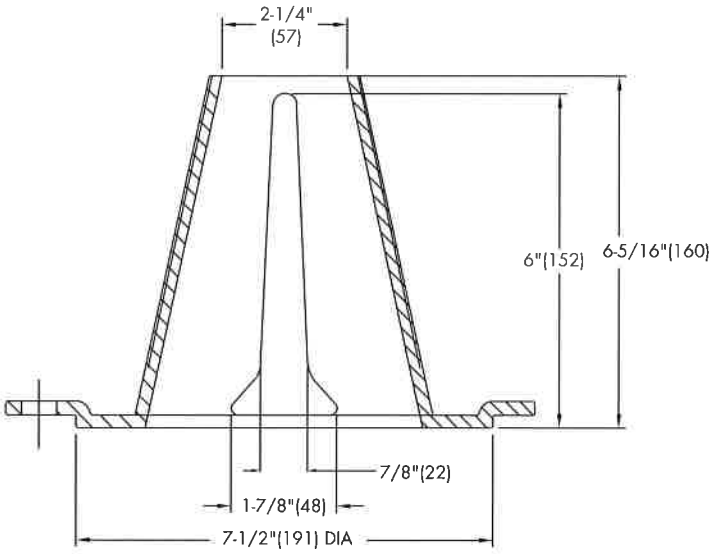

LARGE SUMP ACCUTROL WEIR

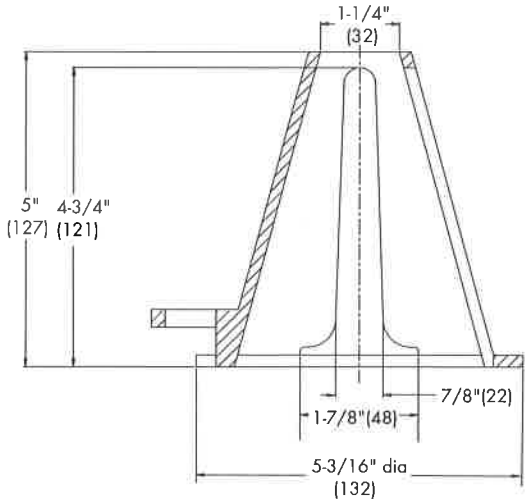

SMALL SUMP ACCUTROL WEIR

Job Name _____ **Model No.** _____

Job Location _____ Contractor _____

Engineer _____ Representative _____

WATTS®

WATTS Drainage reserves the right to modify or change product design or construction without prior notice and without incurring any obligation to make similar changes and modifications to products previously or subsequently sold. See your WATTS Drainage representative for any clarification. Dimensions are subject to manufacturing tolerances.

CANADA

Specification Drainage Products

CANADA: 5435 North Service Road, Burlington, ON, L7L 5H7 TEL: 905-332-6718 TOLL-FREE: 1-888-208-8927 Website: www.wattscanada.ca

LRL Associates Ltd.
Storm Watershed Summary

LRL File No.	220224
Project:	CIV 7-Storey Condo Building
Location:	424 Churchill Avenue
Date:	October 11, 2022
Designed:	Tamara Harb
Drawing Reference:	C701/C702

Pre-Development Catchments

WATERSHED	C = 0.2	C=0.7	C = 0.90	Total Area (m^2)	Total Area (ha)	Combined C
EWS-01	119.4	0.0	893.0	1012.4	0.101	0.82
TOTAL	**119.4**	**0.0**	**893.0**	**1012.4**	**0.101**	**0.82**

Post-Development Catchments

WATERSHED	C = 0.20	C = 0.70	C = 0.90	Total Area (m^2)	Total Area (ha)	Combined C
WS-01(ROOF)	0.00	0.00	116.29	116.29	0.012	0.90
WS-02 (ROOF)	0.00	0.00	141.44	141.44	0.014	0.90
WS-03 (ROOF)	0.00	0.00	248.09	248.09	0.025	0.90
WS-04 (ROOF)	0.00	0.00	62.07	62.07	0.006	0.90
WS-05 (ROOF)	0.00	0.00	130.54	130.54	0.013	0.90
WS-06(UN-CONTROLLED)	0.00	0.00	313.97	313.97	0.031	0.90
TOTAL	**0.0**	**0.0**	**1012.4**	**1012.4**	**0.101**	**0.90**

LRL File No. 220224
Project: CIV 7-Storey Condo Building
Location: 424 Churchilll Ave
Date: October 11, 2022
Designed: Tamara Harb
Drawing Ref.: C601

Stormwater Management Design Sheet

Runoff Equation

Q = 2.78CIA (L/s)
C = Runoff coefficient
I = Rainfall intensity (mm/hr) = $A / (Td + C)^B$
A = Area (ha)
T_c = Time of concentration (min)

Pre-development Stormwater Management - 2 Year Storm

2 year storm

$I2 = 732.95 / (Td + 6.199)^{0.81}$ **a = 732.951** **b = 0.810** **C = 6.199**

C =	0.50	max of 0.5 as per City of Ottawa
I =	76.8	mm/hr
Tc =	10	min
Total Area =	0.101	ha

Allowable Release Rate= **10.81** L/s

Post-development Stormwater Management

					$\sum R_{2\&5}$	$\sum R_{100}$
	Total Site Area =	**0.070**	ha	**∑R=**		
Controlled	WS-01(ROOF)	0.012	ha	R=	0.90	1.00
	WS-02 (ROOF)	0.014	ha	R=	0.90	1.00
	WS-03 (ROOF)	0.025	ha	R=	0.90	1.00
	WS-04 (ROOF)	0.006	ha	R=	0.90	1.00
	WS-05 (ROOF)	0.013	ha	R=	0.90	1.00
	Total Controlled	**0.070**	**ha**	**∑R=**	**0.90**	**1.00**
Un-controlled	WS-06 (UNCONTROLLED)	0.031	ha	R=	0.90	1.00
	Total Un-Controlled =	**0.031**	**ha**	**∑R=**	**0.90**	**1.00**

Post-development Stormwater Management (Uncontrolled Catchment WS-06)

100 Year Storm Event:

$I_{100} = 1735.688 / (Td + 6.014)^{0.820}$ **a = 1735.688** **b = 0.820** **C = 6.014**

Time (min)	Intensity (mm/hr)	Uncontrolled Runoff (L/s)	Controlled Release Rate Constant (L/s)	Total Release Rate (L/s)
10	178.6	15.59	0.00	15.59

LRL File No. 220224
Project: CIV 7-Storey Condo Building
Location: 424 Churchilll Ave
Date: October 11, 2022
Designed: Tamara Harb
Drawing Ref.: C601

Stormwater Management Design Sheet

Post-development Stormwater Management (WS-01 ROOF)

100 Year Storm Event:

$I_{100} = 1735.688 / (Td + 6.014)^{0.820}$ a = 1735.688 b = 0.820 C = 6.014

		Storage Required				
Time (min)	Intensity (mm/hr)	Controlled Runoff (L/s)	Storage Volume (m^3)	Controlled Release Rate Constant (L/s)	Uncontrolled Runoff (L/s)	Total Release Rate (L/s)
10	178.6	5.77	2.71	1.26	0.00	1.26
15	142.9	4.62	3.02	1.26	0.00	1.26
20	120.0	3.88	3.14	1.26	0.00	1.26
25	103.8	3.36	3.15	1.26	0.00	1.26
30	91.9	2.97	3.08	1.26	0.00	1.26
35	82.6	2.67	2.96	1.26	0.00	1.26
40	75.1	2.43	2.81	1.26	0.00	1.26
45	69.1	2.23	2.63	1.26	0.00	1.26
50	64.0	2.07	2.42	1.26	0.00	1.26
60	55.9	1.81	1.97	1.26	0.00	1.26
70	49.8	1.61	1.47	1.26	0.00	1.26
80	45.0	1.45	0.93	1.26	0.00	1.26
90	41.1	1.33	0.37	1.26	0.00	1.26
100	37.9	1.23	0.00	1.26	0.00	1.26
110	35.2	1.14	0.00	1.26	0.00	1.26
120	32.9	1.06	0.00	1.26	0.00	1.26

Summary of Roof Storage

Maximum Required Roof Storage (100 Year) =	3.15	m^3	
Proposed Head =	150	mm	*An Emergency overflow scupper is provided above this height.
Control Flow/Drain =	0.63	L/s	
Number of Roof Drains =	**2**		
Total Flow from Roof Drain =	1.26	L/s	
Available Roof Surface =	116.28	m^2	
Roof Drain Model =	*WATTS adjustable roof drain w/ weir opening-closed*		
Total Storage Required =	**3.15**	**m^3**	
Available Roof Storage =	**6.03**	**m^3**	refer to LRL Plan C601

Post-development Stormwater Management (WS-02 ROOF)

100 Year Storm Event:

$I_{100} = 1735.688 / (Td + 6.014)^{0.820}$ a = 1735.688 b = 0.820 C = 6.014

		Storage Required				
Time (min)	Intensity (mm/hr)	Controlled Runoff (L/s)	Storage Volume (m^3)	Controlled Release Rate Constant (L/s)	Uncontrolled Runoff (L/s)	Total Release Rate (L/s)
10	178.6	7.02	3.46	1.26	0.00	1.26
15	142.9	4.62	3.02	1.26	0.00	1.26
20	120.0	3.88	3.14	1.26	0.00	1.26
25	103.8	3.36	3.15	1.26	0.00	1.26
30	91.9	2.97	3.08	1.26	0.00	1.26
35	82.6	2.67	2.96	1.26	0.00	1.26
40	75.1	2.43	2.81	1.26	0.00	1.26
45	69.1	2.23	2.63	1.26	0.00	1.26
50	64.0	2.07	2.42	1.26	0.00	1.26
60	55.9	1.81	1.97	1.26	0.00	1.26
70	49.8	1.61	1.47	1.26	0.00	1.26
80	45.0	1.45	0.93	1.26	0.00	1.26
90	41.1	1.33	0.37	1.26	0.00	1.26
100	37.9	1.23	0.00	1.26	0.00	1.26
110	35.2	1.14	0.00	1.26	0.00	1.26
120	32.9	1.06	0.00	1.26	0.00	1.26

Summary of Roof Storage

Maximum Required Roof Storage (100 Year) =	3.46	m^3	
Proposed Head =	150	mm	*An Emergency overflow scupper is provided above this height.
Control Flow/Drain =	0.63	L/s	
Number of Roof Drains =	**2**		
Total Flow from Roof Drain =	1.26	L/s	
Available Roof Surface =	141	m^2	
Roof Drain Model =	*WATTS adjustable roof drain w/ weir opening-closed*		
Total Storage Required =	**3.46**	**m^3**	
Available Roof Storage =	**4.55**	**m^3**	refer to LRL Plan C601

Post-development Stormwater Management (WS-03 ROOF)

LRL File No. 220224
Project: CIV 7-Storey Condo Building
Location: 424 Churchilll Ave
Date: October 11, 2022
Designed: Tamara Harb
Drawing Ref.: C601

Stormwater Management Design Sheet

100 Year Storm Event:

$I_{100} = 1735.688 / (Td + 6.014)^{0.820}$ a = 1735.688 b = 0.820 C = 6.014

		Storage Required				
Time (min)	Intensity (mm/hr)	Controlled Runoff (L/s)	Storage Volume (m^3)	Controlled Release Rate Constant (L/s)	Uncontrolled Runoff (L/s)	Total Release Rate (L/s)
10	178.6	12.32	6.63	1.26	0.00	1.26
15	142.9	4.62	3.02	1.26	0.00	1.26
20	120.0	3.88	3.14	1.26	0.00	1.26
25	103.8	3.36	3.15	1.26	0.00	1.26
30	91.9	2.97	3.08	1.26	0.00	1.26
35	82.6	2.67	2.96	1.26	0.00	1.26
40	75.1	2.43	2.81	1.26	0.00	1.26
45	69.1	2.23	2.63	1.26	0.00	1.26
50	64.0	2.07	2.42	1.26	0.00	1.26
60	55.9	1.81	1.97	1.26	0.00	1.26
70	49.8	1.61	1.47	1.26	0.00	1.26
80	45.0	1.45	0.93	1.26	0.00	1.26
90	41.1	1.33	0.37	1.26	0.00	1.26
100	37.9	1.23	0.00	1.26	0.00	1.26
110	35.2	1.14	0.00	1.26	0.00	1.26
120	32.9	1.06	0.00	1.26	0.00	1.26

Summary of Roof Storage

Maximum Required Roof Storage (100 Year) =	6.63	m^3	
Proposed Head =	150	mm	*An Emergency overflow scupper is provided above this height.
Control Flow/Drain =	0.63	L/s	
Number of Roof Drains =	2		
Total Flow from Roof Drain =	1.26	L/s	
Available Roof Surface =	248	m^2	
Roof Drain Model =	*WATTS adjustable roof drain w/ weir opening-closed*		
Total Storage Required =	**6.63**	**m^3**	
Available Roof Storage =	**12.25**	**m^3**	refer to LRL Plan C601

Post-development Stormwater Management (WS-04 ROOF)

100 Year Storm Event:

$I_{100} = 1735.688 / (Td + 6.014)^{0.820}$ a = 1735.688 b = 0.820 C = 6.014

		Storage Required				
Time (min)	Intensity (mm/hr)	Controlled Runoff (L/s)	Storage Volume (m^3)	Controlled Release Rate Constant (L/s)	Uncontrolled Runoff (L/s)	Total Release Rate (L/s)
10	178.6	3.08	1.09	1.26	0.00	1.26
15	142.9	4.62	3.02	1.26	0.00	1.26
20	120.0	3.88	3.14	1.26	0.00	1.26
25	103.8	3.36	3.15	1.26	0.00	1.26
30	91.9	2.97	3.08	1.26	0.00	1.26
35	82.6	2.67	2.96	1.26	0.00	1.26
40	75.1	2.43	2.81	1.26	0.00	1.26
45	69.1	2.23	2.63	1.26	0.00	1.26
50	64.0	2.07	2.42	1.26	0.00	1.26
60	55.9	1.81	1.97	1.26	0.00	1.26
70	49.8	1.61	1.47	1.26	0.00	1.26
80	45.0	1.45	0.93	1.26	0.00	1.26
90	41.1	1.33	0.37	1.26	0.00	1.26
100	37.9	1.23	0.00	1.26	0.00	1.26
110	35.2	1.14	0.00	1.26	0.00	1.26
120	32.9	1.06	0.00	1.26	0.00	1.26

Summary of Roof Storage

Maximum Required Roof Storage (100 Year) =	3.15	m^3	
Proposed Head =	150	mm	*An Emergency overflow scupper is provided above this height.
Control Flow/Drain =	0.63	L/s	
Number of Roof Drains =	2		
Total Flow from Roof Drain =	1.26	L/s	
Available Roof Surface =	62.07	m^2	
Roof Drain Model =	*WATTS adjustable roof drain w/ weir opening-closed*		
Total Storage Required =	**3.15**	**m^3**	
Available Roof Storage =	**6.64**	**m^3**	refer to LRL Plan C601

Post-development Stormwater Management (WS-05 ROOF)

LRL File No. 220224
Project: CIV 7-Storey Condo Building
Location: 424 Churchilll Ave
Date: October 11, 2022
Designed: Tamara Harb
Drawing Ref.: C601

Stormwater Management Design Sheet

100 Year Storm Event:

$I_{100} = 1735.688 / (Td + 6.014)^{0.820}$ **a = 1735.688** **b = 0.820** **C = 6.014**

		Storage Required				
Time (min)	Intensity (mm/hr)	Controlled Runoff (L/s)	Storage Volume (m^3)	Controlled Release Rate Constant (L/s)	Uncontrolled Runoff (L/s)	Total Release Rate (L/s)
10	178.6	6.48	3.13	1.26	0.00	1.26
15	142.9	4.62	3.02	1.26	0.00	1.26
20	120.0	3.88	3.14	1.26	0.00	1.26
25	103.8	3.36	3.15	1.26	0.00	1.26
30	91.9	2.97	3.08	1.26	0.00	1.26
35	82.6	2.67	2.96	1.26	0.00	1.26
40	75.1	2.43	2.81	1.26	0.00	1.26
45	69.1	2.23	2.63	1.26	0.00	1.26
50	64.0	2.07	2.42	1.26	0.00	1.26
60	55.9	1.81	1.97	1.26	0.00	1.26
70	49.8	1.61	1.47	1.26	0.00	1.26
80	45.0	1.45	0.93	1.26	0.00	1.26
90	41.1	1.33	0.37	1.26	0.00	1.26
100	37.9	1.23	0.00	1.26	0.00	1.26
110	35.2	1.14	0.00	1.26	0.00	1.26
120	32.9	1.06	0.00	1.26	0.00	1.26

Summary of Roof Storage

Maximum Required Roof Storage (100 Year) =	3.15	m^3	
Proposed Head =	150	mm	*An Emergency overflow scupper is provided above this height.
Control Flow/Drain =	0.63	L/s	
Number of Roof Drains =	**2**		
Total Flow from Roof Drain =	1.26	L/s	
Available Roof Surface =	131	m^2	
Roof Drain Model =	*WATTS adjustable roof drain w/ weir opening-closed*		
Total Storage Required =	**3.15**	**m^3**	
Available Roof Storage =	**3.16**	**m^3**	refer to LRL Plan C.601

SUMMARY OF RELEASE RATES AND STORAGE VOLUMES				
CATCHMENT AREAS	DRAINAGE AREAS (ha)	100-YEAR RELEASE RATE	100-YEAR REQUIRED STORAGE (m3)	TOTAL AVAILABLE STORAGE (m3)
WS-01(ROOF)	0.012	1.26	3.15	6.03
WS-02 (ROOF)	0.014	1.26	3.46	4.55
WS-03 (ROOF)	0.025	1.26	6.63	12.25
WS-04 (ROOF)	0.006	1.26	3.15	3.16
WS-05 (ROOF)	0.013	1.26	3.15	6.64
TOTAL CONTROLLED	**0.070**	**6.30**	**19.53**	**32.63**
WS-06 (UNCONTROLLED)	0.031	15.59	0	0
TOTAL UNCONTROLLED	**0.031**	**15.59**	**0.00**	**0.00**
TOTAL	**0.101**	**21.89**	**19.53**	**32.63**

LRL Associates Ltd.

Storm Design Sheet

LRL File No.	220224
Project:	CIV 7-Storey Condo Building
Location:	424 Churchill Avenue
Date:	October 11, 2022
Designed:	Tamara Harb
Drawing Reference:	C.401

Storm Design Parameters

Rational Method Q = 2.78CIA

Q = Peak flow in litres per second (L/s)
A = Drainage area in hectares (ha)
C = Runoff coefficient
I = Rainfall intensity (mm/hr)

Runoff Coefficient (C)

Grass	0.20
Gravel	0.70
Asphalt / rooftop	0.90

Ottawa Macdonald-Cartier International Airport IDF curve equation (10 year event, intensity in mm/hr)

I100 = 1735.688 / (Td + 6.014)0.820

Min. velocity = 0.80 m/s
Manning's "n" = 0.013

LOCATION			AREA (ha)			FLOW						STORM SEWER							
WATERSHED / STREET	From MH	To MH	C = 0.20	C = 0.70	C = 0.90	Indiv. 2.78AC	Accum. 2.78AC	Time of Conc. (min.)	Rainfall Intensity (mm/hr)	Peak Flow Q (L/s)	Controlled Flow Q (L/s)	Pipe Diameter (mm)	Type	Slope (%)	Length (m)	Capacity Full (L/s)	Velocity Full (m/s)	Time of Flow (min.)	Ratio (Q/Q_{FULL})
WS-01 to WS-05	Building	PROP STM MH01	0.000	0.000	0.070	0.175	0.175	10.00	178.6	31.28	6.30	250	PVC	2.00%	11.6	84.1	1.71	0.11	0.37

APPENDIX E

Civil Engineering Drawings

PROPOSED 7 STOREY CONDO REDEVELOPMENT
424 CHURCHILL AVE, OTTAWA ON

REVISION 1

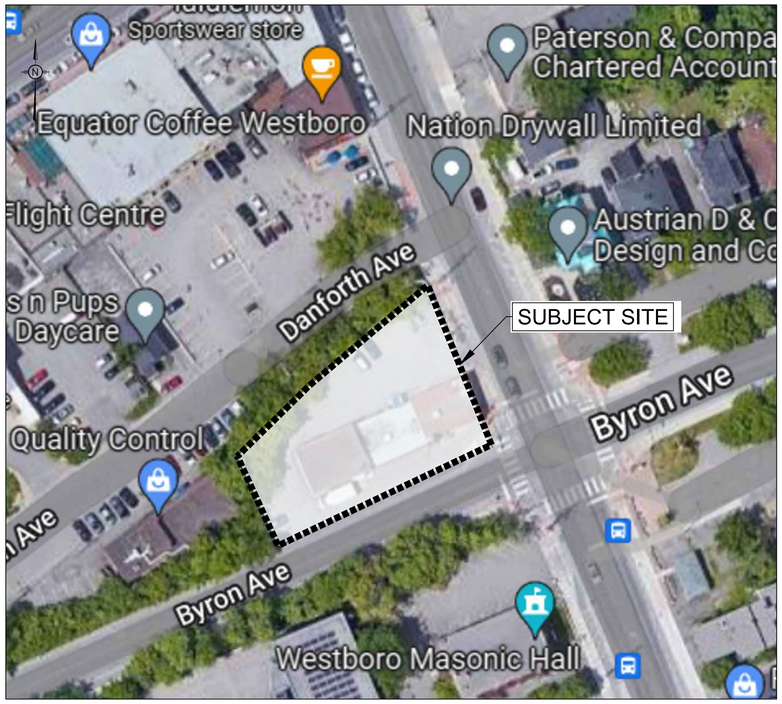

KEY PLAN (N.T.S.)

DRAWING INDEX	
TITLE PAGE	
SEDIMENT AND EROSION CONTROL PLAN	C101
DEMOLITION PLAN	C102
GRADING AND DRAINAGE PLAN	C301
SERVICING PLAN	C401
STORMWATER MANAGEMENT PLAN	C601
PRE-DEVELOPMENT WATERSHED PLAN	C701
POST-DEVELOPMENT WATERSHED PLAN	C702
CONSTRUCTION DETAIL PLAN	C901

LRL

ENGINEERING | INGÉNIERIE

5430 Canotek Road | Ottawa, ON, K1J 9G2
www.lrl.ca | (613) 842-3434

PROPOSED 7 STOREY CONDO REDEVELOPMENT
424 CHURCHILL AVE, OTTAWA ON
ISSUED FOR APPROVAL - 11 OCT 2022
LRL PROJECT no: 220224

LICENSED PROFESSIONAL ENGINEER
M. BASNET
100501996
2022/10/11
PROVINCE OF ONTARIO
NOT AUTHENTIC UNLESS SIGNED AND DATED

GENERAL NOTES

1. ALL WORKS MATERIALS SHALL CONFIRM TO THE LAST REVISION OF THE STANDARDS AND SPECIFICATIONS FOR THE CITY OF OTTAWA, ONTARIO PROVINCIAL STANDARD DRAWINGS (OPSD) AND SPECIFICATIONS (OPSS), WHERE APPLICABLE. LOCAL UTILITY STANDARDS AND MINISTRY OF TRANSPORTATION STANDARDS WILL APPLY WHERE REQUIRED.
2. THE CONTRACTORS SHALL CONFIRM THE LOCATION OF ALL EXISTING UTILITIES WITHIN THE SITE AND ADJACENT WORK AREAS. THE CONTRACTORS SHALL BE RESPONSIBLE FOR PROTECTING ALL EXISTING UTILITIES TO THE SATISFACTION OF THE AUTHORITY HAVING JURISDICTION. THE CONTRACTOR SHALL BE RESPONSIBLE FOR THE REPAIR OR REPLACEMENT OF ANY SERVICES OR UTILITIES DISTURBED DURING CONSTRUCTION , TO THE SATISFACTION OF THE AUTHORITY HAVING JURISDICTION.
3. ALL DIMENSIONS SHALL BE CHECKED AND VERIFIED IN THE FIELD BY THE CONTRACTOR PRIOR TO THE START OF CONSTRUCTION, ANY DISCREPANCIES SHALL BE REPORTED IMMEDIATELY TO THE ENGINEER. LOST TIME DUE TO FAILURE OF THE CONTRACTORS TO CONFIRM UTILITY LOCATIONS AND NOTIFY ENGINEER OF POSSIBLE CONFLICTS PRIOR TO CONSTRUCTION WILL BE AT CONTRACTORS EXPENSE.
4. ANY AREA BEYOND THE LIMIT OF THE SITE DISTURBED DURING CONSTRUCTION SHALL BE RESTORED TO ORIGINAL CONDITION OR BETTER TO THE SATISFACTION OF THE AUTHORITY HAVING JURISDICTION AT THE CONTRACTOR'S EXPENSE. RELOCATING OF EXISTING SERVICES AND/OR UTILITIES SHALL BE AS SHOWN ON THE DRAWINGS OR DETECTED BY THE ENGINEER AT THE EXPENSE OF DEVELOPERS.
5. ALL WORK SHALL BE COMPLETED IN ACCORDANCE WITH THE 'OCCUPATIONAL HEALTH AND SAFETY ACT AND REGULATIONS FOR CONSTRUCTION PROJECTS'. THE GENERAL CONTRACTORS SHALL BE DEEMED TO BE THE 'CONTRACTOR' AS DEFINED IN THE ACT.
6. ALL THE CONSTRUCTION SIGNAGE MUST CONFIRM TO THE MINISTRY OF TRANSPORTATION OF ONTARIO MANUAL OF UNIFORM TRAFFIC CONTROL DEVICES PER LATEST AMENDMENT.
7. THE CONTRACTOR IS ADVISED THAT WORKS BY OTHERS MAY BE ONGOING DURING THE PERIOD OF THE CONTRACT. THE CONTRACTOR SHALL COORDINATE CONSTRUCTION ACTIVITIES TO PREVENT CONFLICTS.
8. ALL DIMENSIONS ARE IN METRES UNLESS SPECIFIED OTHERWISE.
9. THERE WILL BE NO SUBSTITUTION OF MATERIALS UNLESS PRIOR WRITTEN APPROVAL IS RECEIVED FROM THE ENGINEER.
10. ALL CONSTRUCTION SHALL BE CARRIED OUT IN ACCORDANCE WITH THE RECOMMENDATIONS MADE IN THE GEOTECHNICAL REPORT.
11. FOR DETAILS RELATING TO STORMWATER MANAGEMENT AND ROOF DRAINAGE REFER TO THE SITE SERVICING AND STORMWATER MANAGEMENT REPORT.
12. ALL SEWERS CONSTRUCTED WITH GRADES LESS THAN 1.0% SHALL BE INSTALLED USING LASER ALIGNMENT AND CHECKED WITH LEVEL INSTRUMENT PRIOR TO BACKFILLING.
13. THE CONTRACTOR IS RESPONSIBLE FOR OBTAINING ALL PERMITS REQUIRED AND TO BEAR THE COST OF THE SAME.
14. THE CONTRACTOR SHALL BE RESPONSIBLE FOR ADDITIONAL BEDDING, OR ADDITIONAL STRENGTH PIPE IF THE MAXIMUM TRENCH WIDTH AS SPECIFIED BY OPSD IS EXCEEDED.
15. ALL PIPE/CULVERT SECTION SIZES REFER TO INSIDE DIMENSIONS.
16. SHOULD DEEPLY BURIED ARCHAEOLOGICAL REMAINS BE FOUND ON THE PROPERTY DURING CONSTRUCTION ACTIVITIES, THE HERITAGE OPERATIONS UNIT OF THE ONTARIO MINISTRY OF CULTURE MUST BE NOTIFIED IMMEDIATELY.
17. ALL NECESSARY CLEARING AND GRUBBING SHALL BE COMPLETED BY THE CONTRACTOR. REVIEW WITH CONTRACT ADMINISTRATOR AND THE CITY OF OTTAWA PRIOR TO ANY TREE CUTTING/REMOVAL.
18. DRAWINGS SHALL BE READ ON CONJUNCTION WITH ARCHITECTURAL SITE PLAN.
19. THE CONTRACTOR SHALL PROVIDE THE PROJECT ENGINEER ON SET OF AS CONSTRUCTED SITE SERVICING AND GRADING DRAWINGS.
20. BENCHMARKS: IT IS THE RESPONSIBILITY OF THE CONTRACTOR TO VERIFY THAT THE SITE BENCHMARK(S) HAS NOT BEEN ALTERED OR DISTURBED AND THAT ITS RELATIVE ELEVATION AND DESCRIPTION AGREES WITH THE INFORMATION DEPICTED ON THIS PLAN.

EROSION AND SEDIMENT CONTROL NOTES

GENERAL

THE CONTRACTOR SHALL IMPLEMENT BEST MANAGEMENT PRACTICES, TO PROVIDE FOR PROTECTION OF THE AREA DRAINAGE SYSTEM AND THE RECEIVING WATERCOURSE, DURING CONSTRUCTION ACTIVITIES. THE CONTRACTOR ACKNOWLEDGES THAT FAILURE TO IMPLEMENT APPROPRIATE EROSION AND SEDIMENT CONTROL MEASURES MAY BE SUBJECT TO PENALTIES IMPOSED BY ANY APPLICABLE REGULATORY AGENCY.

THE CONTRACTOR ACKNOWLEDGES THAT SURFACE EROSION AND SEDIMENT RUNOFF RESULTING FROM THEIR CONSTRUCTION OPERATIONS HAS POTENTIAL TO CAUSE A DETRIMENTAL IMPACT TO ANY DOWNSTREAM WATERCOURSE OR SEWER, AND THAT ALL CONSTRUCTION OPERATIONS THAT MAY IMPACT UPON WATER QUALITY SHALL BE CARRIED OUT IN MANNER THAT STRICTLY MEETS THE REQUIREMENT OF ALL APPLICABLE LEGISLATION AND REGULATIONS.

AS SUCH, THE CONTRACTOR SHALL BE RESPONSIBLE FOR CARRYING OUT THEIR OPERATIONS, AND SUPPLYING AND INSTALLING ANY APPROPRIATE CONTROL MEASURES, SO AS TO PREVENT SEDIMENT LADEN RUNOFF ENTERING ANY SEWER OR WATERCOURSE WITHIN OR DOWNSTREAM OF THE WORKING AREA.

THE CONTRACTOR ACKNOWLEDGES THAT NO ONE MEASURE IS LIKELY TO BE 100% EFFECTIVELY FOR EROSION PROTECTION AND CONTROLLING SEDIMENT RUNOFF AND DISCHARGES FROM THE SITE. THEREFORE, WHERE NECESSARY THE CONTRACTOR SHALL IMPLEMENT ADDITIONAL MEASURES ARRANGED IN SUCH MANNER AS TO MITIGATE SEDIMENT RELEASE FROM THE CONSTRUCTION OPERATIONS AND ACHIEVE SPECIFIC MAXIMUM PERMITTED CRITERIA WHERE APPLICABLE. SUGGESTED ON-SITE MEASURES MAY INCLUDE, BUT SHALL NOT BE LIMITED TO, THE FOLLOWING METHODS: SEDIMENT PONDS, FILTER BAGS, PUMP FILTERS, SETTLING TANKS, SILT FENCE, STRAW BALES, FILTER CLOTHS, CATCH BASIN FILTERS, CHECK DAMS AND/OR OTHER RECOGNIZED TECHNOLOGIES AND METHOD AVAILABLE AT THE TIME OF CONSTRUCTION. SPECIFIC MEASURES SHALL BE INSTALLED IN ACCORDANCE WITH REQUIREMENTS OF OPSS 577 WHERE APPROPRIATE, OR IN ACCORDANCE WITH MANUFACTURER'S RECOMMENDATIONS.

WHERE, IN THE OPINION OF THE CONTRACT ADMINISTRATOR OR REGULATORY AGENCY, THE INSTALLED CONTROL MEASURES FAIL TO PERFORM ADEQUATELY, THE CONTRACTOR SHALL SUPPLY AND INSTALL ADDITIONAL OR ALTERNATIVE MEASURES AS DIRECTED BY THE CONTRACT ADMINISTRATOR OR REGULATORY AGENCY, AS SUCH, THE CONTRACTOR SHALL HAVE ADDITIONAL CONTROL MATERIALS ON SITE AT ALL TIME WHICH ARE EASILY ACCESSIBLE AND MAY BE IMPLEMENTED BY HIM AT THE MOMENT'S NOTICE.

PRIOR TO COMMENCING WORK, THE CONTRACTOR SHALL SUBMIT TO THE CONTRACT ADMINISTRATOR SIX COPIES OF A DETAILED EROSION AND SEDIMENT CONTROL PLAN (ESCP). THE ESCP WILL CONSIST OF WRITTEN DESCRIPTION AND DETAILED DRAWINGS INDICATING THE ON-SITE ACTIVITIES AND MEASURES TO BE USED TO CONTROL EROSION AND SEDIMENT MOVEMENT FOR EACH STEP OF THE WORK.

CONTRACTOR'S RESPONSIBILITIES

THE CONTRACTOR SHALL ENSURE THAT ALL WORKERS, INCLUDING SUB-CONTRACTOR, IN THE WORKING ARE ARE AWARE OF THE IMPORTANCE OF THE EROSION AND SEDIMENT CONTROL MEASURES AND INFORMED OF THE CONSEQUENCES OF THE FAILURE TO COMPLY WITH THE REQUIREMENTS OF ALL REGULATORY AGENCIES.

THE CONTRACTOR SHALL PERIODICALLY, AND WHEN REQUESTED BY THE CONTRACT ADMINISTRATOR, CLEAN OUT ACCUMULATED SEDIMENT DEPOSITS AS REQUIRED AT THE SEDIMENT CONTROL DEVICES, INCLUDING THOSE DEPOSITS THAT MAY ORIGINATE FROM OUTSIDE THE CONSTRUCTION AREA. ACCUMULATED SEDIMENT SHALL BE REMOVED IN SUCH A MANNER THAT PREVENTS THE DEPOSITION OF THIS MATERIAL INTO THE SEWER WATERCOURSE AND AVOIDS DAMAGE TO CONTROL MEASURES. THE SEDIMENT SHALL BE REMOVED FROM THE SITE AT THE CONTRACTOR'S EXPENSE AND MANAGED IN COMPLIANCE WITH REQUIREMENTS FRO EXCESS EARTH MATERIAL, AS SPECIFIED ELSEWHERE IN THE CONTRACT.

THE CONTRACTOR SHALL IMMEDIATELY REPORT TO THE CONTRACT ADMINISTRATOR ANY ACCIDENTAL DISCHARGES OF SEDIMENT MATERIAL INTO EITHER THE WATERCOURSE OR THE STORM SEWER SYSTEM. FAILURE TO REPORT WILL BE CONSTITUTE A BRACH OF THIS SPECIFICATION AND THE CONTRACTOR MAY ALSO BE SUBJECT TO THE PENALTIES IMPOSED BY THE APPLICABLE REGULATORY AGENCY. APPROPRIATE RESPONSE MEASURES, INCLUDING ANY REPAIRS TO EXISTING CONTROL MEASURES OR THE IMPLEMENTATION OF ADDITIONAL CONTROL MEASURES, SHALL BE CARRIED OUT BY THE CONTRACTOR WITHOUT DELAY.

THE SEDIMENT CONTROL MEASURES SHALL ONLY BE REMOVED WHEN, IN THE OPINION OF THE CONTRACT ADMINISTRATOR, THE MEASURE OR MEASURES, IS NO LONGER REQUIRED. NO CONTROL MEASURE MAY BE PERMANENTLY REMOVED WITHOUT PRIOR AUTHORIZATION FROM THE CONTRACT ADMINISTRATOR. ALL SEDIMENT AND EROSION CONTROL MEASURES SHALL BE REMOVED IN A MANNER THAT AVOIDS THE ENTRY OF ANY EQUIPMENT, OTHER THAN HAND-HELD EQUIPMENT, INTO ANY WATERCOURSE, AND PREVENTS THE RELEASE OF ANY SEDIMENT OR DEBRIS INTO ANY SEWER OR WATERCOURSE WITHIN OR DOWNSTREAM OF THE WORKING AREA. ALL ACCUMULATED SEDIMENT SHALL BE REMOVED FROM THE WORKING AREA AT THE CONTRACTOR'S EXPENSE AND MANAGED IN COMPLIANCE WITH THE REQUIREMENTS FOR EXCESS EARTH MATERIAL

WHERE, IN THE OPINION OF EITHER THE CONTRACT ADMINISTRATOR OR A REGULATORY AGENCY, ANY OF THE TERMS SPECIFIED HEREIN HAVE NOT BEEN COMPLIED WITH OR PERFORMED IN A SUITABLE MANNER, OR TAT ALL, THE CONTRACTOR ADMINISTRATOR OR A REGULATORY AGENCY HAS THE RIGHT TO IMMEDIATELY WITHDRAW ITS PERMISSION TO CONTINUE THE WORK BUT MAY RENEW ITS PERMISSION UPON BEING SATISFIED THAT THE DEFAULTS OR DEFICIENCIES IN THE PERFORMANCE OF THIS SPECIFICATION BY THE CONTRACTOR HAVE BEEN REMEDIED.

SPILL CONTROL NOTES

1. ALL CONSTRUCTION EQUIPMENT SHALL BE RE-FUELED, MAINTAINED, AND STORED NO LESS THAN 30 METRES FROM WATERCOURSE, STEAMS, CREEKS, WOODLOTS, AND ANY ENVIRONMENTALLY SENSITIVE AREAS, OR AS OTHERWISE SPECIFIED.
2. THE CONTRACTOR MUST IMPLEMENT ALL NECESSARY MEASURES IN ORDER TO PREVENT LEAKS, DISCHARGES OR SPILLS OF POLLUTANTS, DELETERIOUS MATERIALS, OR OTHER SUCH MATERIALS OR SUBSTANCES WHICH WOULD OR COULD CAUSE AN ADVERSE IMPACT TO THE NATURAL ENVIRONMENT.
3. IN THE EVENT OF A LEAK, DISCHARGE OR SPILL OF POLLUTANT, DELETERIOUS MATERIAL OR OTHER SUCH MATERIAL OR SUBSTANCE WHICH WOULD OR COULD CAUSE AN ADVERSE IMPACT TO THE NATURAL ENVIRONMENT, THE CONTRACTOR SHALL:
   - 3.1. IMMEDIATELY NOTIFY APPROPRIATE FEDERAL, PROVINCIAL, AND LOCAL GOVERNMENT MINISTRIES, DEPARTMENTS, AGENCIES, AND AUTHORITIES OF THE INCIDENT IN ACCORDANCE WITH ALL CURRENT LAWS, LEGISLATION, ACTS, BY-LAWS, PERMITS, APPROVALS, ETC.
   - 3.2. TAKE IMMEDIATE MEASURES TO CONTAIN THE MATERIAL OR SUBSTANCE, AND TO TAKE SUCH MEASURES TO MITIGATE AGAINST ADVERSE IMPACTS TO THE NATURAL ENVIRONMENT.
   - 3.3. RESTORE THE AFFECTED AREA TO THE ORIGINAL CONDITION OR BETTER TO THE SATISFACTION OF THE AUTHORITIES HAVING JURISDICTION.

MUD MAT NOTES

1. THE GRANULAR MATERIAL WILL REQUIRE PERIODIC REPLACEMENT AS IT BECOMES CONTAMINATED BY VEHICLE TRAFFIC.
2. SEDIMENT SHALL BE CLEANED FROM PUBLIC ROADS AT THE END OF EACH DAY.
3. SEDIMENT SHALL BE REMOVED FROM PUBLIC ROADS BY SHOVELING OR SWEEPING AND DISPOSED OR PROPERLY IN A CONTROLLED SEDIMENT DISPOSAL AREA.

SITE GRADING NOTES

1. PRIOR TO THE COMMENCEMENT OF THE SITE GRADING WORKS, ALL SILTATION CONTROL DEVICES SHALL BE INSTALLED AND OPERATIONAL PER EROSION CONTROL PLAN.
2. ALL GRANULAR AND PAVEMENT FOR ROADS/PARKING AREAS SHALL BE CONSTRUCTED IN ACCORDANCE WITH GEOTECHNICAL ENGINEER'S RECOMMENDATIONS.
3. ALL TOPSOIL AND ORGANIC MATERIAL SHALL BE STRIPPED WITHIN THE ROAD AND PARKING AREAS ALLOWANCE PRIOR TO THE COMMENCEMENT OF CONSTRUCTION.
4. CONCRETE CURB SHALL BE IN ACCORDANCE WITH THE CITY OF OTTAWA STD. SC1.1 PROVISION SHALL BE MADE OR CURB DEPRESSIONS AS INDICATED ON ARCHITECTURAL SITE PLAN. CONCRETE SIDEWALK SHALL BE IN ACCORDANCE WITH CITY OF OTTAWA STD SC1.4. ALL CURBS, CONCRETE ISLANDS, AND SIDEWALKS SHOWN O THIS DRAWING ARE TO BR PRICED IN SITE WORKS PORTION OF THE CONTRACT.
5. PAVEMENT REINSTATEMENT FOR SERVICE AND UTILITY CUTS SHALL BE IN ACCORDANCE WITH THE CITY OF OTTAWA STD. R10 AND OPSD 509.010 AND OPSS 310.
6. GRANULAR 'A' SHALL BE PLACED TO A MINIMUM THICKNESS OF 30MM AROUND ALL STRUCTURES WITHIN THE PAVEMENT AREA.
7. SUB-EXCAVATE SOFT AREAS AND FILL WITH GRANULAR 'B' COMPACTED IN MAXIMUM 30MM LIFTS.
8. ALL WORK ON THE MUNICIPAL RIGHT OF WAY AND EASEMENTS TO BE INSPECTED BY THE MUNICIPALITY PRIOR BACKFILLING.
9. CONTRACTOR TO OBTAIN A ROAD OCCUPANCY PERMIT 48 HOURS PRIOR TO COMMENCING ANY WORK WITHIN THE MUNICIPAL ROAD ALLOWANCE, IF REQUIRED BY THE MUNICIPALITY.
10. ALL PAVEMENT MARKING FEATURES AND SITE SIGNAGE SHALL BE PLACED PER ARCHITECTURAL SITE PLAN. LINE PAINTING AND DIRECTIONAL SYMBOLS SHALL BE APPLIED WITH A MINIMUM OF TWO COATS OF ORGANIC SOLVENT PAINT.
11. REFER TO ARCHITECTURAL SITE PLAN FOR DIMENSIONS AND SITE DETAILS.
12. STEP JOINTS ARE TO BE USED WHERE PROPOSED ASPHALT MEETS EXISTING ASPHALT. ALL JOINTS MUST BE SEALED.
13. SIDEWALKS TO BE 13MM & BEVELED AT 2:1 OR 6MM WITH NO BEVEL REQUIRED BELOW THE FINISHED FLOOR SLAB ELEVATION AT ENTRANCES REQUIRED TO BE BARRIER-FREE, UNLESS OTHERWISE NOTED. ALL IN ACCORDANCE WITH OBC 3.8.1.3 & OTTAWA ACCESSIBILITY DESIGN STANDARDS.
14. WHERE APPLICABLE THE CONTRACTOR IS TO SUBMIT SHOP DRAWINGS TO THE ENGINEER FOR APPROVAL PRIOR TO CONSTRUCTION. SHOP DRAWINGS MUST BE SITE SPECIFIC, SIGNED AND SEALED BY A LICENSED STRUCTURAL ENGINEER. THE CONTRACTOR WILL ALSO BE REQUIRED TO SUPPLY AND GEOTECHNICAL CERTIFICATION OF THE AS-CONSTRUCTED RETAINING WALL TO THE ENGINEER PRIOR TO FINAL ACCEPTANCE.

ROADWORK SPECIFICATIONS

15. ROADWORK TO BE COMPLETED IN ACCORDANCE WITH GEOTECHNICAL REPORT, PREPARED BY LRL ASSOCIATES. DATED NOVEMBER 2020.
16. AL TOPSOIL AND ORGANIC MATERIAL SHALL BE STRIPPED WITHIN THE ROAD ALLOWANCE PRIOR TO THE COMMENCEMENT OF CONSTRUCTION AND STOCK PILLED ON SITE AS DIRECTED BY NATIONAL MUNICIPALITY.
17. THE SUBGRADE SHALL BE CROWNED AND SLOPED AT LEAST 2% AND PROOF ROLLED WITH HEAVY ROLLERS.
18. SUB-EXCAVATE SOFT AREAS AND FILL WITH GRANULAR 'A', TYPE II COMPACTED IN MAXIMUM 300MM LIFTS.
19. ALL GRANULAR FOR ROADS SHALL BE COMPACTED TO MINIMUM OF 100% STANDARD PROCTOR DENSITY MAXIMUM DRY DENSITY (SPMDD).

SANITARY, FOUNDATION DRAIN, STORM SEWER AND WATERMAIN NOTES

GENERAL

1. LASER ALIGNMENT CONTROL TO BE UTILIZED ON ALL SEWER INSTALLATIONS.
2. CLAY SEALS TO BE INSTALLED AS PER CITY STANDARD DRAWING S8. THE SEALS SHOULD BE AT LEAST 1.5M LONG (IN THE TRENCH DIRECTION) AND SHOULD EXTEND FROM TRENCH WALL TO TRENCH WALL. THE SEALS SHOULD EXTEND FROM THE FROST LINE AND FULLY PENETRATE THE BEDDING, SUB-BEDDING, AND COVER MATERIAL. THE BARRIERS SHOULD CONSIST OF RELATIVELY DRY AND COMPATIBLE BROWN SILTY CLAY PLACED IN MAXIMUM 225MM LIFTS AND COMPACTED TO A MINIMUM OF 95% SPMDD. THE CLAY SEALS SHOULD BE PLACED AT THE SITE BOUNDARIES AND AT 60M INTERVALS IN THE SERVICE TRENCHES.
3. SERVICES TO BUILDING TO BE TERMINATED 1.0M FROM THE OUTSIDE FACE OF BUILDING UNLESS OTHERWISE NOTED.
4. ALL MAINTENANCE STRUCTURE AND CATCH BASIN EXCAVATIONS TO BE BACKFILLED WITH GRANULAR MATERIAL COMPACTED TO 98% STANDARD PROCTOR DENSITY. A MINIMUM OF 300MM AROUND STRUCTURES.
5. "MODULOC" OR APPROVED PRE-CAST MAINTENANCE STRUCTURE AND CATCH BASIN ADJUSTERS TO BE USED IN LIEU OF BRICKING. PARGE ADJUSTING UNITS ON THE OUTSIDE ONLY.
6. SAFETY PLATFORMS SHALL BE PER OPSD 404.02.
7. DROP STRUCTURES SHALL BE IN ACCORDANCE WITH OPSD 1003.01, IF APPLICABLE.
8. THE CONTRACTOR IS TO PROVIDE CCTV CAMERA INSPECTIONS OF ALL SEWERS, INCLUDING PICTORIAL REPORT, ONE (1) CD COPY AND TWO (2) VIDEO RECORDING IN A FORMAT ACCEPTABLE TO ENGINEER. ALL SEWER ARE TO BE FLUSHED PRIOR TO CAMERA INSPECTION. ASPHALT WEAR COURSE SHALL NOT BE PLACED UNTIL THE VIDEO INSPECTION OF SEWERS AND NECESSARY REPAIRS HAVE BEEN COMPLETED TO THE SATISFACTION OF THE ENGINEER.
9. CONTRACTOR SHALL PERFORM LEAKAGE TESTING, IN THE PRESENCE OF THE CONSULTANT, FOR SANITARY SEWERS IN ACCORDANCE WITH OPSS 407. CONTRACTOR SHALL PERFORM VIDEO INSPECTION OF ALL SEWERS. A COPY OF THE VIDEO AND INSPECTION REPORT SHALL BE SUBMITTED TO THE CONSULTANT FOR REVIEW AND APPROVAL PRIOR TO PLACEMENT OF WEAR COURSE ASPHALT.

SANITARY

10. ALL SANITARY SEWER INSTALLATION SHALL CONFORM TO THE LATEST REVISIONS OF THE CITY OF OTTAWA AND THE ONTARIO PROVINCIAL STANDARD DRAWINGS (OPSD). AND SPECIFICATIONS (OPSS).
11. ALL SANITARY GRAVITY SEWER SHALL BE PVC SDR 35, IPEX 'RING-TITE' (OR APPROVED EQUIVALENT) PER CSA STANDARD B182.2 OR LATEST AMENDMENT, UNLESS SPECIFIED OTHERWISE.
12. EXISTING MAINTENANCE STRUCTURES TO BE RE-BENCHED WHERE A NEW CONNECTION IS MADE.
13. SANITARY GRAVITY SEWER TRENCH AND BEDDING SHALL BE PER CITY OF OTTAWA STD. S6 AND S7 CLASS 'B' BEDDING, UNLESS SPECIFIED OTHERWISE.
14. SANITARY MAINTENANCE STRUCTURE FRAME AND COVERS SHALL BE PER CITY OF OTTAWA STD. S24 AND S25.
15. SANITARY MAINTENANCE STRUCTURES SHALL BE BENCHED PER OPSD 701.021.
16. 100MM THICK HIGH-DENSITY GRADE 'A' POLYSTYRENE INSULATION TO BE INSTALLED IN ACCORDANCE WITH CITY STD W22 WHERE INDICATED ON DRAWING SSP-1.

STORM

17. ALL REINFORCED CONCRETE STORM SEWER PIPE SHALL BE IN ACCORDANCE WITH CSA A257.2, OR LATEST AMENDMENT. ALL NON-REINFORCED CONCRETE STORM SEWER PIPE SHALL BE IN ACCORDANCE WITH CSA A257.1, OR LATEST AMENDMENT. PIPE SHALL BE JOINED WITH STD. RUBBER GASKETS AS PER CSA A257.3, OR LATEST AMENDMENT.
18. ALL STORM SEWER TRENCH AND BEDDING SHALL BE IN ACCORDANCE WITH THE CITY OF OTTAWA STD. S6 AND S7 CLASS 'B' UNLESS OTHERWISE SPECIFIED. BEDDING AND COVER MATERIAL SHALL BE SPECIFIED BY PROJECT GEOTECHNICAL ENGINEER.
19. ALL PVC STORM SEWERS ARE TO BE SDR 35 APPROVED PER C.S.A. B182.2 OR LATEST AMENDMENT, UNLESS OTHERWISE SPECIFIED.
20. CATCH BASIN SHALL BE IN ACCORDANCE WITH OPSD 705.010.
21. CATCH BASIN LEADS SHALL BE IN 200MM DIA. AT 1% SLOPE (MIN) UNLESS SPECIFIED OTHERWISE.
22. ALL CATCH BASINS SHALL HAVE 600MM SUMPS, UNLESS SPECIFIED OTHERWISE.
23. ALL CATCH BASIN LEAD INVERTS TO BE 1.5M BELOW FINISHED GRADE UNLESS SPECIFIED OTHERWISE.
24. THE STORM SEWER CLASSES HAVE BEEN DESIGNED BASED ON BEDDING CONDITIONS SPECIFIED ABOVE. WHERE THE SPECIFIED TRENCH WIDTH IS EXCEEDED , THE CONTRACTOR IS REQUIRED TO PROVIDE AND SHALL BE RESPONSIBLE FOR EXTRA TEMPORARY AND/OR PERMANENT REPAIRS MADE NECESSARY BY THE WIDENED TRENCH.
25. ALL ROAD AND PARKING LOT CATCH BASINS TO BE INSTALLED WITH ORTHOGONALLY PLACED SUBDRAINS IN ACCORDANCE WITH DETAIL. PERFORATED SUBDRAIN FOR ROAD AND PARKING LOT CATCH BASIN SHALL BE INSTALLED PER CITY STD R1 UNLESS OTHERWISE NOTED.
26. PERFORATED SUBDRAIN FOR REAR YARD AND LANDSCAPING APPLICATIONS SHALL BE INSTALLED PER CITY STD S29, S30 AND S31, WHERE APPLICABLE.
27. RIP-RAP TREATMENT SEWER AND CULVERT OUTLETS PER OPSD 810.010.
28. ALL STORM SEWER/ CULVERTS TO BE INSTALLED WITH FROST TREATMENT PER OPSD 803.031 WHERE APPLICABLE.
29. ALL STORM MANHOLES WITH PIPE LESS THAN 900MM IN DIAMETER SHALL BE CONSTRUCTED WITH A 300MM SUMP AS PER SDG, CLAUSE 6.2.6.

WATERMAIN

30. ALL WATERMAIN INSTALLATION SHALL CONFORM TO THE LATEST REVISIONS OF THE CITY OF OTTAWA AND THE ONTARIO PROVINCIAL STANDARD DRAWINGS (OPSD) AND SPECIFICATIONS (OPSS).
31. ALL PVC WATERMAINS SHALL BE AWWA C-900 CLASS 150, SDR 18 OR APPROVED EQUIVALENT.
32. ALL WATER SERVICES LESS THAN OR EQUAL TO 50MM IN DIAMETER TO BE TYPE 'K' COPPER.
33. WATERMAIN TRENCH AND BEDDING SHALL BE IN ACCORDANCE WITH CITY OF OTTAWA STANDARD W17. UNLESS SPECIFIED OTHERWISE. BEDDING AND COVER MATERIAL SHALL BE SPECIFIED BY THE PROJECT GEOTECHNICAL ENGINEER.
34. ALL PVC WATERMAINS, SHALL BE INSTALLED WITH A 10 GAUGE STRANDED COPPER TWU OR RWU TRACER WIRE IN ACCORDANCE WITH CITY OF OTTAWA STD. W.36.
35. CATHODIC PROTECTION IS REQUIRED ON ALL METALLIC FITTINGS PER CITY OF OTTAWA STD.25.5 AND W25.6.
36. VALVE BOXES SHALL BE INSTALLED PER CITY OF OTTAWA STD W24.
37. WATERMAIN IN FILL AREAS TO BE INSTALLED WITH RESTRAINED JOINTS PER CITY OF OTTAWA STD.25.5 AND W25.6.
38. THRUST BLOCKING OF WATERMAINS TO BE INSTALLED PER CITY OF OTTAWA STD. W25.3 AND W25.4.
39. THE CONTRACTOR SHALL PROVIDE ALL TEMPORARY CAPS, PLUGS, BLOW-OFFS, AND NOZZLES REQUIRED FOR TESTING AND DISINFECTION OF THE WATERMAIN.
40. WATERMAIN CROSSING OVER AND BELOW SEWERS SHALL BE IN ACCORDANCE WITH THE CITY OF OTTAWA STD. W25,2 AND W25, RESPECTIVELY.
41. WATER SERVICES ARE TO BE INSULATED PER CITY STD. W23 WHERE SEPARATION BETWEEN SERVICES AND MAINTENANCE HOLES ARE LESS THAN 2.4M.
42. THE MINIMUM VERTICAL CLEARANCE BETWEEN WATERMAIN AND SEWER/UTILITY IS 0.5M PER MOE GUIDELINES. FOR CROSSING UNDER SEWERS, ADEQUATE STRUCTURAL SUPPORT FOR THE SEWER IS REQUIRED TO PREVENT EXCESSIVE DEFLECTION OF JOINTS AND SETTLING. THE LENGTH OF WATER PIPE SHALL BE CENTERED AT THE POINT OF CROSSING TO ENSURE THAT THE JOINTS WILL BE EQUIDISTANT AND AS FAR AS POSSIBLE FROM THE SEWER.
43. ALL WATERMAINS SHALL HAVE A MINIMUM COVER OR 2.4M, OTHERWISE THERMAL INSULATION IS REQUIRED AS PER STD DWG W22.
44. GENERAL WATER PLANT TO UTILITY CLEARANCE AS PER STD DWG R20.
45. FIRE HYDRANT INSTALLATION AS PER STD DWG W19, ALL BOTTOM OF HYDRANT FLANGE ELEVATIONS TO BE INSTALLED 0.10M ABOVE PROPOSED FINISHED GRADE AT HYDRANT; FIRE HYDRANT LOCATION AS PER STD DWG W18.
46. BUILDING SERVICE TO BE CAPPED 1.0M OFF THE FACE OF THE BUILDING UNLESS OTHERWISE NOTED AND MUST BE RESTRAINED A MINIMUM OF 12M BACK FROM STUB.
47. ALL WATERMAINS SHALL BE HYDROSTATICALLY TESTED IN ACCORDANCE WITH THE CITY OF OTTAWA AND ONTARIO GUIDELINES UNLESS OTHERWISE DIRECTED. PROVISIONS FOR FLUSHING WATER LINE PRIOR TO TESTING, ETC. MUST BE PROVIDED.
48. ALL WATERMAINS SHALL BE BACTERIOLOGICALLY TESTED IN ACCORDANCE WITH THE CITY OF OTTAWA AND ONTARIO GUIDELINES. ALL CHLORINATED WATER TO BE DISCHARGED AND PRETREATED TO ACCEPTABLE LEVELS PRIOR TO DISCHARGE. ALL DISCHARGED WATER MUST BE CONTROLLED AND TREATED SO AS NOT TO ADVERSELY EFFECT ENVIRONMENT. IT IS RESPONSIBILITY OF THE CONTRACTOR TO ENSURE THAT ALL MUNICIPAL AND/OR PROVINCIAL REQUIREMENTS ARE FOLLOWED.
49. ALL WATERMAIN STUBS SHALL BE TERMINATED WITH A PLUG AND 50MM BLOW OFF UNLESS OTHERWISE NOTED.

USE AND INTERPRETATION OF DRAWINGS

GENERAL CONDITIONS OF THE CONTRACT FOR CONSTRUCTION ARE PART OF THE CONTRACT DOCUMENTS AND DESCRIBE USE AND INTENT OF THE DRAWING. THE CONTRACT DOCUMENTS INCLUDE NOT ONLY THE DRAWINGS, BUT ALSO THE OWNER-CONTRACTOR AGREEMENTS, CONDITIONS OF THE CONTRACT, THE SPECIFICATIONS, ADDENDA, AND MODIFICATIONS ISSUED AFTER EXECUTION OF THE CONTRACT. THESE CONTRACT DOCUMENTS ARE COMPLEMENTARY, AND WHAT IS REQUIRED BY ANY ONE SHALL BE BINDING AS IF REQUIRED BY ALL. WORK NOT COMPLETELY DELINEATED HEREON SHALL BE CONSTRUCTED OF THE SAME MATERIALS AND DETAILED SIMILARLY AS WORK SHOWN MORE COMPLETELY ELSEWHERE IN THE CONTRACT DOCUMENTS.

BY USE OF THE DRAWINGS FOR CONSTRUCTION OF THE PROJECT, THE OWNER CONFIRMS THAT HE HAS REVIEWED AND APPROVED THE DRAWINGS. THE CONTRACTOR CONFIRMS THAT HE HAS VISITED THE SITE, FAMILIARIZED HIMSELF WITH THE LOCAL CONDITIONS, VERIFIED FIELD DIMENSIONS AND CORRELATED HIS OBSERVATIONS WITH THE REQUIREMENTS OF THE CONTRACT DOCUMENTS.

AS INSTRUMENTS OF SERVICE, ALL DRAWINGS, SPECIFICATIONS, CADD FILES OR OTHER ELECTRONIC MEDIA AND COPIED THERE OF FURNISHED BY THE ENGINEER ARE HIS PROPERTY. THEY ARE TO BE USED ONLY FOR THIS PROJECT AND ARE NOT TO BE USED ON ANY OTHER PROJECT, INCLUDING REPEATS OF THE PROJECT. CHANGES TO THE DRAWINGS MAY ONLY BE MADE BY THE ENGINEER.

UNLESS THE REVISION TITLE IS "ISSUED FOR CONSTRUCTION", THESE DRAWINGS SHALL BE CONSIDERED PRELIMINARY AND SHALL NOT BE USED AS A CONSTRUCTION DOCUMENT.

THESE DRAWINGS ILLUSTRATES THE WORK TO BE DONE. THE ENGINEER IS NOT RESPONSIBLE FOR THE MEANS, METHODS, TECHNIQUES, SEQUENCES, AND PROCEDURES USED TO DO THE WORK, OR THE SAFETY ASPECTS OF CONSTRUCTION, AND NOTHING ON THESE DRAWINGS EXPRESSED OR IMPLIED CHANGES THIS CONDITION. CONTRACTOR SHALL DETERMINE ALL CONDITIONS AT THE SITE AND SHALL BE RESPONSIBLE FOR KNOWING HOW THEY AFFECT THE WORK. SUBMITTAL OF A BID TO PERFORM THIS WORK IS ACKNOWLEDGEMENT OF THE RESPONSIBILITIES, AND THAT THEY HAVE BEEN FULLY CONSIDERED IN PLANNING OF THE WORK, AND THE BID PRICE. NO CLAIMS FOR EXTRA CHARGES DUE TO THESE CONDITIONS WILL BE FORTHCOMING.

UNAUTHORIZED CHANGES:

IN THE EVENT THE CLIENT, THE CLIENT'S CONTRACTORS OR SUBCONTRACTORS, OR ANYONE FOR WHOM THE CLIENT IS LEGALLY LIABLE MAKES OR PERMITS TO BE MADE ANY CHANGES TO ANY REPORTS, PLANS, SPECIFICATIONS OR OTHER CONSTRUCTION DOCUMENTS PREPARED BY LRL ASSOCIATES LTD. (LRL) WITHOUT OBTAINING LRL'S PRIOR WRITTEN CONSENT, THE CLIENT SHALL ASSUME FULL RESPONSIBILITY FOR THE RESULTS OF SUCH CHANGES. THEREFORE THE CLIENT AGREES TO WAIVE ANY CLAIM AGAINST LRL AND TO RELEASE LRL FROM ANY LIABILITY ARISING DIRECTLY OR INDIRECTLY FROM SUCH UNAUTHORIZED CHANGES.

IN ADDITION, THE CLIENT AGREES, TO THE FULLEST EXTENT PERMITTED BY LAW, TO INDEMNIFY AND HOLD HARMLESS LRL FROM ANY DAMAGES, LIABILITIES OR COST, INCLUDING REASONABLE ATTORNEY'S FEES AND COST OF DEFENSE, ARISING FROM SUCH CHANGES.

IN ADDITION, THE CLIENT AGREES TO INCLUDE IN ANY CONTRACTS FOR CONSTRUCTION APPROPRIATE LANGUAGE THAT PROHIBITS THE CONTRACTOR OR ANY SUBCONTRACTORS OF ANY TIER FROM MAKING ANY CHANGES OR MODIFICATIONS TO LRL'S CONSTRUCTION DOCUMENTS WITHOUT THE PRIOR WRITTEN APPROVAL OF LRL AND THAT FURTHER REQUIRES THE CONTRACTOR TO INDEMNIFY BOTH LRL AND THE CLIENT FROM ANY LIABILITY OR COST ARISING FROM SUCH CHANGES MADE WITHOUT SUCH PROPER AUTHORIZATION.

GENERAL NOTES:

EXISTING SERVICES AND UTILITIES SHOWN ON THESE DRAWINGS ARE TAKEN FROM THE BEST AVAILABLE RECORDS, BUT MAY NOT BE COMPLETE OR TO DATE. CONTRACTOR SHALL VERIFY IN FIELD FOR LOCATION AND ELEVATION OF PIPES AND CHECK WITH THE UTILITY COMPANIES BEFORE DIGGING OR PERFORMING WORK.

CONTRACTOR IS ADVISED TO COLLECT INFORMATION ON SOIL CONDITIONS BEFORE START OF CONSTRUCTION.

THE ENGINEER WAIVES ANY AND ALL RESPONSIBILITY AND LIABILITY FOR PROBLEMS WHICH ARISE FROM FAILURE TO FOLLOW THESE PLANS, SPECIFICATIONS AND THE DESIGN INTENT THEY CONVEY, OR FOR PROBLEMS WHICH ARISE FROM OTHERS' FAILURE TO OBTAIN AND/OR FOLLOW THE ENGINEER'S GUIDANCE WITH RESPECT TO ANY ERRORS, OMISSIONS, INCONSISTENCIES AMBIGUITIES OR CONFLICTS WHICH ARE ALLEGED.

CONTRACTOR TO VERIFY ALL DIMENSIONS AND NOTIFY THE ENGINEER OF ANY DISCREPANCIES BEFORE WORK COMMENCES. DO NOT SCALE DRAWINGS.

NOT FOR CONSTRUCTION TENDER OR PERMIT

No.	REVISIONS	BY	DATE
01	ISSUED FOR APPROVAL	T.H.	11 OCT 2022

LICENSED PROFESSIONAL ENGINEER
M. BASNET
100501996
2022/10/11
PROVINCE OF ONTARIO

NOT AUTHENTIC UNLESS SIGNED AND DATED

LRL
ENGINEERING | INGÉNIERIE
5430 Canotek Road | Ottawa, ON, K1J 9G2
www.lrl.ca | (613) 842-3434

CLIENT
GSI PROPERTIES

DESIGNED BY:	DRAWN BY:	APPROVED BY:
A.S.	A.O.	V.J.

PROJECT
PROPOSED 7-STOREY CONDO
RE-DEVELOPMENT
424 CHURCHILL AVE
OTTAWA, ON

DRAWING TITLE
GENERAL NOTES

PROJECT NO.
220224

DATE
AUGUST, 2022

C001

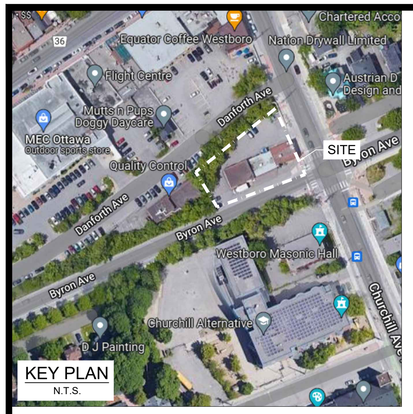

KEY PLAN
N.T.S.

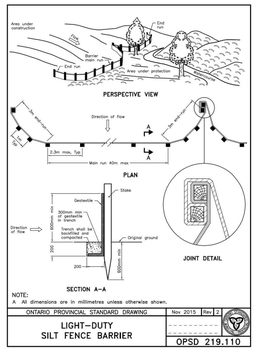

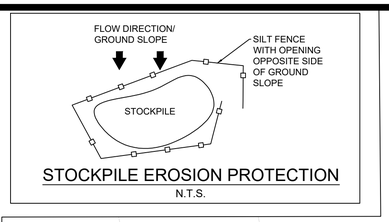

STOCKPILE EROSION PROTECTION
N.T.S.

BENCHMARK FIRE HYDRANT
TOP OF SPINDLE = 70.07m

DANFORTH AVENUE

CAR ENTRY
EXIT
WASTE ENTRY
WASTE ENTRY
PROPOSED 8-STOREY MULTI-UNIT (+ 2 PARKING LVLS.) APARTMENT BUILDING FFE = 75.9 m GROUND FLOOR AVERAGE GRADE 73.10
PRINCIPAL ENTRY 2
UP
UP
LANDS.
EXIT
PRINCIPAL ENTRY 1

TERRACE LOCATED ON LEVEL 2 (AMENITIES FLOOR - NOT ON GROUND LEVEL). REFER TO ARCH DRAWINGS. DRAINAGE TO BE ACCOMMODATED INTERNALLY VIA THE BUILDING MECHANICAL SYSTEM. *OUT OF CIVIL SCOPE

PROPOSED SILT FENCE BARRIER AS PER OPSD 219.110

BYRON AVENUE

CHURCHILL AVENUE

LEGEND:

- EXISTING PROPERTY LINE TO REMAIN
- PROPOSED CURB
- PROPOSED SILT FENCE AS PER OPSD 219.110
- PROPOSED DOOR ENTRANCE/EXIT
- PROPOSED GRASS AREA (100mm TOP SOIL & SOD)
- PROPOSED CONCRETE FEATURES/SLAB
- PROPOSED HEAVY DUTY ASPHALT
- PROPOSED LIGHT DUTY ASPHALT
- ×50.00 PROPOSED ELEVATION
- ×50.00HP PROPOSED HIGH POINT ELEVATION
- ×50.00S PROPOSED SWALE ELEVATION
- ×50.00BC PROPOSED BOTTOM OF CURB / ASPHALT ELEVATION
- ×50.00TC PROPOSED TOP OF CURB ELEVATION
- ×50.00BW PROPOSED EXPOSED BOTTOM OF RETAINING WALL
- ×50.00TW PROPOSED TOP OF RETAINING WALL
- ×50.00EX MATCH INTO EXISTING ELEVATION
- ×50.00EX BC MATCH INTO EXISTING BOTTOM OF CURB
- ×50.00EX TC MATCH INTO EXISTING TOP OF CURB
- ×50.00TPW PROPOSED TOP OF PLANTER WALL
- PROPOSED OVERLAND MAJOR FLOW ROUTE
- STM STM PROPOSED STORM SEWER
- SAN SAN PROPOSED SANITARY SEWER
- WTR WTR PROPOSED WATERMAIN
- STM STM EXISTING STORM SEWER
- SAN SAN EXISTING SANITARY SEWER
- WTR WTR EXISTING WATERMAIN
- EXISTING MANHOLE
- EXISTING CATCHBASIN
- PROPOSED CATCHBASIN-MANHOLE/CATCHBASIN
- PROPOSED MANHOLE
- PROPOSED CURB STOP
- PROPOSED ROOF DRAIN
- PROPOSED 100 YEAR HIGH WATER LEVEL
- STORM WATERSHED EXTENT
- WS-XX CONTROLLED AREA RUNOFF — WATERSHED NAME / RUNOFF COEFFICIENT / AREA IN HECTARES

USE AND INTERPRETATION OF DRAWINGS

GENERAL CONDITIONS OF THE CONTRACT FOR CONSTRUCTION ARE PART OF THE CONTRACT DOCUMENTS AND DESCRIBE USE AND INTENT OF THE DRAWING. THE CONTRACT DOCUMENTS INCLUDE NOT ONLY THE DRAWINGS, BUT ALSO THE OWNER-CONTRACTOR AGREEMENTS, CONDITIONS OF THE CONTRACT, THE SPECIFICATIONS, ADDENDA, AND MODIFICATIONS ISSUED AFTER EXECUTION OF THE CONTRACT. THESE CONTRACT DOCUMENTS ARE COMPLEMENTARY, AND WHAT IS REQUIRED BY ANY ONE SHALL BE BINDING AS IF REQUIRED BY ALL. WORK NOT COMPLETELY DELINEATED HEREON SHALL BE CONSTRUCTED OF THE SAME MATERIALS AND DETAILED SIMILARLY AS WORK SHOWN MORE COMPLETELY ELSEWHERE IN THE CONTRACT DOCUMENTS.

BY USE OF THE DRAWINGS FOR CONSTRUCTION OF THE PROJECT, THE OWNER CONFIRMS THAT HE HAS REVIEWED AND APPROVED THE DRAWINGS. THE CONTRACTOR CONFIRMS THAT HE HAS VISITED THE SITE, FAMILIARIZED HIMSELF WITH THE LOCAL CONDITIONS, VERIFIED FIELD DIMENSIONS AND CORRELATED HIS OBSERVATIONS WITH THE REQUIREMENTS OF THE CONTRACT DOCUMENTS.

AS INSTRUMENTS OF SERVICE, ALL DRAWINGS, SPECIFICATIONS, CADD FILES OR OTHER ELECTRONIC MEDIA AND COPIED THERE OF FURNISHED BY THE ENGINEER ARE HIS PROPERTY. THEY ARE TO BE USED ONLY FOR THIS PROJECT AND ARE NOT TO BE USED ON ANY OTHER PROJECT, INCLUDING REPEATS OF THE PROJECT. CHANGES TO THE DRAWINGS MAY ONLY BE MADE BY THE ENGINEER.

UNLESS THE REVISION TITLE IS "ISSUED FOR CONSTRUCTION", THESE DRAWINGS SHALL BE CONSIDERED PRELIMINARY AND SHALL NOT BE USED AS A CONSTRUCTION DOCUMENT.

THESE DRAWINGS ILLUSTRATES THE WORK TO BE DONE. THE ENGINEER IS NOT RESPONSIBLE FOR THE MEANS, METHODS, TECHNIQUES, SEQUENCES, AND PROCEDURES USED TO DO THE WORK, OR THE SAFETY ASPECTS OF CONSTRUCTION, AND NOTHING ON THESE DRAWINGS EXPRESSED OR IMPLIED CHANGES THIS CONDITION. CONTRACTOR SHALL DETERMINE ALL CONDITIONS AT THE SITE AND SHALL BE RESPONSIBLE FOR KNOWING HOW THEY AFFECT THE WORK. SUBMITTAL OF A BID TO PERFORM THIS WORK IS ACKNOWLEDGEMENT OF THE RESPONSIBILITIES, AND THAT THEY HAVE BEEN FULLY CONSIDERED IN PLANNING OF THE WORK, AND THE BID PRICE. NO CLAIMS FOR EXTRA CHARGES DUE TO THESE CONDITIONS WILL BE FORTHCOMING.

UNAUTHORIZED CHANGES:

IN THE EVENT THE CLIENT, THE CLIENT'S CONTRACTORS OR SUBCONTRACTORS, OR ANYONE FOR WHOM THE CLIENT IS LEGALLY LIABLE MAKES OR PERMITS TO BE MADE ANY CHANGES TO ANY REPORTS, PLANS, SPECIFICATIONS OR OTHER CONSTRUCTION DOCUMENTS PREPARED BY LRL ASSOCIATES LTD. (LRL) WITHOUT OBTAINING LRL'S PRIOR WRITTEN CONSENT, THE CLIENT SHALL ASSUME FULL RESPONSIBILITY FOR THE RESULTS OF SUCH CHANGES, THEREFORE THE CLIENT AGREES TO WAIVE ANY CLAIM AGAINST LRL AND TO RELEASE LRL FROM ANY LIABILITY ARISING DIRECTLY OR INDIRECTLY FROM SUCH UNAUTHORIZED CHANGES.

IN ADDITION, THE CLIENT AGREES, TO THE FULLEST EXTENT PERMITTED BY LAW, TO INDEMNIFY AND HOLD HARMLESS LRL FROM ANY DAMAGES, LIABILITIES OR COST, INCLUDING REASONABLE ATTORNEY'S FEES AND COST OF DEFENSE, ARISING FROM SUCH CHANGES.

IN ADDITION, THE CLIENT AGREES TO INCLUDE IN ANY CONTRACTS FOR CONSTRUCTION APPROPRIATE LANGUAGE THAT PROHIBITS THE CONTRACTOR OR ANY SUBCONTRACTORS OF ANY TIER FROM MAKING ANY CHANGES OR MODIFICATIONS TO LRL'S CONSTRUCTION DOCUMENTS WITHOUT THE PRIOR WRITTEN APPROVAL OF LRL AND THAT FURTHER REQUIRES THE CONTRACTOR TO INDEMNIFY BOTH LRL AND THE CLIENT FROM ANY LIABILITY OR COST ARISING FROM SUCH CHANGES MADE WITHOUT SUCH PROPER AUTHORIZATION.

GENERAL NOTES:

EXISTING SERVICES AND UTILITIES SHOWN ON THESE DRAWINGS ARE TAKEN FROM THE BEST AVAILABLE RECORDS, BUT MAY NOT BE COMPLETE OR TO DATE. CONTRACTOR SHALL VERIFY IN FIELD FOR LOCATION AND ELEVATION OF PIPES AND CHECK WITH THE UTILITY COMPANIES BEFORE DIGGING OR PERFORMING WORK.

CONTRACTOR IS ADVISED TO COLLECT INFORMATION ON SOIL CONDITIONS BEFORE START OF CONSTRUCTION.

THE ENGINEER WAIVES ANY AND ALL RESPONSIBILITY AND LIABILITY FOR PROBLEMS WHICH ARISE FROM FAILURE TO FOLLOW THESE PLANS, SPECIFICATIONS AND THE DESIGN INTENT THEY CONVEY, OR FOR PROBLEMS WHICH ARISE FROM OTHERS' FAILURE TO OBTAIN AND/OR FOLLOW THE ENGINEER'S GUIDANCE WITH RESPECT TO ANY ERRORS, OMISSIONS, INCONSISTENCIES AMBIGUITIES OR CONFLICTS WHICH ARE ALLEGED.

CONTRACTOR TO VERIFY ALL DIMENSIONS AND NOTIFY THE ENGINEER OF ANY DISCREPANCIES BEFORE WORK COMMENCES. DO NOT SCALE DRAWINGS.

1.5m 0 3.0 6.0m

SCALE: 1:125

NOT FOR CONSTRUCTION TENDER OR PERMIT

No.	REVISIONS	BY	DATE
01	ISSUED FOR APPROVAL	T.H.	11 OCT 2022

LICENSED PROFESSIONAL ENGINEER
M. BASNET
100501996
2022/10/11
PROVINCE OF ONTARIO

NOT AUTHENTIC UNLESS SIGNED AND DATED

LRL
ENGINEERING | INGÉNIERIE
5430 Canotek Road | Ottawa, ON, K1J 9G2
www.lrl.ca | (613) 842-3434

CLIENT
GSI PROPERTIES

DESIGNED BY:	DRAWN BY:	APPROVED BY:
A.S.	A.O.	V.J.

PROJECT
PROPOSED 7-STOREY CONDO
RE-DEVELOPMENT
424 CHURCHILL AVE
OTTAWA, ON

DRAWING TITLE
EROSION AND SEDIMENT CONTROL PLAN

PROJECT NO.
220224

DATE
AUGUST, 2022

C101

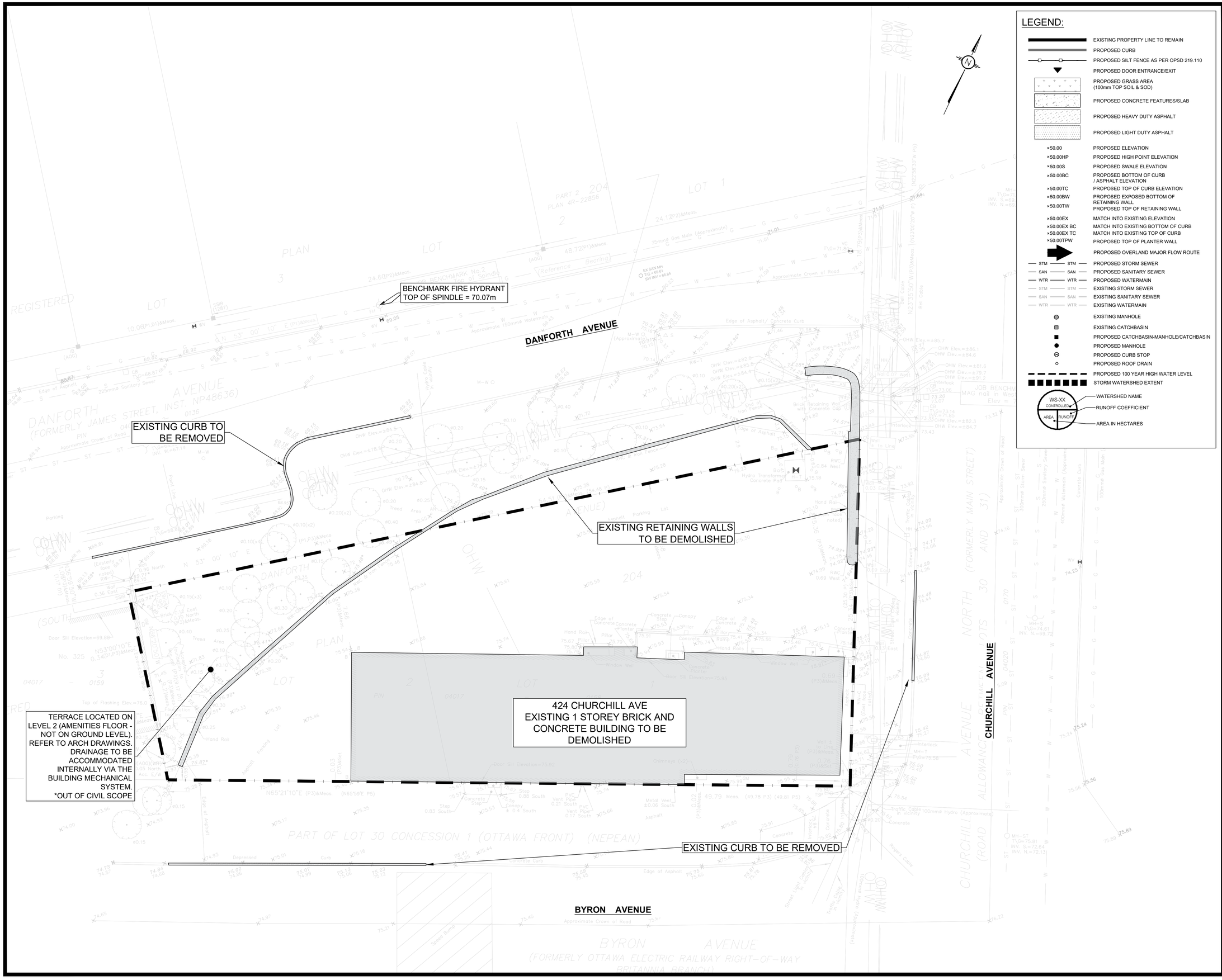

LEGEND:

- EXISTING PROPERTY LINE TO REMAIN
- PROPOSED CURB
- PROPOSED SILT FENCE AS PER OPSD 219.110
- PROPOSED DOOR ENTRANCE/EXIT
- PROPOSED GRASS AREA (100mm TOP SOIL & SOD)
- PROPOSED CONCRETE FEATURES/SLAB
- PROPOSED HEAVY DUTY ASPHALT
- PROPOSED LIGHT DUTY ASPHALT
- ×50.00 PROPOSED ELEVATION
- ×50.00HP PROPOSED HIGH POINT ELEVATION
- ×50.00S PROPOSED SWALE ELEVATION
- ×50.00BC PROPOSED BOTTOM OF CURB / ASPHALT ELEVATION
- ×50.00TC PROPOSED TOP OF CURB ELEVATION
- ×50.00BW PROPOSED EXPOSED BOTTOM OF RETAINING WALL
- ×50.00TW PROPOSED TOP OF RETAINING WALL
- ×50.00EX MATCH INTO EXISTING ELEVATION
- ×50.00EX BC MATCH INTO EXISTING BOTTOM OF CURB
- ×50.00EX TC MATCH INTO EXISTING TOP OF CURB
- ×50.00TPW PROPOSED TOP OF PLANTER WALL
- PROPOSED OVERLAND MAJOR FLOW ROUTE
- STM STM PROPOSED STORM SEWER
- SAN SAN PROPOSED SANITARY SEWER
- WTR WTR PROPOSED WATERMAIN
- STM STM EXISTING STORM SEWER
- SAN SAN EXISTING SANITARY SEWER
- WTR WTR EXISTING WATERMAIN
- EXISTING MANHOLE
- EXISTING CATCHBASIN
- PROPOSED CATCHBASIN-MANHOLE/CATCHBASIN
- PROPOSED MANHOLE
- PROPOSED CURB STOP
- PROPOSED ROOF DRAIN
- PROPOSED 100 YEAR HIGH WATER LEVEL
- STORM WATERSHED EXTENT

WS-XX (CONTROLLED) — AREA — RUNOFF

- WATERSHED NAME
- RUNOFF COEFFICIENT
- AREA IN HECTARES

USE AND INTERPRETATION OF DRAWINGS

GENERAL CONDITIONS OF THE CONTRACT FOR CONSTRUCTION ARE PART OF THE CONTRACT DOCUMENTS AND DESCRIBE USE AND INTENT OF THE DRAWING. THE CONTRACT DOCUMENTS INCLUDE NOT ONLY THE DRAWINGS, BUT ALSO THE OWNER-CONTRACTOR AGREEMENTS, CONDITIONS OF THE CONTRACT, THE SPECIFICATIONS, ADDENDA, AND MODIFICATIONS ISSUED AFTER EXECUTION OF THE CONTRACT. THESE CONTRACT DOCUMENTS ARE COMPLEMENTARY, AND WHAT IS REQUIRED BY ANY ONE SHALL BE BINDING AS IF REQUIRED BY ALL. WORK NOT COMPLETELY DELINEATED HEREON SHALL BE CONSTRUCTED OF THE SAME MATERIALS AND DETAILED SIMILARLY AS WORK SHOWN MORE COMPLETELY ELSEWHERE IN THE CONTRACT DOCUMENTS.

BY USE OF THE DRAWINGS FOR CONSTRUCTION OF THE PROJECT, THE OWNER CONFIRMS THAT HE HAS REVIEWED AND APPROVED THE DRAWINGS. THE CONTRACTOR CONFIRMS THAT HE HAS VISITED THE SITE, FAMILIARIZED HIMSELF WITH THE LOCAL CONDITIONS, VERIFIED FIELD DIMENSIONS AND CORRELATED HIS OBSERVATIONS WITH THE REQUIREMENTS OF THE CONTRACT DOCUMENTS.

AS INSTRUMENTS OF SERVICE, ALL DRAWINGS, SPECIFICATIONS, CADD FILES OR OTHER ELECTRONIC MEDIA AND COPIED THERE OF FURNISHED BY THE ENGINEER ARE HIS PROPERTY. THEY ARE TO BE USED ONLY FOR THIS PROJECT AND ARE NOT TO BE USED ON ANY OTHER PROJECT, INCLUDING REPEATS OF THE PROJECT. CHANGES TO THE DRAWINGS MAY ONLY BE MADE BY THE ENGINEER.

UNLESS THE REVISION TITLE IS "ISSUED FOR CONSTRUCTION", THESE DRAWINGS SHALL BE CONSIDERED PRELIMINARY AND SHALL NOT BE USED AS A CONSTRUCTION DOCUMENT.

THESE DRAWINGS ILLUSTRATES THE WORK TO BE DONE. THE ENGINEER IS NOT RESPONSIBLE FOR THE MEANS, METHODS, TECHNIQUES, SEQUENCES, AND PROCEDURES USED TO DO THE WORK, OR THE SAFETY ASPECTS OF CONSTRUCTION, AND NOTHING ON THESE DRAWINGS EXPRESSED OR IMPLIED CHANGES THIS CONDITION. CONTRACTOR SHALL DETERMINE ALL CONDITIONS AT THE SITE AND SHALL BE RESPONSIBLE FOR KNOWING HOW THEY AFFECT THE WORK. SUBMITTAL OF A BID TO PERFORM THIS WORK IS ACKNOWLEDGEMENT OF THE RESPONSIBILITIES, AND THAT THEY HAVE BEEN FULLY CONSIDERED IN PLANNING OF THE WORK, AND THE BID PRICE. NO CLAIMS FOR EXTRA CHARGES DUE TO THESE CONDITIONS WILL BE FORTHCOMING.

UNAUTHORIZED CHANGES:

IN THE EVENT THE CLIENT, THE CLIENT'S CONTRACTORS OR SUBCONTRACTORS, OR ANYONE FOR WHOM THE CLIENT IS LEGALLY LIABLE MAKES OR PERMITS TO BE MADE ANY CHANGES TO ANY REPORTS, PLANS, SPECIFICATIONS OR OTHER CONSTRUCTION DOCUMENTS PREPARED BY LRL ASSOCIATES LTD. (LRL) WITHOUT OBTAINING LRL'S PRIOR WRITTEN CONSENT, THE CLIENT SHALL ASSUME FULL RESPONSIBILITY FOR THE RESULTS OF SUCH CHANGES, THEREFORE THE CLIENT AGREES TO WAIVE ANY CLAIM AGAINST LRL AND TO RELEASE LRL FROM ANY LIABILITY ARISING DIRECTLY OR INDIRECTLY FROM SUCH UNAUTHORIZED CHANGES.

IN ADDITION, THE CLIENT AGREES, TO THE FULLEST EXTENT PERMITTED BY LAW, TO INDEMNIFY AND HOLD HARMLESS LRL FROM ANY DAMAGES, LIABILITIES OR COST, INCLUDING REASONABLE ATTORNEY'S FEES AND COST OF DEFENSE, ARISING FROM SUCH CHANGES.

IN ADDITION, THE CLIENT AGREES TO INCLUDE IN ANY CONTRACTS FOR CONSTRUCTION APPROPRIATE LANGUAGE THAT PROHIBITS THE CONTRACTOR OR ANY SUBCONTRACTORS OF ANY TIER FROM MAKING ANY CHANGES OR MODIFICATIONS TO LRL'S CONSTRUCTION DOCUMENTS WITHOUT THE PRIOR WRITTEN APPROVAL OF LRL AND THAT FURTHER REQUIRES THE CONTRACTOR TO INDEMNIFY BOTH LRL AND THE CLIENT FROM ANY LIABILITY OR COST ARISING FROM SUCH CHANGES MADE WITHOUT SUCH PROPER AUTHORIZATION.

GENERAL NOTES:

EXISTING SERVICES AND UTILITIES SHOWN ON THESE DRAWINGS ARE TAKEN FROM THE BEST AVAILABLE RECORDS, BUT MAY NOT BE COMPLETE OR TO DATE. CONTRACTOR SHALL VERIFY IN FIELD FOR LOCATION AND ELEVATION OF PIPES AND CHECK WITH THE UTILITY COMPANIES BEFORE DIGGING OR PERFORMING WORK.

CONTRACTOR IS ADVISED TO COLLECT INFORMATION ON SOIL CONDITIONS BEFORE START OF CONSTRUCTION.

THE ENGINEER WAIVES ANY AND ALL RESPONSIBILITY AND LIABILITY FOR PROBLEMS WHICH ARISE FROM FAILURE TO FOLLOW THESE PLANS, SPECIFICATIONS AND THE DESIGN INTENT THEY CONVEY, OR FOR PROBLEMS WHICH ARISE FROM OTHERS' FAILURE TO OBTAIN AND/OR FOLLOW THE ENGINEER'S GUIDANCE WITH RESPECT TO ANY ERRORS, OMISSIONS, INCONSISTENCIES AMBIGUITIES OR CONFLICTS WHICH ARE ALLEGED.

CONTRACTOR TO VERIFY ALL DIMENSIONS AND NOTIFY THE ENGINEER OF ANY DISCREPANCIES BEFORE WORK COMMENCES. DO NOT SCALE DRAWINGS.

1.5m 0 3.0 6.0m

SCALE: 1:125

NOT FOR CONSTRUCTION TENDER OR PERMIT

No.	REVISIONS	BY	DATE
01	ISSUED FOR APPROVAL	T.H.	11 OCT 2022

LICENSED PROFESSIONAL ENGINEER
M. BASNET
100501996
2022/10/11
PROVINCE OF ONTARIO
NOT AUTHENTIC UNLESS SIGNED AND DATED

LRL
ENGINEERING | INGÉNIERIE
5430 Canotek Road I Ottawa, ON, K1J 9G2
www.lrl.ca I (613) 842-3434

CLIENT
GSI PROPERTIES

DESIGNED BY:	DRAWN BY:	APPROVED BY:
A.S.	A.O.	V.J.

PROJECT
PROPOSED 7-STOREY CONDO
RE-DEVELOPMENT
424 CHURCHILL AVE
OTTAWA, ON

DRAWING TITLE
DEMOLITION PLAN

PROJECT NO.
220224

DATE
AUGUST, 2022

C102

LEGEND:

- EXISTING PROPERTY LINE TO REMAIN
- PROPOSED CURB
- PROPOSED SILT FENCE AS PER OPSD 219.110
- PROPOSED DOOR ENTRANCE/EXIT
- PROPOSED GRASS AREA (100mm TOP SOIL & SOD)
- PROPOSED CONCRETE FEATURES/SLAB
- PROPOSED HEAVY DUTY ASPHALT
- PROPOSED LIGHT DUTY ASPHALT
- ×50.00 PROPOSED ELEVATION
- ×50.00HP PROPOSED HIGH POINT ELEVATION
- ×50.00S PROPOSED SWALE ELEVATION
- ×50.00BC PROPOSED BOTTOM OF CURB / ASPHALT ELEVATION
- ×50.00TC PROPOSED TOP OF CURB ELEVATION
- ×50.00BW PROPOSED EXPOSED BOTTOM OF RETAINING WALL
- ×50.00TW PROPOSED TOP OF RETAINING WALL
- ×50.00EX MATCH INTO EXISTING ELEVATION
- ×50.00EX BC MATCH INTO EXISTING BOTTOM OF CURB
- ×50.00EX TC MATCH INTO EXISTING TOP OF CURB
- ×50.00TPW PROPOSED TOP OF PLANTER WALL
- PROPOSED OVERLAND MAJOR FLOW ROUTE
- STM STM PROPOSED STORM SEWER
- SAN SAN PROPOSED SANITARY SEWER
- WTR WTR PROPOSED WATERMAIN
- STM STM EXISTING STORM SEWER
- SAN SAN EXISTING SANITARY SEWER
- WTR WTR EXISTING WATERMAIN
- EXISTING MANHOLE
- EXISTING CATCHBASIN
- PROPOSED CATCHBASIN-MANHOLE/CATCHBASIN
- PROPOSED MANHOLE
- PROPOSED CURB STOP
- PROPOSED ROOF DRAIN
- PROPOSED 100 YEAR HIGH WATER LEVEL
- STORM WATERSHED EXTENT
- WS-XX (CONTROLLED) / (AREA) (RUNOFF) — WATERSHED NAME / RUNOFF COEFFICIENT / AREA IN HECTARES

PAVEMENT STRUCTURE

COURSE	MATERIAL	THICKNESS (mm) AUTOMOBILE PARKING	THICKNESS (mm) TRUCK ROUTE (HEAVY TRAFFIC)
SURFACE	HL 3 A/C (PG 58-28)	50	40
BINDER	HL 8 A/C (PG 58-28)	--	50
BASECOURSE	OPSS GRANULAR "A"	150	150
SUBBASE	OPSS GRANULAR "B" TYPE II	300	350

NOTE:
IN PREPARATION FOR PAVEMENT CONSTRUCTION AT THIS SITE, ANY SURFICIAL OR NEAR SURFACE/SUBGRADE LEVEL TOPSOIL AND ANY SOFT, WET OR DELETERIOUS MATERIALS SHOULD BE REMOVED FROM THE PROPOSED PAVED AREAS. THE EXPOSED SUBGRADE SHOULD BE INSPECTED AND APPROVED BY GEOTECHNICAL PERSONNEL AND ANY SOFT AREAS EVIDENT SHOULD BE SUBEXCAVATED AND REPLACED WITH SUITABLE EARTH BORROW APPROVED BY THE GEOTECHNICAL ENGINEER. THE SUBGRADE SHOULD BE SHAPED AND CROWNED TO PROMOTE DRAINAGE OF THE SITE DRAINAGE STRUCTURES. FOLLOWING APPROVAL OF THE PREPARATION OF THE SUBGRADE, THE PAVEMENT GRANULARS MAY BE PLACED. PAVEMENT STRUCTURE AS PER GEO-TECHNICAL REPORT BY DST CONSULTING ON JULY 2021.

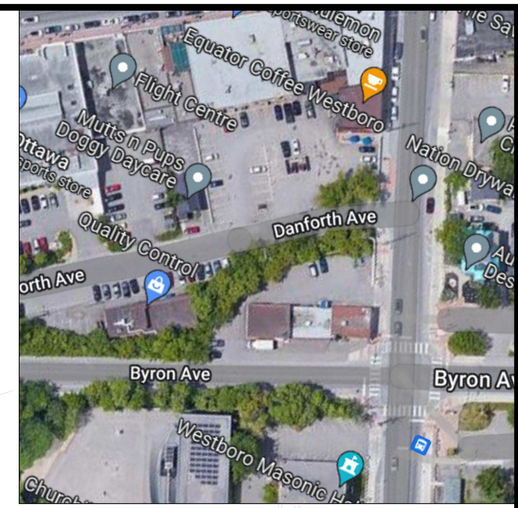

BENCHMARK FIRE HYDRANT
TOP OF SPINDLE = 70.07m

DANFORTH AVENUE

PROPOSED 7 STOREY
MULTI-UNIT BUILDING
GROUND FLOOR F.F.E = 75.92m
P1 F.F.E = 69.30m
P2 F.F.E = 72.50m

PROPOSED STEPPED RETAINING PLANTER WALLS, REFER TO STRUCTURAL DRAWINGS. INSTALL GAURD RAILS WHERE HEIGHTS EXCEEDS 0.6m

TERRACE LOCATED ON LEVEL 2 (AMENITIES FLOOR - NOT ON GROUND LEVEL). REFER TO ARCH DRAWINGS. DRAINAGE TO BE ACCOMMODATED INTERNALLY VIA THE BUILDING MECHANICAL SYSTEM. *OUT OF CIVIL SCOPE

WASTE ENTRY
EXIT
CAR ENTRY
PRINCIPAL ENTRY 1
PRINCIPAL ENTRY 2

CHURCHILL AVENUE NORTH (FORMERLY MAIN STREET AND 30)

BYRON AVENUE

USE AND INTERPRETATION OF DRAWINGS

GENERAL CONDITIONS OF THE CONTRACT FOR CONSTRUCTION ARE PART OF THE CONTRACT DOCUMENTS AND DESCRIBE USE AND INTENT OF THE DRAWING. THE CONTRACT DOCUMENTS INCLUDE NOT ONLY THE DRAWINGS, BUT ALSO THE OWNER-CONTRACTOR AGREEMENTS, CONDITIONS OF THE CONTRACT, THE SPECIFICATIONS, ADDENDA, AND MODIFICATIONS ISSUED AFTER EXECUTION OF THE CONTRACT. THESE CONTRACT DOCUMENTS ARE COMPLEMENTARY, AND WHAT IS REQUIRED BY ANY ONE SHALL BE BINDING AS IF REQUIRED BY ALL. WORK NOT COMPLETELY DELINEATED HEREON SHALL BE CONSTRUCTED OF THE SAME MATERIALS AND DETAILED SIMILARLY AS WORK SHOWN MORE COMPLETELY ELSEWHERE IN THE CONTRACT DOCUMENTS.

BY USE OF THE DRAWINGS FOR CONSTRUCTION OF THE PROJECT, THE OWNER CONFIRMS THAT HE HAS REVIEWED AND APPROVED THE DRAWINGS. THE CONTRACTOR CONFIRMS THAT HE HAS VISITED THE SITE, FAMILIARIZED HIMSELF WITH THE LOCAL CONDITIONS, VERIFIED FIELD DIMENSIONS AND CORRELATED HIS OBSERVATIONS WITH THE REQUIREMENTS OF THE CONTRACT DOCUMENTS.

AS INSTRUMENTS OF SERVICE, ALL DRAWINGS, SPECIFICATIONS, CADD FILES OR OTHER ELECTRONIC MEDIA AND COPIED THERE OF FURNISHED BY THE ENGINEER ARE HIS PROPERTY. THEY ARE TO BE USED ONLY FOR THIS PROJECT AND ARE NOT TO BE USED ON ANY OTHER PROJECT, INCLUDING REPEATS OF THE PROJECT. CHANGES TO THE DRAWINGS MAY ONLY BE MADE BY THE ENGINEER.

UNLESS THE REVISION TITLE IS "ISSUED FOR CONSTRUCTION", THESE DRAWINGS SHALL BE CONSIDERED PRELIMINARY AND SHALL NOT BE USED AS A CONSTRUCTION DOCUMENT.

THESE DRAWINGS ILLUSTRATES THE WORK TO BE DONE. THE ENGINEER IS NOT RESPONSIBLE FOR THE MEANS, METHODS, TECHNIQUES, SEQUENCES, AND PROCEDURES USED TO DO THE WORK, OR THE SAFETY ASPECTS OF CONSTRUCTION, AND NOTHING ON THESE DRAWINGS EXPRESSED OR IMPLIED CHANGES THIS CONDITION. CONTRACTOR SHALL DETERMINE ALL CONDITIONS AT THE SITE AND SHALL BE RESPONSIBLE FOR KNOWING HOW THEY AFFECT THE WORK. SUBMITTAL OF A BID TO PERFORM THIS WORK IS ACKNOWLEDGEMENT OF THE RESPONSIBILITIES, AND THAT THEY HAVE BEEN FULLY CONSIDERED IN PLANNING OF THE WORK, AND THE BID PRICE. NO CLAIMS FOR EXTRA CHARGES DUE TO THESE CONDITIONS WILL BE FORTHCOMING.

UNAUTHORIZED CHANGES:

IN THE EVENT THE CLIENT, THE CLIENT'S CONTRACTORS OR SUBCONTRACTORS, OR ANYONE FOR WHOM THE CLIENT IS LEGALLY LIABLE MAKES OR PERMITS TO BE MADE ANY CHANGES TO ANY REPORTS, PLANS, SPECIFICATIONS OR OTHER CONSTRUCTION DOCUMENTS PREPARED BY LRL ASSOCIATES LTD. (LRL) WITHOUT OBTAINING LRL'S PRIOR WRITTEN CONSENT, THE CLIENT SHALL ASSUME FULL RESPONSIBILITY FOR THE RESULTS OF SUCH CHANGES, THEREFORE THE CLIENT AGREES TO WAIVE ANY CLAIM AGAINST LRL AND TO RELEASE LRL FROM ANY LIABILITY ARISING DIRECTLY OR INDIRECTLY FROM SUCH UNAUTHORIZED CHANGES.

IN ADDITION, THE CLIENT AGREES, TO THE FULLEST EXTENT PERMITTED BY LAW, TO INDEMNIFY AND HOLD HARMLESS LRL FROM ANY DAMAGES, LIABILITIES OR COST, INCLUDING REASONABLE ATTORNEY'S FEES AND COST OF DEFENSE, ARISING FROM SUCH CHANGES.

IN ADDITION, THE CLIENT AGREES TO INCLUDE IN ANY CONTRACTS FOR CONSTRUCTION APPROPRIATE LANGUAGE THAT PROHIBITS THE CONTRACTOR OR ANY SUBCONTRACTORS OF ANY TIER FROM MAKING ANY CHANGES OR MODIFICATIONS TO LRL'S CONSTRUCTION DOCUMENTS WITHOUT THE PRIOR WRITTEN APPROVAL OF LRL AND THAT FURTHER REQUIRES THE CONTRACTOR TO INDEMNIFY BOTH LRL AND THE CLIENT FROM ANY LIABILITY OR COST ARISING FROM SUCH CHANGES MADE WITHOUT SUCH PROPER AUTHORIZATION.

GENERAL NOTES:

EXISTING SERVICES AND UTILITIES SHOWN ON THESE DRAWINGS ARE TAKEN FROM THE BEST AVAILABLE RECORDS, BUT MAY NOT BE COMPLETE OR TO DATE. CONTRACTOR SHALL VERIFY IN FIELD FOR LOCATION AND ELEVATION OF PIPES AND CHECK WITH THE UTILITY COMPANIES BEFORE DIGGING OR PERFORMING WORK.

CONTRACTOR IS ADVISED TO COLLECT INFORMATION ON SOIL CONDITIONS BEFORE START OF CONSTRUCTION.

THE ENGINEER WAIVES ANY AND ALL RESPONSIBILITY AND LIABILITY FOR PROBLEMS WHICH ARISE FROM FAILURE TO FOLLOW THESE PLANS, SPECIFICATIONS AND THE DESIGN INTENT THEY CONVEY, OR FOR PROBLEMS WHICH ARISE FROM OTHERS' FAILURE TO OBTAIN AND/OR FOLLOW THE ENGINEER'S GUIDANCE WITH RESPECT TO ANY ERRORS, OMISSIONS, INCONSISTENCIES AMBIGUITIES OR CONFLICTS WHICH ARE ALLEGED.

CONTRACTOR TO VERIFY ALL DIMENSIONS AND NOTIFY THE ENGINEER OF ANY DISCREPANCIES BEFORE WORK COMMENCES. DO NOT SCALE DRAWINGS.

1.5m 0 3.0 6.0m
SCALE: 1:125

NOT FOR CONSTRUCTION TENDER OR PERMIT

No.	REVISIONS	BY	DATE
01	ISSUED FOR APPROVAL	T.H.	11 OCT 2022

LICENSED PROFESSIONAL ENGINEER
M. BASNET
100501996
2022/10/11
PROVINCE OF ONTARIO
NOT AUTHENTIC UNLESS SIGNED AND DATED

LRL
ENGINEERING | INGÉNIERIE
5430 Canotek Road | Ottawa, ON, K1J 9G2
www.lrl.ca | (613) 842-3434

CLIENT
GSI PROPERTIES

DESIGNED BY:	DRAWN BY:	APPROVED BY:
A.S.	A.O.	V.J.

PROJECT
PROPOSED 7-STOREY CONDO
RE-DEVELOPMENT
424 CHURCHILL AVE
OTTAWA, ON

DRAWING TITLE
GRADING AND DRAINAGE PLAN

PROJECT NO.
220224
DATE
AUGUST, 2022

C301

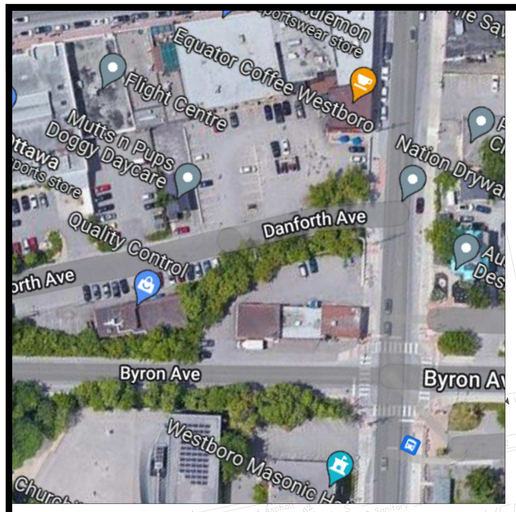

PROP CONNECTION TO 150mm WATERMAIN BY CITY FORCES
EXCAVATION AND REINSTATEMENT BY CONTRACTOR

BENCHMARK FIRE HYDRANT
TOP OF SPINDLE = 70.07m

EX 225mmØ SAN @ 0.46%

DANFORTH AVENUE

EX 150mmØ WTM

WTR

PROP CONNECTION TO 400mm WATERMAIN BY CITY FORCES
EXCAVATION AND REINSTATEMENT BY CONTRACTOR

48.21 EX 300mmØ CONC STM @ 5.39%

47.78m - EX 300mmØ CONC SAN @ 5.86%

EX 400mmØ WM

PROP WTR 150mmØ - 12.59m PVC DR-18
T/O WTR @ BLDG = 69.09m
T/O WTR TO BE MIN 2.4m BELOW GRADE

EX 375mmØ STM @ 0.4%

PIPE CROSSING 1
EX SAN OBV = ±69.15
PROP WTR INV = ±71.45
MIN CLEARANCE PROVIDED = 2.3m
AS PER CITY STD W25.2

PIPE CROSSING 2
EX STM OBV = ±70.74
PROP WTR INV = ±71.45
MIN CLEARANCE PROVIDED = 0.71m
AS PER CITY STD W25.2

WTR WTR WTR
STM STM STM
SAN SAN SAN

PROP WTR 150mmØ - 14.5m
PVC DR-18
T/O WTR @ BLDG = 71.49
T/O WTR TO BE MIN 2.4m BELOW GRADE

PROP STM 250mmØ - 11.6m
PVC DR-35 @ 2.0%
INV @ BLDG = 71.11

PROP SAN 150mmØ - 13.1m
PVC DR-35 @ 2.0%
INV @ BLDG = 69.73
C/W BACKFLOW PREVENTION
DEVICE AS PER CITY STD S14.2

PIPE CROSSING 3
EX STM INV = ±70.90
PROP SAN OBV = 69.65
MIN CLEARANCE PROVIDED = 1.25m

PROP SAN MH01
EX N INV = ± 69.32
EX S INV = ± 69.32
PROP INV = 69.47

PROP STM MH01
EX N INV = ± 70.83
EX S INV = ± 70.83
PROP INV = 70.88

CAR ENTRY
EXIT
WASTE ENTRY
WASTE ENTRY
PRINCIPAL ENTRY 2
UP
UP
UP EXIT
PRINCIPAL ENTRY 1

PROPOSED 7 STOREY
MULTI-UNIT BUILDING
GROUND FLOOR F.F.E = 75.92m
P1 F.F.E = 69.30m
P2 F.F.E = 72.50m

CHURCHILL AVENUE

BYRON AVENUE

LEGEND:

- EXISTING PROPERTY LINE TO REMAIN
- PROPOSED CURB
- PROPOSED SILT FENCE AS PER OPSD 219.110
- PROPOSED DOOR ENTRANCE/EXIT
- PROPOSED GRASS AREA (100mm TOP SOIL & SOD)
- PROPOSED CONCRETE FEATURES/SLAB
- PROPOSED HEAVY DUTY ASPHALT
- PROPOSED LIGHT DUTY ASPHALT
- ×50.00 PROPOSED ELEVATION
- ×50.00HP PROPOSED HIGH POINT ELEVATION
- ×50.00S PROPOSED SWALE ELEVATION
- ×50.00BC PROPOSED BOTTOM OF CURB / ASPHALT ELEVATION
- ×50.00TC PROPOSED TOP OF CURB ELEVATION
- ×50.00BW PROPOSED EXPOSED BOTTOM OF RETAINING WALL
- ×50.00TW PROPOSED TOP OF RETAINING WALL
- ×50.00EX MATCH INTO EXISTING ELEVATION
- ×50.00EX BC MATCH INTO EXISTING BOTTOM OF CURB
- ×50.00EX TC MATCH INTO EXISTING TOP OF CURB
- ×50.00TPW PROPOSED TOP OF PLANTER WALL
- PROPOSED OVERLAND MAJOR FLOW ROUTE
- STM STM PROPOSED STORM SEWER
- SAN SAN PROPOSED SANITARY SEWER
- WTR WTR PROPOSED WATERMAIN
- STM STM EXISTING STORM SEWER
- SAN SAN EXISTING SANITARY SEWER
- WTR WTR EXISTING WATERMAIN
- EXISTING MANHOLE
- EXISTING CATCHBASIN
- PROPOSED CATCHBASIN-MANHOLE/CATCHBASIN
- PROPOSED MANHOLE
- PROPOSED CURB STOP
- PROPOSED ROOF DRAIN
- PROPOSED 100 YEAR HIGH WATER LEVEL
- STORM WATERSHED EXTENT
- WS-XX CONTROLLED AREA / RUNOFF — WATERSHED NAME; RUNOFF COEFFICIENT; AREA IN HECTARES

USE AND INTERPRETATION OF DRAWINGS

GENERAL CONDITIONS OF THE CONTRACT FOR CONSTRUCTION ARE PART OF THE CONTRACT DOCUMENTS AND DESCRIBE USE AND INTENT OF THE DRAWING. THE CONTRACT DOCUMENTS INCLUDE NOT ONLY THE DRAWINGS, BUT ALSO THE OWNER-CONTRACTOR AGREEMENTS, CONDITIONS OF THE CONTRACT, THE SPECIFICATIONS, ADDENDA, AND MODIFICATIONS ISSUED AFTER EXECUTION OF THE CONTRACT. THESE CONTRACT DOCUMENTS ARE COMPLEMENTARY, AND WHAT IS REQUIRED BY ANY ONE SHALL BE BINDING AS IF REQUIRED BY ALL. WORK NOT COMPLETELY DELINEATED HEREON SHALL BE CONSTRUCTED OF THE SAME MATERIALS AND DETAILED SIMILARLY AS WORK SHOWN MORE COMPLETELY ELSEWHERE IN THE CONTRACT DOCUMENTS.

BY USE OF THE DRAWINGS FOR CONSTRUCTION OF THE PROJECT, THE OWNER CONFIRMS THAT HE HAS REVIEWED AND APPROVED THE DRAWINGS. THE CONTRACTOR CONFIRMS THAT HE HAS VISITED THE SITE, FAMILIARIZED HIMSELF WITH THE LOCAL CONDITIONS, VERIFIED FIELD DIMENSIONS AND CORRELATED HIS OBSERVATIONS WITH THE REQUIREMENTS OF THE CONTRACT DOCUMENTS.

AS INSTRUMENTS OF SERVICE, ALL DRAWINGS, SPECIFICATIONS, CADD FILES OR OTHER ELECTRONIC MEDIA AND COPIED THERE OF FURNISHED BY THE ENGINEER ARE HIS PROPERTY. THEY ARE TO BE USED ONLY FOR THIS PROJECT AND ARE NOT TO BE USED ON ANY OTHER PROJECT, INCLUDING REPEATS OF THE PROJECT. CHANGES TO THE DRAWINGS MAY ONLY BE MADE BY THE ENGINEER.

UNLESS THE REVISION TITLE IS "ISSUED FOR CONSTRUCTION", THESE DRAWINGS SHALL BE CONSIDERED PRELIMINARY AND SHALL NOT BE USED AS A CONSTRUCTION DOCUMENT.

THESE DRAWINGS ILLUSTRATES THE WORK TO BE DONE. THE ENGINEER IS NOT RESPONSIBLE FOR THE MEANS, METHODS, TECHNIQUES, SEQUENCES, AND PROCEDURES USED TO DO THE WORK, OR THE SAFETY ASPECTS OF CONSTRUCTION, AND NOTHING ON THESE DRAWINGS EXPRESSED OR IMPLIED CHANGES THIS CONDITION. CONTRACTOR SHALL DETERMINE ALL CONDITIONS AT THE SITE AND SHALL BE RESPONSIBLE FOR KNOWING HOW THEY AFFECT THE WORK. SUBMITTAL OF A BID TO PERFORM THIS WORK IS ACKNOWLEDGEMENT OF THE RESPONSIBILITIES, AND THAT THEY HAVE BEEN FULLY CONSIDERED IN PLANNING OF THE WORK, AND THE BID PRICE. NO CLAIMS FOR EXTRA CHARGES DUE TO THESE CONDITIONS WILL BE FORTHCOMING.

UNAUTHORIZED CHANGES:

IN THE EVENT THE CLIENT, THE CLIENT'S CONTRACTORS OR SUBCONTRACTORS, OR ANYONE FOR WHOM THE CLIENT IS LEGALLY LIABLE MAKES OR PERMITS TO BE MADE ANY CHANGES TO ANY REPORTS, PLANS, SPECIFICATIONS OR OTHER CONSTRUCTION DOCUMENTS PREPARED BY LRL ASSOCIATES LTD. (LRL) WITHOUT OBTAINING LRL'S PRIOR WRITTEN CONSENT, THE CLIENT SHALL ASSUME FULL RESPONSIBILITY FOR THE RESULTS OF SUCH CHANGES, THEREFORE THE CLIENT AGREES TO WAIVE ANY CLAIM AGAINST LRL AND TO RELEASE LRL FROM ANY LIABILITY ARISING DIRECTLY OR INDIRECTLY FROM SUCH UNAUTHORIZED CHANGES.

IN ADDITION, THE CLIENT AGREES, TO THE FULLEST EXTENT PERMITTED BY LAW, TO INDEMNIFY AND HOLD HARMLESS LRL FROM ANY DAMAGES, LIABILITIES OR COST, INCLUDING REASONABLE ATTORNEY'S FEES AND COST OF DEFENSE, ARISING FROM SUCH CHANGES.

IN ADDITION, THE CLIENT AGREES TO INCLUDE IN ANY CONTRACTS FOR CONSTRUCTION APPROPRIATE LANGUAGE THAT PROHIBITS THE CONTRACTOR OR ANY SUBCONTRACTORS OF ANY TIER FROM MAKING ANY CHANGES OR MODIFICATIONS TO LRL'S CONSTRUCTION DOCUMENTS WITHOUT THE PRIOR WRITTEN APPROVAL OF LRL AND THAT FURTHER REQUIRES THE CONTRACTOR TO INDEMNIFY BOTH LRL AND THE CLIENT FROM ANY LIABILITY OR COST ARISING FROM SUCH CHANGES MADE WITHOUT SUCH PROPER AUTHORIZATION.

GENERAL NOTES:

EXISTING SERVICES AND UTILITIES SHOWN ON THESE DRAWINGS ARE TAKEN FROM THE BEST AVAILABLE RECORDS, BUT MAY NOT BE COMPLETE OR TO DATE. CONTRACTOR SHALL VERIFY IN FIELD FOR LOCATION AND ELEVATION OF PIPES AND CHECK WITH THE UTILITY COMPANIES BEFORE DIGGING OR PERFORMING WORK.

CONTRACTOR IS ADVISED TO COLLECT INFORMATION ON SOIL CONDITIONS BEFORE START OF CONSTRUCTION.

THE ENGINEER WAIVES ANY AND ALL RESPONSIBILITY AND LIABILITY FOR PROBLEMS WHICH ARISE FROM FAILURE TO FOLLOW THESE PLANS, SPECIFICATIONS AND THE DESIGN INTENT THEY CONVEY, OR FOR PROBLEMS WHICH ARISE FROM OTHERS' FAILURE TO OBTAIN AND/OR FOLLOW THE ENGINEER'S GUIDANCE WITH RESPECT TO ANY ERRORS, OMISSIONS, INCONSISTENCIES AMBIGUITIES OR CONFLICTS WHICH ARE ALLEGED.

CONTRACTOR TO VERIFY ALL DIMENSIONS AND NOTIFY THE ENGINEER OF ANY DISCREPANCIES BEFORE WORK COMMENCES. DO NOT SCALE DRAWINGS.

2m 0.5 0 2 4m

SCALE: 1:100

NOT FOR CONSTRUCTION TENDER OR PERMIT

No.	REVISIONS	BY	DATE
01	ISSUED FOR APPROVAL	T.H.	11 OCT 2022

LICENSED PROFESSIONAL ENGINEER
M. BASNET
100501996
2022/10/11
PROVINCE OF ONTARIO

NOT AUTHENTIC UNLESS SIGNED AND DATED

LRL
ENGINEERING | INGÉNIERIE
5430 Canotek Road I Ottawa, ON, K1J 9G2
www.lrl.ca I (613) 842-3434

CLIENT
GSI PROPERTIES

DESIGNED BY:	DRAWN BY:	APPROVED BY:
A.S.	A.O.	V.J.

PROJECT
PROPOSED 7-STOREY CONDO
RE-DEVELOPMENT
424 CHURCHILL AVE
OTTAWA, ON

DRAWING TITLE
SERVICING PLAN

PROJECT NO.
220224

DATE
AUGUST, 2022

C401

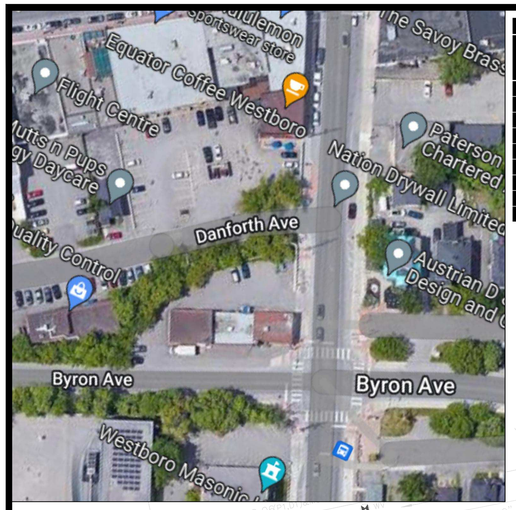

SUMMARY OF RELEASE RATES AND STORAGE VOLUMES				
CATCHMENT AREAS	DRAINAGE AREAS (ha)	100-YEAR RELEASE RATE	100-YEAR REQUIRED STORAGE (m3)	TOTAL AVAILABLE STORAGE (m3)
WS-01(ROOF)	0.012	1.26	3.15	6.03
WS-02 (ROOF)	0.014	1.26	3.46	4.55
WS-03 (ROOF)	0.025	1.26	6.63	12.25
WS-04 (ROOF)	0.006	1.26	3.15	3.16
WS-05 (ROOF)	0.013	1.26	3.15	6.64
TOTAL CONTROLLED	**0.070**	**6.30**	**19.53**	**32.63**
WS-06 (UNCONTROLLED)	0.031	15.59	0	0
TOTAL UNCONTROLLED	**0.031**	**15.59**	**0.00**	**0.00**
TOTAL	**0.101**	**21.89**	**19.53**	**32.63**

STORAGE VOLUME 2
ASSOCIATED WITH WS-02(ROOF)
MAXIMUM PONDING EXTENTS
AVAILABLE SURFACE VOLUME = 4.55m³
PROPOSED ROOF DRAINS: WATTS ADJUSTABLE
ACCUTROL RD-100-A1, CLOSED WEIR OPENING
FLOW PER DRAIN = 0.63L/s
TOTAL FLOW (2 ROOF DRAINS)= 1.26L/s
MAX PONDING DEPTH = 0.15m
ROOF DRAIN TO OUTLET TO 250mm PVC STORM SEWER

BENCHMARK FIRE HYDRANT
TOP OF SPINDLE = 70.07m

DANFORTH AVENUE

STORAGE VOLUME 3
ASSOCIATED WITH WS-03(ROOF)
MAXIMUM PONDING EXTENTS
AVAILABLE SURFACE VOLUME = 12.25m³
PROPOSED ROOF DRAINS: WATTS ADJUSTABLE
ACCUTROL RD-100-A1, CLOSED WEIR OPENING
FLOW PER DRAIN = 0.63L/s
TOTAL FLOW (2 ROOF DRAINS)=1.26L/s
MAX PONDING DEPTH = 0.15m
ROOF DRAIN TO OUTLET TO 250mm PVC STORM SEWER

CAR ENTRY
EXIT
WASTE ENTRY
STE ENTRY

RD1
RD2
RD3
RD4
RD5
RD6
RD7
RD8
RD9
RD10

PROPOSED
8-STOREY MULTI-UNIT
(+ 2 PARKING LVLS.)
APARTMENT BUILDING
FFE = 75.9 m GROUND FLOOR
AVERAGE GRADE 73.10

8 STOREY
8 STOREY
MECHANICAL PENTHOUSE

PRINCIPAL ENTRY 2
UP
UP
LANDS.

CHURCHILL AVENUE

TERRACE LOCATED ON LEVEL 2 (AMENITIES FLOOR - NOT ON GROUND LEVEL). REFER TO ARCH DRAWINGS. DRAINAGE TO BE ACCOMMODATED INTERNALLY VIA THE BUILDING MECHANICAL SYSTEM.
*OUT OF CIVIL SCOPE

STORAGE VOLUME 5
ASSOCIATED WITH WS-05(ROOF)
MAXIMUM PONDING EXTENTS
AVAILABLE SURFACE VOLUME = 6.64m³
PROPOSED ROOF DRAINS: WATTS ADJUSTABLE
ACCUTROL RD-100-A1, CLOSED WEIR OPENING
FLOW PER DRAIN = 0.63L/s
TOTAL FLOW (2 ROOF DRAINS)= 1.26L/s
MAX PONDING DEPTH = 0.15m
ROOF DRAIN TO OUTLET TO 250mm PVC STORM SEWER

STORAGE VOLUME 4
ASSOCIATED WITH WS-04(ROOF)
MAXIMUM PONDING EXTENTS
AVAILABLE SURFACE VOLUME = 3.16m³
PROPOSED ROOF DRAINS: WATTS ADJUSTABLE
ACCUTROL RD-100-A1, CLOSE WEIR OPENING
FLOW PER DRAIN = 0.63L/s
TOTAL FLOW (2 ROOF DRAINS)= 1.26L/s
MAX PONDING DEPTH = 0.15m
ROOF DRAIN TO OUTLET TO 250mm PVC STORM SEWER

STORAGE VOLUME 1
ASSOCIATED WITH WS-01(ROOF)
MAXIMUM PONDING EXTENTS
AVAILABLE SURFACE VOLUME = 6.03m³
PROPOSED ROOF DRAINS: WATTS ADJUSTABLE
ACCUTROL RD-100-A1, CLOSED WEIR OPENING
FLOW PER DRAIN = 0.63L/s
TOTAL FLOW (2 ROOF DRAINS)= 1.26L/s
MAX PONDING DEPTH = 0.15m
ROOF DRAIN TO OUTLET TO 250mm PVC STORM SEWER

BYRON AVENUE

LEGEND:

- EXISTING PROPERTY LINE TO REMAIN
- PROPOSED CURB
- PROPOSED SILT FENCE AS PER OPSD 219.110
- PROPOSED DOOR ENTRANCE/EXIT
- PROPOSED GRASS AREA (100mm TOP SOIL & SOD)
- PROPOSED CONCRETE FEATURES/SLAB
- PROPOSED HEAVY DUTY ASPHALT
- PROPOSED LIGHT DUTY ASPHALT
- ×50.00 PROPOSED ELEVATION
- ×50.00HP PROPOSED HIGH POINT ELEVATION
- ×50.00S PROPOSED SWALE ELEVATION
- ×50.00BC PROPOSED BOTTOM OF CURB / ASPHALT ELEVATION
- ×50.00TC PROPOSED TOP OF CURB ELEVATION
- ×50.00BW PROPOSED EXPOSED BOTTOM OF RETAINING WALL
- ×50.00TW PROPOSED TOP OF RETAINING WALL
- ×50.00EX MATCH INTO EXISTING ELEVATION
- ×50.00EX BC MATCH INTO EXISTING BOTTOM OF CURB
- ×50.00EX TC MATCH INTO EXISTING TOP OF CURB
- ×50.00TPW PROPOSED TOP OF PLANTER WALL
- PROPOSED OVERLAND MAJOR FLOW ROUTE
- STM STM PROPOSED STORM SEWER
- SAN SAN PROPOSED SANITARY SEWER
- WTR WTR PROPOSED WATERMAIN
- STM STM EXISTING STORM SEWER
- SAN SAN EXISTING SANITARY SEWER
- WTR WTR EXISTING WATERMAIN
- EXISTING MANHOLE
- EXISTING CATCHBASIN
- PROPOSED CATCHBASIN-MANHOLE/CATCHBASIN
- PROPOSED MANHOLE
- PROPOSED CURB STOP
- PROPOSED ROOF DRAIN
- PROPOSED 100 YEAR HIGH WATER LEVEL
- STORM WATERSHED EXTENT

WS-XX
CONTROLLED
AREA RUNOFF
- WATERSHED NAME
- RUNOFF COEFFICIENT
- AREA IN HECTARES

USE AND INTERPRETATION OF DRAWINGS

GENERAL CONDITIONS OF THE CONTRACT FOR CONSTRUCTION ARE PART OF THE CONTRACT DOCUMENTS AND DESCRIBE USE AND INTENT OF THE DRAWING. THE CONTRACT DOCUMENTS INCLUDE NOT ONLY THE DRAWINGS, BUT ALSO THE OWNER-CONTRACTOR AGREEMENTS, CONDITIONS OF THE CONTRACT, THE SPECIFICATIONS, ADDENDA, AND MODIFICATIONS ISSUED AFTER EXECUTION OF THE CONTRACT. THESE CONTRACT DOCUMENTS ARE COMPLEMENTARY, AND WHAT IS REQUIRED BY ANY ONE SHALL BE BINDING AS IF REQUIRED BY ALL. WORK NOT COMPLETELY DELINEATED HEREON SHALL BE CONSTRUCTED OF THE SAME MATERIALS AND DETAILED SIMILARLY AS WORK SHOWN MORE COMPLETELY ELSEWHERE IN THE CONTRACT DOCUMENTS.

BY USE OF THE DRAWINGS FOR CONSTRUCTION OF THE PROJECT, THE OWNER CONFIRMS THAT HE HAS REVIEWED AND APPROVED THE DRAWINGS. THE CONTRACTOR CONFIRMS THAT HE HAS VISITED THE SITE, FAMILIARIZED HIMSELF WITH THE LOCAL CONDITIONS, VERIFIED FIELD DIMENSIONS AND CORRELATED HIS OBSERVATIONS WITH THE REQUIREMENTS OF THE CONTRACT DOCUMENTS.

AS INSTRUMENTS OF SERVICE, ALL DRAWINGS, SPECIFICATIONS, CADD FILES OR OTHER ELECTRONIC MEDIA AND COPIED THERE OF FURNISHED BY THE ENGINEER ARE HIS PROPERTY. THEY ARE TO BE USED ONLY FOR THIS PROJECT AND ARE NOT TO BE USED ON ANY OTHER PROJECT, INCLUDING REPEATS OF THE PROJECT. CHANGES TO THE DRAWINGS MAY ONLY BE MADE BY THE ENGINEER.

UNLESS THE REVISION TITLE IS "ISSUED FOR CONSTRUCTION", THESE DRAWINGS SHALL BE CONSIDERED PRELIMINARY AND SHALL NOT BE USED AS A CONSTRUCTION DOCUMENT.

THESE DRAWINGS ILLUSTRATES THE WORK TO BE DONE. THE ENGINEER IS NOT RESPONSIBLE FOR THE MEANS, METHODS, TECHNIQUES, SEQUENCES, AND PROCEDURES USED TO DO THE WORK, OR THE SAFETY ASPECTS OF CONSTRUCTION, AND NOTHING ON THESE DRAWINGS EXPRESSED OR IMPLIED CHANGES THIS CONDITION. CONTRACTOR SHALL DETERMINE ALL CONDITIONS AT THE SITE AND SHALL BE RESPONSIBLE FOR KNOWING HOW THEY AFFECT THE WORK. SUBMITTAL OF A BID TO PERFORM THIS WORK IS ACKNOWLEDGEMENT OF THE RESPONSIBILITIES, AND THAT THEY HAVE BEEN FULLY CONSIDERED IN PLANNING OF THE WORK, AND THE BID PRICE. NO CLAIMS FOR EXTRA CHARGES DUE TO THESE CONDITIONS WILL BE FORTHCOMING.

UNAUTHORIZED CHANGES:

IN THE EVENT THE CLIENT, THE CLIENT'S CONTRACTORS OR SUBCONTRACTORS, OR ANYONE FOR WHOM THE CLIENT IS LEGALLY LIABLE MAKES OR PERMITS TO BE MADE ANY CHANGES TO ANY REPORTS, PLANS, SPECIFICATIONS OR OTHER CONSTRUCTION DOCUMENTS PREPARED BY LRL ASSOCIATES LTD. (LRL) WITHOUT OBTAINING LRL'S PRIOR WRITTEN CONSENT, THE CLIENT SHALL ASSUME FULL RESPONSIBILITY FOR THE RESULTS OF SUCH CHANGES, THEREFORE THE CLIENT AGREES TO WAIVE ANY CLAIM AGAINST LRL AND TO RELEASE LRL FROM ANY LIABILITY ARISING DIRECTLY OR INDIRECTLY FROM SUCH UNAUTHORIZED CHANGES.

IN ADDITION, THE CLIENT AGREES, TO THE FULLEST EXTENT PERMITTED BY LAW, TO INDEMNIFY AND HOLD HARMLESS LRL FROM ANY DAMAGES, LIABILITIES OR COST, INCLUDING REASONABLE ATTORNEY'S FEES AND COST OF DEFENSE, ARISING FROM SUCH CHANGES.

IN ADDITION, THE CLIENT AGREES TO INCLUDE IN ANY CONTRACTS FOR CONSTRUCTION APPROPRIATE LANGUAGE THAT PROHIBITS THE CONTRACTOR OR ANY SUBCONTRACTORS OF ANY TIER FROM MAKING ANY CHANGES OR MODIFICATIONS TO LRL'S CONSTRUCTION DOCUMENTS WITHOUT THE PRIOR WRITTEN APPROVAL OF LRL AND THAT FURTHER REQUIRES THE CONTRACTOR TO INDEMNIFY BOTH LRL AND THE CLIENT FROM ANY LIABILITY OR COST ARISING FROM SUCH CHANGES MADE WITHOUT SUCH PROPER AUTHORIZATION.

GENERAL NOTES:

EXISTING SERVICES AND UTILITIES SHOWN ON THESE DRAWINGS ARE TAKEN FROM THE BEST AVAILABLE RECORDS, BUT MAY NOT BE COMPLETE OR TO DATE. CONTRACTOR SHALL VERIFY IN FIELD FOR LOCATION AND ELEVATION OF PIPES AND CHECK WITH THE UTILITY COMPANIES BEFORE DIGGING OR PERFORMING WORK.

CONTRACTOR IS ADVISED TO COLLECT INFORMATION ON SOIL CONDITIONS BEFORE START OF CONSTRUCTION.

THE ENGINEER WAIVES ANY AND ALL RESPONSIBILITY AND LIABILITY FOR PROBLEMS WHICH ARISE FROM FAILURE TO FOLLOW THESE PLANS, SPECIFICATIONS AND THE DESIGN INTENT THEY CONVEY, OR FOR PROBLEMS WHICH ARISE FROM OTHERS' FAILURE TO OBTAIN AND/OR FOLLOW THE ENGINEER'S GUIDANCE WITH RESPECT TO ANY ERRORS, OMISSIONS, INCONSISTENCIES AMBIGUITIES OR CONFLICTS WHICH ARE ALLEGED.

CONTRACTOR TO VERIFY ALL DIMENSIONS AND NOTIFY THE ENGINEER OF ANY DISCREPANCIES BEFORE WORK COMMENCES. DO NOT SCALE DRAWINGS.

1.5m 0 3.0 6.0m
SCALE: 1:125

NOT FOR CONSTRUCTION TENDER OR PERMIT

No.	REVISIONS	BY	DATE
01	ISSUED FOR APPROVAL	T.H.	11 OCT 2022

LICENSED PROFESSIONAL ENGINEER
M. BASNET
100501996
2022/10/11
PROVINCE OF ONTARIO
NOT AUTHENTIC UNLESS SIGNED AND DATED

LRL
ENGINEERING | INGÉNIERIE
5430 Canotek Road I Ottawa, ON, K1J 9G2
www.lrl.ca I (613) 842-3434

CLIENT
GSI PROPERTIES

DESIGNED BY:	DRAWN BY:	APPROVED BY:
A.S.	A.O.	V.J.

PROJECT
PROPOSED 7-STOREY CONDO
RE-DEVELOPMENT
424 CHURCHILL AVE
OTTAWA, ON

DRAWING TITLE
STORMWATER MANAGEMENT PLAN

PROJECT NO.
220224

DATE
AUGUST, 2022

C601

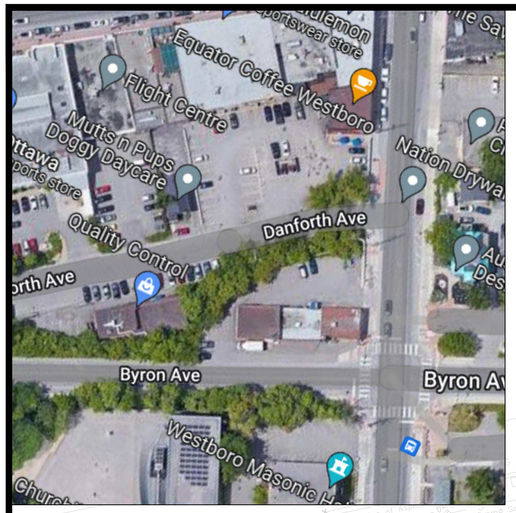

BENCHMARK FIRE HYDRANT
TOP OF SPINDLE = 70.07m

DANFORTH AVENUE

EWS-01
UN-CONTROLLED
0.101 | 0.82

CHURCHILL AVENUE

BYRON AVENUE

LEGEND:

- EXISTING PROPERTY LINE TO REMAIN
- PROPOSED CURB
- PROPOSED SILT FENCE AS PER OPSD 219.110
- PROPOSED DOOR ENTRANCE/EXIT
- PROPOSED GRASS AREA (100mm TOP SOIL & SOD)
- PROPOSED CONCRETE FEATURES/SLAB
- PROPOSED HEAVY DUTY ASPHALT
- PROPOSED LIGHT DUTY ASPHALT
- ×50.00 PROPOSED ELEVATION
- ×50.00HP PROPOSED HIGH POINT ELEVATION
- ×50.00S PROPOSED SWALE ELEVATION
- ×50.00BC PROPOSED BOTTOM OF CURB / ASPHALT ELEVATION
- ×50.00TC PROPOSED TOP OF CURB ELEVATION
- ×50.00BW PROPOSED EXPOSED BOTTOM OF RETAINING WALL
- ×50.00TW PROPOSED TOP OF RETAINING WALL
- ×50.00EX MATCH INTO EXISTING ELEVATION
- ×50.00EX BC MATCH INTO EXISTING BOTTOM OF CURB
- ×50.00EX TC MATCH INTO EXISTING TOP OF CURB
- ×50.00TPW PROPOSED TOP OF PLANTER WALL
- PROPOSED OVERLAND MAJOR FLOW ROUTE
- STM STM PROPOSED STORM SEWER
- SAN SAN PROPOSED SANITARY SEWER
- WTR WTR PROPOSED WATERMAIN
- STM STM EXISTING STORM SEWER
- SAN SAN EXISTING SANITARY SEWER
- WTR WTR EXISTING WATERMAIN
- EXISTING MANHOLE
- EXISTING CATCHBASIN
- PROPOSED CATCHBASIN-MANHOLE/CATCHBASIN
- PROPOSED MANHOLE
- PROPOSED CURB STOP
- PROPOSED ROOF DRAIN
- PROPOSED 100 YEAR HIGH WATER LEVEL
- STORM WATERSHED EXTENT

WS-XX CONTROLLED | RUNOFF | AREA

- WATERSHED NAME
- RUNOFF COEFFICIENT
- AREA IN HECTARES

USE AND INTERPRETATION OF DRAWINGS

GENERAL CONDITIONS OF THE CONTRACT FOR CONSTRUCTION ARE PART OF THE CONTRACT DOCUMENTS AND DESCRIBE USE AND INTENT OF THE DRAWING. THE CONTRACT DOCUMENTS INCLUDE NOT ONLY THE DRAWINGS, BUT ALSO THE OWNER-CONTRACTOR AGREEMENTS, CONDITIONS OF THE CONTRACT, THE SPECIFICATIONS, ADDENDA, AND MODIFICATIONS ISSUED AFTER EXECUTION OF THE CONTRACT. THESE CONTRACT DOCUMENTS ARE COMPLEMENTARY, AND WHAT IS REQUIRED BY ANY ONE SHALL BE BINDING AS IF REQUIRED BY ALL. WORK NOT COMPLETELY DELINEATED HEREON SHALL BE CONSTRUCTED OF THE SAME MATERIALS AND DETAILED SIMILARLY AS WORK SHOWN MORE COMPLETELY ELSEWHERE IN THE CONTRACT DOCUMENTS.

BY USE OF THE DRAWINGS FOR CONSTRUCTION OF THE PROJECT, THE OWNER CONFIRMS THAT HE HAS REVIEWED AND APPROVED THE DRAWINGS. THE CONTRACTOR CONFIRMS THAT HE HAS VISITED THE SITE, FAMILIARIZED HIMSELF WITH THE LOCAL CONDITIONS, VERIFIED FIELD DIMENSIONS AND CORRELATED HIS OBSERVATIONS WITH THE REQUIREMENTS OF THE CONTRACT DOCUMENTS.

AS INSTRUMENTS OF SERVICE, ALL DRAWINGS, SPECIFICATIONS, CADD FILES OR OTHER ELECTRONIC MEDIA AND COPIED THERE OF FURNISHED BY THE ENGINEER ARE HIS PROPERTY. THEY ARE TO BE USED ONLY FOR THIS PROJECT AND ARE NOT TO BE USED ON ANY OTHER PROJECT, INCLUDING REPEATS OF THE PROJECT. CHANGES TO THE DRAWINGS MAY ONLY BE MADE BY THE ENGINEER.

UNLESS THE REVISION TITLE IS "ISSUED FOR CONSTRUCTION", THESE DRAWINGS SHALL BE CONSIDERED PRELIMINARY AND SHALL NOT BE USED AS A CONSTRUCTION DOCUMENT.

THESE DRAWINGS ILLUSTRATES THE WORK TO BE DONE. THE ENGINEER IS NOT RESPONSIBLE FOR THE MEANS, METHODS, TECHNIQUES, SEQUENCES, AND PROCEDURES USED TO DO THE WORK, OR THE SAFETY ASPECTS OF CONSTRUCTION, AND NOTHING ON THESE DRAWINGS EXPRESSED OR IMPLIED CHANGES THIS CONDITION. CONTRACTOR SHALL DETERMINE ALL CONDITIONS AT THE SITE AND SHALL BE RESPONSIBLE FOR KNOWING HOW THEY AFFECT THE WORK. SUBMITTAL OF A BID TO PERFORM THIS WORK IS ACKNOWLEDGEMENT OF THE RESPONSIBILITIES, AND THAT THEY HAVE BEEN FULLY CONSIDERED IN PLANNING OF THE WORK, AND THE BID PRICE. NO CLAIMS FOR EXTRA CHARGES DUE TO THESE CONDITIONS WILL BE FORTHCOMING.

UNAUTHORIZED CHANGES:

IN THE EVENT THE CLIENT, THE CLIENT'S CONTRACTORS OR SUBCONTRACTORS, OR ANYONE FOR WHOM THE CLIENT IS LEGALLY LIABLE MAKES OR PERMITS TO BE MADE ANY CHANGES TO ANY REPORTS, PLANS, SPECIFICATIONS OR OTHER CONSTRUCTION DOCUMENTS PREPARED BY LRL ASSOCIATES LTD. (LRL) WITHOUT OBTAINING LRL'S PRIOR WRITTEN CONSENT, THE CLIENT SHALL ASSUME FULL RESPONSIBILITY FOR THE RESULTS OF SUCH CHANGES, THEREFORE THE CLIENT AGREES TO WAIVE ANY CLAIM AGAINST LRL AND TO RELEASE LRL FROM ANY LIABILITY ARISING DIRECTLY OR INDIRECTLY FROM SUCH UNAUTHORIZED CHANGES.

IN ADDITION, THE CLIENT AGREES, TO THE FULLEST EXTENT PERMITTED BY LAW, TO INDEMNIFY AND HOLD HARMLESS LRL FROM ANY DAMAGES, LIABILITIES OR COST, INCLUDING REASONABLE ATTORNEY'S FEES AND COST OF DEFENSE, ARISING FROM SUCH CHANGES.

IN ADDITION, THE CLIENT AGREES TO INCLUDE IN ANY CONTRACTS FOR CONSTRUCTION APPROPRIATE LANGUAGE THAT PROHIBITS THE CONTRACTOR OR ANY SUBCONTRACTORS OF ANY TIER FROM MAKING ANY CHANGES OR MODIFICATIONS TO LRL'S CONSTRUCTION DOCUMENTS WITHOUT THE PRIOR WRITTEN APPROVAL OF LRL AND THAT FURTHER REQUIRES THE CONTRACTOR TO INDEMNIFY BOTH LRL AND THE CLIENT FROM ANY LIABILITY OR COST ARISING FROM SUCH CHANGES MADE WITHOUT SUCH PROPER AUTHORIZATION.

GENERAL NOTES:

EXISTING SERVICES AND UTILITIES SHOWN ON THESE DRAWINGS ARE TAKEN FROM THE BEST AVAILABE RECORDS, BUT MAY NOT BE COMPLETE OR TO DATE. CONTRACTOR SHALL VERIFY IN FIELD FOR LOCATION AND ELEVATION OF PIPES AND CHECK WITH THE UTILITY COMPANIES BEFORE DIGGING OR PERFORMING WORK.

CONTRACTOR IS ADVISED TO COLLECT INFORMATION ON SOIL CONDITIONS BEFORE START OF CONSTRUCTION.

THE ENGINEER WAIVES ANY AND ALL RESPONSIBILITY AND LIABILITY FOR PROBLEMS WHICH ARISE FROM FAILURE TO FOLLOW THESE PLANS, SPECIFICATIONS AND THE DESIGN INTENT THEY CONVEY, OR FOR PROBLEMS WHICH ARISE FROM OTHERS' FAILURE TO OBTAIN AND/OR FOLLOW THE ENGINEER'S GUIDANCE WITH RESPECT TO ANY ERRORS, OMISSIONS, INCONSISTENCIES AMBIGUITIES OR CONFLICTS WHICH ARE ALLEGED.

CONTRACTOR TO VERIFY ALL DIMENSIONS AND NOTIFY THE ENGINEER OF ANY DISCREPANCIES BEFORE WORK COMMENCES. DO NOT SCALE DRAWINGS.

1.5m 0 3.0 6.0m

SCALE: 1:125

NOT FOR CONSTRUCTION TENDER OR PERMIT

No.	REVISIONS	BY	DATE
01	ISSUED FOR APPROVAL	T.H.	11 OCT 2022

LICENSED PROFESSIONAL ENGINEER
M. BASNET
100501996
2022/10/11
PROVINCE OF ONTARIO

NOT AUTHENTIC UNLESS SIGNED AND DATED

LRL
ENGINEERING | INGÉNIERIE
5430 Canotek Road I Ottawa, ON, K1J 9G2
www.lrl.ca I (613) 842-3434

CLIENT
GSI PROPERTIES

DESIGNED BY:	DRAWN BY:	APPROVED BY:
A.S.	A.O.	V.J.

PROJECT
PROPOSED 7-STOREY CONDO
RE-DEVELOPMENT
424 CHURCHILL AVE
OTTAWA, ON

DRAWING TITLE
PRE-DEVELOPMENT
WATERSHED PLAN

PROJECT NO.
220224

DATE
AUGUST, 2022

C701

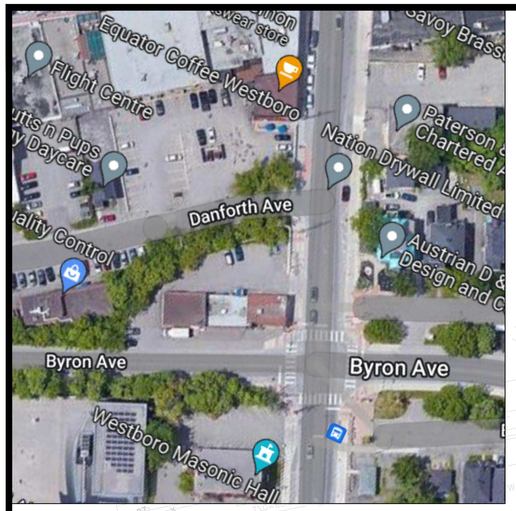

BENCHMARK FIRE HYDRANT
TOP OF SPINDLE = 70.07m

DANFORTH AVENUE

CAR ENTRY
EXIT
WASTE ENTRY
WASTE ENTRY

WS-02
CONTROLLED
0.014 | 0.9

WS-06
UN-CONTROLLED
0.031 | 0.9

WS-01
CONTROLLED
0.012 | 0.9

WS-05
CONTROLLED
0.013 | 0.9

WS-03
CONTROLLED
0.025 | 0.9

WS-04
CONTROLLED
0.006 | 0.9

PROPOSED
8-STOREY MULTI-UNIT
(+ 2 PARKING LVLS.)
APARTMENT BUILDING
FFE = 75.9 m GROUND FLOOR
AVERAGE GRADE 73.10

8 STOREY
8 STOREY
MECHANICAL PENTHOUSE

PRINCIPAL ENTRY 2
UP
UP
EXIT
PRINCIPAL ENTRY 1

TERRACE LOCATED ON LEVEL 2 (AMENITIES FLOOR - NOT ON GROUND LEVEL). REFER TO ARCH DRAWINGS. DRAINAGE TO BE ACCOMMODATED INTERNALLY VIA THE BUILDING MECHANICAL SYSTEM.
*OUT OF CIVIL SCOPE

BYRON AVENUE

CHURCHILL AVENUE

LEGEND:

- EXISTING PROPERTY LINE TO REMAIN
- PROPOSED CURB
- PROPOSED SILT FENCE AS PER OPSD 219.110
- PROPOSED DOOR ENTRANCE/EXIT
- PROPOSED GRASS AREA (100mm TOP SOIL & SOD)
- PROPOSED CONCRETE FEATURES/SLAB
- PROPOSED HEAVY DUTY ASPHALT
- PROPOSED LIGHT DUTY ASPHALT
- ×50.00 PROPOSED ELEVATION
- ×50.00HP PROPOSED HIGH POINT ELEVATION
- ×50.00S PROPOSED SWALE ELEVATION
- ×50.00BC PROPOSED BOTTOM OF CURB / ASPHALT ELEVATION
- ×50.00TC PROPOSED TOP OF CURB ELEVATION
- ×50.00BW PROPOSED EXPOSED BOTTOM OF RETAINING WALL
- ×50.00TW PROPOSED TOP OF RETAINING WALL
- ×50.00EX MATCH INTO EXISTING ELEVATION
- ×50.00EX BC MATCH INTO EXISTING BOTTOM OF CURB
- ×50.00EX TC MATCH INTO EXISTING TOP OF CURB
- ×50.00TPW PROPOSED TOP OF PLANTER WALL
- PROPOSED OVERLAND MAJOR FLOW ROUTE
- STM STM PROPOSED STORM SEWER
- SAN SAN PROPOSED SANITARY SEWER
- WTR WTR PROPOSED WATERMAIN
- STM STM EXISTING STORM SEWER
- SAN SAN EXISTING SANITARY SEWER
- WTR WTR EXISTING WATERMAIN
- EXISTING MANHOLE
- EXISTING CATCHBASIN
- PROPOSED CATCHBASIN-MANHOLE/CATCHBASIN
- PROPOSED MANHOLE
- PROPOSED CURB STOP
- PROPOSED ROOF DRAIN
- PROPOSED 100 YEAR HIGH WATER LEVEL
- STORM WATERSHED EXTENT

WS-XX (CONTROLLED / UN-CONTROLLED) | AREA | RUNOFF
- WATERSHED NAME
- RUNOFF COEFFICIENT
- AREA IN HECTARES

USE AND INTERPRETATION OF DRAWINGS

GENERAL CONDITIONS OF THE CONTRACT FOR CONSTRUCTION ARE PART OF THE CONTRACT DOCUMENTS AND DESCRIBE USE AND INTENT OF THE DRAWING. THE CONTRACT DOCUMENTS INCLUDE NOT ONLY THE DRAWINGS, BUT ALSO THE OWNER-CONTRACTOR AGREEMENTS, CONDITIONS OF THE CONTRACT, THE SPECIFICATIONS, ADDENDA, AND MODIFICATIONS ISSUED AFTER EXECUTION OF THE CONTRACT. THESE CONTRACT DOCUMENTS ARE COMPLEMENTARY, AND WHAT IS REQUIRED BY ANY ONE SHALL BE BINDING AS IF REQUIRED BY ALL. WORK NOT COMPLETELY DELINEATED HEREON SHALL BE CONSTRUCTED OF THE SAME MATERIALS AND DETAILED SIMILARLY AS WORK SHOWN MORE COMPLETELY ELSEWHERE IN THE CONTRACT DOCUMENTS.

BY USE OF THE DRAWINGS FOR CONSTRUCTION OF THE PROJECT, THE OWNER CONFIRMS THAT HE HAS REVIEWED AND APPROVED THE DRAWINGS. THE CONTRACTOR CONFIRMS THAT HE HAS VISITED THE SITE, FAMILIARIZED HIMSELF WITH THE LOCAL CONDITIONS, VERIFIED FIELD DIMENSIONS AND CORRELATED HIS OBSERVATIONS WITH THE REQUIREMENTS OF THE CONTRACT DOCUMENTS.

AS INSTRUMENTS OF SERVICE, ALL DRAWINGS, SPECIFICATIONS, CADD FILES OR OTHER ELECTRONIC MEDIA AND COPIED THERE OF FURNISHED BY THE ENGINEER ARE HIS PROPERTY. THEY ARE TO BE USED ONLY FOR THIS PROJECT AND ARE NOT TO BE USED ON ANY OTHER PROJECT, INCLUDING REPEATS OF THE PROJECT. CHANGES TO THE DRAWINGS MAY ONLY BE MADE BY THE ENGINEER.

UNLESS THE REVISION TITLE IS "ISSUED FOR CONSTRUCTION", THESE DRAWINGS SHALL BE CONSIDERED PRELIMINARY AND SHALL NOT BE USED AS A CONSTRUCTION DOCUMENT.

THESE DRAWINGS ILLUSTRATES THE WORK TO BE DONE. THE ENGINEER IS NOT RESPONSIBLE FOR THE MEANS, METHODS, TECHNIQUES, SEQUENCES, AND PROCEDURES USED TO DO THE WORK, OR THE SAFETY ASPECTS OF CONSTRUCTION, AND NOTHING ON THESE DRAWINGS EXPRESSED OR IMPLIED CHANGES THIS CONDITION. CONTRACTOR SHALL DETERMINE ALL CONDITIONS AT THE SITE AND SHALL BE RESPONSIBLE FOR KNOWING HOW THEY AFFECT THE WORK. SUBMITTAL OF A BID TO PERFORM THIS WORK IS ACKNOWLEDGEMENT OF THE RESPONSIBILITIES, AND THAT THEY HAVE BEEN FULLY CONSIDERED IN PLANNING OF THE WORK, AND THE BID PRICE. NO CLAIMS FOR EXTRA CHANGES DUE TO THESE CONDITIONS WILL BE FORTHCOMING.

UNAUTHORIZED CHANGES:

IN THE EVENT THE CLIENT, THE CLIENT'S CONTRACTORS OR SUBCONTRACTORS, OR ANYONE FOR WHOM THE CLIENT IS LEGALLY LIABLE MAKES OR PERMITS TO BE MADE ANY CHANGES TO ANY REPORTS, PLANS, SPECIFICATIONS OR OTHER CONSTRUCTION DOCUMENTS PREPARED BY LRL ASSOCIATES LTD. (LRL) WITHOUT OBTAINING LRL'S PRIOR WRITTEN CONSENT, THE CLIENT SHALL ASSUME FULL RESPONSIBILITY FOR THE RESULTS OF SUCH CHANGES, THEREFORE THE CLIENT AGREES TO WAIVE ANY CLAIM AGAINST LRL AND TO RELEASE LRL FROM ANY LIABILITY ARISING DIRECTLY OR INDIRECTLY FROM SUCH UNAUTHORIZED CHANGES.

IN ADDITION, THE CLIENT AGREES, TO THE FULLEST EXTENT PERMITTED BY LAW, TO INDEMNIFY AND HOLD HARMLESS LRL FROM ANY DAMAGES, LIABILITIES OR COST, INCLUDING REASONABLE ATTORNEY'S FEES AND COST OF DEFENSE, ARISING FROM SUCH CHANGES.

IN ADDITION, THE CLIENT AGREES TO INCLUDE IN ANY CONTRACTS FOR CONSTRUCTION APPROPRIATE LANGUAGE THAT PROHIBITS THE CONTRACTOR OR ANY SUBCONTRACTORS OF ANY TIER FROM MAKING ANY CHANGES OR MODIFICATIONS TO LRL'S CONSTRUCTION DOCUMENTS WITHOUT THE PRIOR WRITTEN APPROVAL OF LRL AND THAT FURTHER REQUIRES THE CONTRACTOR TO INDEMNIFY BOTH LRL AND THE CLIENT FROM ANY LIABILITY OR COST ARISING FROM SUCH CHANGES MADE WITHOUT SUCH PROPER AUTHORIZATION.

GENERAL NOTES:

EXISTING SERVICES AND UTILITIES SHOWN ON THESE DRAWINGS ARE TAKEN FROM THE BEST AVAILABE RECORDS, BUT MAY NOT BE COMPLETE OR TO DATE. CONTRACTOR SHALL VERIFY IN FIELD FOR LOCATION AND ELEVATION OF PIPES AND CHECK WITH THE UTILITY COMPANIES BEFORE DIGGING OR PERFORMING WORK.

CONTRACTOR IS ADVISED TO COLLECT INFORMATION ON SOIL CONDITIONS BEFORE START OF CONSTRUCTION.

THE ENGINEER WAIVES ANY AND ALL RESPONSIBILITY AND LIABILITY FOR PROBLEMS WHICH ARISE FROM FAILURE TO FOLLOW THESE PLANS, SPECIFICATIONS AND THE DESIGN INTENT THEY CONVEY, OR FOR PROBLEMS WHICH ARISE FROM OTHERS' FAILURE TO OBTAIN AND/OR FOLLOW THE ENGINEER'S GUIDANCE WITH RESPECT TO ANY ERRORS, OMISSIONS, INCONSISTENCIES AMBIGUITIES OR CONFLICTS WHICH ARE ALLEGED.

CONTRACTOR TO VERIFY ALL DIMENSIONS AND NOTIFY THE ENGINEER OF ANY DISCREPANCIES BEFORE WORK COMMENCES. DO NOT SCALE DRAWINGS.

1.5m 0 3.0 6.0m
SCALE: 1:125

NOT FOR CONSTRUCTION TENDER OR PERMIT

No.	REVISIONS	BY	DATE
01	ISSUED FOR APPROVAL	T.H.	11 OCT 2022

LICENSED PROFESSIONAL ENGINEER
M. BASNET
100501996
2022/10/11
PROVINCE OF ONTARIO
NOT AUTHENTIC UNLESS SIGNED AND DATED

LRL
ENGINEERING | INGÉNIERIE
5430 Canotek Road I Ottawa, ON, K1J 9G2
www.lrl.ca I (613) 842-3434

CLIENT
GSI PROPERTIES

DESIGNED BY:	DRAWN BY:	APPROVED BY:
A.S.	A.O.	V.J.

PROJECT
PROPOSED 7-STOREY CONDO
RE-DEVELOPMENT
424 CHURCHILL AVE
OTTAWA, ON

DRAWING TITLE
POST-DEVELOPMENT
WATERSHED PLAN

PROJECT NO.
220224
DATE
AUGUST, 2022

C702

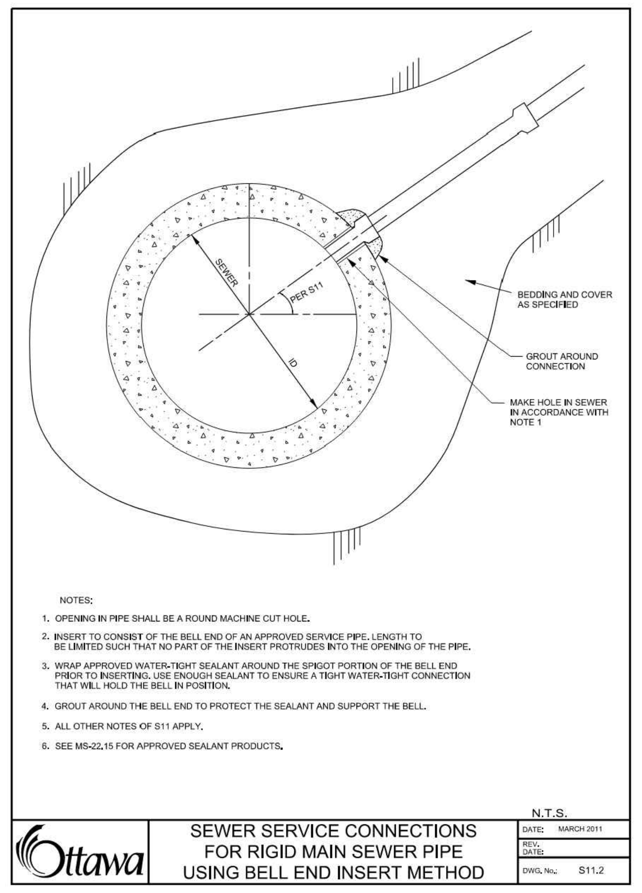

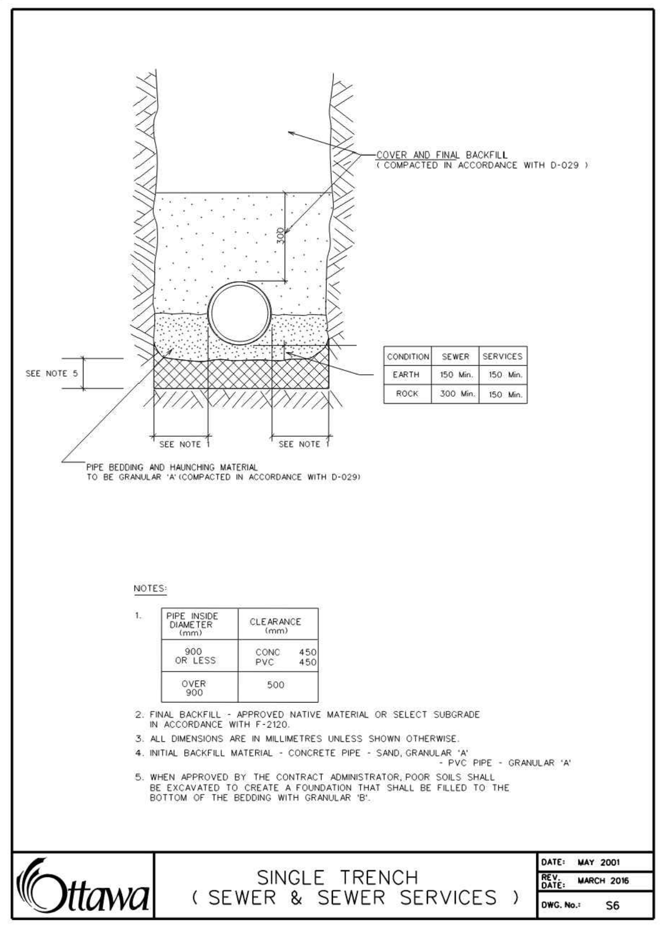

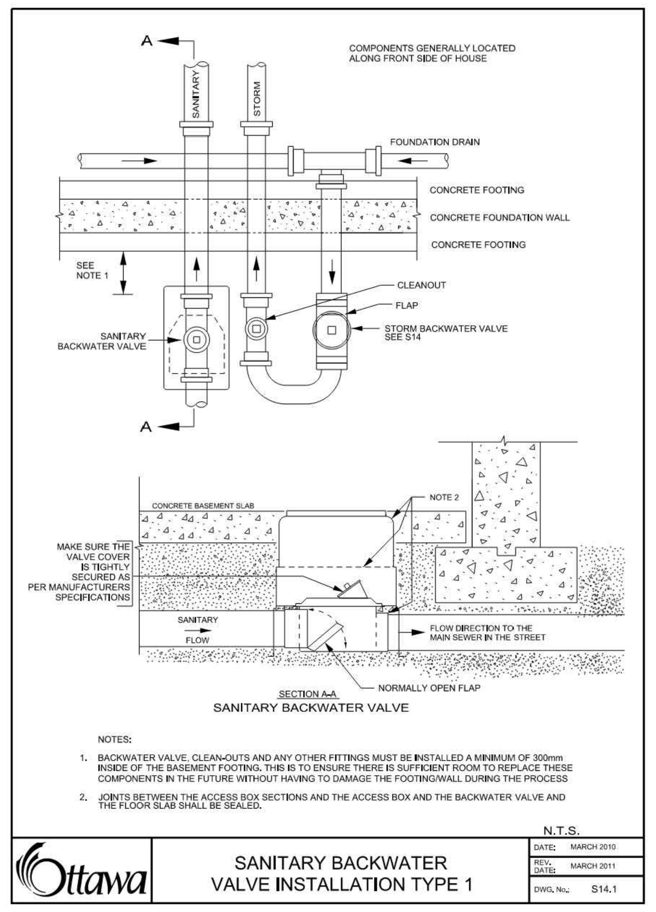

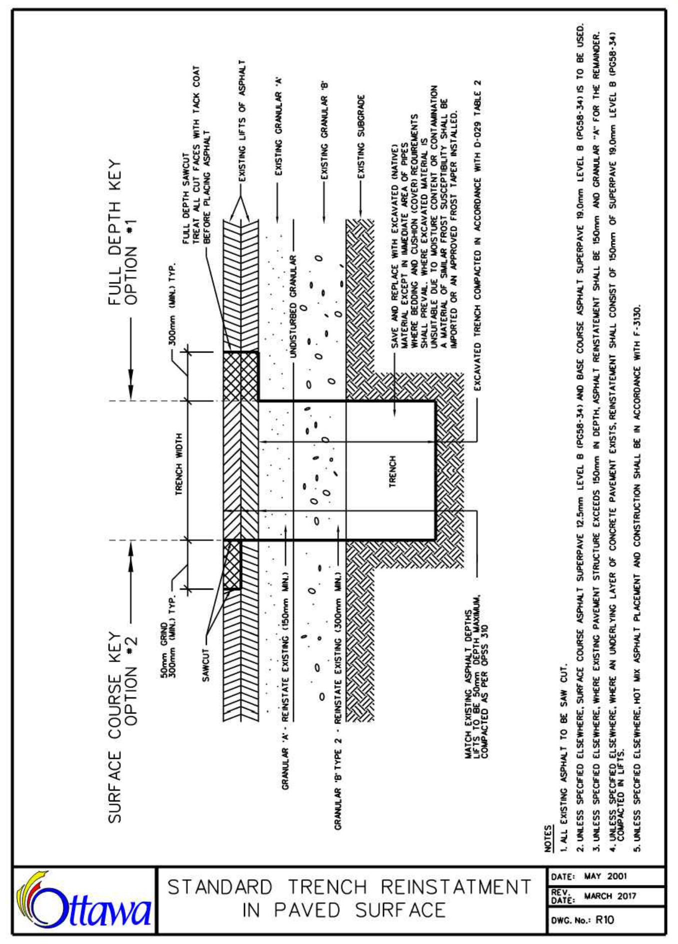

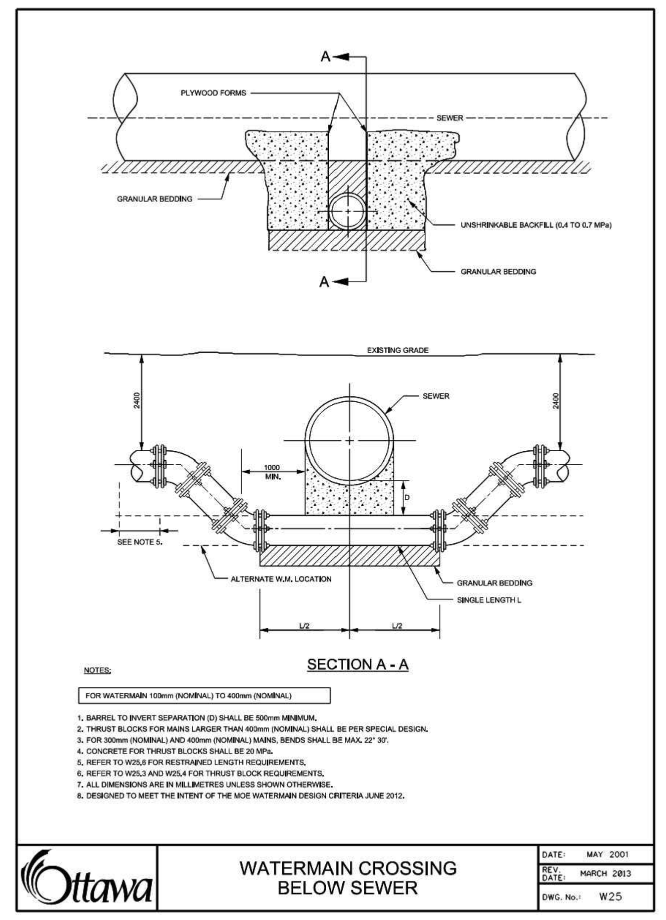

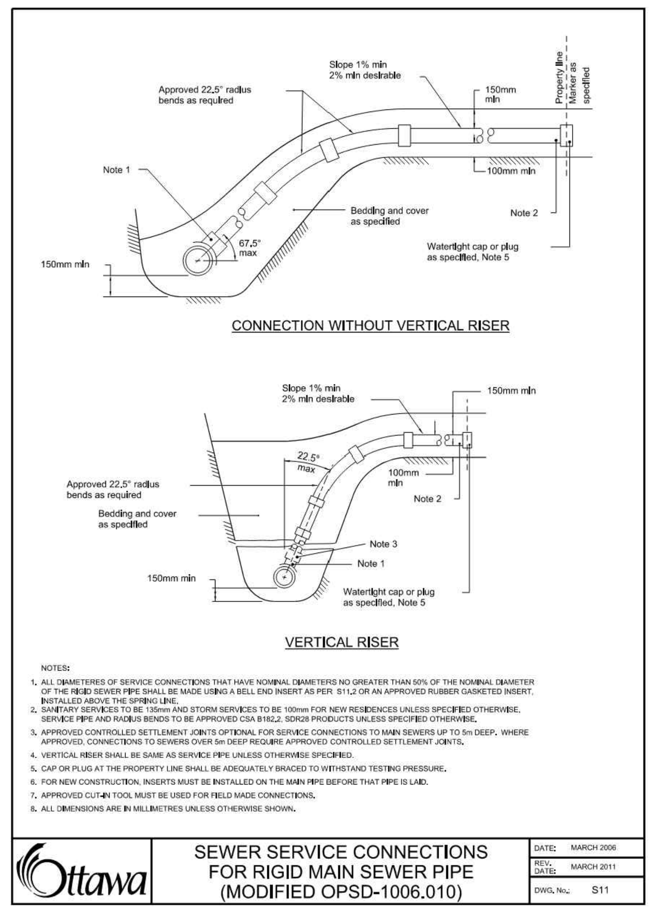

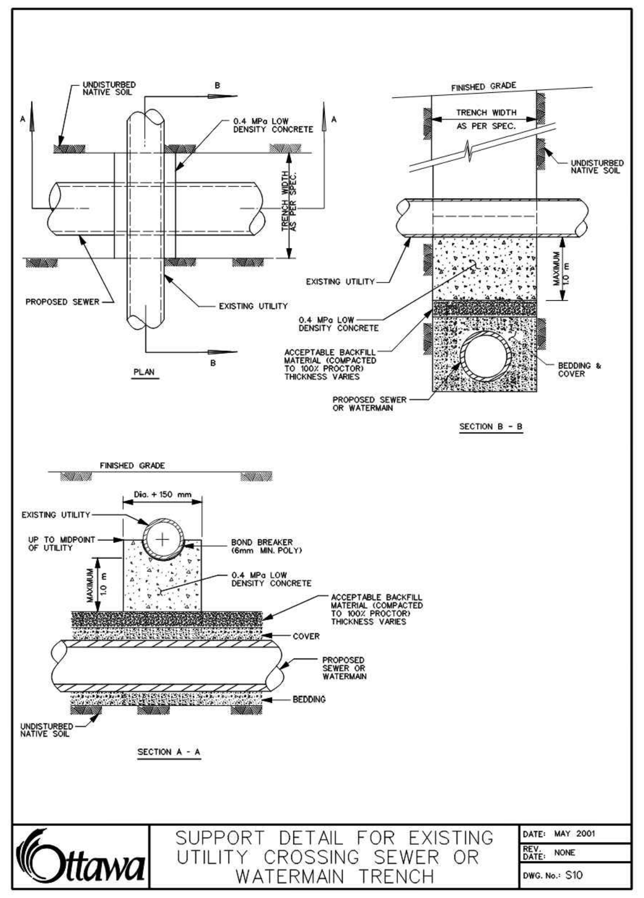

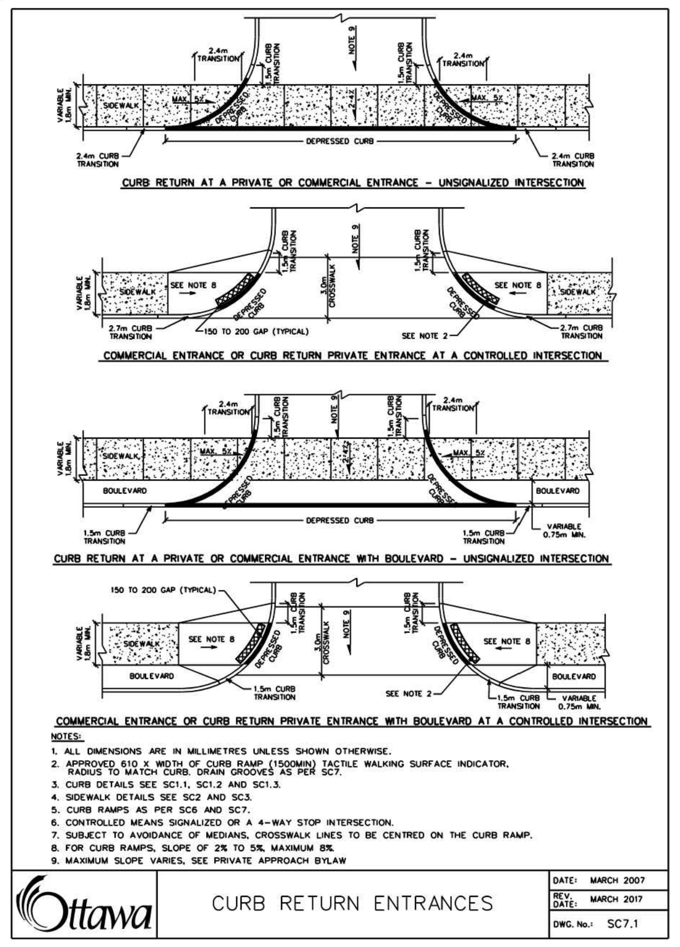

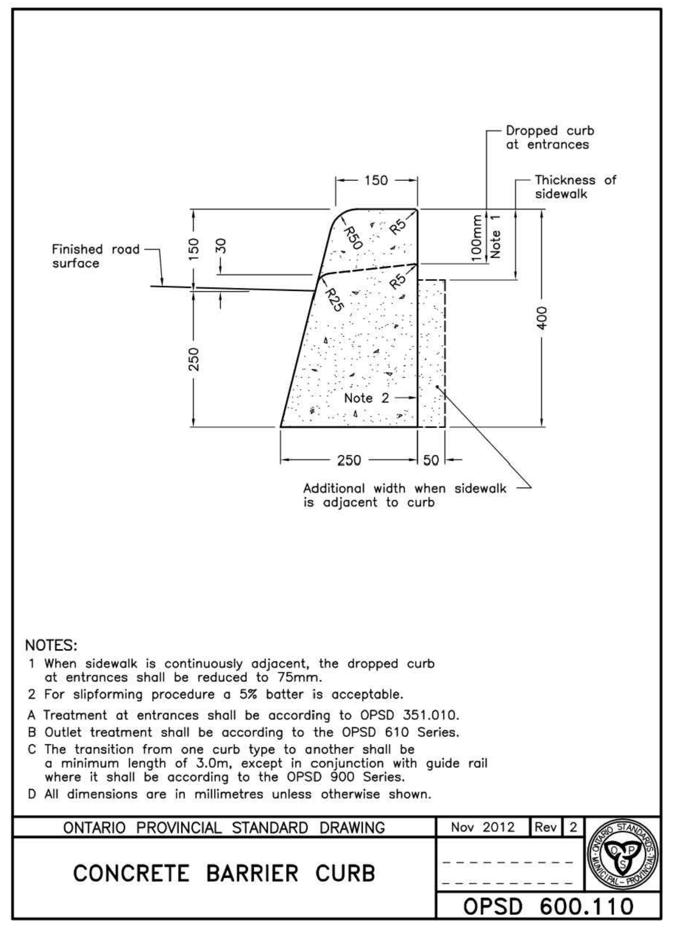

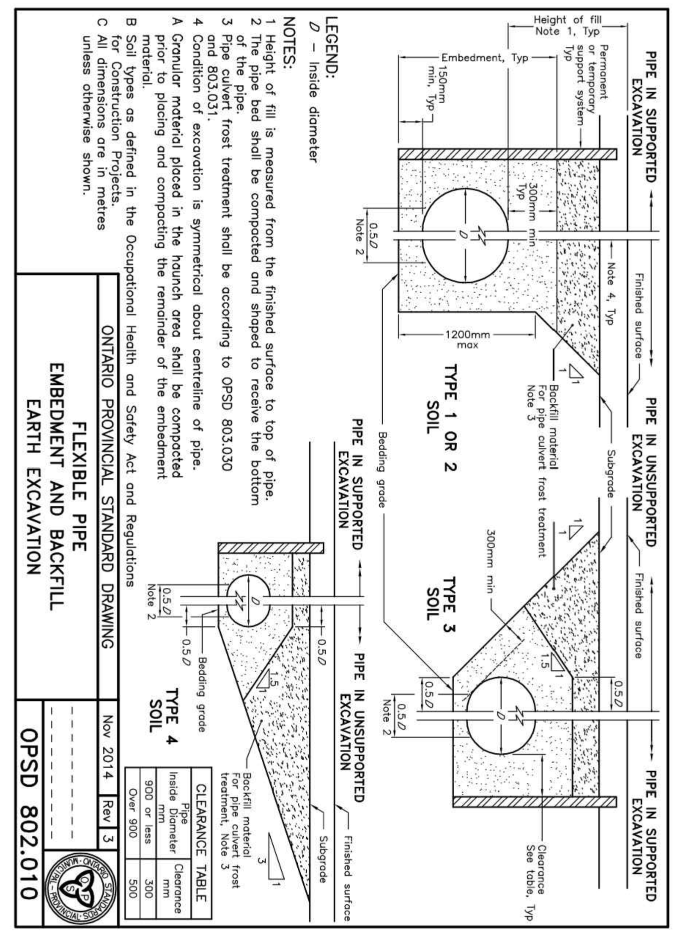

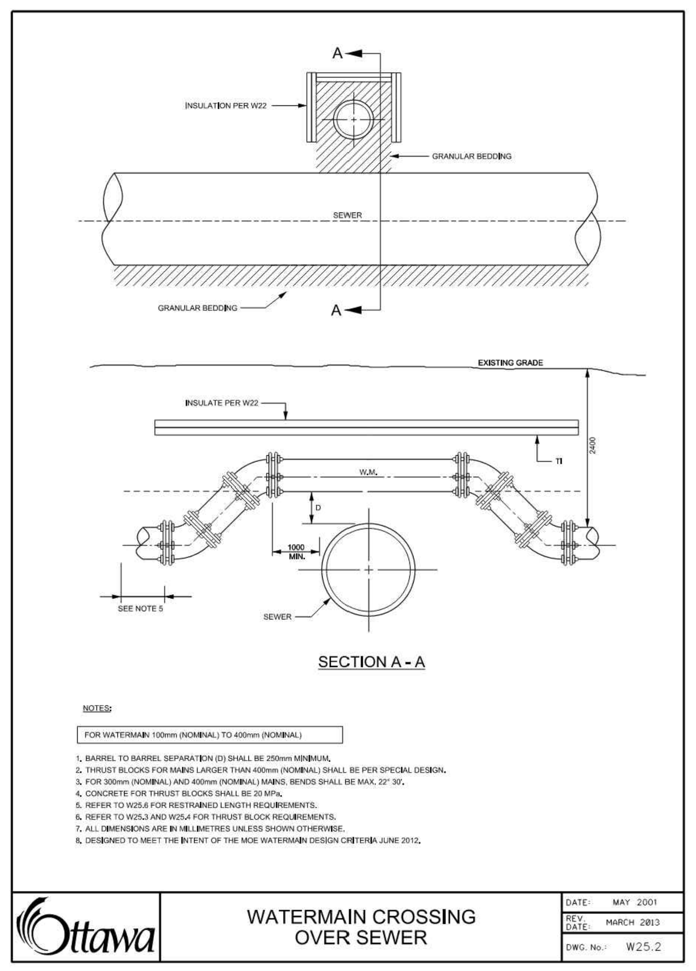

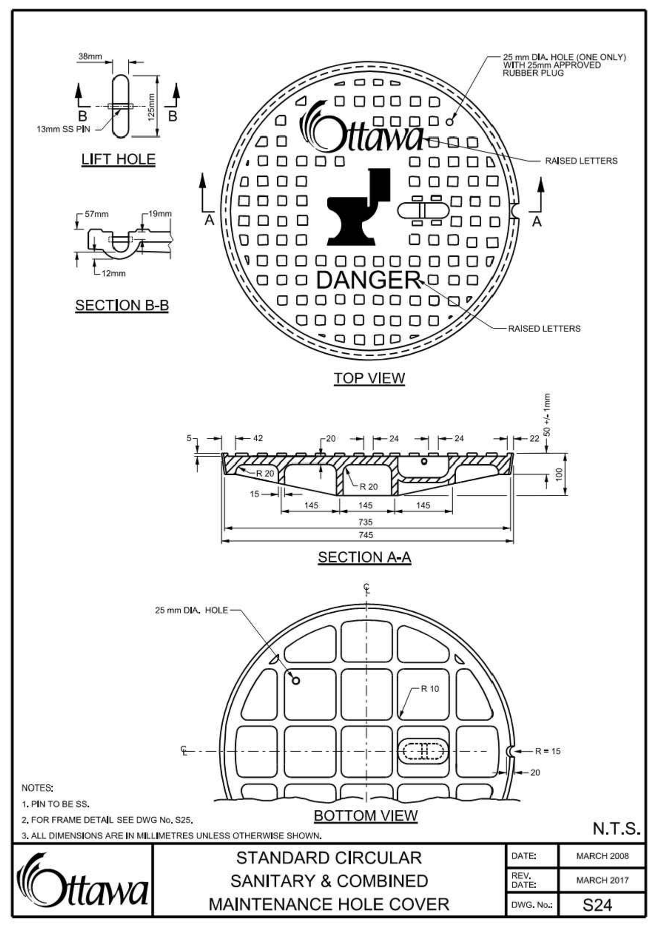

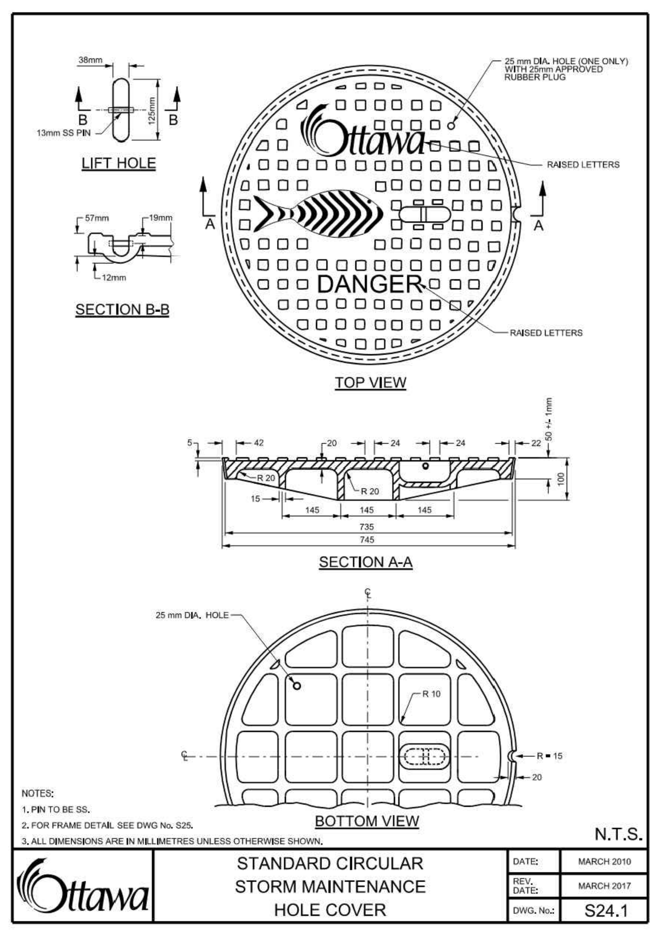

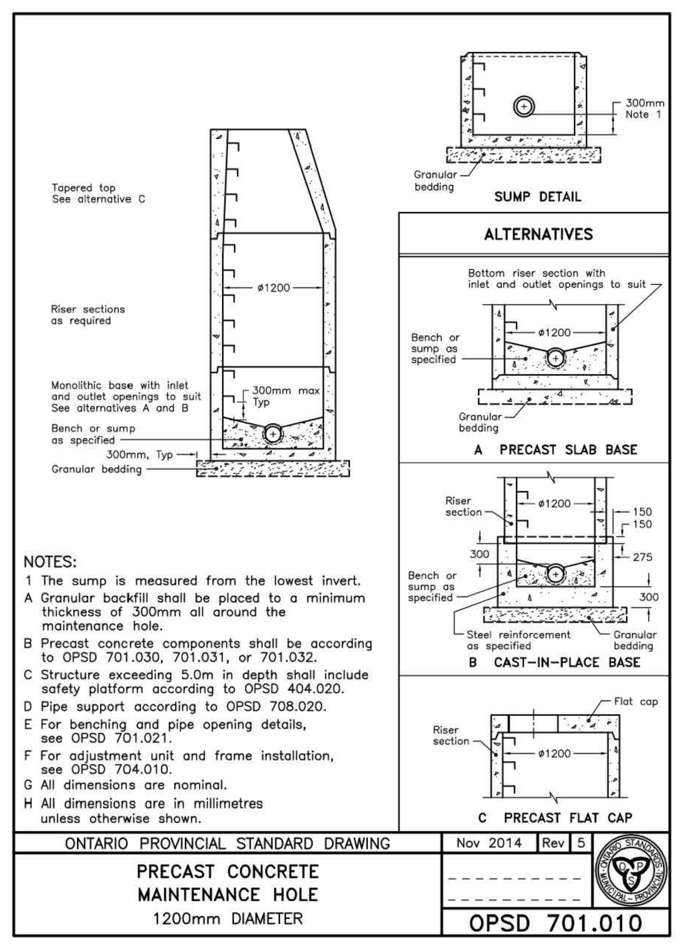

USE AND INTERPRETATION OF DRAWINGS

GENERAL CONDITIONS OF THE CONTRACT FOR CONSTRUCTION ARE PART OF THE CONTRACT DOCUMENTS AND DESCRIBE USE AND INTENT OF THE DRAWING. THE CONTRACT DOCUMENTS INCLUDE NOT ONLY THE DRAWINGS, BUT ALSO THE OWNER-CONTRACTOR AGREEMENTS, CONDITIONS OF THE CONTRACT, THE SPECIFICATIONS, ADDENDA, AND MODIFICATIONS ISSUED AFTER EXECUTION OF THE CONTRACT. THESE CONTRACT DOCUMENTS ARE COMPLEMENTARY, AND WHAT IS REQUIRED BY ANY ONE SHALL BE BINDING AS IF REQUIRED BY ALL. WORK NOT COMPLETELY DELINEATED HEREON SHALL BE CONSTRUCTED OF THE SAME MATERIALS AND DETAILED SIMILARLY AS WORK SHOWN MORE COMPLETELY ELSEWHERE IN THE CONTRACT DOCUMENTS.

BY USE OF THE DRAWINGS FOR CONSTRUCTION OF THE PROJECT, THE OWNER CONFIRMS THAT HE HAS REVIEWED AND APPROVED THE DRAWINGS. THE CONTRACTOR CONFIRMS THAT HE HAS VISITED THE SITE, FAMILIARIZED HIMSELF WITH THE LOCAL CONDITIONS, VERIFIED FIELD DIMENSIONS AND CORRELATED HIS OBSERVATIONS WITH THE REQUIREMENTS OF THE CONTRACT DOCUMENTS.

AS INSTRUMENTS OF SERVICE, ALL DRAWINGS, SPECIFICATIONS, CADD FILES OR OTHER ELECTRONIC MEDIA AND COPIED THERE OF FURNISHED BY THE ENGINEER ARE HIS PROPERTY. THEY ARE TO BE USED ONLY FOR THIS PROJECT AND ARE NOT TO BE USED ON ANY OTHER PROJECT, INCLUDING REPEATS OF THE PROJECT. CHANGES TO THE DRAWINGS MAY ONLY BE MADE BY THE ENGINEER.

UNLESS THE REVISION TITLE IS "ISSUED FOR CONSTRUCTION", THESE DRAWINGS SHALL BE CONSIDERED PRELIMINARY AND SHALL NOT BE USED AS A CONSTRUCTION DOCUMENT.

THESE DRAWINGS ILLUSTRATES THE WORK TO BE DONE. THE ENGINEER IS NOT RESPONSIBLE FOR THE MEANS, METHODS, TECHNIQUES, SEQUENCES, AND PROCEDURES USED TO DO THE WORK, OR THE SAFETY ASPECTS OF CONSTRUCTION, AND NOTHING ON THESE DRAWINGS EXPRESSED OR IMPLIED CHANGES THIS CONDITION. CONTRACTOR SHALL DETERMINE ALL CONDITIONS AT THE SITE AND SHALL BE RESPONSIBLE FOR KNOWING HOW THEY AFFECT THE WORK. SUBMITTAL OF A BID TO PERFORM THIS WORK IS ACKNOWLEDGEMENT OF THE RESPONSIBILITIES, AND THAT THEY HAVE BEEN FULLY CONSIDERED IN PLANNING OF THE WORK, AND THE BID PRICE. NO CLAIMS FOR EXTRA CHARGES DUE TO THESE CONDITIONS WILL BE FORTHCOMING.

UNAUTHORIZED CHANGES:

IN THE EVENT THE CLIENT, THE CLIENT'S CONTRACTORS OR SUBCONTRACTORS, OR ANYONE FOR WHOM THE CLIENT IS LEGALLY LIABLE MAKES OR PERMITS TO BE MADE ANY CHANGES TO ANY REPORTS, PLANS, SPECIFICATIONS OR OTHER CONSTRUCTION DOCUMENTS PREPARED BY LRL ASSOCIATES LTD. (LRL) WITHOUT OBTAINING LRL'S PRIOR WRITTEN CONSENT, THE CLIENT SHALL ASSUME FULL RESPONSIBILITY FOR THE RESULTS OF SUCH CHANGES. THEREFORE THE CLIENT AGREES TO WAIVE ANY CLAIM AGAINST LRL AND TO RELEASE LRL FROM ANY LIABILITY ARISING DIRECTLY OR INDIRECTLY FROM SUCH UNAUTHORIZED CHANGES.

IN ADDITION, THE CLIENT AGREES, TO THE FULLEST EXTENT PERMITTED BY LAW, TO INDEMNIFY AND HOLD HARMLESS LRL FROM ANY DAMAGES, LIABILITIES OR COST, INCLUDING REASONABLE ATTORNEY'S FEES AND COST OF DEFENSE, ARISING FROM SUCH CHANGES.

IN ADDITION, THE CLIENT AGREES TO INCLUDE IN ANY CONTRACTS FOR CONSTRUCTION APPROPRIATE LANGUAGE THAT PROHIBITS THE CONTRACTOR OR ANY SUBCONTRACTORS OF ANY TIER FROM MAKING ANY CHANGES OR MODIFICATIONS TO LRL'S CONSTRUCTION DOCUMENTS WITHOUT THE PRIOR WRITTEN APPROVAL OF LRL AND THAT FURTHER REQUIRES THE CONTRACTOR TO INDEMNIFY BOTH LRL AND THE CLIENT FROM ANY LIABILITY OR COST ARISING FROM SUCH CHANGES MADE WITHOUT SUCH PROPER AUTHORIZATION.

GENERAL NOTES:

EXISTING SERVICES AND UTILITIES SHOWN ON THESE DRAWINGS ARE TAKEN FROM THE BEST AVAILABLE RECORDS, BUT MAY NOT BE COMPLETE OR TO DATE. CONTRACTOR SHALL VERIFY IN FIELD FOR LOCATION AND ELEVATION OF PIPES AND CHECK WITH THE UTILITY COMPANIES BEFORE DIGGING OR PERFORMING WORK.

CONTRACTOR IS ADVISED TO COLLECT INFORMATION ON SOIL CONDITIONS BEFORE START OF CONSTRUCTION.

THE ENGINEER WAIVES ANY AND ALL RESPONSIBILITY AND LIABILITY FOR PROBLEMS WHICH ARISE FROM FAILURE TO FOLLOW THESE PLANS, SPECIFICATIONS AND THE DESIGN INTENT THEY CONVEY, OR FOR PROBLEMS WHICH ARISE FROM OTHERS' FAILURE TO OBTAIN AND/OR FOLLOW THE ENGINEER'S GUIDANCE WITH RESPECT TO ANY ERRORS, OMISSIONS, INCONSISTENCIES AMBIGUITIES OR CONFLICTS WHICH ARE ALLEGED.

CONTRACTOR TO VERIFY ALL DIMENSIONS AND NOTIFY THE ENGINEER OF ANY DISCREPANCIES BEFORE WORK COMMENCES. DO NOT SCALE DRAWINGS.

NOT FOR CONSTRUCTION TENDER OR PERMIT

No.	REVISIONS	BY	DATE
01	ISSUED FOR APPROVAL	T.H.	11 OCT 2022

LICENSED PROFESSIONAL ENGINEER
M. BASNET
100501996
2022/10/11
PROVINCE OF ONTARIO

NOT AUTHENTIC UNLESS SIGNED AND DATED

LRL
ENGINEERING | INGÉNIERIE
5430 Canotek Road | Ottawa, ON, K1J 9G2
www.lrl.ca | (613) 842-3434

CLIENT
GSI PROPERTIES

DESIGNED BY:	DRAWN BY:	APPROVED BY:
A.S.	A.O.	V.J.

PROJECT
PROPOSED 7-STOREY CONDO RE-DEVELOPMENT
424 CHURCHILL AVE
OTTAWA, ON

DRAWING TITLE
CONSTRUCTION DETAIL PLAN

PROJECT NO.
220224

DATE
AUGUST, 2022

C901

APPENDIX F

Proposed Site Plan
Legal Survey
As-builts

424 Churchill Avenue North, Ottawa

Zoning Data:

Zone: TM H(24)

Adjacent zones:
north: TBC
south: TBC
east: TBC
west: TBC

Frontage: 25.34 (Churchill Ave. N.)

Proposed building area: TBC

Proposed use: Apartment Dwelling, Mid-Rise

Proposed number of units: 48

Proposed car parking: 36

Mechanism	Required	Proposed	Notes
frontage (min.):	-	-	-
lot area (min.):	-	-	-
setbacks (min.):			
front yard (min.):	-	-	-
corner side yard (min.):	-	-	-
interior side yard (min.):	-	-	-
rear yard (min.):	-	-	-
lot coverage (min.):	-	-	-
landscaped area (min.):	-	-	-
building height (max.):	24 m	26.5 m	-
density (max.):	-	-	-

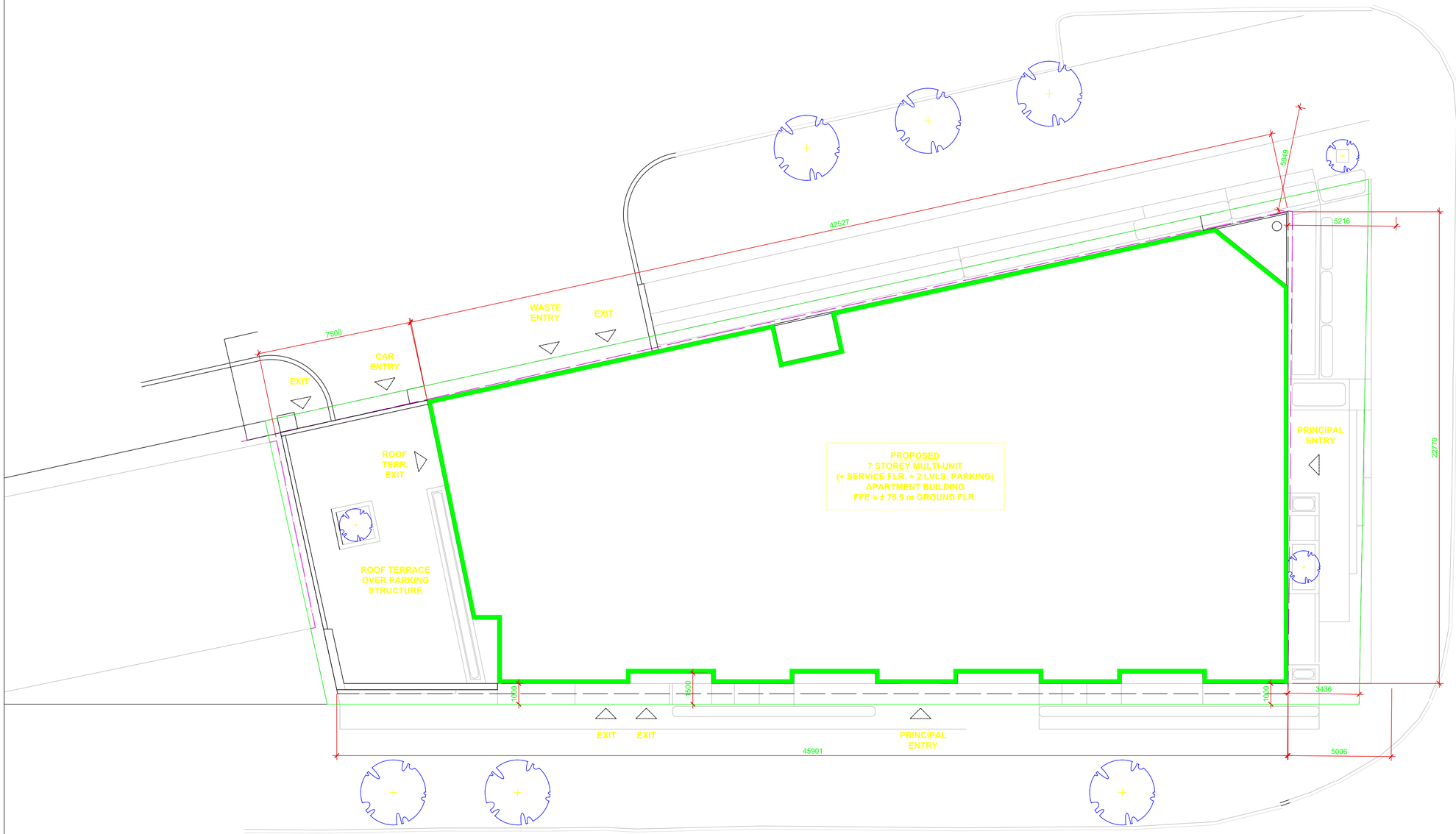

CLIENT / OWNER :
GSI SLOUGH STREET PROPERTIES INC.
5-145 SELECT AVE.,
TORONTO, ON, M1V 5M8
416-292-9920

CONSULTING PLANNER :
FOTENN
396 COOPER STREET, SUITE 300
OTTAWA, ON K2P 2H7
613-730-5709

rev. / issue	description	date MM/DD/YY
01	ISSUED FOR PRE-CONSULTATION W/ COUNCILLOR	25 JUL. 2022

THE ARCHITECT WAIVES ANY AND ALL RESPONSIBILITY AND LIABILITY FOR PROBLEMS WHICH ARISE FROM FAILURE TO FOLLOW THESE PLANS, SPECIFICATIONS, AND THE DESIGN INTENT THEY CONVEY, OR FOR PROBLEMS WHICH ARISE FROM OTHERS' FAILURE TO OBTAIN AND/OR FOLLOW THE ARCHITECTS GUIDANCE WITH RESPECT TO ANY ERRORS, OMISSIONS, INCONSISTENCIES, AMBIGUITIES OR CONFLICTS WHICH ARE ALLEGED.

IT IS THE RESPONSIBILITY OF THE APPROPRIATE CONTRACTOR TO CHECK AND VERIFY ALL DIMENSIONS ON SITE AND PROMPTLY REPORT ALL ERRORS AND/OR OMISSIONS TO THE CONSULTANT BEFORE WORK COMMENCES.

ALL WORK IS TO FOLLOW THE OBC 2012 AND ANY OTHER APPLICABLE CODES AND REGULATIONS.

DO NOT SCALE DRAWINGS.

THESE DRAWINGS ARE NOT TO BE USED FOR CONSTRUCTION UNLESS A BUILDING PERMIT IN RESPECT OF THIS PROJECT HAS BEEN GRANTED BY AUTHORITIES AND THEY ARE ISSUED FOR CONSTRUCTION.

COPYRIGHT RESERVED.

professional stamp

project north

Kristopher D. Benes, OAA, MRAIC, LEED AP

OPA open plan architects inc.
architecture | interiors | concepts

2305 HILLARY AVE. | OTTAWA | ON | K1H 7J2
613.883.5090 | info@openplan.ca

project

424 CHURCHILL AVE N.,
CONDOMINIUM

drawing

CONCEPT SITE PLAN

drawn: KDB	date: 2022-JUL-25
approved: KDB	revision: 0
project no.: 2109	scale: 1 : 100
drawing no.: A000	

TOPOGRAPHICAL PLAN OF SURVEY OF

LOT 1 and PART OF LOT 2 (South Danforth Avenue) REGISTERED PLAN 204 CITY OF OTTAWA

Prepared by Annis, O'Sullivan, Vollebekk Ltd.

AMENDED July 12th, 2022 to illustrate tree sizes & locations, additional street servicing & details, new vertical Benchmark No.1 and updated overhead wire locations & elevations.

Scale 1 : 150

6 4.5 3.0 1.5 0 3 6 Metres

Metric

DISTANCES SHOWN ON THIS PLAN ARE IN METRES AND CAN BE CONVERTED TO FEET BY DIVIDING BY 0.3048

JOB BENCHMARK No.2
Fire Hydrant - Top of Spindle
Elev = 70.07

JOB BENCHMARK No.1
MAG nail in West Face of UP
Elev = 73.54

DANFORTH AVENUE (FORMERLY JAMES STREET, INST. NP48636)

PIN 04017 - 0136

CHURCHILL AVENUE NORTH (FORMERLY MAIN STREET) BETWEEN LOTS 30 AND 31) (ROAD ALLOWANCE)

PIN 04020 - 0170

PART OF LOT 30 CONCESSION I (OTTAWA FRONT) (NEPEAN)

BYRON AVENUE (FORMERLY OTTAWA ELECTRIC RAILWAY RIGHT-OF-WAY BRITANNIA BRANCH)

PIN 04017-0138

REGISTERED PLAN 3

REGISTERED PLAN 4

LOT 5

LOT 1

LOT 2

LOT 3

PART 2 PLAN 4R-22956

204

No. 325 (Easterly face noted) 0.34 (P1,P3)Meas.

No. 414 (Brick Noted) 0.34 (P1,P3)Set

No. 424 1 Storey Brick & Concrete Block Building (Foundation Noted) Building Flashing Elev.=82.00 (Brick Noted)

Door Sill Elevation=69.88

Top of Flashing Elev.=76.0

Door Sill Elevation=75.92

Door Sill Elevation=75.95

Chimneys (x2)

Approximate Crown of Road

Concrete Curb

Edge of Asphalt

Depressed Curb

Sheet Ruling

Asphalt Parking Lot

Hydro Transformer Concrete Pad

Hydro Pole with Transformer

Traffic Control Box

Traffic Cable in vicinity

Bell Cable

Gas Main (Approximate)

Storm Sewer

Sanitary Sewer

Watermain (Approximate)

Concrete Curb

Concrete Step

Concrete Planter

Canopy

Pillar

Hand Rail

Window Well

Ramp

Brick Retaining Wall with Concrete Cap

Wall ± to Line

Interlock

Hand Rail-RWC (Western face noted)

Hydro Cable in vicinity

Overhead Wires

Utility Pole

Light Standard

Catch Basin

Fire Hydrant

Water Valve

Top of Grate

Gas Meter

Handhole

Traffic Signal Post

Bollard

Sign

Timber Retaining Wall

Concrete Retaining Wall

Hydro Transformer

Diameter

Centreline

Property Line

Underground Fibre Optic

Underground Power (Lighting)

Underground Water

Underground Power

Underground Traffic Cable

Underground Storm Sewer

Underground Sanitary Sewer

Notes & Legend

Denotes

—□—	"	Survey Monument Planted
—■—	"	Survey Monument Found
SSIB	"	Short Standard Iron Bar
IB	"	Iron Bar
CC	"	Cut Cross
(WIT)	"	Witness
Meas.	"	Measured
(AOG)	"	Annis, O'Sullivan, Vollebekk Ltd.
(DI)	"	Deed Inst. N632657
(P)	"	Registered Plan 204
(P1)	"	(AOG) Plan dated Dec. 1, 2003
(P2)	"	Plan 4R-22856
(P3)	"	(AOG) Plan dated Sept. 29, 1999
(P4)	"	(AOG) Plan dated June 24, 2020
(P5)	"	(671) Plan dated Feb. 4, 1986
RW-C	"	Concrete Retaining Wall
RW-CB	"	Concrete Block Retaining Wall
○ MH-ST	"	Maintenance Hole (Storm Sewer)
○ MH-S	"	Maintenance Hole (Sanitary)
○ MH-T	"	Maintenance Hole (Traffic)
⊖ VC	"	Valve Chamber (Watermain)
	"	Deciduous Tree
+ 69.09	"	Location of Elevations
+ 69.00	"	Top of Concrete Curb Elevation

ASSOCIATION OF ONTARIO LAND SURVEYORS
PLAN SUBMISSION FORM
V-19592

THIS PLAN IS NOT VALID UNLESS IT IS AN EMBOSSED ORIGINAL COPY ISSUED BY THE SURVEYOR In accordance with Regulation 1026, Section 29 (3).

SITE AREA = 1009.6 m²

ELEVATION NOTES

1. Elevations shown are geodetic and are referred to the CGVD28 geodetic datum.
2. It is the responsibility of the user of this information to verify that the job benchmark has not been altered or disturbed and that it's relative elevation and description agrees with the information shown on this drawing.

UTILITY NOTES

1. This drawing cannot be accepted as acknowledging all of the utilities and it will be the responsibility of the user to contact the respective utility authorities for confirmation.
2. Only visible surface utilities were located.
3. A field location of underground plant by the pertinent utility authority is mandatory before any work involving breaking ground, probing, excavating etc.
4. Underground servicing information shown are as illustrated on City Of Ottawa plan No.'s ; E-04-23 , ISB08-5000 (Sheets 016, 017), 1772 (Sheet 1).

Surveyor's Certificate

I CERTIFY THAT :

1. This survey and plan are correct and in accordance with the Surveys Act and the Surveyors Act and the regulations made under them.
2. The survey was completed on the 9th day of December, 2021.

December 10, 2021
Date

A. Andrew Sheils
Ontario Land Surveyor

Bearings are grid, derived from Can-Net 2016 Real Time Network GPS observations on the northerly boundary of Danforth Avenue having a bearing of N53°00'10"W and are referenced to Specified Control Points 01919680005 and 01919680105, MTM Zone 9 (76°30' West Longitude) NAD-83 (original).

For bearing comparisons, a rotation of 0°42'50" counter-clockwise was applied to bearings on plans (P2) and (P3).

For comparison purposes, bearings shown on Plans (P) and (P5) are astronomic bearings.

© Annis, O'Sullivan, Vollebekk Ltd. 2021. "THIS PLAN IS PROTECTED BY COPYRIGHT"

ANNIS, O'SULLIVAN, VOLLEBEKK LTD.
14 Concourse Gate, Suite 500
Nepean, Ont. K2E 7S6
Phone: (613) 727-0850 / Fax: (613) 727-1079
Email: Nepean@aovltd.com
Ontario Land Surveyors

Job No. 22329-2I (Amend) GSI Properties Pt. Lts 1,2 Pl.204 T F2 ns

1772 DANFORTH AVENUE

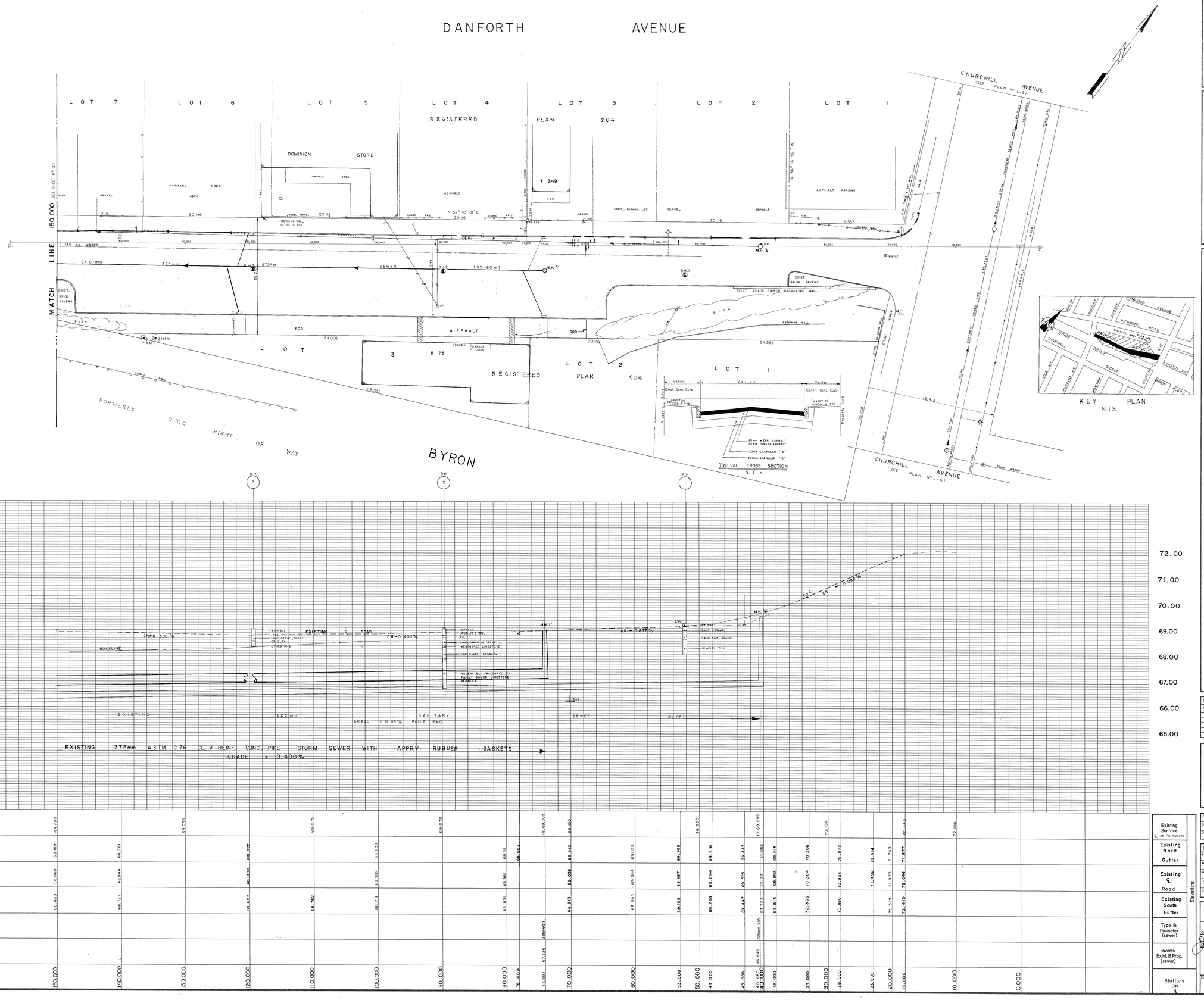

Elevations	Stations ON ℄
Existing Surface ℄ of Rd. Surface	150.000: 69.085; 140.000: 68.819; 130.000: 68.860; 120.000: 68.839; 110.000: 69.035; 100.000: 68.781; 90.000: 68.844; 80.000: 68.727; 78.000: 68.722; 76.000: 68.800; 74.000: 68.627; 73.500: 68.762; 70.000: 69.075; 60.000: 68.838; 53.000: 68.909; 50.000: 68.779; 48.000: 68.970; 43.000: 68.938; 40.000: 68.831; 38.000: 68.581; 33.000: 68.386; 30.000: 68.302; 28.000: 69.009; 22.000: 69.150; 20.000: 68.913; 18.000: 69.023; 10.000: 69.044; 0.000: 69.109
Existing North Gutter	150.000: 68.819; 140.000: 68.781; 130.000: 68.722; 120.000: 68.800; 110.000: 68.762; 100.000: 68.838; 90.000: 68.909; 80.000: 68.779; 78.000: 68.800; 74.000: 68.762; 73.500: 68.838; 70.000: 68.938; 60.000: 68.909; 53.000: 68.779; 50.000: 68.831; 48.000: 68.581; 43.000: 68.386; 40.000: 68.302; 38.000: 68.913; 33.000: 69.023; 30.000: 69.109; 28.000: 69.216; 22.000: 69.294; 20.000: 69.457; 18.000: 69.525; 10.000: 69.044; 0.000: 69.187
Existing ℄ Road	150.000: 68.860; 140.000: 68.844; 130.000: 68.800; 120.000: 68.627; 110.000: 68.762; 100.000: 68.779; 90.000: 68.909; 80.000: 68.727; 78.000: 68.800; 74.000: 68.627; 73.500: 68.762; 70.000: 68.938; 60.000: 68.909; 53.000: 68.779; 50.000: 68.831; 48.000: 68.581; 43.000: 68.386; 40.000: 68.302; 38.000: 68.913; 33.000: 69.023; 30.000: 69.109; 28.000: 69.216; 22.000: 69.294; 20.000: 69.457; 18.000: 69.525; 10.000: 69.044; 0.000: 69.187
Existing South Gutter	150.000: 68.839; 140.000: 68.727; 130.000: 68.627; 120.000: 68.762; 110.000: 68.779; 100.000: 68.831; 90.000: 68.727; 78.000: 68.627; 73.500: 68.762; 70.000: 68.831; 60.000: 68.779; 53.000: 68.831; 50.000: 68.581; 48.000: 68.386; 43.000: 68.302; 40.000: 68.913; 38.000: 69.045; 33.000: 69.109; 30.000: 69.216; 28.000: 69.294; 22.000: 69.457; 20.000: 69.525; 18.000: 69.044; 10.000: 69.109; 0.000: 69.216
Type & Diameter (sewer)	78.000: 375mmST.; 28.000: 225mm SAN.
Inverts Exist. & Prop. (sewer)	78.000: 67.136; 28.000: 66.545

Elevations	Stations ON ℄
Existing Surface ℄ of Rd. Surface	72.186; 72.046; 71.414; 71.763; 71.877; 72.046; 72.410
Existing North Gutter	71.492; 71.973; 72.046; 72.329; 72.410
Existing ℄ Road	71.414; 71.763; 71.877; 72.046; 72.410
Existing South Gutter	71.492; 71.973; 72.046; 72.329; 72.410
Type & Diameter (sewer)	
Inverts Exist. & Prop. (sewer)	

City Of Ottawa
Department Of Physical Environment
Engineering And Surveys Branch

Notes:
- Utilities shown are taken from best available records. Contractor is requested to check with all utility companies before digging.
- Soil information shown is not guaranteed and contractors are advised to collect additional soils information as deemed necessary.
- Reference bench mark: N-12. Fire Station Churchill Ave.
  Note: Chanage 0.00 Imperial in Book 3840 has been altered to 10.00meters on Plan 1772 also in book 3840

Notes: (Sewer Construction Only)
- A minimum of 460 mm vertical clearance to be maintained between sewers and watermains where practical.
- Borehole soil descriptions are not based on sieve analysis but on visual inspection only, except where otherwise noted.
- Soil information taken from: GOLDER Associates May 1983.
- Date of television inspection: Tomarack June 5, 1984
- This plan supercedes (in whole or in part) plan no: 1425
- Actual rock line recorded during construction of existing Storm sewer.
- Registered plan no.: 204
- Proposed storm and sanitary sewers may be constructed in a common trench provided that a minimum horizontal distance of 460mm is maintained between outside barrels of pipe.

Legend:

	EXISTING	PROPOSED
STORM SEWER		
SANITARY SEWER		
STREET LINE		
LOT LINE		
ROADS & DRIVEWAYS		
Curb	TYPE	TYPE
Asphalt or Concrete	TYPE	TYPE
Surface Treated	TYPE	TYPE
WALKS		
Concrete or Asphalt	TYPE	TYPE
Gravel, Cinder or Dirt	TYPE	TYPE
DEPRESSED ACCESS		
On Curb		
On Sidewalk		
WATERMAIN		PROP.
GASMAIN & VALVE		PROP.
BELL		PROP.
HYDRO		PROP.
TRAFFIC		PROP.
FIRE ALARM		
CABLEVISION	TV	TV PROP.
STEAM LINE	S	S PROP.
HYDRANT		PROP.
WATER VALVE		PROP.
STAND PIPE	SP	SP
WATER VALVE CHAMBER		
SEWER, TRAFFIC, HYDRO & BELL MANHOLES (may be labelled for clarification)		
TRAFFIC HANDHOLE	TH	TH
GUARD RAIL		
RETAINING WALL	RW	RW PROP.
FENCE	F	F PROP.
HYDRO POLE	HP	HP
HYDRO POLE & LIGHT	HP	HP
BELL POLE	BP	BP
TRAFFIC LIGHT		
LIGHT STANDARD		
TRAFFIC SIGN		
STREET SIGN		
CULVERT & DITCH		PROP.
STANDARD CATCH BASIN & LEAD		
HEAVY DUTY CATCH BASIN & LEAD		
CATCH BASIN TO BE REMOVED & REPLACED WITH STANDARD C.B.		
HEAVY DUTY CATCH BASIN TO BE REMOVED & REPLACED WITH HEAVY DUTY CATCH BASIN		
HOUSE or CATCH BASIN CONNECTION TAKEN FROM TV. INSPECTION		
HOUSE or CATCH BASIN CONNECTION TAKEN FROM RECORDS		
RELOCATION		
REMOVAL		
SQUARE IRON BAR	SIB	
STANDARD IRON BAR	SIB	
ROUND IRON BAR	RIB	
TREE, SHRUB & HEDGE		
BOREHOLE	BH	
ROCK		

- IN PLAN SEWERS 600mm Ø & ABOVE ARE SHOWN AS DOUBLE LINE, TO SCALE, USING SAME LINE WEIGHT.
- UTILITIES X-OUT ARE ABANDONED, BELL PLANT SO MARKED MAY BECOME ACTIVE

Revisions:

No	Date	Description	Drawn By	Appr'd By
1	June 27/84	Street Alignment	D. Mc	P. Sauvé

PROFESSIONAL ENGINEERS PROVINCE OF ONTARIO
P. E. SAUVE

Designed By W.T. Cardo May 84 Date
Survey Detail By S. St-Germain Jan/84 Date
Drafting By D.A. Mc EWAN Jan. 83 Date
Structural Check By Date
Checked By S. St-Germain 27/Jun/84 Date
Checked By [illegible] June/84 Date

Final Measurements:

Construction Type	ROAD & SEWER	Contractor	BEAVER ASPH. CONTR.
Work Commenced	OCT 84	Inspector	K. ROGERS
Work Completed	JUNE 85	Instrumentman	D. BROWN
Designer	W.T. CARDO	Field Book #	4437
Drafting Revisions	B.L.R. (T.E.S.) ✓ B.G.	Date	DEC. 12/84
		Checked By	

Design And Construction Division

C. Sim P. Eng. — Commissioner
D.K. Donaldson P. Eng. — Branch Director
Chief Design & Values Engr. — Senior Const. Coord.

STORM SEWER CONSTRUCTION AND ROAD RECONSTRUCTION WITH CURBS
DANFORTH AVE
CHURCHILL AVENUE TO CH. 150 000

Contract No	Survey Books	Scales	Plan No
83 - 21	3840 4239 4340	HOR. 1 = 200 VERT. 1 = 50	1772 Sheet 1 of 2

STATIONS	PROPOSED ℄ OF ROAD	TOP OF WATERMAIN
+048	69.29	
+044.9		67.20
+043	69.52	
+041.3		67.48
+039.10		67.66
+038	69.89	67.7
+034		68.17
+033	70.38	
+028.3	70.93	68.96
+025		69.44
+023	71.49	
+019.0		69.79
+018	72.04	
+014.6		69.74
+003.6		70.02
0.00		

Regional Municipality of Ottawa-Carleton Works Department

R O PICKARD
Works Commissioner

Engineer in Charge of Design & Construction
[signature]
Date 15/6/84

REGISTERED PROFESSIONAL ENGINEER — T. J. SLACK — PROVINCE OF ONTARIO

Project Officer: Timothy J Slack, P.Eng. Date: June 15, 1984.

Drawn by: N H M Date: JUNE/84

Approved by: Date:

Notes

"WATERMAINS AND SERVICE CONNECTIONS TO RECEIVE FROST PROTECTION AS REQUIRED, PER R.M O.C. STANDARDS AND SPECIFICATIONS"

Scales
HOR: 1-250
VERT: 1-50

REVISIONS
1. "AS BUILT" FROM FIELD BOOK NO 660 & FIELD PRINT [signature] JAN./85 RM.

Project Title

DANFORTH AVE.
CHURCHILL AVE.-to
50 m. WEST.

Drawing No.: 3117 Sheet

K+E HERCULENE® DRAFTING FILM

7254

TITLE FRAME: 709mm x 534mm City of Ottawa 2008

CHURCHILL AVENUE
REHABILITATION
SCOTT STREET TO BYRON AVENUE

CHURCHILL
PLAN AND PROFILE
10+300 TO 10+450

BRUCE MASON, P.Eng. — Manager - Division
TODD PENFOUND, C.E.T. — Project Manager

Ottawa

Contract No. ISB08-5000 | Dwg. No. 016

Sheet 16 of 55

Asset No.

Asset Group: ISB

Des: NTO | Chk'd: ERD

Dwn: RCH | Chk'd: DHI

Utility Circ. No.:

Const. Inspector:

Scale:
HORIZONTAL
0m 5 10
0m 1 2
VERTICAL

NOTE:
The location of utilities is approximate only, the exact location should be determined by consulting the municipal authorities and utility companies concerned. The contractor shall prove the location of utilities and shall be responsible for adequate protection from damage.

NOVATECH ENGINEERING CONSULTANTS LTD.
Suite 200, 240 Michael Cowpland Drive, Ottawa, Ontario K2M 1P6
Telephone (613) 254-9643
Fax (613) 254-5867
Email novatech@novatech-eng.com

REVISIONS

No.	Description	By	Date
1.	ISSUED FOR PRELIMINARY DESIGN CIRCULATION	ERD	07/10/09
2.	ISSUED FOR MOE APPROVAL	ERD	07/24/09
3.	ISSUED FOR TENDER	ERD	11/06/09
4.	ISSUED FOR DESIGN CIRCULATION	ERD	11/06/09
5.	ISSUED FOR CONSTRUCTION	ERD	03/09/10
6.	REVISED PROFILE	ERD	08/19/10
7.	AS-BUILT	ERD	04/12/12

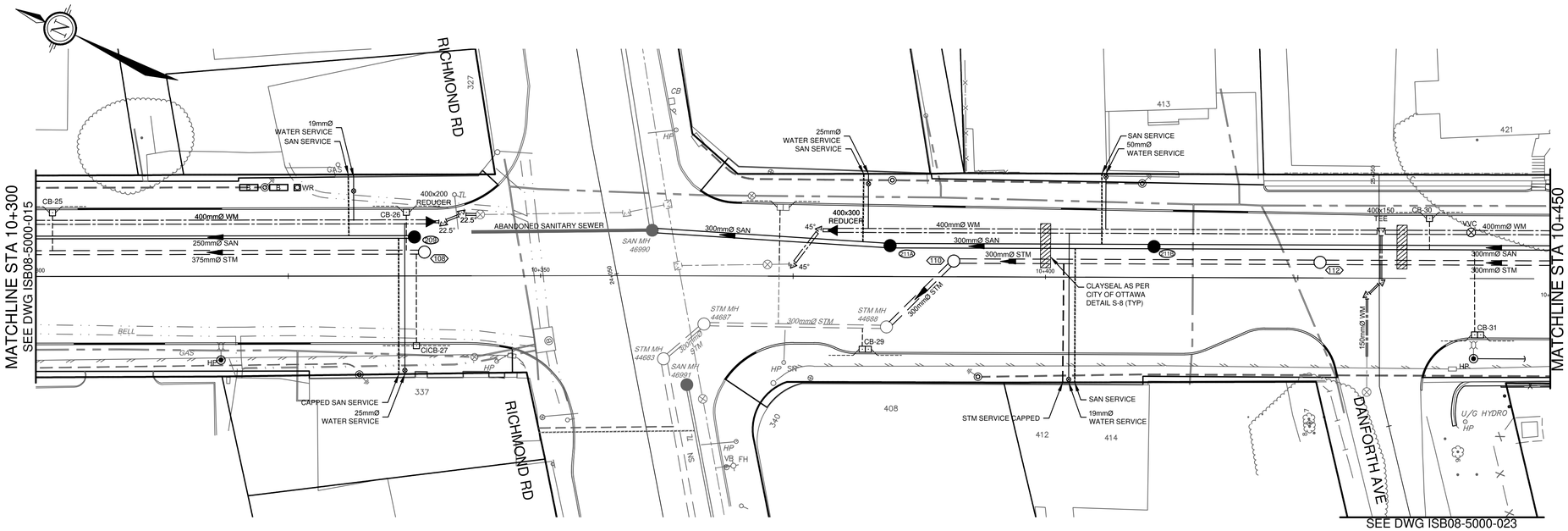

CHURCHILL AVENUE

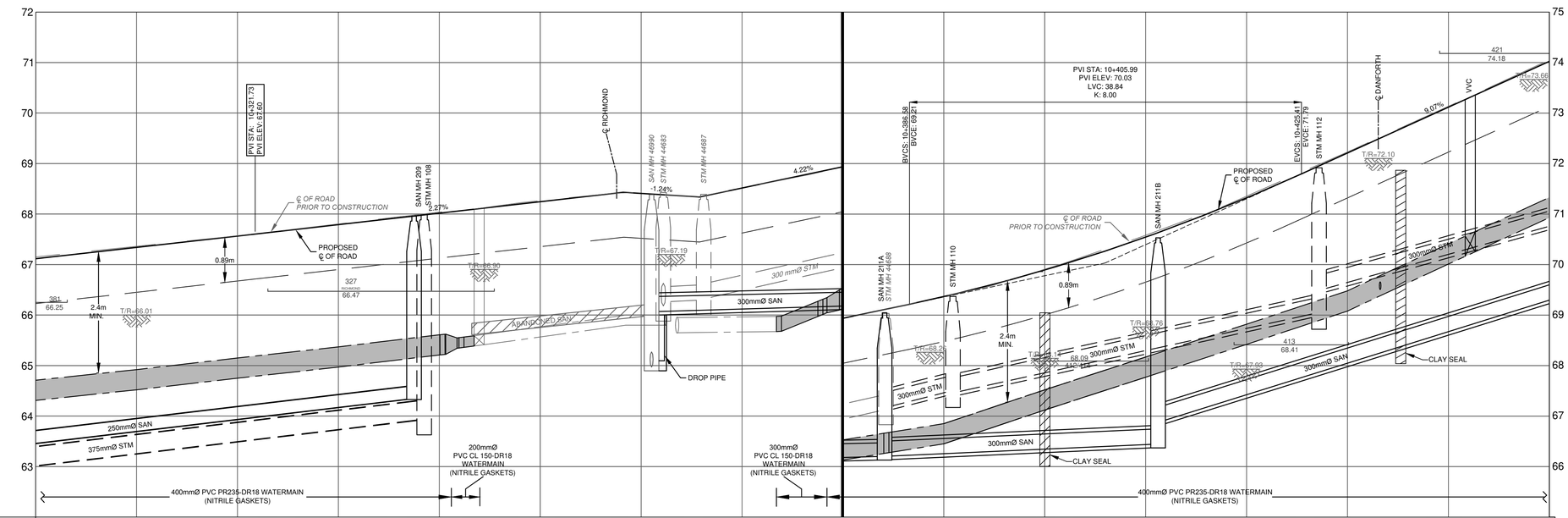

CATCH BASIN DATA						
NO.	STATION	OFFSET	COVER	STRUCTURE	ELEVATION	
					GUTTER	LOW/INV
CB 25	10+301.65	6.60 LT	S19	OPSD 705.010	67.02	65.62
CB 26	10+336.71	6.60 LT	S19	OPSD 705.010	67.81	66.41
CICB 27	10+337.69	6.60 RT	S22/S23	OPSD 705.010	67.89	66.49
CB 28	10+373.95	7.11 LT	S19	OPSD 705.020	68.59	67.19
CB 29	10+382.17	7.50 RT	S19	OPSD 705.020	68.96	67.56
CB 30	10+438.02	6.22 LT	S19	OPSD 705.010	72.8	71.4
CB 31	10+442.81	5.88 RT	S19	OPSD 705.020	73.25	71.85

OFFSETS ARE FROM CONTROL LINE TO FACE OF CURB FOR ALL CATCH BASINS

CATCH BASIN CONNECTION					
LOCATION	DIA. (mm)	TYPE	LENGTH (m)	INVERT ELEVATIONS	
				UPSTR.	DOWNSTR.*
CB 25 - PIPE	200	PVC SDR35	3.80	65.62	63.44
CB 26 - PIPE	200	PVC SDR35	3.80	66.41	64.25
CICB 27 - PIPE	200	PVC SDR35	9.35	66.49	64.25
CB 28 - PIPE	200	PVC SDR35	11.53	67.19	66.97
CB 29 - PIPE	200	PVC SDR35	2.09	67.56	67.34
CB 30 - PIPE	200	PVC SDR35	4.22	71.40	70.58
CB 31 - PIPE	200	PVC SDR35	6.98	71.85	70.84

* DOWNSTREAM ELEVATIONS SHOWN ARE AT THE OBVERT OF THE STORM SEWER (MIN. GRADE 1% FOR ALL STORM SEWER CONNECTIONS)

SANITARY MAINTENANCE HOLE DATA						
NO.	STATION 10+337.50	OFFSET	COVER	STRUCTURE	ELEVATION	
					T/GRATE	LOW/INV.
SAN MH209	~~10+341.91~~	3.85 LT	*S24	OPSD 701.010	67.98	~~64.35~~ 64.22
SAN MH211A	10+384.14	3.05 LT	*S24	OPSD 701.010	69.05	~~65.72~~ 66.20
SAN MH211B	10+411.24	3.05 LT	*S24	OPSD 701.010	70.53	~~68.59~~ 66.44

OFFSETS ARE FROM CONTROL LINE TO CENTRE OF STRUCTURE
STATIONS AND T/GRATE ELEVATIONS ARE FROM THE CENTRE OF STRUCTURE
* FRAME TO BE SELF-LEVELING BY MEULLER AJ745 OR BIBBY C54M

STORM MAINTENANCE HOLE DATA						
NO.	STATION 10+338.50	OFFSET	COVER	STRUCTURE	ELEVATION	
					T/GRATE	LOW/INV.
STM MH108	~~10+339.59~~	2.35 LT	*S24.1	OPSD 701.010	67.96	~~63.94~~ 63.92
STM MH110	10+390.91	1.55 LT	*S24.1	OPSD 701.010	69.37	~~67.55~~ 67.47
STM MH112	10+427.19	1.55 LT	*S24.1	OPSD 701.010	71.91	~~69.29~~ 69.02

OFFSETS ARE FROM CONTROL LINE TO CENTRE OF STRUCTURE
STATIONS AND T/GRATE ELEVATIONS ARE FROM THE CENTRE OF STRUCTURE
* FRAME TO BE SELF-LEVELING BY MEULLER AJ745 OR BIBBY C54M

SANITARY SEWER DATA						
SEWER		DIA.	LENGTH 60.59	TYPE	INVERT ELEVATIONS	
FROM	TO				UP STR.	DOWN STR.
SAN 209	SAN 207	250	~~85.00~~	PVC SDR-35	~~64.35~~	~~62.95~~ 62.93
SAN 211A	EX. MH	300	23.15	CONC CL 140-D	~~65.72~~	~~65.08~~ 66.07
SAN 211B	SAN 211A	300	27.10	CONC CL 140-D	~~68.59~~ 66.44	~~65.73~~ 66.21
SAN 213	SAN 211B	300	47.78	CONC CL 140-D	~~69.86~~ 69.72	~~67.09~~ 64.22 67.92 66.20

STORM SEWER DATA						
SEWER		DIA.	LENGTH (m)	TYPE	INVERT ELEVATIONS	
FROM	TO				UP STR.	DOWN STR.
STM 108	STM 106	375	~~64.25~~	PVC SDR-35	~~63.94~~	62.45
STM 110	EX. MH	300	~~8.79~~	CONC CL140-D	~~67.55~~	67.19
STM 112	STM 110	300	36.28	CONC CL 140-D	~~69.29~~ 63.16	~~67.59~~ 67.49 63.92 67.47
STM 114	STM 112	300	48.21	CONC CL 140-D	~~72.39~~ 8.51	~~69.79~~ 69.53 69.02 72.12

BUILDING SERVICE DATA						
ADDRESS	EXISTING			PROPOSED		
	STORM	SANITARY	COMBINED	STORM	SANITARY	COMBINED
~~408 CHURCHILL~~			X			X
412/414 CHURCH		X		X	X	
413 CHURCHILL		X			X	
421 CHURCHILL (SAN TO LINCOLN)		X			X	
327 RICHMOND (SAN TO CHURCHILL)		X			X	
332 RICHMOND	EXISTING SERVICING CONDITIONS TO BE DETERMINED IN THE FIELD					
337 RICHMOND	X	X		X	X	

~~408 CHURCHILL - SERVICING IMPROVEMENTS ARE NOT PROPOSED~~
~~421 CHURCHILL - NOT AFFECTED BY RECONSTRUCTION~~
337 RICHMOND - NOT AFFECTED BY RECONSTRUCTION

Drawing M:\2008\08056\CAD\design\asbuilt\Phase 1\ISB08-5000-PP-plt.dwg Layout:PP3.plt (06) Updated OCT 26, 201 at 3:52pm by rhiller

TITLE FRAME: 709mm x 534mm City of Ottawa 2008

Drawing:M:\2008\108058\CAD\design\asbuilt\Phase I\ISB08-5000-PP-ph1.dwg Layout:PP4-ph1 (017) Updated OCT 26, 2011 at 3:52pm by rhillier

CHURCHILL AVENUE

REHABILITATION
SCOTT STREET TO BYRON AVENUE

CHURCHILL
PLAN AND PROFILE
10+450 TO 10+600

Ottawa

Contract No. ISB08-5000 | Dwg. No. 017
Sheet 17 of 55

BRUCE MASON, P.Eng. — *Manager - Division*
TODD PENFOUND, C.E.T. — *Project Manager*

Asset No.
Asset Group: ISB
Des: NTQ | Chk'd: ERD
Dwn: RCH | Chk'd: DHI
Utility Circ. No.:
Const. Inspector:
Scale: HORIZONTAL 0m 5 10; 0m 1 2 VERTICAL

NOTE:
The location of utilities is approximate only, the exact location should be determined by consulting the municipal authorities and utility companies concerned. The contractor shall prove the location of utilities and shall be responsible for adequate protection from damage.

NOVATECH ENGINEERING CONSULTANTS LTD. ENGINEERS & PLANNERS
Suite 200, 240 Michael Cowpland Drive Kanata, Ontario, Canada K2M 1P6
Telephone (613) 254-9643
Facsimile (613) 254-5867
Email novainfo@novatech-eng.com

REVISIONS

No.	Description	By	Date
1.	ISSUED FOR PRELIMINARY DESIGN CIRCULATION	ERD	07/10/09
2.	ISSUED FOR MOE APPROVAL	ERD	07/24/09
3.	ISSUED FOR TENDER	ERD	11/06/09
4.	ISSUED FOR DESIGN CIRCULATION	ERD	11/06/09
5.	ISSUED FOR CONSTRUCTION	ERD	03/09/10
6.	AS-BUILT	ERD	04/12/12

CATCH BASIN DATA

NO.	STATION	OFFSET	COVER	STRUCTURE	ELEVATION	
					GUTTER	LOW/INV.
CICB 32	10+496.72	5.88 LT	S22/S23	OPSD 705.020	76.93	75.53
CB 33	10+496.72	5.88 RT	S19	OPSD 705.020	76.93	75.53

OFFSETS ARE FROM CONTROL LINE TO FACE OF CURB FOR ALL CATCH BASINS

CATCH BASIN CONNECTION

LOCATION	DIA. (mm)	TYPE	LENGTH (m)	INVERT ELEVATIONS	
				UPSTR.	DOWNSTR.*
CICB 32 - PIPE	200	PVC SDR35	4.70	75.53	73.92
CB 33 - PIPE	200	PVC SDR35	7.00	75.53	73.92

* DOWNSTREAM ELEVATIONS SHOWN ARE AT THE OBVERT OF THE STORM SEWER (MIN. GRADE 1% FOR ALL STORM SEWER CONNECTIONS)

SANITARY MAINTENANCE HOLE DATA

NO.	STATION	OFFSET	COVER	STRUCTURE	ELEVATION		
					T/GRATE	LOW/INV.	
SAN MH213	10+459.02	3.05 LT	*S24	OPSD 701.010	74.75	~~69.86~~	69.72
SAN MH215B	~~10+498.47~~ 10+498.50	10.67 LT	*S24	OPSD 701.010	77.24	74.51	
SAN MH215A	~~10+504.17~~ 10+498.60	3.07 LT	*S24	OPSD 701.010	77.27	~~74.63~~	74.55
~~SAN MH T-A~~	~~10+515.65~~	~~3.07 LT~~	~~*S24~~	~~OPSD 701.010~~	~~77.72#~~	~~74.82~~	
~~SAN MH T-B~~	~~10+521.49~~	~~4.38 LT~~	~~*S24~~	~~OPSD 701.010~~	~~77.88#~~	~~74.90~~	

OFFSETS ARE FROM CONTROL LINE TO CENTRE OF STRUCTURE
STATIONS AND T/GRATE ELEVATIONS ARE FROM THE CENTRE OF STRUCTURE
* FRAME TO BE SELF-LEVELING BY MEULLER AJ745 OR BIBBY C54M
# T/GRATE ELEVATION TO BE SET IN FEILD TO MATCH SURFACE ELEVATION IN TEMPORARY TRANSITION AREA

STORM MAINTENANCE HOLE DATA

NO.	STATION	OFFSET	COVER	STRUCTURE	ELEVATION		
					T/GRATE	LOW/INV.	
STM MH114	10+475.40	1.55 LT	*S24.1	OPSD 701.010	75.95	~~72.30~~	72.12
STM MH118	~~10+518.52~~ 10+511.30	1.57 LT	*S24.1	OPSD 701.010	77.71#	~~74.40~~	73.90

OFFSETS ARE FROM CONTROL LINE TO CENTRE OF STRUCTURE
STATIONS AND T/GRATE ELEVATIONS ARE FROM THE CENTRE OF STRUCTURE
* FRAME TO BE SELF-LEVELING BY MEULLER AJ745 OR BIBBY C54M
# T/GRATE ELEVATION TO BE SET IN FEILD TO MATCH SURFACE ELEVATION IN TEMPORARY TRANSITION AREA

SANITARY SEWER DATA

SEWER		DIA.	LENGTH	TYPE	INVERT ELEVATIONS		
FROM	TO				UP STR.	DOWN STR.	
SAN 213	SAN 211B	300	47.78	CONC CL 140-D	~~69.86~~ 69.72	~~67.00~~	66.92
~~SAN 215A~~	~~SAN 215B~~	~~250~~	~~9.50~~	~~PVC SDR-35~~	~~74.63~~	~~74.54~~	
~~TEMP SAN A~~	SAN 215A	250	~~11.48~~ 12.40	PVC SDR-35	74.82	~~74.66~~	74.58
~~TEMP SAN B~~	~~TEMP SAN A~~	~~250~~	~~5.99~~	~~PVC SDR-35~~	~~74.90~~	~~74.83~~	

STORM SEWER DATA

SEWER		DIA.	LENGTH (m)	TYPE	INVERT ELEVATIONS		
FROM	TO				UP STR.	DOWN STR.	
STM 114	STM 112	300	48.21	CONC CL 140-D	~~72.30~~ 72.12	~~69.70~~	69.53
STM 118	STM 114	300	~~43.12~~ 37.40	CONC CL 140-D	~~74.40~~ 73.90	~~72.85~~	72.63

BUILDING SERVICE DATA

ADDRESS	EXISTING			PROPOSED		
	STORM	SANITARY	COMBINED	STORM	SANITARY	COMBINED
424 CHURCHILL		X			X	
~~430 CHURCHILL~~		~~X~~			~~X~~	

TITLE FRAME: 709mm x 534mm City of Ottawa 2008

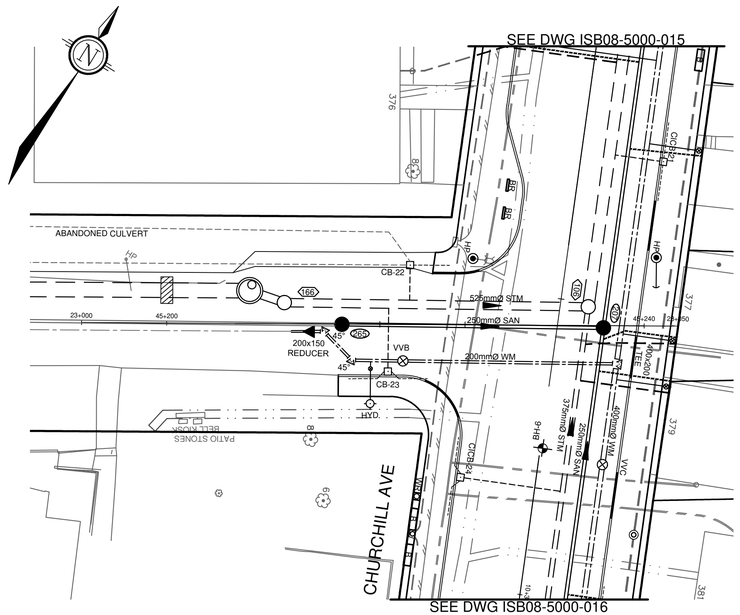

MADISON AVENUE

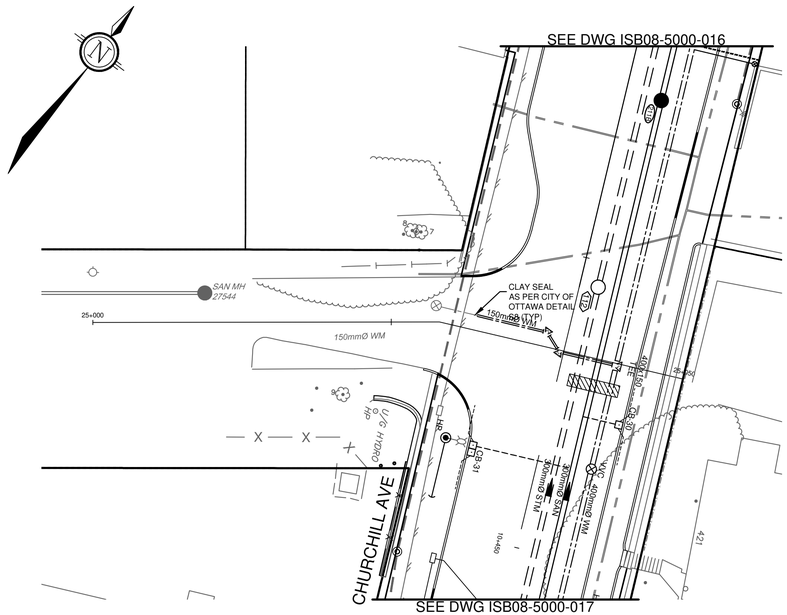

DANFORTH AVENUE

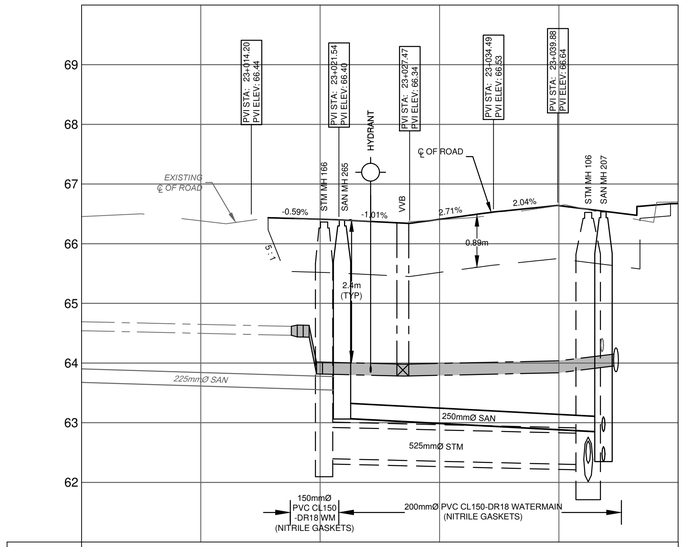

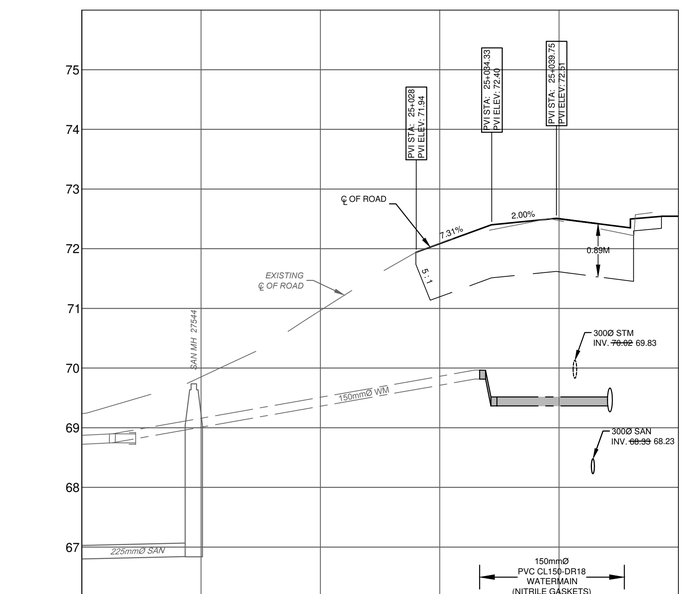

CHURCHILL AVENUE
REHABILITATION
SCOTT STREET TO BYRON AVENUE

PLAN AND PROFILE
MADISON 23+000 TO 23+050
DANFORTH 25+000 TO 25+050

BRUCE MASON, P.Eng. *Manager - Division*	TODD PENFOUND, C.E.T. *Project Manager*

Ottawa

Contract No. ISB08-5000	Dwg. No. 023
Sheet 23 of 55	
Asset No.	
Asset Group: ISB	
Des: NTQ	Chk'd: ERD
Dwn: RCH	Chk'd: DHI
Utility Circ. No.:	
Const. Inspector:	
Scale: HORIZONTAL 0m 5 10 / 0m 1 2 VERTICAL	

NOTE:
The location of utilities is approximate only, the exact location should be determined by consulting the municipal authorities and utility companies concerned. The contractor shall prove the location of utilities and shall be responsible for adequate protection from damage.

NOVATECH ENGINEERS

REVISIONS

No.	Description	By	Date
1.	ISSUED FOR PRELIMINARY DESIGN CIRCULATION	ERD	07/10/09
2.	ISSUED FOR MOE APPROVAL	ERD	07/24/09
3.	ISSUED FOR TENDER	ERD	11/06/09
4.	ISSUED FOR DESIGN CIRCULATION	ERD	11/06/09
5.	ISSUED FOR CONSTRUCTION	ERD	03/09/10
6.	ADDED CB23 / REVISED PROFILE	ERD	08/19/10
7.	AS-BUILT	ERD	04/12/12

CATCH BASIN DATA

NO.	STATION	OFFSET	COVER	STRUCTURE	ELEVATION	
					GUTTER	LOW/INV.
CB 22	23+027.50	5.00 LT	S19	OPSD 705.010	66.20	64.8
CB 23	23+025.71	4.25 RT	S19	OPSD 705.010	66.47	65.07

OFFSET IS FROM CONTROL LINE TO CENTRE OF CATCHBASIN

CATCH BASIN CONNECTION

LOCATION	DIA. (mm)	TYPE	LENGTH (m)	INVERT ELEVATIONS	
				UPSTR.	DOWNSTR.*
CICB 22 - PIPE	200	PVC SDR35	3.20	64.94	62.95
CICB 23 - PIPE	200	PVC SDR35	5.65	65.21	62.93

* DOWNSTREAM ELEVATIONS SHOWN ARE AT THE OBVERT OF THE STORM SEWER (MIN. GRADE 1% FOR ALL STORM SEWER CONNECTIONS)

SANITARY MAINTENANCE HOLE DATA

NO.	STATION	OFFSET	COVER	STRUCTURE	ELEVATION	
					T/GRATE	LOW/INV.
SAN MH265	23+020.24	0.01 RT	*S24	OPSD 701.010	66.41	63.07

OFFSETS ARE FROM CONTROL LINE TO CENTRE OF STRUCTURE
STATIONS AND T/GRATE ELEVATIONS ARE FROM THE CENTRE OF STRUCTURE
* FRAME TO BE SELF-LEVELING BY MEULLER AJ745 OR BIBBY C54M

STORM MAINTENANCE HOLE DATA

NO.	STATION	OFFSET	COVER	STRUCTURE	ELEVATION	
					T/GRATE	LOW/INV.
STM MH166	23+016.98	1.77 LT	*S24.1	OPSD 701.010	66.39	62.48

OFFSETS ARE FROM CONTROL LINE TO CENTRE OF STRUCTURE
STATIONS AND T/GRATE ELEVATIONS ARE FROM THE CENTRE OF STRUCTURE
* FRAME TO BE SELF-LEVELING BY MEULLER AJ745 OR BIBBY C54M

SANITARY SEWER DATA

SEWER		DIA.	LENGTH	TYPE	INVERT ELEVATIONS	
FROM	TO				UP STR.	DOWN STR.
SAN 265	SAN 207	250	23.50	PVC SDR-35	63.07	62.95

STORM SEWER DATA

SEWER		DIA.	LENGTH (m)	TYPE	INVERT ELEVATIONS	
FROM	TO				UP STR.	DOWN STR.
STM 166	STM 106	525	25.48	CONC CL 140-D	62.48	62.30

Drawing:M:\2008\08058\CAD\design\rsbuild\Phase 1\ISB08-5000-PP-plt.dwg Layout:PP02-plt (023) Updated OCT 29, 2011 at 3:39pm by rhiller

APPENDIX G

Fire Hydrant Coverage

FIRE HYDRANTS LOCATIONS

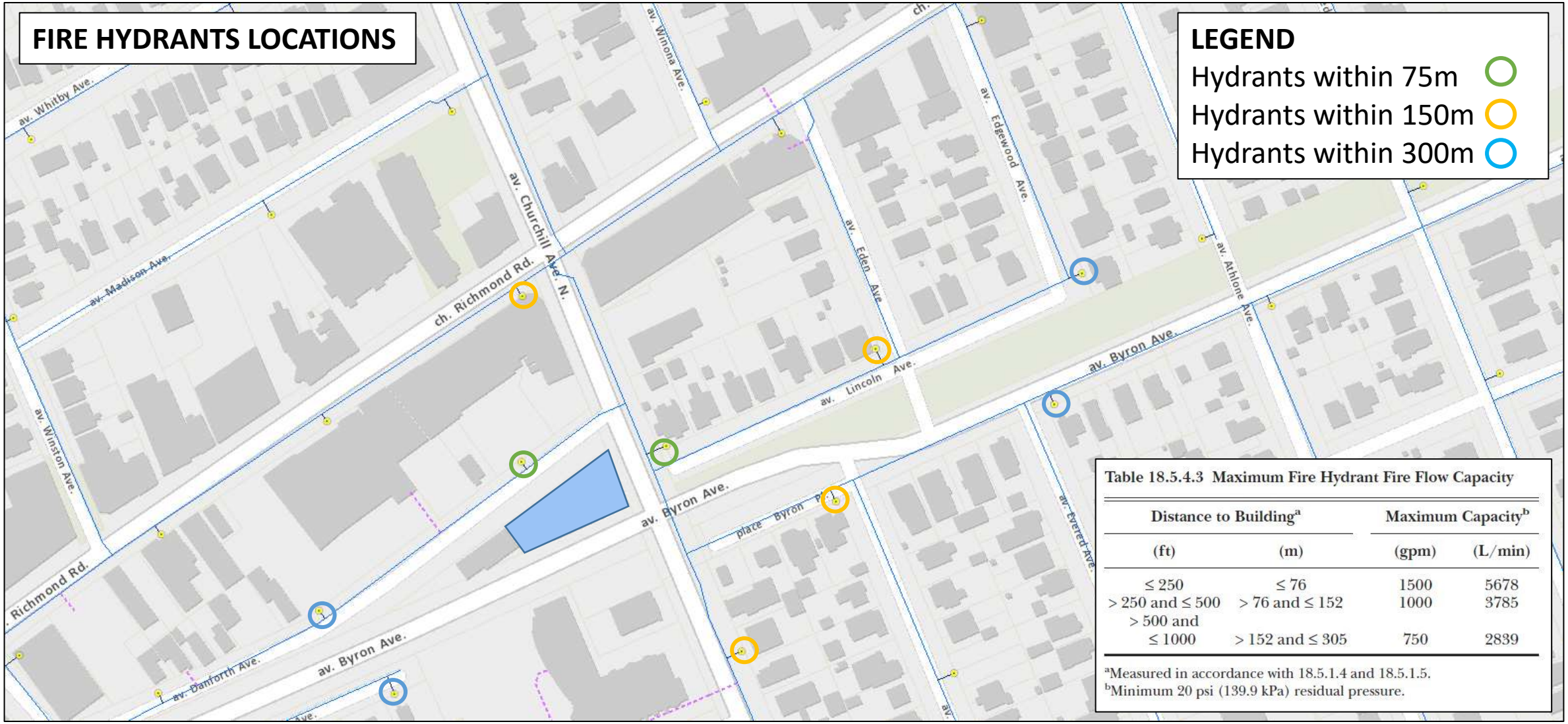

Table 18.5.4.3 Maximum Fire Hydrant Fire Flow Capacity

Distance to Building[a]		Maximum Capacity[b]	
(ft)	(m)	(gpm)	(L/min)
≤ 250	≤ 76	1500	5678
> 250 and ≤ 500	> 76 and ≤ 152	1000	3785
> 500 and ≤ 1000	> 152 and ≤ 305	750	2839

[a]Measured in accordance with 18.5.1.4 and 18.5.1.5.
[b]Minimum 20 psi (139.9 kPa) residual pressure.