D01 - GENERAL

D01-1 GENERAL INFORMATION

1. THE INFORMATION PRESENTED ON THESE DRAWINGS HAS BEEN DESIGNED AND ANALYZED IN ACCORDANCE WITH THE 2012 ONTARIO BUILDING CODE AS AMENDED JANUARY 1, 2020. CONSTRUCTION IS TO BE PERFORMED IN ACCORDANCE WITH THIS AND ALL OTHER APPLICABLE CODES.
   - ■ 1.1 CONCRETE STRUCTURE DESIGNED IN ACCORDANCE WITH CSA A23.3-14
   - ■ 1.2 STEEL STRUCTURE DESIGNED IN ACCORDANCE WITH CSA-S16-14
2. CONTRACTOR IS TO VERIFY/COORDINATE ALL DIMENSIONS/PENETRATIONS WITH ARCHITECTURAL/MECHANICAL/ELECTRICAL DRAWINGS PRIOR TO CONSTRUCTION. REPORT INCONSISTENCIES BEFORE PROCEEDING WITH WORK. ANY OPENINGS NOT INDICATED ON STRUCTURAL DRAWINGS ARE TO BE APPROVED BY STRUCTURAL ENGINEER IN WRITING PRIOR TO CONSTRUCTION.
3. DEMOLITION DETAILS THAT AFFECT THE STRUCTURAL ELEMENTS HAVE BEEN REVIEWED IN ACCORDANCE WITH PARTS 2,4,10 AND 11 OF THE 2012 ONTARIO BUILDING CODE AS AMENDED JAN 01, 2020. WHERE REQUIRED, SUPPLEMENTARY/TEMPORARY/REMEDIAL FRAMING HAS BEEN PROVIDED.
4. SEISMIC RESTRAINT OF ARCH/MECH/ELECT ELEMENTS NOT NOTED ON THE DRAWINGS ARE THE RESPONSIBILITY OF THE CONTRACTOR'S ENGINEER. RESTRAINT DETAILS ARE TO BE DEVELOPED IN ACCORDANCE WITH THE 2012 OBC. CONTRACTOR'S ENGINEER IS RESPONSIBLE FOR THE DESIGN AND DETAILING OF SEISMIC RESTRAINTS AND ISOLATIONS AS REQUIRED BY SPECIFICATIONS INCLUDING THE VERIFICATION THAT THE EXISTING/NEW STRUCTURE IS CAPABLE OF SAFELY SUPPORTING THE IMPOSED LOADS IN ACCORDANCE WITH THE 2012 OBC. NO ELEMENTS MAY BE CONSTRUCTED WITHOUT WRITTEN CONFIRMATION OF THESE CONDITIONS BY CONTRACTOR'S ENGINEER.
5. NO FOUNDATION ELEMENTS ARE TO BE CONSTRUCTED UNTIL WRITTEN APPROVAL OF THE BEARING SURFACES AND PRESSURES IS PROVIDED BY A GEOTECHNICAL ENGINEER THROUGH ON-SITE INVESTIGATION. FAILURE TO COMPLETE THIS WORK COULD RESULT IN THE REMOVAL/REINSTATEMENT OF ANY/ALL FOUNDATION ELEMENTS AT CONTRACTOR'S OWN COST.
6. DRAWINGS SHOW COMPLETED STRUCTURE ONLY. CONTRACTOR TO PROVIDE PRE-ENGINEERED SHORING AS REQUIRED TO ACCOMMODATE THE CONTRACTOR'S CONSTRUCTION ACTIVITIES AND TO PREVENT DAMAGE TO ANY ADJACENT PROPERTY. ALL CONSTRUCTION ACTIVITIES TO BE LIMITED TO THE LIMITS OF THE CONSTRUCTION SITE AND ALL DAMAGE TO EXISTING PROPERTIES MUST BE REINSTATED.
7. CONTRACTOR IS RESPONSIBLE FOR CO-ORDINATING & TIMING OF THE CONSTRUCTION WITH RESPECT TO THE VARIOUS TRADES.
8. PROPRIETARY SYSTEMS ARE TO BE INSTALLED IN STRICT ACCORDANCE WITH MANUFACTURER'S RECOMMENDATIONS.
9. DO NOT SCALE THESE DRAWINGS.
10. DETAILS OF CONSTRUCTION ARE SHOWN BASED ON INFORMATION AVAILABLE AT THE TIME OF PREPARING DESIGN DRAWINGS. IF, DURING CONSTRUCTION, CONDITIONS ARE REVEALED THAT DIFFER FROM THE ASSUMED CONDITIONS, ADVISE THE CONSULTANT BEFORE PROCEEDING.
11. VERIFY ALL DIMENSIONS AND EXISTING CONDITIONS ON SITE PRIOR TO FABRICATION.

D01-2 DEMOLITION

1. CONTRACTOR TO SCAN FOR ALL SERVICES AND CALL FOR LOCATES PRIOR TO DEMOLITION.
2. CONTRACTOR SHALL EXERCISE EXTREME CAUTION WHILE DEMOLISHING EXISTING STRUCTURE AS TO NOT DAMAGE THOSE PORTIONS OF THE STRUCTURE THAT ARE TO REMAIN.
3. CONTRACTOR SHALL MAKE GOOD, TO THE SATISFACTION OF THE CONSULTANT, ANY DAMAGE THAT OCCURS DUE TO THE DEMOLITION PHASE.
4. ALL DEMOLISHED MATERIALS MUST BE DISPOSED OF OFF-SITE AT THE END OF EACH WORKING DAY.

D01-3 GRAVITY LOADS:

SLS/ULS VALUES:

SNOW: I_S: ULS=1.0 SLS=0.9
WIND: I_W: ULS=1.0 SLS=0.75
SEISMIC: I_E: ULS=1.0

SNOW LOAD FACTORS:

$S = I_S [S_s(C_b \cdot C_w \cdot C_s \cdot C_a) + S_r]$
Ss = 2.5 KPa
Sr = 0.4 KPa
Cb = 0.8
Cw = 1.0
Cs = 1.0

ROOF:

DEAD:
ROOFING: 0.40
STEEL DECK: 0.10
STRUCT. STEEL: 0.25
M&E.: 0.25
CEILING: 0.20
1.20 KPa

LIVE:
ROOF: 1.0 KPa
SNOW: 2.40 KPa (+ DRIFT) U/N

D01-4 SEISMIC SYSTEM/LOADING DATA

- SEISMIC FORCE RESISTING SYSTEM (SFRS)

  SFRS: SYSTEM & CONNECTIONS: (2012 OBC CLAUSE 4.1.8.9/4.1.8.10)
  LATERAL LOAD RESISTING SYSTEM: CONVENTIONAL CONSTRUCTION - STEEL BRACED FRAMES
  Rd = 1.5
  Ro = 1.3
- SEISMIC IMPORTANCE FACTOR: (2012 OBC CLAUSE 4.1.8.5)
  I_E = 1.0
- REFERENCE CITY: OTTAWA (KANATA)
- SITE CLASS: THE NOTED SITE CLASSIFICATION FOR SEISMIC SITE RESPONSE AND SHEAR STRENGTH PARAMETERS INDICATED ARE ASSUMED AND ARE TO BE CONFIRMED BY A GEOTECHNICAL ENGINEER LICENSED TO PRACTICE IN ONTARIO IN WRITING, PRIOR TO CONSTRUCTION.
  ☐ A ☐ B ■ C ☐ D ☐ E ☐ F
- RESPONSE SPECTRUM DATA:
- 5% DAMPED SPECTRAL RESPONSE ACCELERATION VALUES FOR REFERENCE CITY: (2015 NBC APPENDIX C)
  Sa(0.2) = 0.401
  Sa(0.5) = 0.218
  Sa(1.0) = 0.110
  Sa(2.0) = 0.053
  Sa(5.0) = 0.014
  Sa(10.0) = 0.0053
- PEAK GROUND ACCELERATION (2015 NBC APPENDIX C)
  PGA = 0.257
- DESIGN SPECTRAL RESPONSE ACCELERATION VALUES (DSRAV): (2012 OBC CLAUSE 4.1.8.4)

  ■ CLASS 'C': (PGA_{ref}=2.06)
  S(0) = 0.401
  S(0.2) = 0.401
  S(0.5) = 0.218
  S(1.0) = 0.110
  S(2.0) = 0.053
  S(5.0) = 0.014
  S(10.0) = 0.005
- SYSTEM RESTRICTION VALUE: $I_E F_a S_a(0.2) = 0.50 \geq 0.35$ ■ YES ☐ NO
- FUNDAMENTAL PERIOD: (2012 OBC CLAUSE 4.1.8.11.(4)
  $T_{a\,NS}$ = 0.17 sec
  $T_{a\,EW}$ = 0.21 sec
- DESIGN FUNDAMENTAL PERIOD:
  $S(T_a)_{NS}$ = 0.401
  $S(T_a)_{EW}$ = 0.395
- STRUCTURAL SEPARATION: ■ THE ADJACENT STRUCTURES HAVE BEEN SEPARATED IN ACCORDANCE WITH 4.1.8.14(1) OF THE 2012 O.B.C. ☐ N/A
- BUILDING WEIGHT FOR SEISMIC DESIGN: W = 251 kN
- BASE SHEARS:
  $V_{STATIC} = S(T_a)M_V I_E W/(R_d R_o) = 0.206 \cdot W$
- STATIC MAXIMUM/MINIMUM VALUES:
  $V_{MIN} = S(2.0)M_V I_E W/(R_d R_o) = 0.027 \cdot W$
  $V_{MAX} \geq \left(\frac{2/3\, S(0.2) I_E W/(R_d R_o)}{S(0.5) I_E W/(R_d R_o)}\right) = 0.137 \cdot W = 34.4kN$

D01-5 WIND LOADING:

WIND: (PRIMARY STRUCTURAL)
q= 0.41 KPa
(1 IN 50 YEARS)
I_W = 1.0 (ULS)
I_W = 0.75 (SLS)
C_pC_g = 1.3 (2.0 AT ENDS)
DESIGN = 0.76 KPA
C_e = 0.9
SEE ROOF PLAN FOR WIND UPLIFT

NORTH-SOUTH: (↔)
Vbase = 25 KN
Mbase = 102 KN•m

EAST-WEST: (↕)
Vbase = 10 KN
Mbase = 42 KN•m

WIND: (INDIVIDUAL WALLS)
I_W = 1.0 (ULS)
I_W = 0.75 (SLS)
C_pC_g = +1.6 TO -2.0
C_e = 0.9
C_{gi} = 2.0
C_{pi} = -0.45 TO +0.3
p = 1.34 kPa (ULS)
0.72 kPa (SLS)

WIND LOADS: WIND UPLIFT (NET FACTORED)

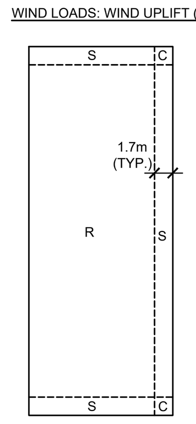

R = 0.78 kPa (FIELD)
S = 0.96 kPa (EDGE)
C = 0.96 kPa (CORNERS)
z = 1.7 m
CANOPIES = 0.74 kPa (TYP.)

D01-6 DEFINITIONS:

THE FOLLOWING ABBREVIATIONS HAVE BEEN USED IN THESE NOTES AND DRAWINGS:

@	AT (SPACING c/c)	mm	MILLIMETRES
ARCH.	ARCHITECTURAL	MAX.	MAXIMUM
B	BOTTOM	MECH	MECHANICAL
BLL	BOTTOM LOWER LAYER	MIN.	MINIMUM
BUL	BOTTOM UPPER LAYER	NF	NEAR FACE
c/c	CENTRE TO CENTRE	NTS	NOT TO SCALE
℄	CENTRE LINE	OF	OUTSIDE FACE
CONT.	CONTINUOUS	PCO	PILE CUT-OFF
CW	CORE WALL	℞	PLATE
EA.	EACH	R.D.	ROOF DRAIN
EE	EACH END	SMR	STANDARD GALVANIZED LADDER MASONRY REINFORCEMENTS
EF	EACH FACE	SW	SHEARWALL
EL.	ELEVATION	T	TOP
ES	EACH SIDE	T.J.	TIE JOIST
EW	EACH WAY	TLL	TOP LOWER LAYER
FF	FAR FACE	TUL	TOP UPPER LAYER
H, HOR.	HORIZONTAL	TOPC	TOP OF PILE CAP
HDMR	HEAVY DUTY GALVANIZED TRUSS TYPE MASONRY REINFORCEMENT	TYP.	TYPICAL
IF	INSIDE FACE	U/N	UNLESS OTHERWISE NOTED
LL	LOWER LAYER	UL	UPPER LAYER
m	METRES	U/S	UNDERSIDE
		V,VERT.	VERTICAL

D01-7 SHOP DRAWINGS

1. SUBMIT SHOP DRAWINGS FOR ALL STRUCTURAL WORK AND ANY WORK AFFECTING THE STRUCTURE TO THE CONSTRUCTION MANAGER. OBTAIN ARCHITECT'S & ENGINEER'S APPROVAL BEFORE PROCEEDING WITH THE FABRICATION.
2. EACH OF THE FOLLOWING SHOP DRAWINGS MUST BEAR THE SIGNATURE AND STAMP OF A QUALIFIED PROFESSIONAL ENGINEER REGISTERED IN THE PROVINCE (PLUS OTHER DRAWINGS AS NOTED).
   a) DRAWINGS FOR ANY TEMPORARY WORK, INCLUDING SHORING OF EXISTING STRUCTURE DESIGNED BY THE CONTRACTOR'S FORCES
   b) DRAWINGS FOR ANY STRUCTURAL PARTS
   c) STRUCTURAL STEEL
   d) OPEN WEB STEEL JOISTS "OWSJ"
   e) STEEL TO STEEL CONNECTIONS.
3. SHOP DRAWINGS MUST BE REVIEWED AND STAMPED REVIEWED BY THE CONTRACTOR BEFORE ISSUING TO THE ARCHITECT/ENGINEER. SHOP DRAWINGS NOT STAMPED BY THE CONTRACTOR WILL BE REJECTED. ANY DELAYS IN THE CONSTRUCTION SCHEDULE DUE TO NONCOMPLIANCE WITH THIS REQUIREMENT SHALL BE THE RESPONSIBILITY OF THE CONTRACTOR.
4. SUBMIT STEEL JOIST AND STEEL DECK SHOP DRAWINGS FOR STRUCTURAL ENGINEER'S REVIEW BEFORE FABRICATION.
5. SHOP DRAWINGS ARE REVIEWED FOR CONFORMANCE WITH THE GENERAL DESIGN CONCEPT. THIS REVIEW DOES NOT IMPLY APPROVAL OF THE DETAILED DESIGN OR QUANTITIES DESCRIBED IN THE SHOP DRAWINGS. THE RESPONSIBILITY FOR THE QUANTITIES AND DETAILED DESIGN OF THE MATERIALS AND COMPONENTS AS REQUIRED TO PROVIDE THE COMPLETE AND SATISFACTORY JOB DESCRIBED IN THE DESIGN DOCUMENTS REMAINS WITH THE CONTRACTOR.

D02) EXCAVATION, FOUNDATIONS, AND BACKFILL

D02-1 FOOTINGS:

ALL FOOTINGS TO BEAR ON UNDISTURBED NATIVE MATERIAL WITH MINIMUM ALLOWABLE BEARING STRENGTHS AS NOTED AND AS PROVIDED BY GEOTECHNICAL ENGINEER ON SITE.
REFERENCE GEOTECHNICAL REPORT: PG6018-1 (DATED NOVEMBER 30, 2021) REPORT AUTHOR: PATERSON GROUP INC.

D02-2 EXCAVATION AND BACKFILL:

REFER TO GEOTECHNICAL REPORT AS INDICATED IN D31-1

1. PRIOR TO ANY EXCAVATION, VERIFY LOCATION OF EXISTING SERVICES AND TAKE ALL NECESSARY MEASURES TO MAINTAIN SERVICES WHERE REQUIRED. NOTIFY OWNER AND CONSULTANT IF ANY SERVICES NOT SHOWN ON PLAN OR OTHERWISE EXPECTED ARE ENCOUNTERED. DO NOT PROCEED FURTHER UNTIL DIRECTED.
2. CARE MUST BE TAKEN TO AVOID UNDERMINING EXISTING BUILDING FOUNDATIONS OR UNDERGROUND SERVICES.
3. PROTECT SUB-GRADE FROM FREEZING AND FROST ACTION AT ALL TIMES DURING CONSTRUCTION.
4. FOOTINGS MUST BEAR ON APPROVED BEARING SURFACES.
5. BACKFILL TO WITHIN 200mm OF UNDERSIDE OF SLAB WITH GRANULAR 'B' TYPE II IN LAYERS UP TO 300mm THICK, COMPACTED TO MINIMUM 100% SPMDD
6. FINAL 200mm UNDER SLAB TO BE GRANULAR 'A' COMPACTED TO MINIMUM 100% SPMDD
7. RE-USE OF EXCAVATED GRANULAR MATERIAL IS SUBJECT TO APPROVAL OF A GEOTECHNICAL CONSULTANT.
8. CONTRACTOR TO RETAIN THE SERVICES OF A GEOTECHNICAL ENGINEER TO PROVIDE WRITTEN CONFORMATION OF THE COMPACTED GRANULAR MATERIAL WAS INSTALL AS SPECIFIED FOR REVIEW AND APPROVAL.

D02-3 PROTECT LATERAL STABILITY OF BEARING STRATA UNLESS NOTED:

UNLESS OTHERWISE OUTLINED IN GEOTECTNICAL REPORT DO NOT EXCAVATE BELOW A LINE EXTENDING DOWNWARD FROM ANY BEARING STRATA AT A SLOPE OF 1 VERTICAL TO 2 HORIZONTAL. ADJUST FOOTING AND TRENCH ELEVATIONS TO MEET THIS REQUIREMENT (SEE DIAGRAM).

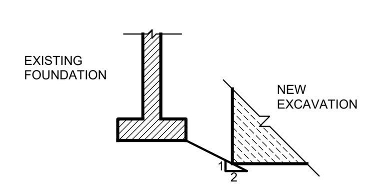

D02-5 ALTERNATE FROST COVER DETAIL

(NOTE: ONLY TO BE USED AFTER WRITTEN APPROVAL BY ENGINEER/WHERE GEOTECHNICAL REPORT REQUIRES MORE SOIL COVER/EXTENTS OF INSULATION, SOILS REPORT GOVERNS)

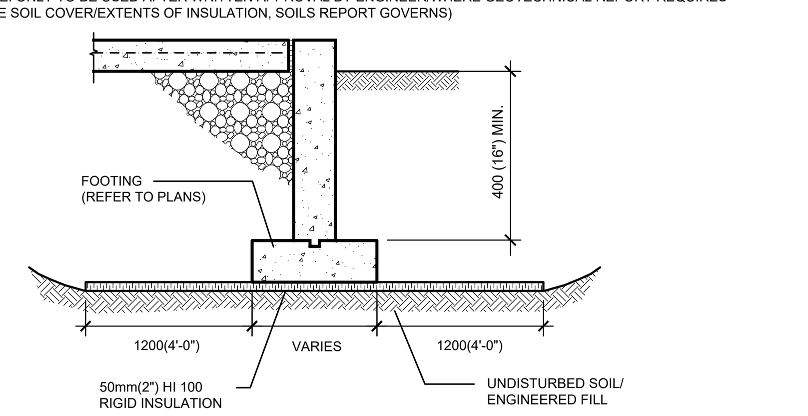

D02-6 PIPE CROSSING BELOW STRIP FOOTING:

(NOTE: LOCATIONS WHERE PIPES CROSS BELOW FOOTINGS ARE TO BE APPROVED BY ENGINEER IN WRITING PRIOR TO CONSTRUCTION. ENGINEER RESERVES THE RIGHT TO RELOCATE PIPES AS REQUIRED OR LOWER FOOTINGS TO SUIT.)

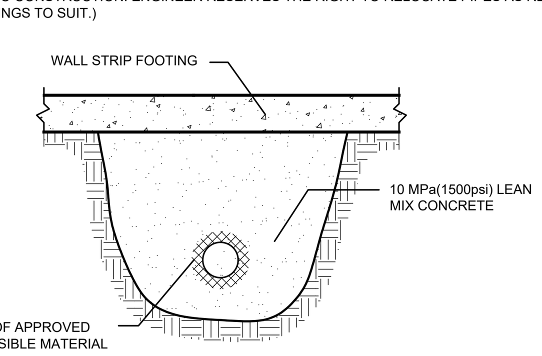

D03) CONCRETE

D03-1 CONCRETE COVER (CLEAR TO REINFORCING):

U/S FOOTINGS, AND SLAB ON GRADE (AGAINST SOIL)	75mm
FOOTINGS AND SLAB ON GRADE (SIDES & TOP)	50mm
FOUNDATION WALLS	50mm

D03-2 CONCRETE REINFORCING STEEL:

1. REINFORCING TO BE GRADE 400W DEFORMED BARS TO CSA-G30.18.
2. SPACING OF BARS SHALL BE APPROXIMATELY UNIFORM WITHIN THE CONCRETE ELEMENTS. DO NOT ELIMINATE OR DISPLACE REINFORCEMENT TO ACCOMMODATE HARDWARE. OBTAIN APPROVAL OF ALL MODIFICATIONS FROM ENGINEER BEFORE THE PLACING OF CONCRETE.
3. ALL LAPS AND EMBEDMENT OF DOWELS SHALL BE 40 BAR DIAMETERS, BUT NOT LESS THAN 600mm IF NOT SPECIFIED OTHERWISE. WIRE MESH LAPS SHALL BE 150mm MINIMUM.
4. BAR DESIGNATION:

   METRIC: 10-15M MEANS 10 BARS, SIZE 15M,
5. PROVIDE STANDARD HOOKS WHERE TOP AND BOTTOM BARS TERMINATE AT EDGES.
6. ALL DOWELS TO BE IN LINE WITH THE VERTICAL OF HORIZONTAL STEEL WITHIN THE STRUCTURAL ELEMENT UNLESS OTHERWISE NOTED
7. DETAIL, FABRICATE AND PLACE ALL REINFORCEMENT IN CONFORMITY TO CURRENT MANUAL OF STANDAD PRACTICE FOR DETAILING REINFORCED CONCRETE STRUCTURES ACI 315, CSA-A23.3 - LATEST EDITION AND REINFORCING STEEL MANUAL OF STANDARD PRACTICE BY RSIO.
8. ALL REINFORCING STEEL TO BE CHAIRED AND SECURELY TIED IN PLACE USING STANDARD TIES AND CHAIRS TO THE REQUIRED COVER FOR EXPOSED CONCRETE. CHAIRS AND BOLTERS TO BE PLASTIC TIPPED OR STAINLESS STEEL.
9. SUBMIT REINFORCING SHOP DRAWINGS FOR STRUCTURAL ENGINEER REVIEW PRIOR TO FABRICATION.

D03-3 HORIZONTAL WALL STEEL DETAIL AT CORNERS U/N: (NON-SHEAR WALL LOCATIONS)

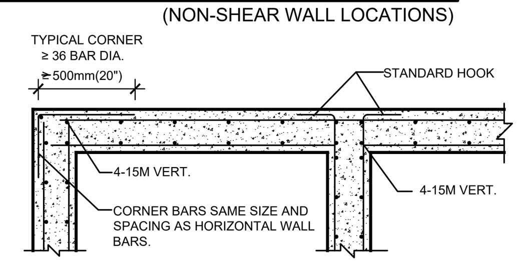

D03-4 CONCRETE MIXES

PROPORTION NORMAL DENSITY CONCRETE IN ACCORDANCE WITH CSA-A23.1, TO GIVE THE FOLLOWING QUALITY FOR ALL CONCRETE AS INDICATED.

LOCATION	28 DAY STRENGTH	SLUMP	CLASS OF EXPOSURE
THICKENED SLAB ON GRADE	35 MPa (5100 psi)	75mm (3")	C-1
RETAINING WALLS	35 MPa (5100 psi)	75mm (3")	C-1
FOOTINGS	35 MPa (5100 psi)	75mm (3")	C-1

* REFER TO CSA A23.1 FOR THE MAXIMUM WATER/CEMENT RATIO, MINIMUM COMPRESSIVE STRENGTH, AIR CONTENT, CURING REQUIREMENTS, CHLORIDE ION PERMEABILITY AND ALTERNATE CEMENT TYPE TO MEET THE REQUIREMENTS FOR THE NOTED EXPOSURE CLASS.

READY-MIXED CONCRETE AND CONCRETE PROPORTIONS SHALL BE IN ACCORDANCE WITH CSA A23.1, CLAUSE 12 AND AS FOLLOWS:

1. PROVIDE CERTIFICATION THAT MIX PROPORTIONS SELECTED WILL PRODUCE CONCRETE OF SPECIFIED QUALITY AND YIELD AND THAT STRENGTH WILL COMPLY WITH CSA-A23.1.
2. USE OF CALCIUM CHLORIDE NOT PERMITTED.
3. DO NOT CHANGE CONCRETE MIX WITHOUT PRIOR APPROVAL OF CONSULTANT. SHOULD CHANGE IN MATERIAL SOURCE BE PROPOSED, NEW MIX DESIGN TO BE APPROVED BY CONSULTANT.
4. ALL CONCRETE EXPOSED TO EXTERIOR CONDITIONS TO BE AIR ENTRAINED AS PER CSA A23.1.

D03-5 CONCRETE COLD WEATHER PROTECTION

1. CONTRACTOR IS RESPONSIBLE TO PROVIDE TEMPORARY HEAT, INSULATION MATERIALS OR OTHER MEANS AS REQUIRE TO PROTECT THE MASONRY BLOCKS, GROUT, CONCRETE AND GRANULAR MATERIALS FROM FREEZING DURING THE WORK, IN ACCORDANCE WITH CSA-A23.1.
2. PROTECT SUB-GRADE FROM FREEZING AND FROST ACTION AT ALL TIMES DURING CONSTRUCTION. DO NOT PLACE CONCRETE ON FROZEN GROUND.
3. CONTRACTOR TO PROVIDE PROPOSED METHOD OF PROTECTION FOR OUR REVIEW PRIOR TO COMMENCING THE WORK.
4. CURE CONCRETE TO CSA A23.1/A23.2. TAKE APPROPRIATE PRECAUTIONS FOR COLD WEATHER WORK AS PER CSA A23.1/A23.2.

D03-6 CONCRETE WARM WEATHER PROTECTION

1. CARRY OUT HOT WEATHER CONCRETING IN ACCORDANCE WITH CSA A23.1.
2. PROTECT CONCRETE FROM EFFECT OF HOT OR DRYING WEATHER CONDITIONS. PROTECT FORMS AND REINFORCING FROM THE DIRECT RAYS OF THE SUN, OR COOL BY FOGGING AND EVAPORATION.
3. CURE CONCRETE TO CSA A23.1/A23.2. TAKE APPROPRIATE PRECAUTIONS FOR HOT WEATHER WORK AS PER CSA A23.1/A23.2.

D03-7 FIELD QUALITY CONTROL

1. INSPECTION AND TESTING OF CONCRETE AND CONCRETE MATERIALS WILL BE CARRIED OUT BY AS TESTING LABORATORY DESIGNATED BY THE CLIENT IN ACCORDANCE WITH CSA-A23.1 AND DIVISION 1.
2. AIR ENTRAINMENT TEST AND SLUMP TEST MADE FROM SAME BATCH OF CONCRETE FROM WHICH TEST CYLINDERS ARE MADE.
3. TESTS WILL BE MADE IN ACCORDANCE WITH CSA A23.2.
4. INSPECTION COMPANY'S REPORTS OF TESTS WILL BE FORWARDED TO THE CONSULTANT AND CONTRACTOR WITH AN OPINION OR REASON FOR ANY ABNORMALITIES NOTES THEREON.
5. COOPERATE WITH AND ASSIST INSPECTION COMPANY'S PERSONNEL DURING INSPECTION AND TESTS.
6. REMOVE DEFECTIVE MATERIALS AND COMPLETED WORK WHICH FAILS TESTS AND REPLACE AS DIRECTED BY THE CONSULTANT.
7. WHERE WORK OR MATERIALS FAIL TO MEET STRENGTH REQUIREMENTS AS INDICATED BY TEST RESULTS, PAY COSTS OF ADDITIONAL INSPECTION AND TESTING REQUIRED FOR NEW REPLACEMENT WORK OR MATERIALS.
8. NON-DESTRUCTIVE METHODS FOR TESTING CONCRETE SHALL BE IN ACCORDANCE WITH CSA-A23.2.
9. INSPECTION OR TESTING BY THE CONSULTANT WILL NOT AUGMENT OR REPLACE CONTRACTOR QUALITY CONTROL NOR RELIEVE HIM OF HIS CONTRACTUAL RESPONSIBILITY.

D03-8 SLAB ON GRADE REMOVALS/REINSTATEMENT

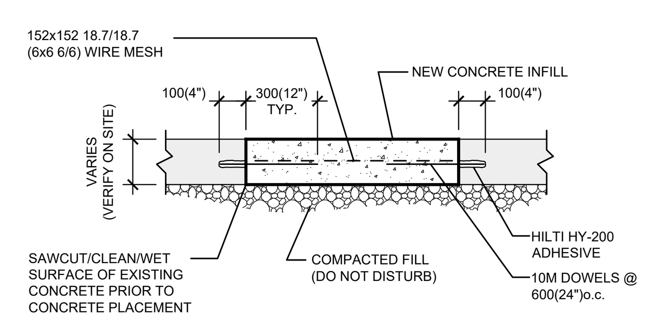

D04) STEEL

D04-1 STRUCTURAL STEEL:

STRUCTURAL STEEL SHALL COMPLY WITH CSA S16 UNLESS OTHERWISE NOTED.

ITEM	APPLICABLE SPECIFICATION (UNLESS OTHERWISE NOTED)
ROLLED SECTIONS	CSA G40.21 - 350W
HSS (TUBE) SECTIONS	CSA G40.21 - 350W (CLASS C)
CONNECTION BOLTS	ASTM A325 (BEARING TYPE)
ANCHOR BOLTS	ASTM F1554 GRADE 36 (U/N NOTED IN BASEPLATE SCHEDULE)
CHANNELS, ANGLES, PLATES	CSA G40.21-300W

1. ALL STEEL WORK SHALL BE GIVEN ONE COAT OF APPROVED PRIMER.
2. FIELD AND SHOP CONNECTIONS SHALL BE WELDED OR HIGH TENSILE BOLTED (ASTM STANDARD A325).
3. WELDING SHALL CONFORM TO LATEST CSA SPECIFICATION W59 AND BE UNDERTAKEN BY A FABRICATOR APPROVED BY THE CANADIAN WELDING BUREAU TO THE REQUIREMENTS OF CSA SPECIFICATION W47.1.
4. ALL EXPOSED WELDS SHALL BE CONTINUOUS AND BE GROUND SMOOTH.
5. ALL EXTERIOR EXPOSED STRUCTURAL STEEL SHALL BE GALVANIZED OR PAINTED WITH APPROVED RUST INHIBITIVE PAINT.
6. STRUCTURAL STEEL MEMBERS SHALL NOT BE SPLICED UNLESS APPROVED BY THE STRUCTURAL ENGINEER IN WRITING.
7. WHERE STRUCTURAL STEEL MEMBERS SPECIFIED ON THE STRUCTURAL DRAWINGS ARE UNAVAILABLE TO THE CONTRACTOR, THE STRUCTURAL STEEL CONTRACTOR SHALL PROVIDE MEMBERS HAVING ALL SECTION PROPERTIES EQUAL TO OR BETTER THAN THAT OF THE SPECIFIED MEMBERS AT NO ADDITIONAL COST. CONTACT ENGINEER FOR ACCEPTANCE OF ANY AND ALL SUBSTITUTIONS.
8. DESIGN DETAILS AND CONNECTIONS IN ACCORDANCE WITH REQUIREMENTS OF CSA S16 TO RESIST FORCES, MOMENTS, SHEARS AND ALLOW FOR MOVEMENTS INDICATED.

   SHEAR CONNECTIONS:
   a. SELECT FRAMED BEAM SHEAR CONNECTIONS FROM AN INDUSTRY ACCEPTED PUBLICATION SUCH AS "HANDBOOK OF THE CANADIAN INSTITUTE OF STEEL CONSTRUCTION" WHEN CONNECTION FOR SHEAR ONLY (STANDARD CONNECTION) IS REQUIRED.
   b. SELECT OR DESIGN CONNECTIONS TO SUPPORT REACTION FROM MAXIMUM UNIFORMLY DISTRIBUTED LOAD THAT CAN BE SAFELY SUPPORTED BY BEAM IN BENDING, PROVIDED NO POINT LOADS ACT ON BEAM, WHEN SHEARS ARE NOT INDICATED.
9. DESIGN FORCES FOR CONNECTIONS SHOWN ON DRAWINGS HAVE BEEN AMPLIFIED BY FACTOR LISTED IN CLAUSE 27.11 OF CSA S16.14.

D04-2 STEEL DECK:

1. ALL METAL DECK SHALL BE A MINIMUM OF 38mm(1½") DEEP, WITH DECK FLUTES AT 150mm(6") CENTRES, CONTINUOUS OVER AT LEAST THREE SPANS, AND SHALL BE FORMED FROM SHEET STEEL CONFORMING TO CSSBI 10M/12M/20M, MINIMUM GRADE `A', WITH A BASE STEEL NOMINAL THICKNESS SPECIFIED ON PLANS, AND A MINIMUM ZINC COATING DESIGNATION OF "WIPED COAT".
   MINIMUM SIZES AS FOLLOWS (U/N ON PLANS):
   ROOFS: 38x0.91 (1½"x20 ga)
2. DECK CONNECTIONS TO SUPPORTING STRUCTURE TO BE AS FOLLOWS (U/N ON PLANS):
   HILTI X-EDN-19 POWDER ACTUATED NAILS AT 300 (12" c/c) ALONG DECK PERIMETER AND INTERMEDIATE SUPPORTS #10 SCREWS @ 12" c/c AT SIDELAPS
3. ALL WELDS SHALL BE PRIME PAINTED BY DECK CONTRACTOR.
4. STEEL DECK CONTRACTOR TO REINFORCE ALL OPENINGS AS NOTED BELOW:

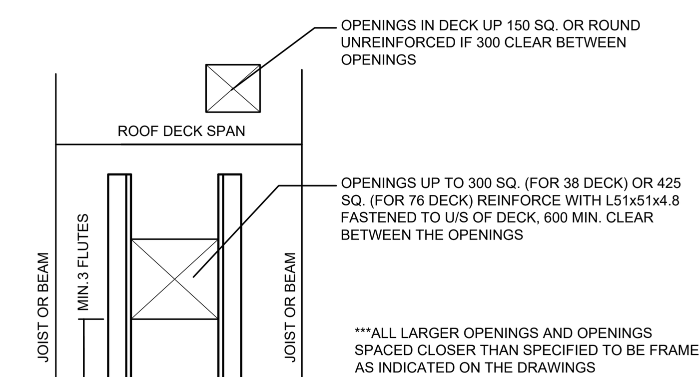

5. ALL DECK CLOSURES SHALL BE SUPPLIED AND INSTALLED BY THE DECK CONTRACTOR. (PROVIDE DECK CLOSURES AT ALL AREAS WHERE DECK EDGES ARE WEAK).
6. WEDGE THE FLUTES OF THE STEEL ROOF DECK UNDER WOOD SLEEPERS CARRYING ROOF TOP UNITS (THIS SHALL ALSO APPLY TO ROOF TOP UNITS WITH METAL CURBS).
7. NO MECHANICAL OR ELECTRICAL EQUIPMENT/ACCESSORIES SHALL BE HUNG FROM THE STEEL DECK.
8. HANGERS FOR SUSPENSION OF CEILING ARE TO BE ATTACHED TO THE STEEL JOISTS. THESE MAY HOWEVER BE ATTACHED IN BETWEEN STEEL JOISTS TO THE SIDE OF THE DECK FLUTES AND BY LOOPING AND TYING AROUND, BUT ON NO ACCOUNT SHOULD THESE HANGERS BE PUNCHED THROUGH THE BOTTOM FLUTES.
9. DETAIL AT DECK DIRECTION CHANGE

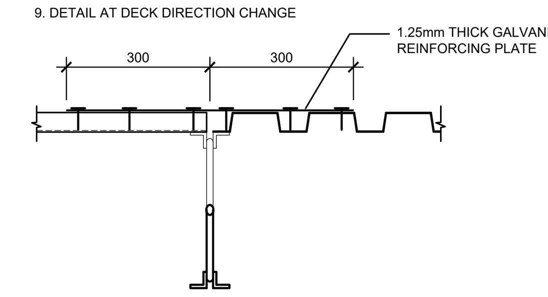

DETAIL AT DECK DIRECTION CHANGE

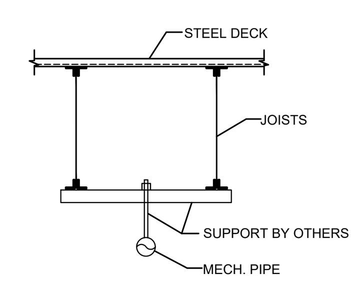

EQUIPMENT SUPPORTS

D04-3 STEEL JOISTS AND BRIDGING: S16.1 AND S136:

1. ALL JOISTS ARE TO BE EQUALLY SPACED BETWEEN TIE JOISTS/BEAMS.
2. ALL JOISTS ARE TO BE CAMBERED FOR FULL DEAD LOAD DEFLECTION. LIMIT LIVE LOAD DEFLECTIONS TO NOT MORE THAN L/360 FOR ROOF AREAS AND NOT MORE THAN L/480 FOR FLOOR AREAS. TOTAL LOAD DEFLECTION FOR FLOOR JOISTS NOT TO EXCEED L/240. FLOOR JOISTS TO ALSO MEET VIBRATION CRITERIA OUTLINED IN 2006 OBC CLAUSE 4.1.3.6.
3. IN ORDER TO FACILITATE THE PASSAGE OF MECHANICAL DUCTS AND PIPES THROUGH THE ROOF JOISTS, THE JOIST SUPPLIER SHALL LOCATE THE DIAGONALS SO THAT THEY LINE UP FROM JOIST TO JOIST.
4. SPECIFIED POINT LOADS ARE SHOWN ON PLANS.
5. ALL PIPES MUST BE HUNG FROM TOP CHORD OF JOISTS. IF A LOAD (APPROVED BY THE STRUCTURAL ENGINEER) IS HUNG FROM A JOIST AT A LOCATION OTHER THAN THE PANEL POINT, THEN A WEB DIAGONAL SHALL BE WELDED FROM THE HANGER LOCATION TO THE NEAREST PANEL POINT ON THE OPPOSITE CHORD.
6. LOADING DIAGRAMS:

   AREAS SHADED ON ROOF PLAN INDICATE EXTENT OF ADDITIONAL SNOW PILING WITH PEAK (SPECIFIED) LOADS NOTED. ROOF DECK AND JOISTS SHALL BE DESIGNED, MANUFACTURED AND ERECTED TO SUPPORT BASIC SPECIFIED AS WELL AS ADDITIONAL SNOW LOADING.
7. a) PROVIDE 1 ROW OF HORIZONTAL BRIDGING AT FIRST BOTTOM CHORD PANEL POINT AT EACH END OF JOIST. PROVIDE ADDITIONAL CROSS BRIDGING AS INDICATED ON PLAN.

   b) STEEL CONTRACTOR SHALL DESIGN, SUPPLY AND ERECT REMAINDER OF HORIZONTAL JOIST BRIDGING OF SUFFICIENT SIZE AND SPACING IN ACCORDANCE WITH CSA S16.1 LATEST EDITION.
8. DESIGN JOISTS FOR ALL LOADING CONDITIONS SPECIFIED IN THE NATIONAL BUILDING CODE IN ADDITION TO THE SNOW LOADS SPECIFIED ON PLANS.
9. PROVIDE ADDITIONAL X-BRIDGING BETWEEN THE OUTSIDE PERIMETER BEAMS AND THE FIRST ROW OF JOIST RUNNING PARALLEL. ADDITIONAL BRIDGING IS SHOWN AS ═══ ON PLAN. MINIMUM SIZE TO BE L 38x38x4 (L 1½"x1½"x⅛") SPACED @ 1800(6'-8") c/c (MAX.) UNLESS OTHERWISE NOTED.

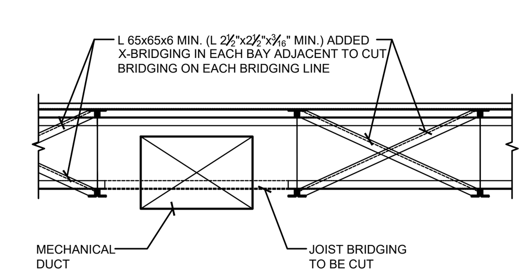

TYPICAL DETAIL WHERE BOTTOM CHORD JOIST BRIDGING AND/OR BRACING IS REQUIRED TO BE CUT DUE TO INTERFERENCE BY MECHANICAL DUCTWORK

COLUMN SCHEDULE

MARK	SIZE	NOTES
C1	HSS 6"x6"x¼"	CLASS `C'

BASEPLATE SCHEDULE

MARK	SIZE	NOTES
B℞1	12"x12"x¾"	PROVIDE ¾"Ø x 16" LONG HEAVY HEX NUT ANCHOR BOLTS (F1554 GRADE 36) U/N

NOTES:
1. LENGTH OF ANCHORS IS EMBEDMENT LENGTH, MEASURED FROM CONCRETE SURFACE TO EDGE OF EMBEDDED BOLT HEAD. FABRICATOR TO PROVIDE ADDITIONAL LENGTH AS REQUIRED FOR THREADS/NUTS/ TOLERANCES, ETC.
2. ALL ANCHORS TO BE CAST-IN PLACE.
3. PROVIDE MIN. 25(1") THICK GROUT BED BELOW BASE PLATE

FOOTING SCHEDULE

MARK	SIZE	REINFORCING
F1	52"x52"x10"	SEE DETAILS
F2	VARIES - REFER TO DETAILS	SEE DETAILS
F3	VARIES - REFER TO DETAILS	SEE DETAILS

NOTES:
1. PROVIDE MINIMUM 6'-0" FROST COVER TO BOTTOM OF ALL FOOTINGS EXPOSED TO EXTERIOR CONDITIONS OR AS PER GEOTECH REPORT

FOUNDATION WALL SCHEDULE

MARK	SIZE	REINFORCING
FW1	VARIES - REFER TO DETAILS	SEE DETAILS
FW2	VARIES - REFER TO DETAILS	SEE DETAILS

D04-4 TYPICAL JOIST/BEAM/EDGE DETAILS (CONT'D)

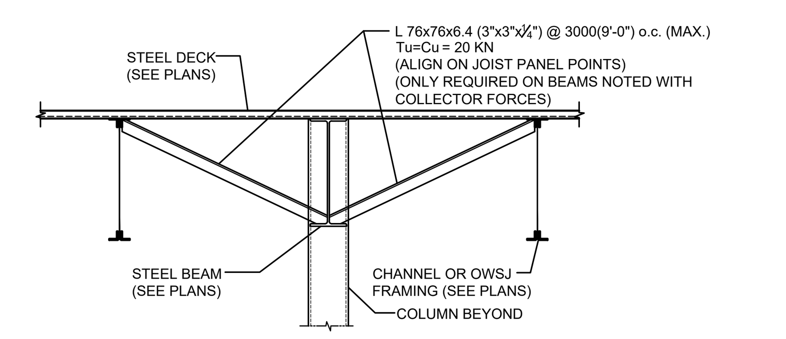

DETAIL: ROOF: COLLECTOR BEAM STABILIZERS

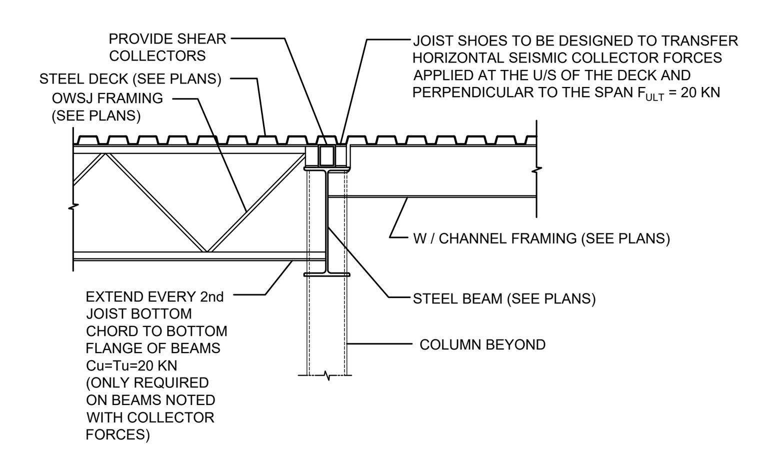

DETAIL: ROOF: BEAM / JOIST SUPPORTS

arbaum ARCHITECTS
535 LEGGET DRIVE, SUITE 102
KANATA, ONTARIO K2K 3B8

BPA
21-2301

KEY PLAN: LEVEL 1

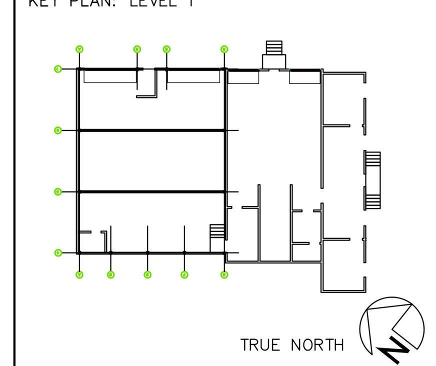

CONTRACTOR SHALL CHECK AND VERIFY ALL DIMENSIONS AND REPORT ANY OMISSIONS OR DISCREPANCIES TO THE ARCHITECT BEFORE PROCEEDING WITH THE WORK.

DO NOT SCALE DRAWINGS.

REVISIONS

NO.	DESCRIPTION	DATE
1	ISSUED FOR COORDINATION	SEPT 16/21
2	ISSUED FOR COORDINATION	DEC 17/21
3	ISSUED FOR PERMIT	JAN 21/22
4	ISSUED FOR REVIEW	JAN 04/24
5	RE-ISSUED FOR PERMIT	MAY 06/24
6	ISSUED FOR SITE PLAN CONTROL	JUNE 18/24
7	RE-ISSUED FOR SITE PLAN CONTROL	OCT 25/24
8	RESPONSE TO CITY COMMENTS SPC_R03	FEB 11/25

LICENSED PROFESSIONAL ENGINEER
K. M. ELLWOOD
100517366
FEB 11/25
PROVINCE OF ONTARIO

NOT BE USED FOR CONSTRUCTION PURPOSES UNTIL SIGNED BY THE ENGINEER.

DATE 2022-01-06
DRAWN W. ARSENAULT
CHECKED A.R/K.E.
DATE PRINTED

PROJECT NORTH

APPROVED
By Adam Brown at 9:42 am, May 25, 2025

ADAM BROWN
MANAGER, DEVELOPMENT REVIEW - RURAL
PLANNING, REAL ESTATE & ECONOMIC DEVELOPMENT DEPARTMENT, CITY OF OTTAWA

CARDEVCO WAREHOUSE

ADDRESS: 129 John Cavanaugh Dr, Carp, ON K0A 1L0

DRAWING TITLE
GENERAL NOTES & DETAILS

SCALE AS SHOWN
PROJECT NO:
DRAWING NO. : S000