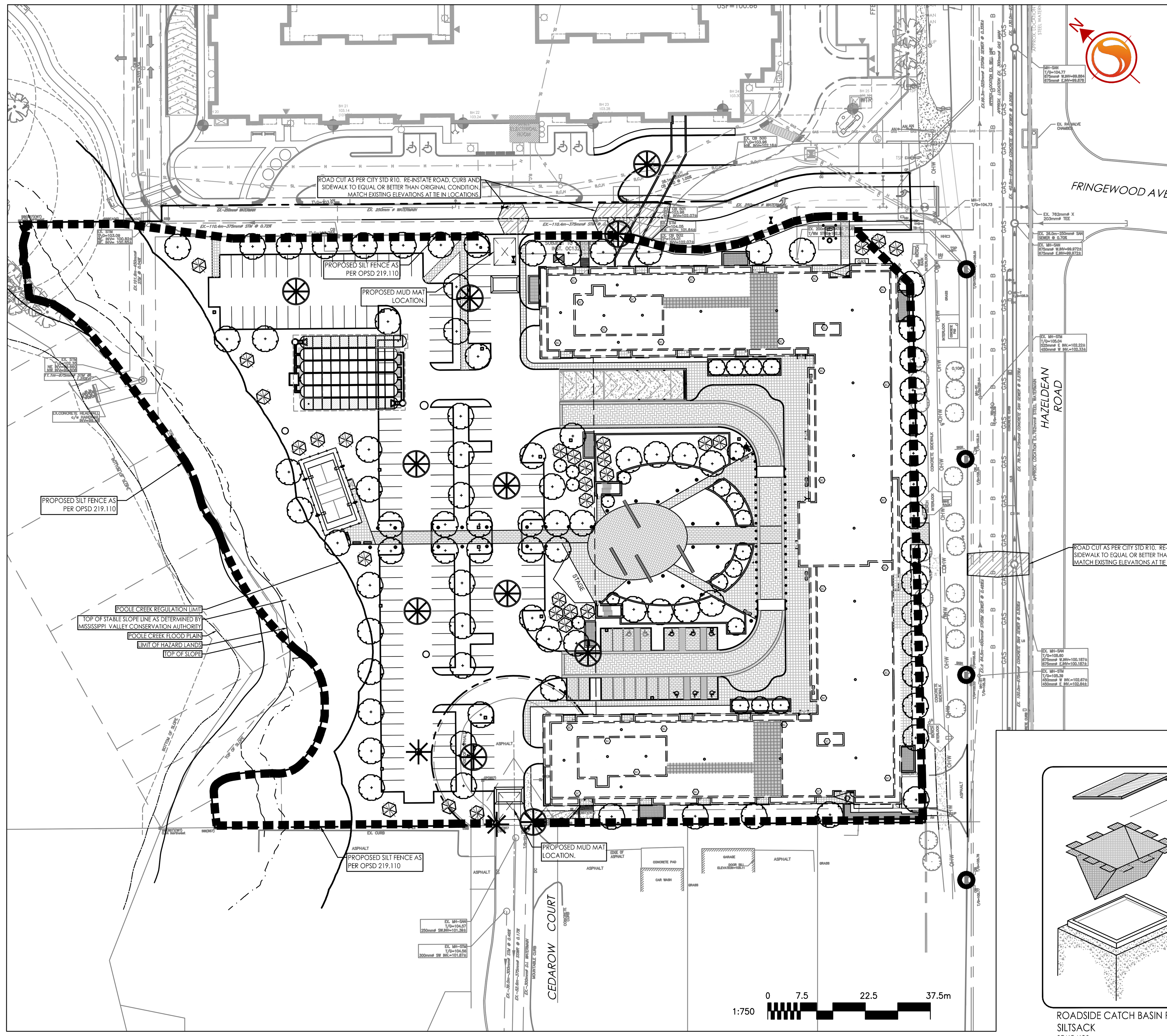

FLEXSTORM P/Ns 62MHDRFX & 62MHDRFXP

RD INLET TYPE: RAISED CAST IRON FRAME AND ROUND GRATE

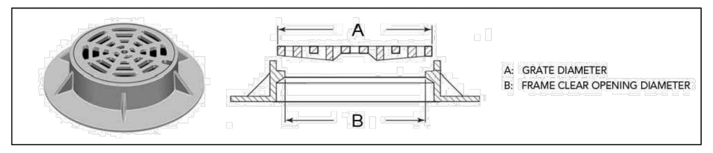

Pure Frame with FX Bag		Field Inlet Dimensions		Flexstorm Framing Dims		Flexstorm Ratings (50%)			Pure Frame with FX+ Bag	
ADS P/N	Flexstorm Item Code	A	B	B1	A1	Bag Capacity (ft³)	PC/PC+ Flow Rate (CFS)	Bypass (CFS)	ADS P/N	Flexstorm Item Code
62MHDRFX	P-RD-240-218-FX	24	21.75	21.3	23.3	0.8	1.4	2.5	62MHDRFXP	P-RD-240-218-FXP
62MHDRFX	P-RD-233-220-FX	23.25	22	21.3	23.3	0.7	1.3	2.5	62MHDRFXP	P-RD-233-220-FXP
62MHDRFX	P-RD-238-220-FX	23.75	22	21.3	23.3	0.8	1.4	2.5	62MHDRFXP	P-RD-238-220-FXP
62MHDRFX	P-RD-239-220-FX	23.87	22	21.3	23.3	0.8	1.4	2.5	62MHDRFXP	P-RD-239-220-FXP
62MHDRFX	P-RD-260-220-FX	26	22	21.3	23.3	0.8	1.4	2.5	62MHDRFXP	P-RD-260-220-FXP
62MHDRFX	P-RD-238-221-FX	23.75	22.125	21.3	23.3	0.8	1.4	2.5	62MHDRFXP	P-RD-238-221-FXP
62MHDRFX	P-RD-228-223-FX	22.75	22.25	20.5	22.5	0.7	1.3	2.4	62MHDRFXP	P-RD-228-223-FXP
62MHDRFX	P-RD-238-223-FX	23.75	22.25	21.3	23.3	0.8	1.4	2.5	62MHDRFXP	P-RD-238-223-FXP
62MHDRFX	P-RD-240-223-FX	24	22.25	21.3	23.3	0.8	1.4	2.5	62MHDRFXP	P-RD-240-223-FXP
62MHDRFX	P-RD-238-224-FX	23.75	22.375	21.3	23.3	0.8	1.4	2.5	62MHDRFXP	P-RD-238-224-FXP
62MHDRFX	P-RD-239-224-FX	23.87	22.375	21.3	23.3	0.8	1.4	2.5	62MHDRFXP	P-RD-239-224-FXP
62MHDRFX	P-RD-238-225-FX	23.75	22.5	21.3	23.3	0.8	1.4	2.5	62MHDRFXP	P-RD-238-225-FXP
62MHDRFX	P-RD-240-225-FX	24	22.5	21.3	23.3	0.8	1.4	2.5	62MHDRFXP	P-RD-240-225-FXP
62MHDRFX	P-RD-248-226-FX	24.75	22.62	22.5	24.5	0.9	1.4	2.6	62MHDRFXP	P-RD-248-226-FXP
62MHDRFX	P-RD-239-228-FX	23.87	22.75	21.3	23.3	0.8	1.4	2.5	62MHDRFXP	P-RD-239-228-FXP
62MHDRFX	P-RD-238-230-FX	23.75	23	21.3	23.3	0.8	1.4	2.5	62MHDRFXP	P-RD-238-230-FXP
62MHDRFX	P-RD-240-230-FX	24	23	21.3	23.3	0.8	1.4	2.5	62MHDRFXP	P-RD-240-230-FXP
62MHDRFX	P-RD-250-230-FX	25	23	22.5	24.5	0.9	1.4	2.6	62MHDRFXP	P-RD-250-230-FXP
62MHDRFX	P-RD-254-230-FX	25.375	23	22.5	24.5	0.9	1.4	2.6	62MHDRFXP	P-RD-254-230-FXP
62MHDRFX	P-RD-256-230-FX	25.62	23	22.5	24.5	0.9	1.4	2.6	62MHDRFXP	P-RD-256-230-FXP
62MHDRFX	P-RD-258-230-FX	25.75	23	22.5	24.5	0.9	1.4	2.6	62MHDRFXP	P-RD-258-230-FXP
62MHDRFX	P-RD-248-234-FX	24.75	23.375	22.5	24.5	0.9	1.4	2.6	62MHDRFXP	P-RD-248-234-FXP
62MHDRFX	P-RD-260-235-FX	26	23.5	23.5	25.5	0.9	1.5	2.7	62MHDRFXP	P-RD-260-235-FXP
62MHDRFX	P-RD-258-236-FX	25.75	23.62	23.5	25.5	0.9	1.5	2.7	62MHDRFXP	P-RD-258-236-FXP
62MHDRFX	P-RD-258-238-FX	25.75	23.812	23.5	25.5	0.9	1.5	2.7	62MHDRFXP	P-RD-258-238-FXP
62MHDRFX	P-RD-253-240-FX	25.25	24	22.5	24.5	0.9	1.5	2.6	62MHDRFXP	P-RD-253-240-FXP
62MHDRFX	P-RD-258-240-FX	25.75	24	23.5	25.5	0.9	1.5	2.7	62MHDRFXP	P-RD-258-240-FXP
62MHDRFX	P-RD-260-240-FX	26	24	23.5	25.5	1.0	1.5	2.7	62MHDRFXP	P-RD-260-240-FXP
62MHDRFX	P-RD-268-240-FX	26.75	24	23.5	25.5	1.0	1.5	2.7	62MHDRFXP	P-RD-268-240-FXP
62MHDRFX	P-RD-260-241-FX	26	24.1	23.5	25.5	1.0	1.5	2.7	62MHDRFXP	P-RD-260-241-FXP
62MHDRFX	P-RD-263-241-FX	26.25	24.1	23.5	25.5	1.0	1.5	2.7	62MHDRFXP	P-RD-263-241-FXP
62MHDRFX	P-RD-258-241-FX	25.75	24.125	23.5	25.5	0.9	1.5	2.7	62MHDRFXP	P-RD-258-241-FXP
62MHDRFX	P-RD-258-243-FX	25.75	24.25	23.5	25.5	0.9	1.5	2.7	62MHDRFXP	P-RD-258-243-FXP

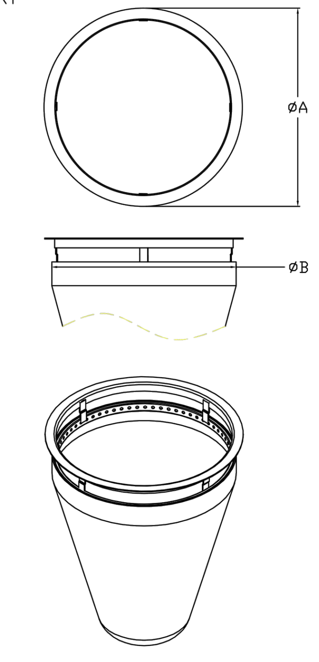

NOTES:

1. RATINGS SHOWN ARE FOR STANDARD 22" BAG DEPTH; "SHORT" 12" DEPTH BAGS ARE AVAILABLE WITH -S SUFFIX; RATINGS REDUCED BY ~50%.
2. THE FOLLOWING REQUIRES ADDITIONAL REVIEW
-GRATES WITH EXTENDED BOTTOMS
-ANY OBSTRUCTED INLET OPENINGS

FLEXSTORM INLET FILTERS PURE

ALL PRODUCTS MANUFACTURED BY INLET & PIPE PROTECTION, INC
A DIVISION OF ADS, INC.
WWW.INLETFILTERS.COM
(866) 287-8655 PH
(630) 355-3477 FX
INFO@INLETFILTERS.COM

SIZE C | FRAME TYPE HDR | DWG NO RD-62MHDR-FX | REV A | SHEET 2 OF 2

FLEXSTORM P/Ns 62LHDRFX & 62LHDRFXP

RD INLET TYPE: RAISED CAST IRON FRAME AND ROUND GRATE

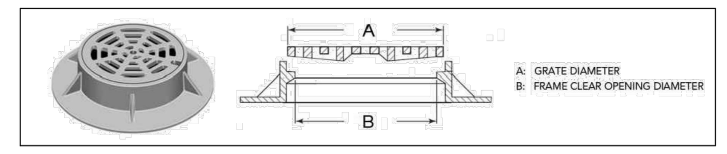

Pure Frame with FX Bag		Field Inlet Dimensions		Flexstorm Framing Dims		Flexstorm Ratings (Flow at 50% max)			Pure Frame with FX+ Bag	
ADS P/N	Flexstorm Item Code	A	B	B1	A1	Bag Capacity (ft³)	PC/PC+ Flow Rate (CFS)	Bypass (CFS)	ADS P/N	Flexstorm Item Code
62LHDRFX	P-RD-275-252-FX	27.5	25 1/6	25.0	27.0	2.1	1.6	5.8	62LHDRFXP	P-RD-275-252-FXP
62LHDRFX	P-RD-275-258-FX	27.5	25.75	25.0	27.0	2.2	1.6	5.8	62LHDRFXP	P-RD-275-258-FXP
62LHDRFX	P-RD-279-260-FX	27.875	26	25.0	27.0	2.2	1.6	5.8	62LHDRFXP	P-RD-279-260-FXP
62LHDRFX	P-RD-290-270-FX	29	27	26.5	28.5	2.4	1.7	6.1	62LHDRFXP	P-RD-290-270-FXP
62LHDRFX	P-RD-288-271-FX	28.75	27.125	26.5	28.5	2.4	1.7	6.1	62LHDRFXP	P-RD-288-271-FXP
62LHDRFX	P-RD-318-300-FX	31.75	30	29.5	31.5	3.0	1.9	6.8	62LHDRFXP	P-RD-318-300-FXP
62LHDRFX	P-RD-319-300-FX	31.87	30	29.5	31.5	3.0	1.9	6.8	62LHDRFXP	P-RD-319-300-FXP
62LHDRFX	P-RD-320-300-FX	32	30	29.5	31.5	3.0	1.9	6.8	62LHDRFXP	P-RD-320-300-FXP
62LHDRFX	P-RD-323-303-FX	32.25	30.25	29.5	31.5	3.1	1.9	6.8	62LHDRFXP	P-RD-323-303-FXP
62LHDRFX	P-RD-341-315-FX	34.125	31.5	31.3	33.3	3.3	2.0	7.2	62LHDRFXP	P-RD-341-315-FXP
62LHDRFX	P-RD-341-323-FX	34.125	32.25	32.0	34.0	3.5	2.0	7.4	62LHDRFXP	P-RD-341-323-FXP
62LHDRFX	P-RD-343-323-FX	34.25	32.25	32.0	34.0	3.5	2.0	7.4	62LHDRFXP	P-RD-343-323-FXP
62LHDRFX	P-RD-341-325-FX	34.125	32.5	32.0	34.0	3.5	2.0	7.4	62LHDRFXP	P-RD-341-325-FXP
62LHDRFX	P-RD-360-340-FX	36	34	33.5	35.5	3.9	2.1	7.8	62LHDRFXP	P-RD-360-340-FXP
62LHDRFX	P-RD-380-360-FX	38	36	35.5	37.5	4.4	2.3	8.2	62LHDRFXP	P-RD-380-360-FXP

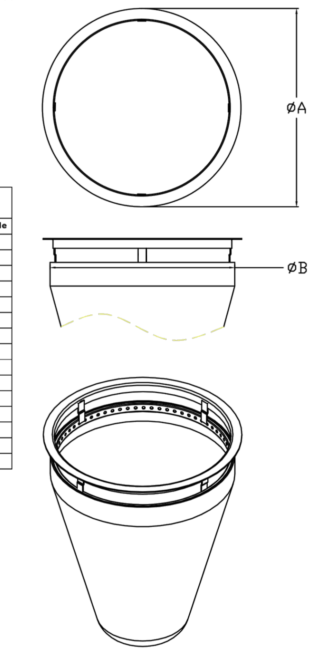

NOTES:

1. RATINGS SHOWN ARE FOR STANDARD 22" BAG DEPTH; "SHORT" 12" DEPTH BAGS ARE AVAILABLE WITH -S SUFFIX; RATINGS REDUCED BY ~50%.
2. THE FOLLOWING REQUIRES ADDITIONAL REVIEW
-GRATES WITH EXTENDED BOTTOMS
-ANY OBSTRUCTED INLET OPENINGS

FLEXSTORM INLET FILTERS PURE

ALL PRODUCTS MANUFACTURED BY INLET & PIPE PROTECTION, INC
A DIVISION OF ADS, INC.
WWW.INLETFILTERS.COM
(866) 287-8655 PH
(630) 355-3477 FX
INFO@INLETFILTERS.COM

SIZE C | FRAME TYPE HDR | DWG NO RD-62LHDR-FX | REV A | SHEET 1 OF 1

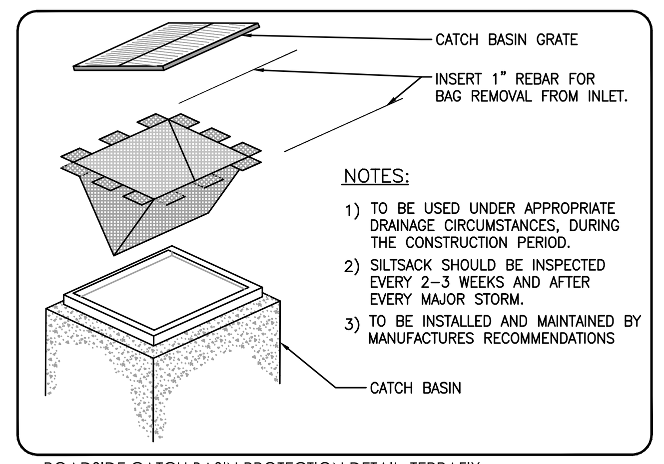

ROADSIDE CATCH BASIN PROTECTION DETAIL: TERRAFIX SILTSACK
SCALE: N.T.S.

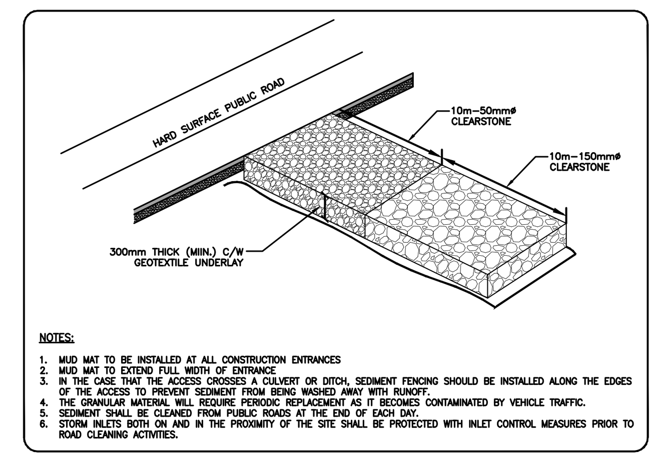

MUD MAT ENTRANCE DETAIL
SCALE: N.T.S.

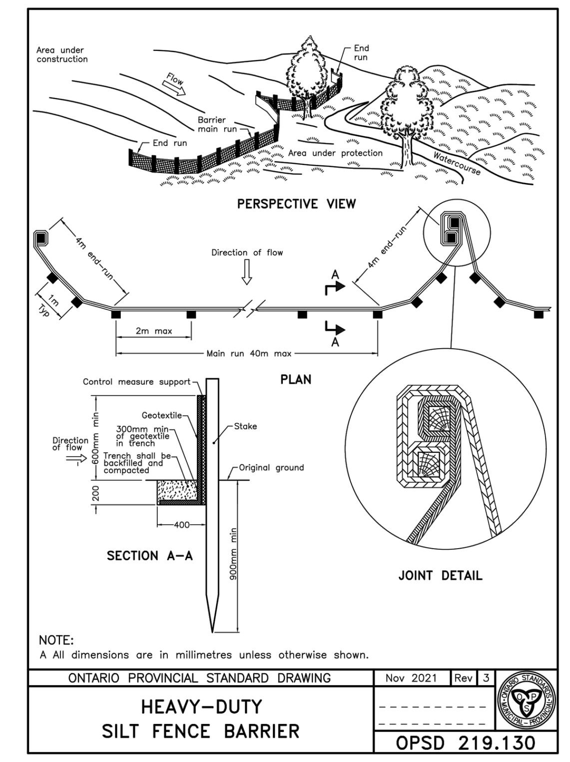

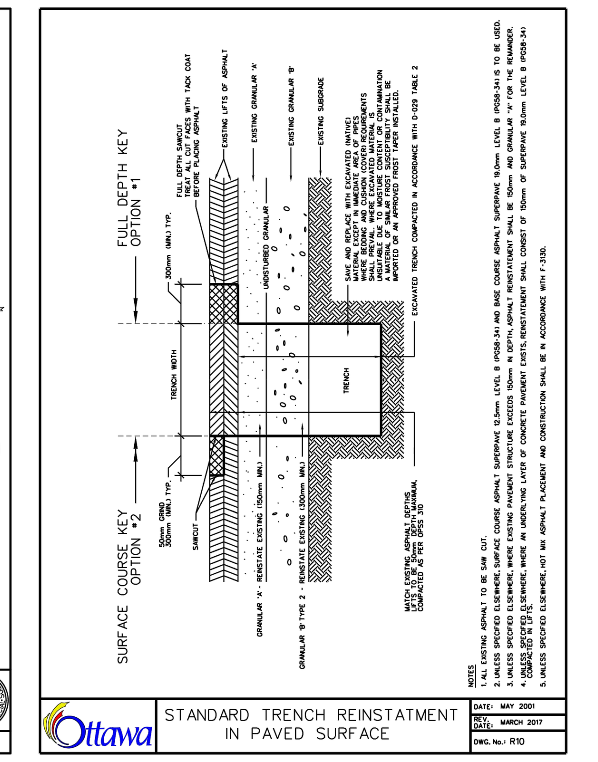

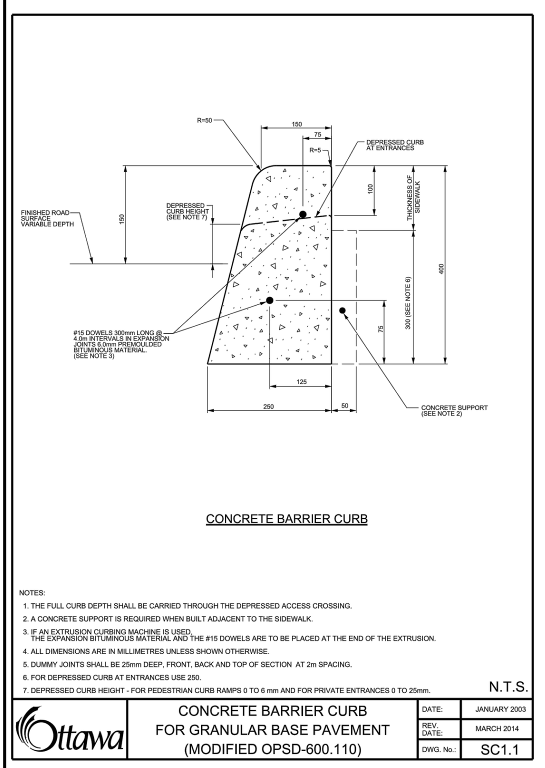

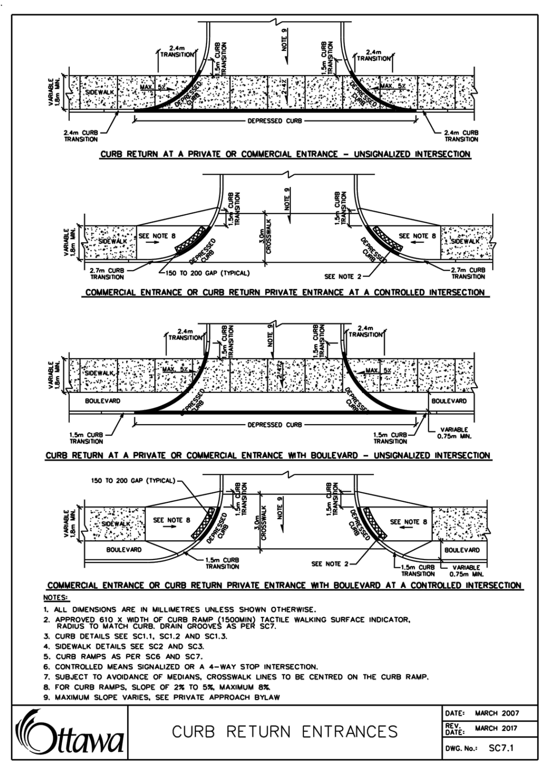

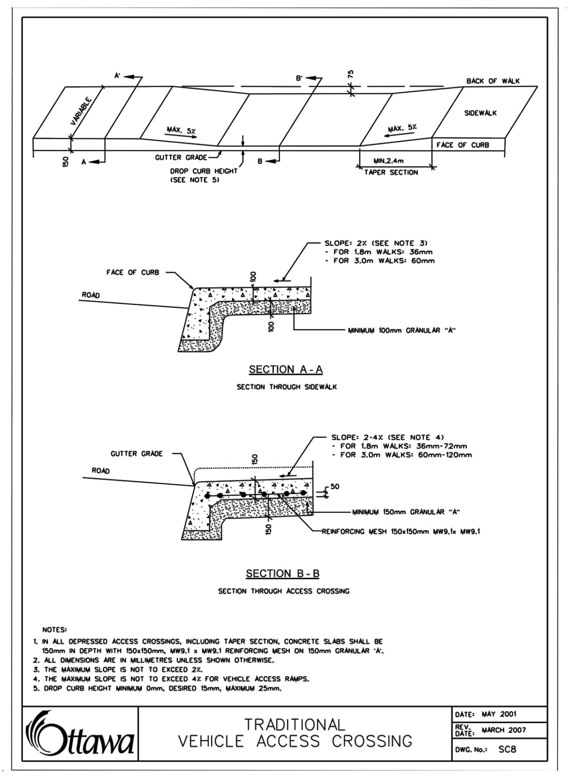

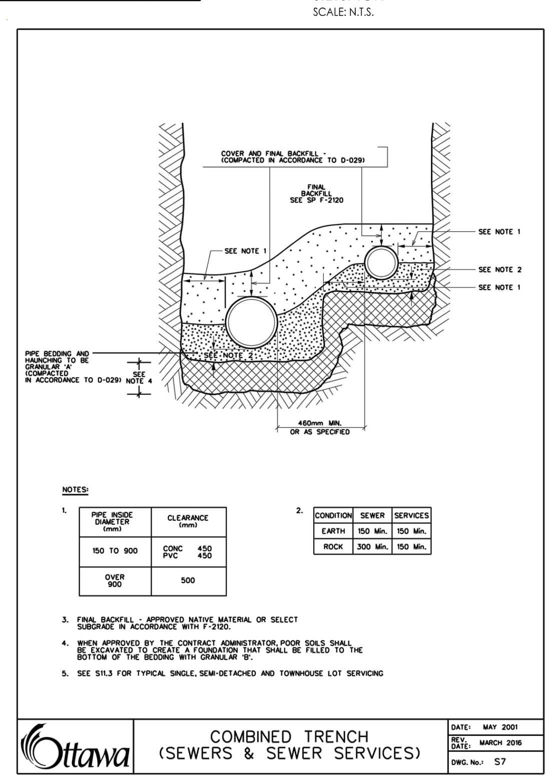

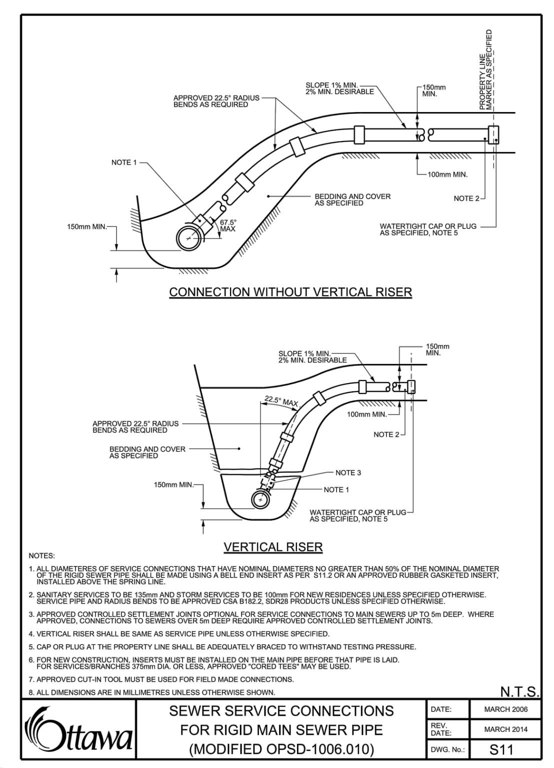

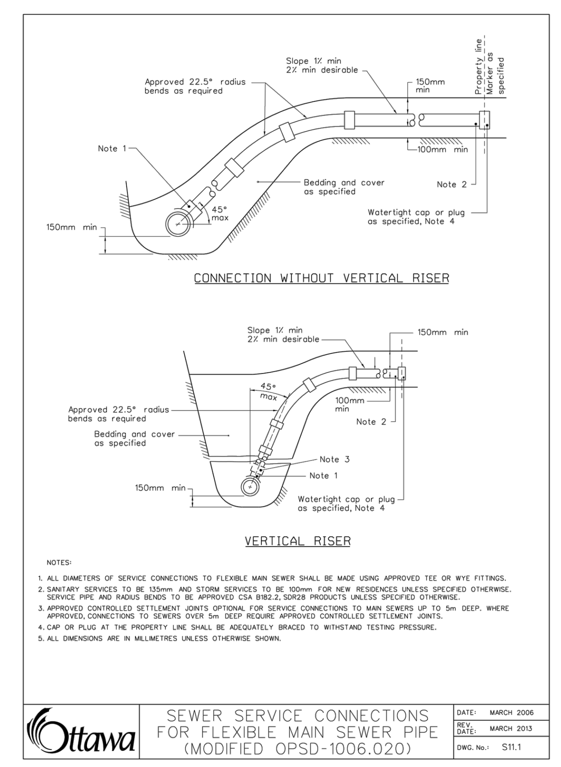

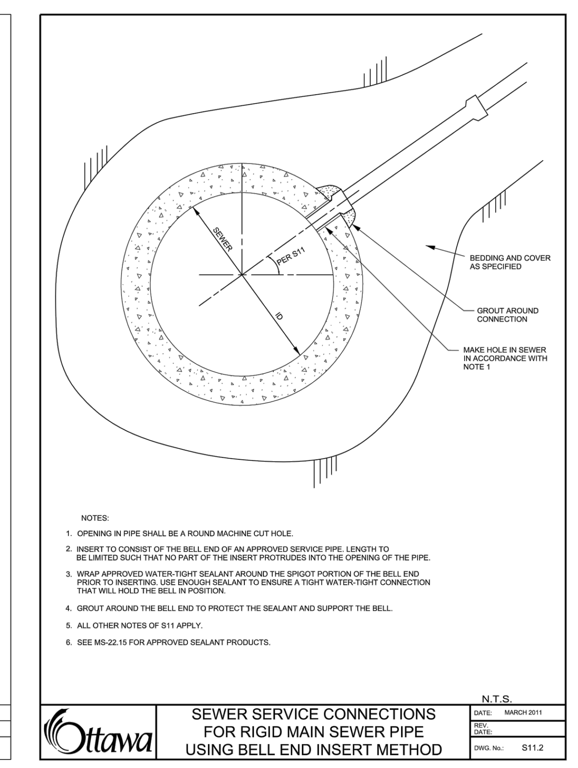

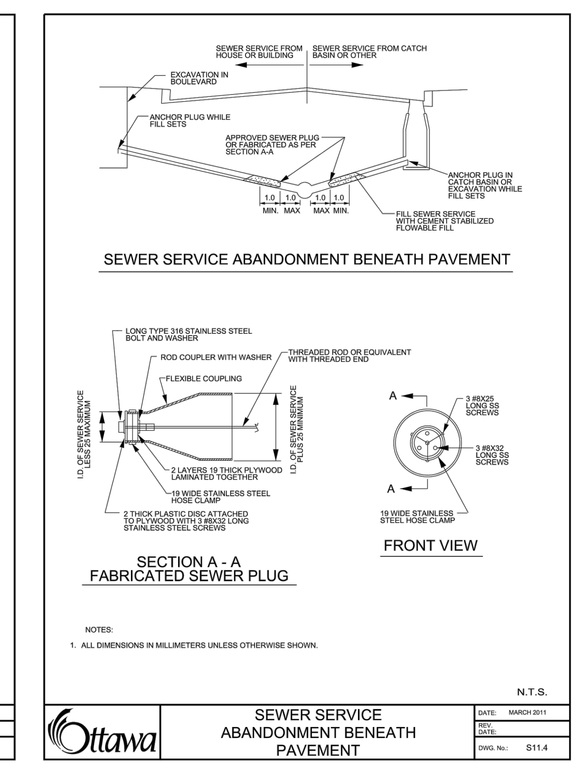

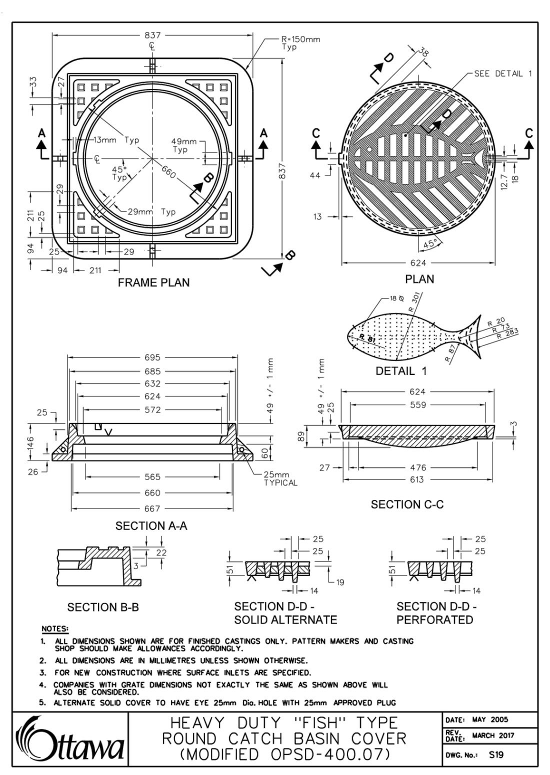

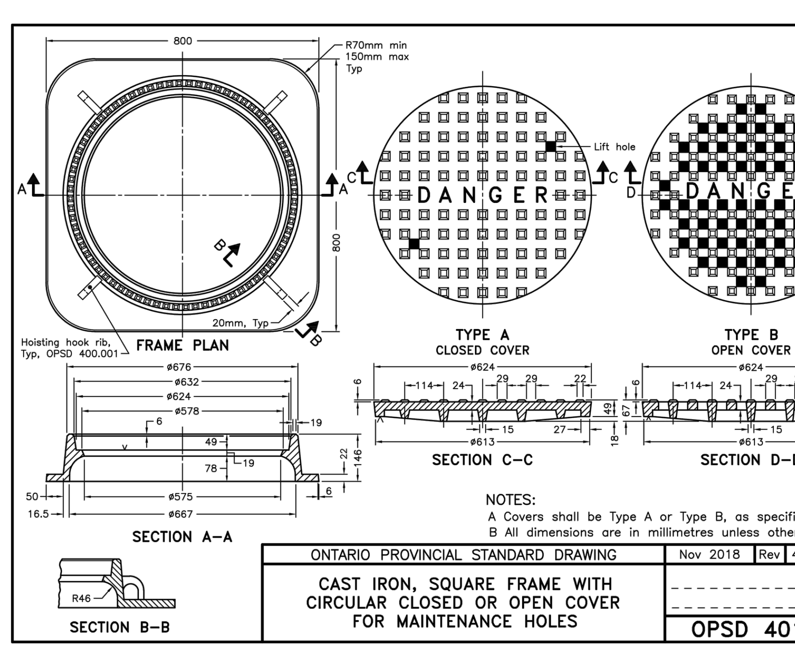

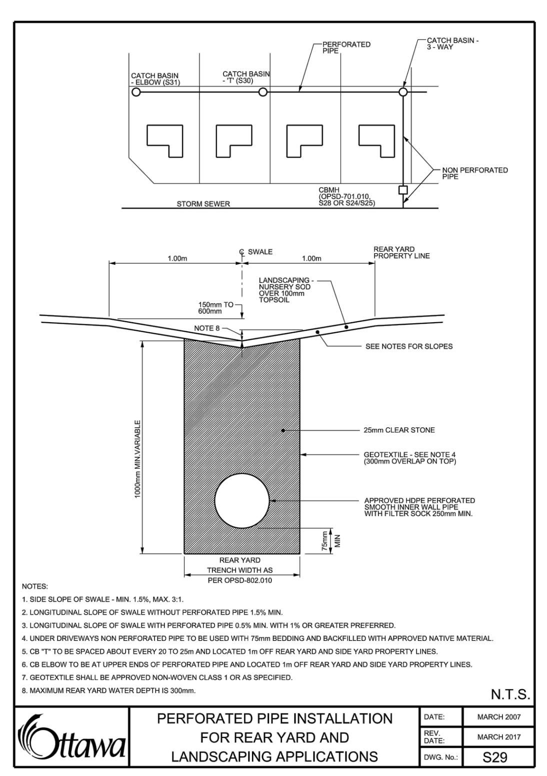

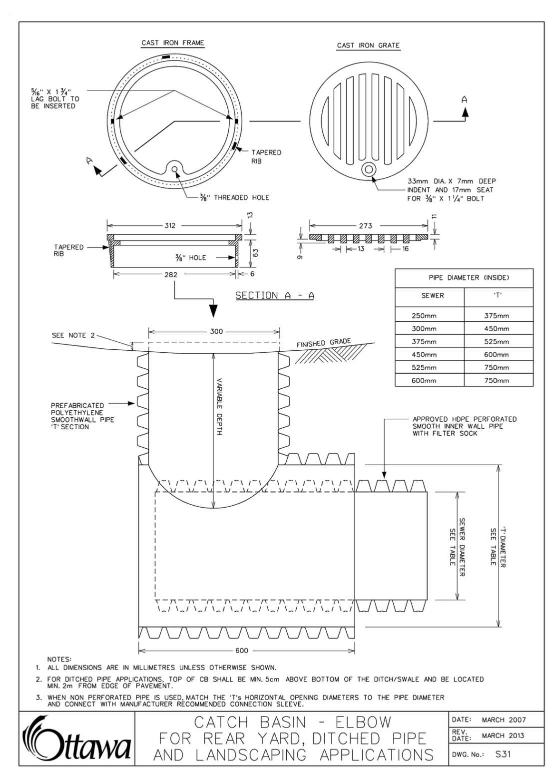

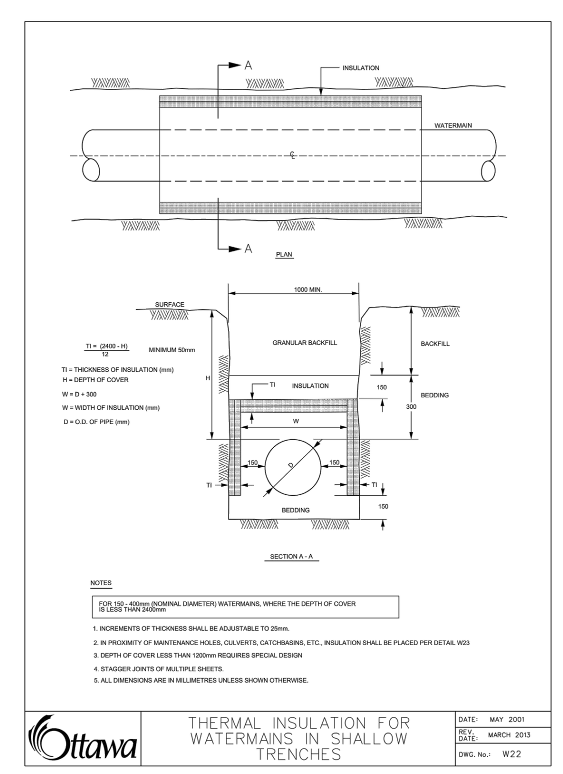

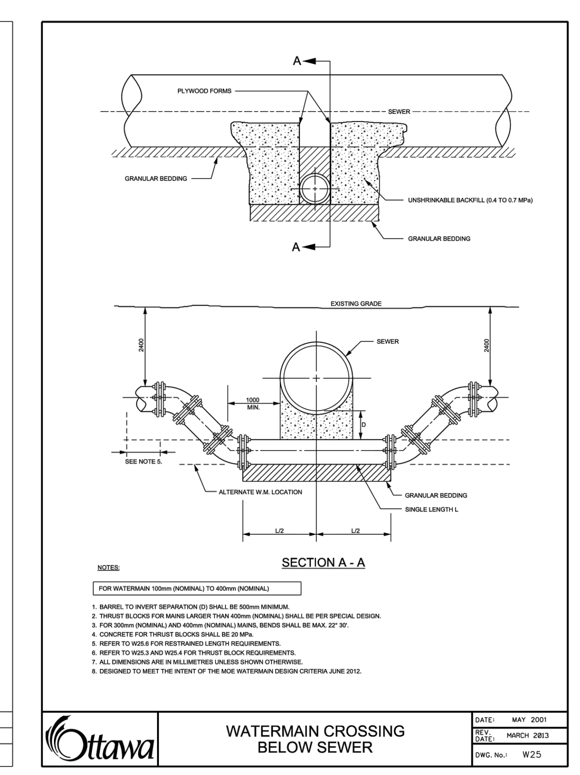

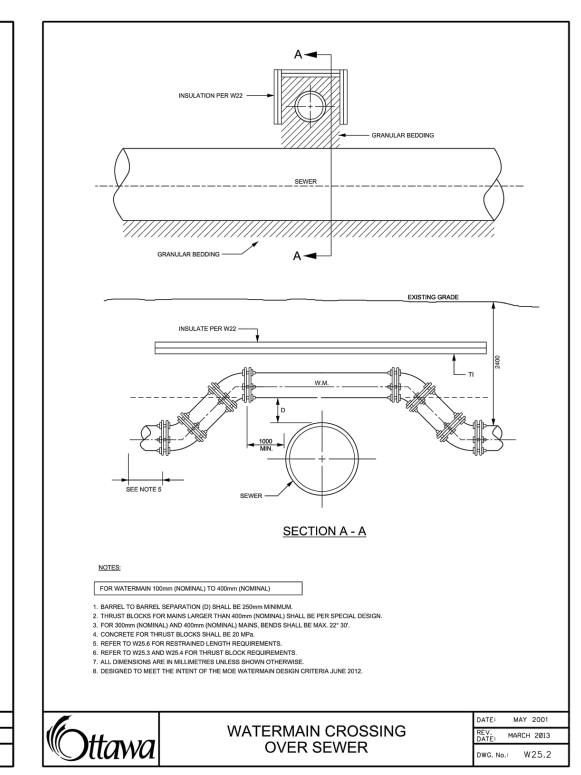

Stantec

Stantec Consulting Ltd.
400 - 1331 Clyde Avenue
Ottawa ON
Tel. 613.722.4420
www.stantec.com

Copyright Reserved

The Contractor shall verify and be responsible for all dimensions. DO NOT scale the drawing - any errors or omissions shall be reported to Stantec without delay.
The Copyrights to all designs and drawings are the property of Stantec. Reproduction or use for any purpose other than that authorized by Stantec is forbidden.

Legend

- PROPOSED SILT FENCE BOUNDARY AS PER OPSD 219.110
- PROPOSED CATCH BASIN PROTECTION AS PER FLEX STORM INLET FILTERS DETAIL. ITEM CODE P-RD-240-223-FX
- PROPOSED CATCH BASIN MH PROTECTION AS PER FLEX STORM INLET FILTERS DETAIL. ITEM CODE P-RD-290-270-FX
- PROPOSED CATCH BASIN PROTECTION AS PER TERRAFIX SILTSACK DETAIL
- PROPOSED MUD MAT LOCATION
- PROPOSED VALVE BOX
- PROPOSED VALVE CHAMBER
- PROPOSED FIRE HYDRANT
- PROPOSED SANITARY SEWER MANHOLE
- PROPOSED STORM SEWER MANHOLE
- PROPOSED CATCHBASIN MANHOLE
- PROPOSED CATCHBASIN

Best Management Practices

CONTRACTOR TO PROVIDE EROSION AND SEDIMENT CONTROLS (BEST MANAGEMENT PRACTICES) DURING CONSTRUCTION OF THIS PROJECT.

EROSION MUST BE MINIMIZED AND SEDIMENTS MUST BE REMOVED FROM CONSTRUCTION SITE RUN-OFF IN ORDER TO PROTECT DOWNSTREAM AREAS. DURING ALL CONSTRUCTION, EROSION AND SEDIMENTATION SHOULD BE CONTROLLED BY THE FOLLOWING TECHNIQUES:

1. LIMIT THE EXTENT OF EXPOSED SOILS AT ANY GIVEN TIME.
2. REVEGETATE EXPOSED AREAS AND SLOPES AS SOON AS POSSIBLE.
3. MINIMIZE AREA TO BE CLEARED AND GRUBBED.
4. PROTECT EXPOSED SLOPES WITH PLASTIC OR SYNTHETIC MULCHES.
5. INSTALL CATCH BASIN INSERTS OR EQUIVALENT IN ALL PROPOSED CATCH BASINS AND CATCH BASIN MANHOLES AND IN ALL EXISTING CATCH BASINS THAT WILL RECEIVE RUN-OFF FROM THE SITE.
6. A SILT FENCE SHALL BE INSTALLED AROUND THE PERIMETER OF ALL AND ANY STOCKPILES OF MATERIAL TO BE USED OR REMOVED FROM SITE. (LOCATION TO BE DETERMINED)
7. A VISUAL INSPECTION SHALL BE DONE DAILY AND FOLLOWING ALL RAINFALL EVENTS ON SEDIMENT CONTROL MEASURES AND CLEANED OF ANY ACCUMULATED SILT AS REQUIRED. THE DEPOSITS WILL BE DISPOSED OFF SITE AS PER THE REQUIREMENTS OF THE CONTRACT.
8. SEDIMENT CONTROL BARRIERS MAY ONLY BE REMOVED TEMPORARILY WITH APPROVAL OF CONTRACT ADMINISTRATOR TO ACCOMMODATE CONSTRUCTION OPERATIONS. ALL AFFECTED BARRIERS MUST BE REINSTATED AT NIGHT WHEN CONSTRUCTION IS COMPLETED. NO REMOVAL WILL OCCUR IF THERE IS A SIGNIFICANT RAINFALL EVENT ANTICIPATED (>10mm) UNLESS A NEW DEVICE HAS BEEN INSTALLED TO PROTECT EXISTING STORM AND SANITARY SEWER SYSTEMS, OR DOWNSTREAM WATERCOURSES.
9. NO REFUELING OR CLEANING OF EQUIPMENT IS PERMITTED NEAR ANY EXISTING WATERWAY.
10. CONTRACTOR SHALL REMOVE SEDIMENT CONTROL MEASURES WHEN, IN THE OPINION OF THE CONTRACT ADMINISTRATOR, THE MEASURE(S) IS NO LONGER REQUIRED. NO CONTROL MEASURES SHALL BE PERMANENTLEY REMOVED WITHOUT PRIOR WRITTEN AUTHORIZATION FROM THE CONTRACT ADMINISTRATOR.
11. THE CONTRACTOR SHALL PERIODICALLY, OR WHEN REQUESTED BY THE CONTRACT ADMINISTRATOR, CLEAN OUT ACCUMULATED SEDIMENTS AS REQUIRED.
12. THE CONTRACTOR SHALL IMMEDIATELY REPORT TO THE ENGINEER ANY ACCIDENTAL DISCHARGES OF SEDIMENT MATERIAL INTO THE WATERCOURSE. APPROPRIATE RESPONSE MEASURES, INCLUDING ANY REPAIRS TO EXISTING CONTROL MEASURES OR THE IMPLEMENTATION OF ADDITIONAL CONTROL MEASURES, SHALL BE CARRIED OUT BY THE CONTRACTOR WITHOUT DELAY.
13. CONTRACTOR SHALL INSTALL MUD MATS AT ENTRANCE TO THE SITE.
14. STORMWATER SWALES TO BE COVERED WITH HYDRO-SEED AND MULCH.
15. THE CONTRACTOR IS RESPONSIBLE TO KEEP THE ROADS FREE AND CLEAN FROM MUD AND DEBRIS.
16. THE SEDIMENT AND EROSION CONTROL MEASURES MAY BE MODIFIED IN THE FIELD AT THE DISCRETION OF THE CITY OF OTTAWA SITE INSPECTOR OR CONSERVATION AUTHORITY.

9	REVISED AS PER CITY COMMENTS	MJS	DT	23.06.30
8	REVISED WATER SERVICING	MJS	DT	23.03.10
7	REVISED ADS SYSTEM	MJS	DT	23.02.13
6	ISSUED FOR SPA AMENDMENT	MJS	DT	22.12.22
5	REVISED AS PER CITY COMMENTS	MJS	DT	22.07.14
4	REVISED AS PER CITY COMMENTS	MJS	DT	22.03.29
3	REVISED AS PER CITY COMMENTS	MJS	TR	21.09.02
2	ISSUED FOR GEOTECH REVIEW	MJS	DT	21.08.03
1	ISSUED TO CITY FOR SPA	MJS	DT	20.05.22
Revision		By	Appd.	YY.MM.DD

File Name: 160401511-DB	MJS	DT	MJS	19.09.05
	Dwn.	Chkd.	Dsgn.	YY.MM.DD

Permit-Seal

LICENSED PROFESSIONAL ENGINEER
D. C. THIFFAULT
100186107
2023-06-30
PROVINCE OF ONTARIO

Client/Project

NAUTICAL LANDS GROUP
2962 Carp Road

WELLINGS OF STITTSVILLE PH 2
20 CEDAROW COURT
OTTAWA, ON

Title

EROSION CONTROL PLAN AND DETAIL SHEET

Project No. 160401511
Scale

Drawing No. EC/DS-1
Sheet 5 of 7
Revision 9

PLAN No. 18190

D07-12-23-0004

W:\active\160401511\design\drawing\160401511-DB 2.dwg
2023/06/30 10:52 AM By: Thiffault, Dustin

ORIGINAL SHEET - ARCH D