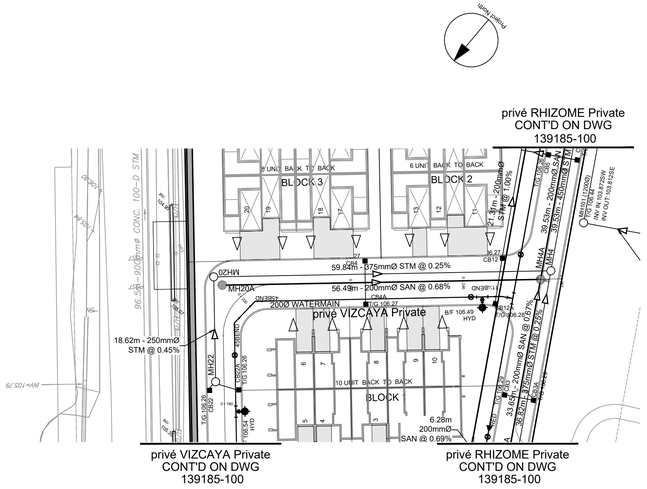

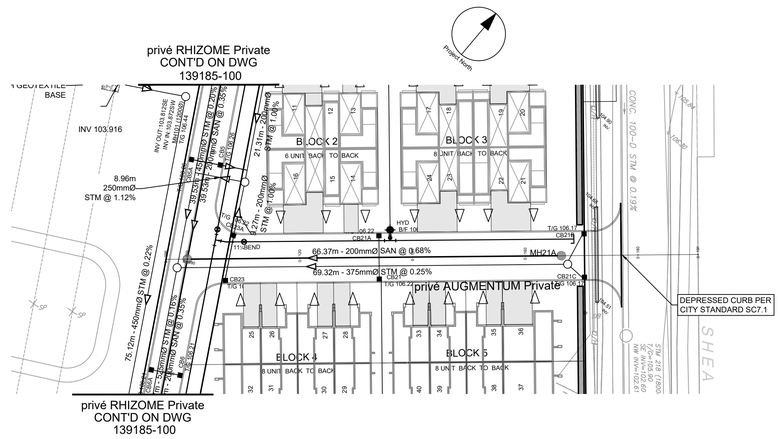

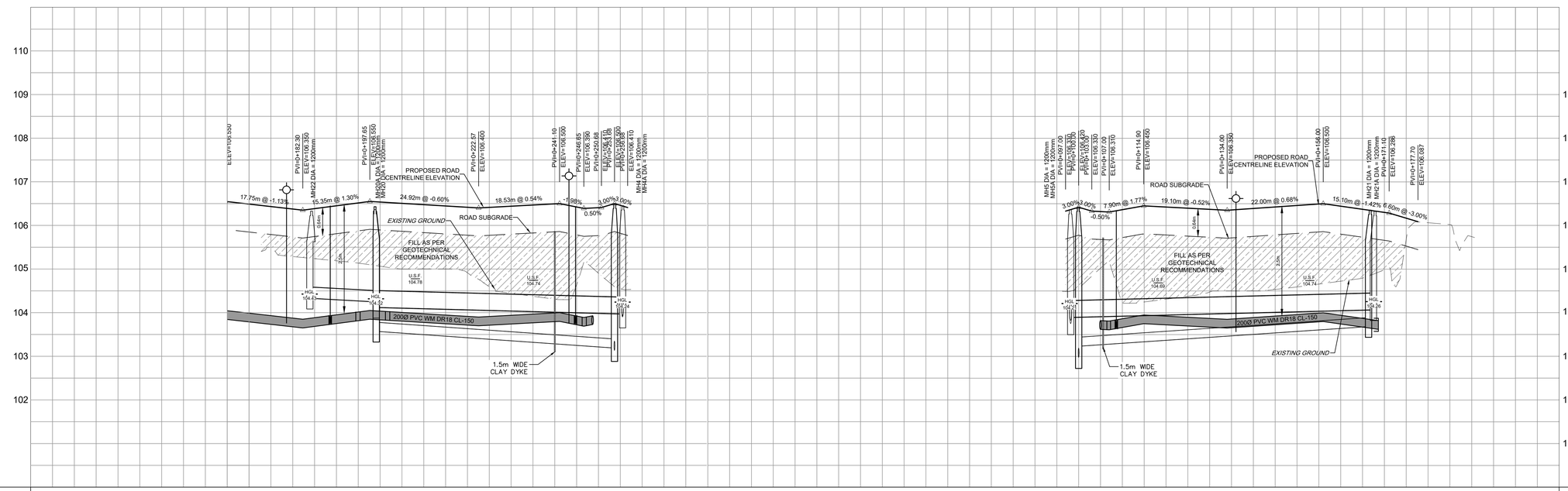

ROAD GRADE	106.376 106.350 / 106.550 106.536 / 106.415 106.400 / 106.404 106.500 / 106.390 / 106.410 / 106.500 / 106.410	ROAD GRADE
TOP OF WATERMAIN	103.876 103.850 / 104.050 104.036 / 103.915 103.900 / 103.894 103.900 / 103.890 103.929	TOP OF WATERMAIN
STM SEWER INVERT	104.334SE 18.62m 250mmØ PVC DR-35 STM @ 0.45% 104.250NW 104.1425SW / 59.84m - 375mmØ PVC DR-35 STM @ 0.25% / 103.976NE 103.921NW 103.901SE	STM SEWER INVERT
SAN SEWER INVERT	103.576SW / 56.49m - 200mmØ PVC DR-35 SAN @ 0.68% / 103.193NE 103.153NW 103.133SE	SAN SEWER INVERT
STATION	0+176.674 HYD 0+180 / 0+194.44 BEND / 0+200 / 0+220 / 0+240 / 0+260	STATION

ROAD GRADE	106.330 106.420 106.330 / 106.310 / 106.450 / 106.423 / 106.350 / 106.381 / 106.500 106.443 / 106.286 / 106.087	ROAD GRADE
TOP OF WATERMAIN	103.820 103.810 / 103.950 / 103.923 / 103.850 / 103.881 / 104.000 103.943 / 103.821	TOP OF WATERMAIN
STM SEWER INVERT	102.746SE 103.824NW 103.899NE / 69.32m - 375mmØ PVC DR-35 STM @ 0.25% / 104.072SW	STM SEWER INVERT
SAN SEWER INVERT	102.976SE 102.996NW 103.226NE / 66.37m - 200mmØ PVC DR-35 SAN @ 0.68% / 103.684SW	SAN SEWER INVERT
STATION	0+080 / 0+100 / 0+120 / 0+136.022 HYD 0+140 / 0+160 / 0+180	STATION

CLIENT

DAVIDSON SHEA PROPERTY INC.

COPYRIGHT

This drawing has been prepared solely for the intended use, thus any reproduction or distribution for any purpose other than authorized by IBI Group is forbidden. Information shown on this drawing is subject to change without notice. Contractors shall verify and be responsible for all dimensions and conditions on the job, and IBI Group shall be informed of any variations from the dimensions and conditions shown on the drawing. Shop drawings shall be submitted to IBI Group for general conformance before proceeding with fabrication.

IBI Group Professional Services (Canada) Inc.
is a member of the IBI Group of companies

ISSUES

No.	DESCRIPTION	DATE
1	SUBMISSION NO.1 FOR CITY REVIEW	2022-09-15
2	SUBMISSION NO.2 FOR CITY REVIEW	2024-06-27
3	REVISED PER CITY COMMENTS	2025-03-21
4	REVISED PER NEW SITE PLAN	2025-05-12
5	SUBMISSION NO.4 FOR CITY REVIEW	2024-07-31
6		
7		
8		

SEE 010, 011 FOR NOTES, LEGEND, CB TABLE, STREET SECTIONS AND DETAILS

KEY PLAN

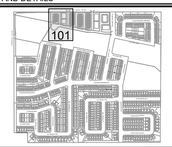

CONSULTANTS

H 1:500 0 5 15 25m
V 1:50 0 0.5 1.5 2.5m

SEAL

LICENSED PROFESSIONAL ENGINEER
L.D. G. Yannoulopoulos
2025/07/31
PROVINCE OF ONTARIO

IBI GROUP
Suite 400 – 333 Preston Street
Ottawa ON K1S 5N4 Canada
tel 613 225 1311 | 613 241 3300 fax 613 225 9868
ibigroup.com

PROJECT

1650 SHEA ROAD

(OTTAWA, ON)

PROJECT NO: 139185	
DRAWN BY: **M.M.**	CHECKED BY: **R.M./D.Y.**
PROJECT MGR: **R.M.**	APPROVED BY: **R.M./D.Y.**

SHEET TITLE

privé VIZCAYA Private
privé AUGMENTUM Private

SHEET NUMBER	ISSUE
101	5

SCALE CHECK 1 cm

File Location: J:\139185_1650_Shea_Rd\7.0_Production\7.03_Design\04_Civil\Sheets\101-LOOP 1.dwg Last Saved: January 30, 2025, by hennieet9008 Plotted: July 30, 2025 4:47:04 PM by Milne, Mariian

CITY FILE No. D07-12-23-0032

CITY PLAN No. 19029