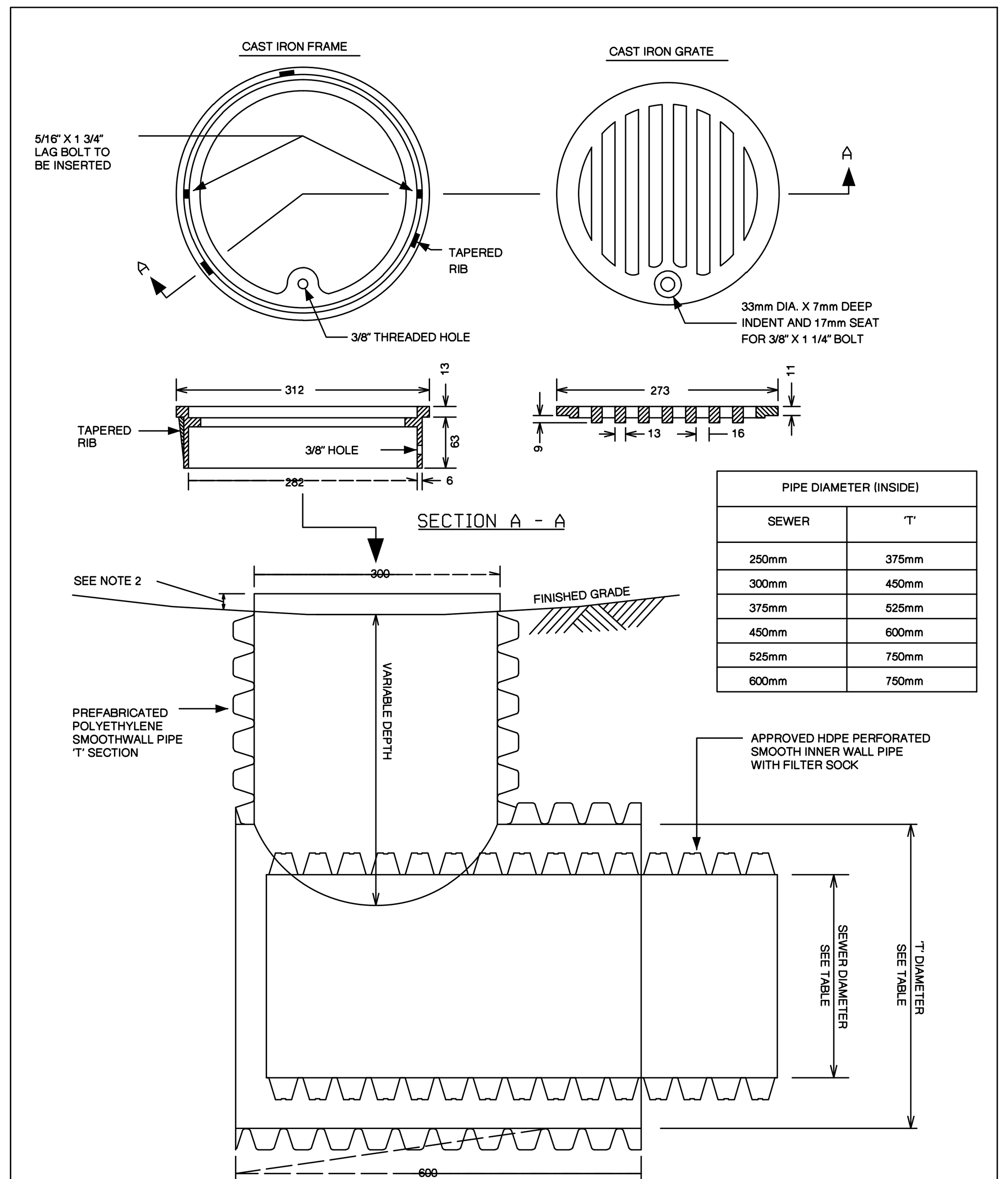

PIPE DIAMETER (INSIDE)	
SEWER	'T'
250mm	375mm
300mm	450mm
375mm	525mm
450mm	600mm
525mm	750mm
600mm	750mm

NOTES:

1. ALL DIMENSIONS ARE IN MILLIMETRES UNLESS OTHERWISE SHOWN.
2. FOR DITCHED PIPE APPLICATIONS, TOP OF CB SHALL BE MIN. 5cm ABOVE BOTTOM OF THE DITCH/SWALE AND BE LOCATED MIN. 2m FROM EDGE OF PAVEMENT.
3. WHEN NON PERFORATED PIPE IS USED, MATCH THE 'T's HORIZONTAL OPENING DIAMETERS TO THE PIPE DIAMETER AND CONNECT WITH MANUFACTURER RECOMMENDED CONNECTION SLEEVE.
4. SEE MS-22.15 FOR ALTERNATE APPROVED FITTING MANUFACTUERS.

Ottawa

CATCH BASIN - ELBOW FOR REAR YARD, DITCHED PIPE AND LANDSCAPING APPLICATIONS

DATE: MARCH 2007
REV. DATE: MARCH 2019
DWG. No.: S31

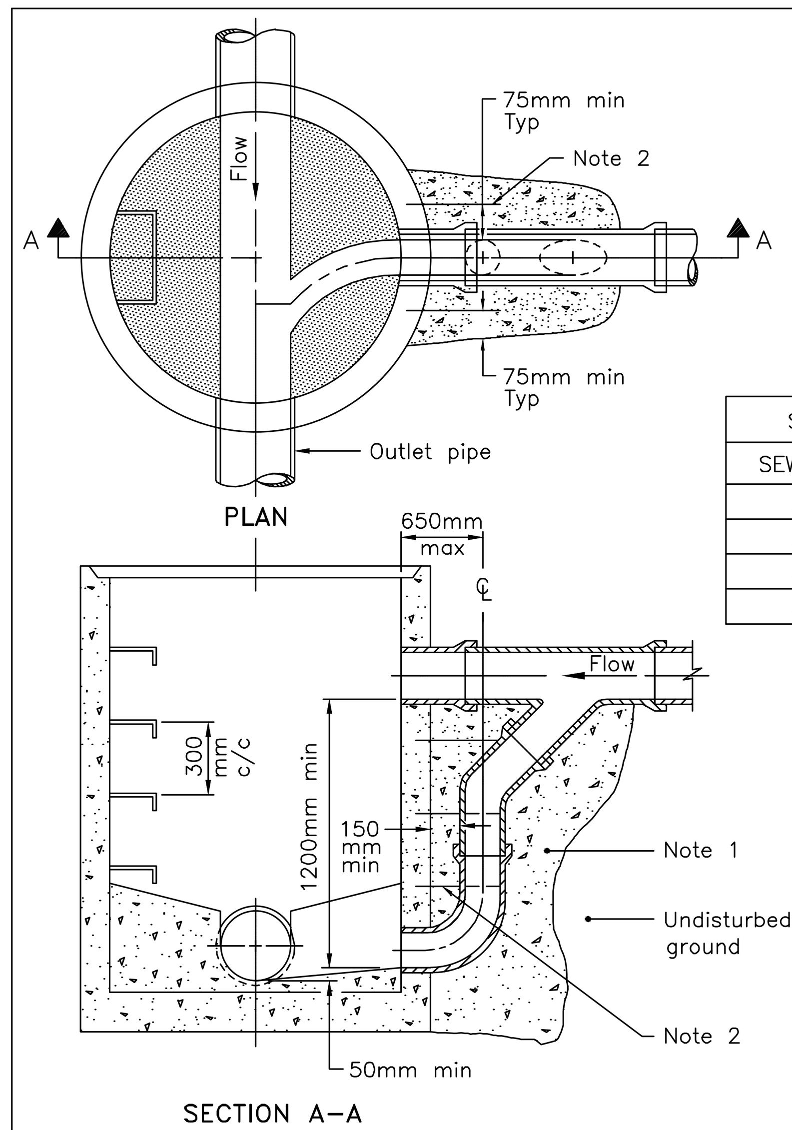

SIZE OF DROP PIPE	
SEWER ID	DROP PIPE ID
200	200
250	200
300	250
375	300

NOTES:

1 Concrete shall be placed to undisturbed ground and the outside face of the maintenance hole, but there shall be a minimum of 150mm of 15MPa concrete around the drop pipe.
2 Concrete shall be secured to the maintenance hole with 450mm long, 13mm diameter threaded rods and drilled expansion anchors down either side of the drop pipe at 300mm centres.
A All dimensions are in millimetres unless otherwise shown.

ONTARIO PROVINCIAL STANDARD DRAWING | Nov 2016 | Rev 3

CAST–IN–PLACE MAINTENANCE HOLE DROP STRUCTURE WYE

OPSD 1003.020

ONTARIO STANDARDS MUNICIPAL–PROVINCIAL

FILENAME: U:\Ottawa\01 Project - Proposals\2023 Jobs\CCO\CCO-23-3287 CSV_Multi-Use Building_3745 St. Joseph Blvd\12 - Drawings\CCO-23-3287 Presentation.dwg
LAST SAVED: Tuesday, May 09, 2023 LAST SAVED BY: F.Valenti
LAST PLOTTED: Friday, May 12, 2023 CTB FILE USED: ----

WATER COVER TABLE

LOCATION	STATION	FINISHED GRADE	TOP OF PIPE	COVER
A - 400 X 150 TEE	0+100.00	63.72	61.32	2.40
11.25° BEND	0+104.19	63.77	61.37	2.40
VALVE	0+109.35	63.87	61.47	2.40
45° BEND	0+133.67	63.58	61.18	2.40
45° BEND	0+134.32	63.58	61.18	2.40
WATER ENTRY	0+134.81	63.60	61.20	2.40
B - 400 X 150 TEE	0+200.00	63.80	61.40	2.40
VALVE	0+201.00	63.79	61.39	2.40
HYDRANT	0+205.00	63.70	61.30	2.40

CROSSING CONFLICT TABLE

LOCATION	DESCRIPTION	SEPARATION
1	PROP. 250mmØ STM SERVICE INV 58.21 EX. 300mmØ STM SERVICE OBV 57.90	0.31
2	PROP. 250mmØ STM SERVICE INV 58.20 EX. 135mmØ SAN SERVICE OBV 57.82	0.38
3	PROP. 250mmØ STM SERVICE INV 57.75 EX. 250mmØ SAN MAIN OBV 55.77	1.98
4	PROP. 250mmØ SUBDRAIN INV 58.43 EX. 250mmØ SAN MAIN OBV 55.32	3.11

SAN STRUCTURE TABLE

NAME	RIM ELEV.	INVERT IN	INVERT OUT	DESCRIPTION
MH1A	60.46	S57.663	NE57.630	COVER TPYE A FRAME OPSD 401.010 STRUCT. OPSD 701.010

STORM STRUCTURE TABLE

NAME	RIM ELEV.	INVERT IN	INVERT OUT	DESCRIPTION
CB1	60.37	E58.294	S58.250	STRUC: OPSD 705.010 FRAME: CITY S19 COVER: CITY S19
LSCB2	59.44		W58.440	PER CITY STANDARD S31
MH3	60.40	SW57.963 W58.514	E57.930	STRUC: OPSD 701.010 FRAME: CITY S25 COVER: CITY S24.1

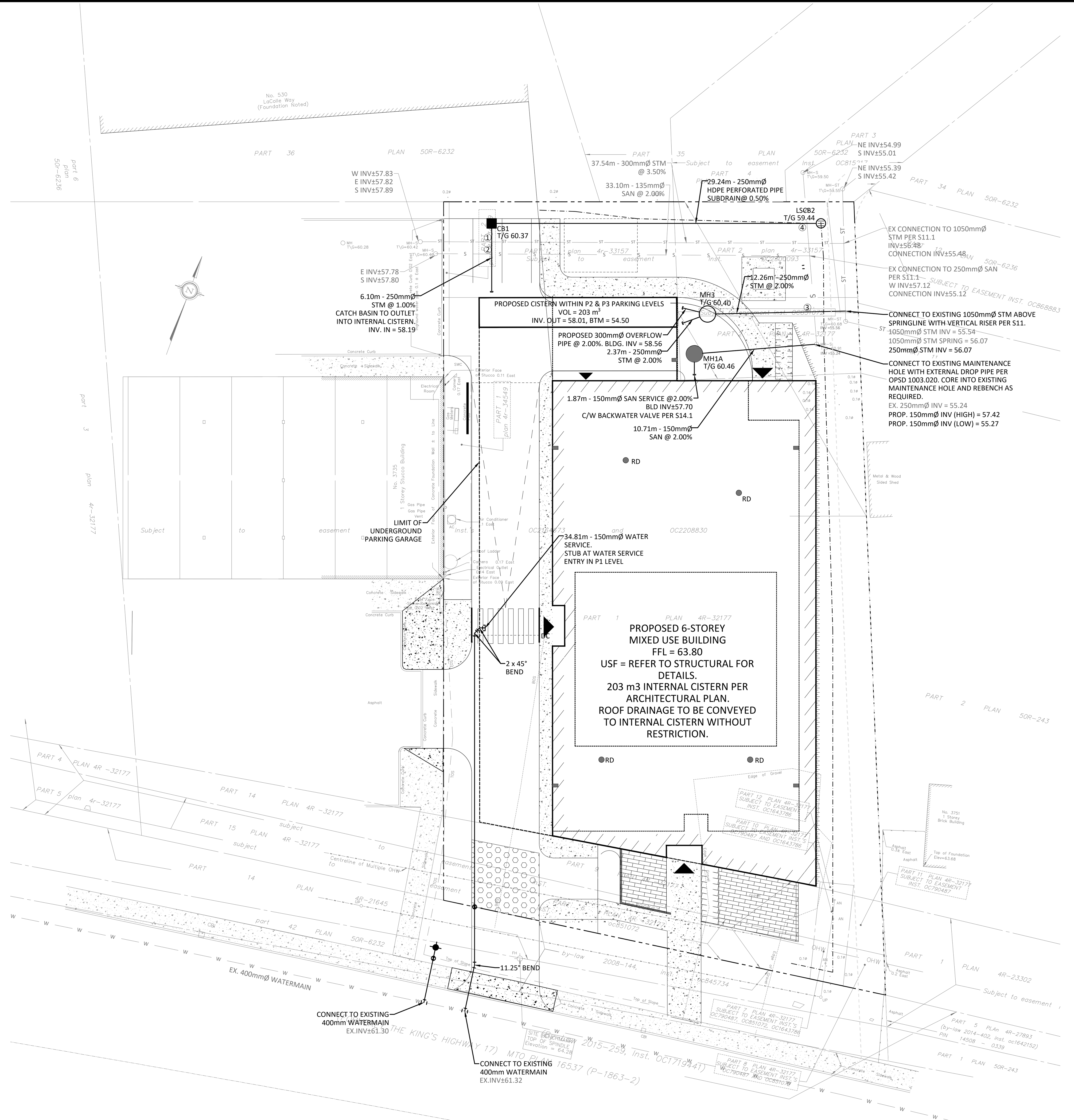

1 / C102 SITE SERVICING PLAN
1 : 250

GENERAL NOTES

1. THE ORIGINAL TOPOGRAPHY, GROUND ELEVATION AND SURVEY DATA SHOWN ARE SUPPLIED FOR INFORMATION PURPOSES ONLY, AND IMPLY NO GUARANTEE OF ACCURACY. IT SHALL BE THE RESPONSIBILITY OF THE CONTRACTOR TO VERIFY ALL INFORMATION SHOWN.
2. THIS PLAN IS NOT A CADASTRAL SURVEY SHOWING LEGAL PROPERTY BOUNDARIES AND EASEMENTS. THE PROPERTY BOUNDARIES SHOWN HEREON HAVE BEEN DERIVED INFORMATION SUPPLIED BY (OR SHOWN ON) ANNIS, O'SULLIVAN, VOLLEBEKK LTD. DRAWING E-2505-22 AND CANNOT BE RELIED UPON TO BE ACCURATE OR COMPLETE. THE PRECISE LOCATION OF THE CURRENT PROPERTY BOUNDARIES AND EASEMENTS CAN ONLY BE DETERMINED BY AN UP-TO-DATE LAND TITLES SEARCH AND A SUBSEQUENT CADASTRAL SURVEY PERFORMED AND CERTIFIED BY AN ONTARIO LAND SURVEYOR.
3. THE CONTRACTOR IS TO OBTAIN AND PAY FOR ALL NECESSARY PERMITS AND APPROVALS FROM THE CITY BEFORE COMMENCING CONSTRUCTION.
4. THE CONTRACTOR IS RESPONSIBLE FOR ALL LAYOUT.
5. THE CONTRACTOR IS TO DETERMINE THE EXACT LOCATION, SIZE, MATERIAL AND ELEVATION OF ALL EXISTING UTILITIES PRIOR TO COMMENCING CONSTRUCTION. PROTECT AND ASSUME ALL RESPONSIBILITY FOR EXISTING UTILITIES WHETHER OR NOT SHOWN ON THESE DRAWINGS. IF THERE IS ANY DISCREPANCY THE CONTRACTOR IS TO NOTIFY THE ENGINEER PROMPTLY.
6. RESTORE ALL TRENCHES AND SURFACES OF PUBLIC ROAD ALLOWANCES TO CONDITION EQUAL OR BETTER THAN ORIGINAL CONDITION AND TO THE SATISFACTION OF THE CITY AUTHORITIES.
7. EXCAVATE AND DISPOSE OF ALL EXCESS EXCAVATED MATERIAL, SUCH AS ASPHALT, CURBING AND DEBRIS, OFF SITE AS DIRECTED BY THE ENGINEER AND THE CITY.
8. TOPSOIL TO BE STRIPPED AND STOCKPILED FOR REHABILITATION. CLEAN FILL TO BE PLACED IN FILL AREAS AND COMPACTED TO 95% STANDARD PROCTOR DENSITY.
9. ALL DISTURBED AREAS TO BE RESTORED TO ORIGINAL CONDITION OR BETTER UNLESS OTHERWISE SPECIFIED.
10. THE CONTRACTOR SHALL BE RESPONSIBLE FOR ALL TRAFFIC CONTROL AND SAFETY MEASURES DURING THE CONSTRUCTION PERIOD, INCLUDING THE SUPPLY, INSTALLATION, AND REMOVAL OF ALL NECESSARY SIGNAGE, DELINEATORS, MARKERS AND BARRIERS.
11. DO NOT ALTER GRADING OF THE SITE WITHOUT PRIOR APPROVAL OF THE ENGINEER/CITY.
12. ALL ROADWAY, PARKING LOT, AND GRADING WORKS TO BE UNDERTAKEN IN ACCORDANCE WITH CITY STANDARDS AND SPECIFICATIONS. THE CONTRACTOR IS TO PROVIDE POSITIVE DRAINAGE AWAY FROM THE BUILDING.
13. CONTACT THE CITY FOR INSPECTION OF ROUGH GRADING OF PARKING LOTS, ROADWAYS AND LANDSCAPED AREAS PRIOR TO PLACEMENT OF ASPHALT AND TOPSOIL. ALL DEFICIENCIES NOTED SHALL BE RECTIFIED TO THE CITY'S SATISFACTION PRIOR TO PLACEMENT OF ANY ASPHALT, TOPSOIL, SEED & MULCH AND/OR SOD.
14. ALL DIMENSIONS AND INVERTS MUST BE VERIFIED PRIOR TO CONSTRUCTION, IF THERE IS ANY DISCREPANCY THE CONTRACTOR IS TO NOTIFY THE ENGINEER PROMPTLY.
15. ELECTRICAL, GAS, TELEPHONE AND TELEVISION SERVICE LOCATIONS ARE SUBJECT TO THE INDIVIDUAL AGENCY:
    - ELECTRICAL SERVICE - HYDRO ONE,
    - GAS SERVICE - ENBRIDGE,
    - TELEPHONE SERVICE - BELL CANADA,
    - TELEVISION SERVICE - ROGERS.
16. INSTALLATION TO BE IN ACCORDANCE WITH CURRENT CODES AND STANDARDS OF APPROVAL AGENCIES HYDRO ONE, BELL AND THE CITY.
17. CONTRACTOR TO ENSURE ALL APPLICABLE OPS SPECIFICATIONS ARE FOLLOWED DURING CONSTRUCTION
18. ALL PROPOSED CURB TO BE CONCRETE BARRIER CURB UNLESS OTHERWISE SPECIFIED.
19. THIS PLAN MUST BE READ IN CONJUNCTION WITH THE GEOTECHNICAL INVESTIGATION COMPLETED BY PATERSON GROUP, DATED AUGUST 10TH, 2018

WATERMAIN NOTES

1. CONSTRUCT ALL WATERMAINS AND APPURTENANCES IN ACCORDANCE WITH OPSD STANDARDS AND SPECIFICATIONS, AS WELL AS CITY STANDARDS.
2. WATERMAINS AND/OR WATER SERVICES ARE TO HAVE A MINIMUM COVER OF 2.4m. OTHERWISE THERMAL INSULATION IS REQUIRED AS PER CITY STANDARDS (IF AVAILABLE) OR OPSD 1109.030.
3. IF THE WATERMAIN MUST BE DEFLECTED TO MEET ALIGNMENT, ENSURE THAT THE AMOUNT OF DEFLECTION USED IS EQUAL TO OR LESS THAN THAT WHICH IS RECOMMENDED BY THE MANUFACTURER.
4. THERMAL INSULATION OF WATERMAINS AT OPEN STRUCTURES AS PER CITY STANDARDS (IF AVAILABLE) OR OPSD 1109.030.
5. VALVES TO BE OPERATED BY CITY STAFF ONLY.
6. NO CONNECTION TO EXISTING WATER NETWORK SHALL BE COMPLETED UNTIL A WATER PERMIT IS OBTAINED FROM THE CITY. CITY TO BE PRESENT FOR WATERMAIN CONNECTION. CONNECTION, EXCAVATION, BACKFILLING AND REINSTATEMENT TO BE COMPLETED BY CONTRACTOR.
7. IT WILL BE THE RESPONSIBILITY OF THE CONTRACTOR TO PERFORM ANY WATERMAIN CONNECTION(S) REQUIRED. THIS SHALL BE COMPLETED IN THE PRESENCE OF A DESIGNATED MUNICIPAL WATER OPERATOR AND THE SELECTED CONTRACTOR SHALL PROVE TO THE SATISFACTION OF THE CITY THAT THEY ARE COMPETENT TO PERFORM THE WORKS PRIOR TO INITIATING CONSTRUCTION.
8. CONCRETE THRUST BLOCKS TO CONFORM TO OPSD 1103.010 AND OPSD 1103.020.
9. ALL WATERMAIN TO BE CLASS 150 DR-18 OR APPROVED EQUIVALENT.
10. ALL WATERMAIN TO BE EQUIPPED WITH TRACER WIRE.

SEWER NOTES:

1. CONSTRUCT ALL SEWERS, CATCH BASINS, MANHOLES AND APPURTENANCES IN ACCORDANCE WITH OPSD STANDARDS AND SPECIFICATIONS, AS WELL AS CITY.
2. SEWER TRENCHING AND BEDDING SHALL CONFORM TO OPSD 802.010 AND 802.013 UNLESS NOTED OTHERWISE.
   - 2.1. BEDDING SHALL BE A MINIMUM 150mm OF GRANULAR "A", COMPACTED TO MINIMUM 95% STANDARD PROCTOR DRY DENSITY. CLEAR STONE BEDDING SHALL NOT BE PERMITTED.
   - 2.2. SUB-BEDDING, IF REQUIRED SHALL CONSIST OF 450mm OF COMPACTED GRANULAR "B" TYPE 1.
   - 2.3. BACKFILL TO AT LEAST 300mm ABOVE TOP OF PIPE WITH GRANULAR "A" OR GRANULAR "B" TYPE 1.
   - 2.4. TO MINIMIZE DIFFERENTIAL FROST HEAVING, TRENCH BACKFILL (FROM PAVEMENT SUBGRADE TO 2.0 METRES BELOW FINISHED GRADE) SHALL MATCH EXISTING SOIL CONDITIONS.
3. SANITARY SEWERS AND CONNECTIONS 150mmØ AND SMALLER TO BE PVC SDR-28.
4. SEWERS AND CONNECTIONS 200mmØ AND LARGER TO BE PVC SDR-35. BEDDING TO BE TYPE "B" EXCEPT AT RISERS, UNLESS NOTED OTHERWISE.
5. INSULATE ALL STORM AND SANITARY SEWERS/SERVICES THAT HAVE LESS THAN 2.0m OF COVER WITH THERMAL INSULATION AS PER OPSD 1109.030.
6. SEWER CONNECTIONS ARE TO BE MADE ABOVE THE SPRINGLINE OF THE SEWERMAIN AS PER CITY OF OTTAWA STANDARD DRAWING S11, S11.1 & S11.2.
7. SUPPLY AND INSTALL ALL PIPING AND APPURTENANCES AS SHOWN AND DETAILED TO WITHIN 1.0m OF BUILDING. ALL ENDS OF SERVICES TO BE PROPERLY CAPPED AND LOCATED WITH 2"x4"X8' LONG MARKER.
8. CONTRACTOR TO TELEVISE (CCTV) ALL PROPOSED SEWERS ON SITE, OUTLET CONNECTION TO THE MAIN AND PIPES 150mmØ OR GREATER PRIOR TO BASE COURSE ASPHALT. UPON COMPLETION OF CONTRACT, THE CONTRACTOR IS RESPONSIBLE TO FLUSH AND CLEAN ALL SEWERS & APPURTENANCES.
9. DYE TESTING IS TO BE COMPLETED ON SANITARY SERVICE TO CONFIRM PROPER CONNECTION TO SANITARY SEWER MAIN.

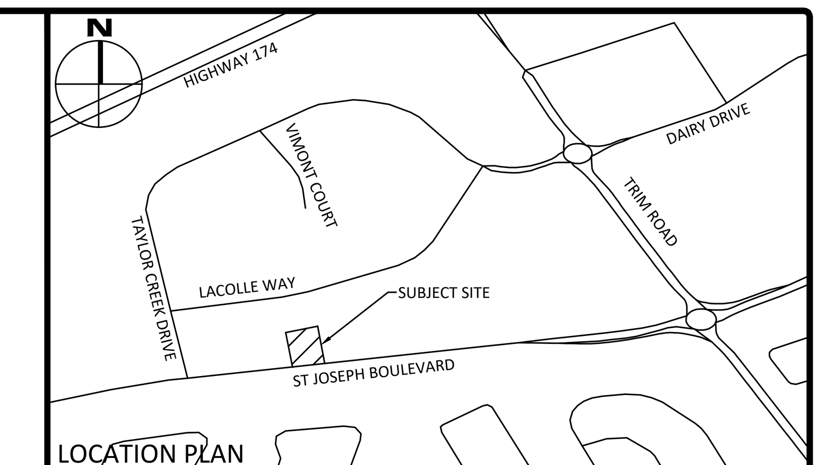

LOCATION PLAN

LEGEND

- CONCRETE BARRIER CURB
- CONCRETE WALKWAY
- PROPOSED ASPHALT
- LSCB# — LANDSCAPING CATCHBASIN
- CBMH# T/G — CATCHBASIN MANHOLE
- CB# T/G — CATCHBASIN
- MH#A T/G — SANITARY SEWER MANHOLE
- HYD B/F — FIRE HYDRANT
- WATER VALVE
- WATER METER
- REMOTE WATER METER
- LIMIT OF CONSTRUCTION
- DRAINAGE SWALE
- DRAINAGE DITCH
- SLOPING AT 3:1 UNLESS SPECIFIED
- 95.50 — SURFACE ELEVATION
- 95.50 (S) — SWALE ELEVATION
- T/W 95.50 B/W 94.25 — TOP OF WALL ELEVATION BOTTOM OF WALL ELEVATION
- OVERLAND FLOW ROUTE
- SILT FENCE BARRIER
- STRAW BALE CHECK DAM
- MUD MAT

FOR REVIEW ONLY
NOT FOR CONSTRUCTION

No.	Revisions	Date
1	ISSUED FOR REVIEW	MAY 12, 2023

Check and verify all dimensions before proceeding with the work — Do not scale drawings

SCALE 1 : 250 (0 5 10 15 20 25 Metres)

McINTOSH PERRY
115 Walgreen Road, RR3, Carp, ON K0A 1L0
Tel: 613-836-2184 Fax: 613-836-3742
www.mcintoshperry.com

LICENSED PROFESSIONAL ENGINEER
C. A. MACLEOD
100159106
MAY 12, 2023
PROVINCE OF ONTARIO

Client:
CSV ARCHITECTS
190 O'CONNOR STREET, SUITE 100
OTTAWA, ON K2P 2R3

Project:
MIXED USE BUILDING
3745 ST. JOSEPH BOULEVARD

Drawing Title:
SITE SERVICING PLAN

Scale: 1:250	Project Number: CCO-23-3287
Drawn By: NV	
Checked By: AM	Drawing Number: C102
Designed By: NV	

D07-12-XX-XXXX

#XXXXX