WARE MALCOMB

ARCHITECTURE | PLANNING | INTERIORS

BRANDING | CIVIL ENGINEERING

Functional Servicing and Stormwater Management Report

Proposed Industrial Building
2760-2770 Sheffield Road
City of Ottawa, Ontario
K1B 3V9
City File: PC2023-0185

City of Ottawa
Planning Design and Development Department

September 6, 2023

Table of Contents

1. Introduction 4
1.1 Background 4
1.2 Site Description 4
1.3 Proposed Development 6
2. Sanitary Servicing 6
2.1 Existing Sanitary Sewer Infrastructure 6
2.2 Proposed Sanitary Servicing 6
3. Water Supply and Distribution 7
3.1 Existing Water Infrastructure 7
3.2 Proposed Water Service 7
4. Stormwater Management 9
4.1 Existing Drainage Conditions 9
4.2 Proposed Drainage Conditions 11
4.3 Quantity Controls 13
4.4 Quality Control 14
5. Erosion and Sediment Control 16
6. Conclusions and Recommendations 17

Table of Figures

Figure 1: Site Location Plan.....5

Appendices

Appendix A – Sanitary Servicing Calculations

Appendix B – Water Supply and Distribution Calculations

Appendix C – Stormwater Management Calculations

Appendix D – Geotechnical Report

Appendix E – Supporting Documentation

Appendix F – Drawing Set

Drawing List

C1.0 - Cover Page
C1.1 – Construction Notes
C2.0 – Pre-Development Drainage Plan
C3.0 – Post Development Drainage Plan
C4.0 – Site Grading Plan
C5.0 – Site Servicing Plan
C6.0 – Erosion and Sediment Control Plan
C6.1 – Erosion and Sediment Control Details
C7.0 – Details Plan
C7.1 – Details Plan
C7.2 – Details Plan

1. Introduction

1.0 Background

Ware Malcomb has been retained by Richcraft Properties to prepare a Functional Servicing Report in support of a Site Plan and Building Permit Application for the proposed development. The development is located at 2760-2770 Sheffield Road in the City of Ottawa. The purpose of this report is to:

- Calculate existing and proposed sanitary sewer capacity based on proposed industrial use
- Assess and confirm adequate supply and onsite distribution of municipal water to meet domestic and fire flow requirements
- Assess the requirement for stormwater management on-site including:
  - Evaluation of pre-development site conditions to determine allowable release rates
  - Evaluation of post-development site conditions based on land use
  - Development of stormwater management control measures to ensure the quantity and quality of stormwater is acceptable based on municipal and provincial regulations
  - Development of erosion and sediment control measures and practices to ensure the mitigation of sediment within surface runoff

The following documents and manuals were used to confirm conformance with municipal and provincial regulations:

- *Sewer Design Guidelines – Second Edition*, City of Ottawa, October, 2012
- *Ottawa Design Guidelines – Water Distribution – First Edition,* City of Ottawa, July, 2010
- *Stormwater Management Planning and Design Manual*, Ontario Ministry of Environment and Climate Control, 2003
- *Guidelines for the Design of Sanitary Sewage Works and Water Works,* Ontario Ministry of Environment and Climate Control, 2008
- *Design Guidelines for Drinking Water Systems*, Ontario Ministry of Environment and Climate Control, 2008
- *Ontario Building Code* – (O.B.C), 2012
- *Drainage Management Manual* – Ontario Ministry of Transportation, 1997
- *Water Supply for Public Fire Protection in Canada* – Fire Underwriters Survey, 2020

1.1 Site Description

The subject site is bounded by Sheffield Road to the east and Lancaster Road to the west and is approximately 500m north of Walkley Road within the City of Ottawa. Refer to

Figure **1** for the site location plan. The site has a total area of 8.45 ha and is currently developed with 5 warehouse buildings and a CNR (Canadian National Railway) corridor splitting the 4 warehouse buildings fronting Sheffield Road and 1 warehouse building fronting Lancaster. The site is currently occupied. The

site is divided into two drainage areas. The 4 warehouse buildings fronting Sheffield Road drain onto Sheffield Road, which outlets to the Bantree trunk sewer. The 1 warehouse building fronting Lancaster Road drains onto Lancaster Road, which outlets to the Walkley trunk sewer. The CNR corridor also drains southeast towards the Walkley trunk sewer. It is legally described as Part of Block A, Registered Plan 4M-121 and Part of Lots 24 and 25, Concession 3 (Ottawa Front) in the Geographic Township of Gloucester, City of Ottawa. The topographical information is based on a survey completed by Annis, O'Sullivan, Vollebekk Ltd., dated November 18th, 2022, as well as, an aerial map from Google Imagery.

Figure 1: Site Location Plan

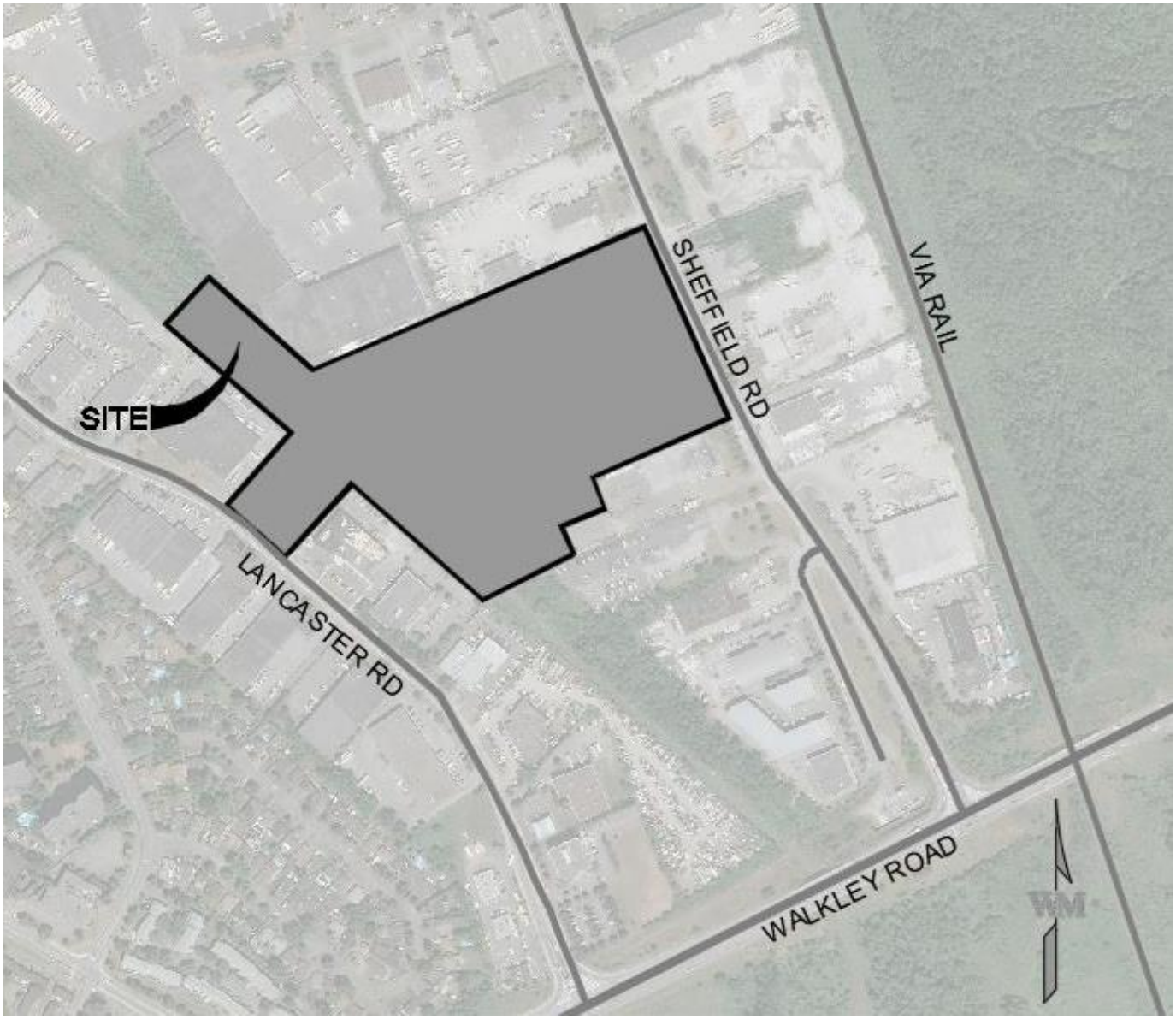

1.2 Proposed Development

The proposed development includes the construction of one industrial building (GFA = 10,477m^2) with associated parking and loading areas. The proposed building will have car access off of Lancaster Road. Trucks will enter off of Sheffield to access the Loading Bays. There will also be a 1,881m^2 reduction for one of the existing industrial buildings (Building 4). The development will be designed to maintain the existing drainage patterns and match existing grades at property boundaries. Refer to Servicing and Grading Plans (C4.0 to C5.0) for the proposed servicing and grading designs.

2. Sanitary Servicing

2.0 Existing Sanitary Servicing

Existing plan and profile drawings were obtained from the City of Ottawa which indicate the existing municipal sanitary sewer infrastructure for both Sheffield Road and Lancaster Road. As the site is currently developed, it is generating sanitary sewerage flows in it's existing condition. Both properties have an internal 200mm diameter PVC sanitary service that connect to an existing 250mm diameter sanitary sewer located on Sheffield Road and an existing 375mm diameter sanitary sewer located on Lancaster Road which conveys sewage flows downstream to a 375mm diameter sanitary trunk sewer located on Leeds Avenue and a 450mm diameter sanitary trunk sewer located on Walkley Road, respectively. Refer to Appendix E for City of Ottawa As-Built drawing sheets. The City design criteria specifies an average wastewater flow of 35.0 m^3/ha/day for light industrial development with a peaking factor of 1.5 and a peak extraneous flow of 0.28 L/s/ha. Based on a total developable area of 0.48 ha for the property fronting Lancaster Road and 5.72 ha for the property fronting Sheffield Road, the projected daily average and peak sewage flows in its existing condition are summarized in the table below:

	Lancaster Road		Sheffield Road	
Average Daily Demand (Design)	16.8	m^3/d	200.2	m^3/d
	0.19	L/s	2.32	L/s
Peak Hour Flow (Design)	36.8	m^3/d	438.7	m^3/d
	0.43	L/s	5.08	L/s

2.1 Proposed Sanitary Servicing

The proposed development will be serviced with one (1) 200mm diameter PVC sanitary sewer that will connect to a proposed sanitary doghouse manhole (SAN DOGHOUSE MH01) installed along the existing 375mm diameter sanitary sewer located on Lancaster Road. The proposed sanitary connections have been designed based on the City of Ottawa's *Sewer Design Guidelines.*

The City design criteria specifies an average wastewater flow of 35.0 m^3/ha/day for light industrial development with a peaking factor of 1.5 and a peak extraneous flow of 0.28 L/s/ha. Based on a total developable area of 0.48 ha for the property fronting Lancaster Road and 5.72 ha for the property

fronting Sheffield Road, the projected daily average and peak sewage flows in its proposed condition are summarized in the table below:

	Lancaster Road		Sheffield Road	
Average Daily Demand (Design)	95.6	m^3/d	200.2	m^3/d
	1.50	L/s	2.32	L/s
Peak Hour Flow (Design)	209.4	m^3/d	438.7	m^3/d
	2.42	L/s	5.08	L/s

A detailed review of the proposed sewers indicate that sufficient capacity is available for the addition of the proposed industrial building and existing development. Refer to Site Servicing Plan C5.0 for the proposed Sanitary Servicing layout and Appendix A for detailed Sanitary demand calculations.

3. Water Supply and Distribution

3.1 Existing Water Servicing

Existing plan and profile drawings were obtained from the City of Ottawa which indicate the existing municipal watermain infrastructure. As the site is currently developed, it generates water demands in its existing condition. There is an existing 300mm diameter watermain on both Lancaster Road and Sheffield Road. For the property fronting Sheffield Road, there are three separate water service connections from the 300mm diameter watermain to existing building 3B, 3C and 4. Refer to Appendix E for City of Ottawa As-Built drawing sheets and Appendix D for the Site Plan. The existing domestic demand was calculated using the City *Light Industrial* design criteria of 35.0 m^3/ha/day. The City also specifies a maximum day factor of 1.5 and maximum hourly factor of 2.7. Based on this criterion, the existing daily average, maximum day and maximum hourly daily demands from the subject properties are summarized in the table below:

	Lancaster Road		Sheffield Road	
Average Daily Demand (Design)	16.8	m^3/d	200.2	m^3/d
	0.19	L/s	2.32	L/s
Maximum Day Demand (Design)	25.2	m^3/d	300.3	m^3/d
	0.29	L/s	3.48	L/s
Maximum Hourly Flow (Design)	45.4	m^3/d	540.5	m^3/d
	0.53	L/s	6.26	L/s

3.2 Proposed Water Servicing

A *Water Systems* Analysis has yet to be completed by Ware Malcomb for the proposed development. We suggest that the City review the watermain design requirements for this development with respect to the City's water treatment and supply capacities and confirm that capacity allocation is available for this development. Given the size and location of this development, this is not expected to be a concern. The proposed domestic demand was calculated using the City *Light Industrial* design criteria of 35.0

m^3/ha/day. The City also specifies a maximum day factor of 1.5 and maximum hourly factor of 2.7. It is anticipated that the 300mm diameter watermain will provide adequate pressures and flow rates to service the site. Refer to Appendix B for detailed calculations.

Based on the above design criteria, the projected daily average, maximum day and maximum hourly daily demands from the subject properties are summarized in the table below:

	Lancaster Road		Sheffield Road	
Average Daily Demand (Design)	95.6	m^3/d	200.2	m^3/d
	1.11	L/s	2.32	L/s
Maximum Day Demand (Design)	143.3	m^3/d	300.3	m^3/d
	1.66	L/s	3.48	L/s
Maximum Hourly Flow (Design)	258.0	m^3/d	540.5	m^3/d
	2.99	L/s	6.26	L/s

The proposed development will front Lancaster Road and will be serviced with one (1) 150mm diameter fire connection stemming off the existing 300mm watermain located along Lancaster Road. A 50mm diameter domestic water service will tee off the fire connection with a 1.2m minimum separation at the property line. Watermains will be installed at the minimum 1.8m depth below finished grade. All systems will be constructed and tested in accordance with the City of Ottawa Engineering Standards and MOE Guidelines.

To determine water pressure under these demands, boundary conditions, based on the City of Ottawa computer simulation of the water distribution system at the subject property, are required. Based on the boundary conditions received from the City, the minimum HGL (Hydraulic Grade Line) is 109.8m and the maximum HGL is 118.0m. With these HGLs, the water pressure at the water meter, based on the Finished Floor Elevation of 67.50m, is calculated to vary from 406 kPa to 487 kPa (59 psi to 71 psi). This is an acceptable range of water pressures for the proposed development. As for the Max Day + FF (150 L/s), the HGL is 102.7m, which corresponds to a water pressure of 336 kPa (49 psi). Minimum pressures during periods of Max Day + FF demand shall not be less than 140 kPa (20psi) for the residual pressure at any point in the distribution system.

In addition to providing water for industrial domestic use, a fire protection system must be designed based on the Fire Underwriters Survey (FUS) and National Fire Protection Association (NFPA) guidelines. The private fire main connections to the site have been designed to comply with NFPA 13 Guidelines. The proposed fire demand for the development was calculated based on the criteria outlined by the Fire Underwriters Survey – refer to detailed calculations in Appendix C. The fire demand for the total development will be 11,032 L/min or 183.9 L/sec. A hydrant flow test will need to be conducted and completed to ensure the minimum required fire flows for the proposed development can be achieved. As part of the fire protection design, fire hydrants will need a maximum of 90m spacing to building faces and 45m to building Siamese connection as per NFPA guidelines. Refer to Servicing Plan C5.0 for the proposed watermain layout.

4. Stormwater Management

A key component of the Development is the need to address environmental and related Stormwater Management (SWM) issues. These are examined in a framework aimed at meeting the City of Ottawa, Rideau Valley Conservation Authority (RVCA) and MOE requirements. SWM parameters have evolved from an understanding of the location and sensitivity of the site's natural systems.

It is understood that the objectives of the SWM plan are to:

- Protect life and property from flooding and erosion;
- Maintain water quality for ecological integrity, recreational opportunities, etc..;
- Protect and maintain groundwater flow regime(s);
- Protect aquatic and fishery communities and habitats;
- Maintain and protect significant natural features;
- Protect and provide diverse recreational opportunities that are in harmony with the environment.

The stormwater management design criteria are specified as part of the City of Ottawa's *Sewer Design Guidelines Manual.* Based on an industrial development with a total developable area of 8.45 ha, the following design criteria were used:

- **Water Quantity:** Post-development flows must be controlled to the following standards:
    - Time of Concentration (Tc) to be 10 minutes;
    - Allowable Flow Rate for Walkley Trunk Sewer: Control the 5-year and 100-year post development storm events to the 5-year pre development storm event;
    - Allowable Flow Rate for Bantree Trunk Sewer: Control the 5-year and 100-year post development storm events to the 2-year pre development storm event;
- **Water Quality:** On-site water quality control to provide 80% enhance level of protection for Total Suspended Solids (TSS) based on Ontario's Ministry of the Environment Conservation and Parks (MECP) Enhanced Level I guidelines.
- **Erosion and Sediment Control:** Erosion and sediment controls must be designed in accordance with Erosion & Sediment Control Guidelines for Urban Construction.

4.1 Existing Drainage Conditions

The subject site (8.45 ha) is currently occupied and is currently being used as office space, cold storage and warehousing space. It is evaluated as having two drainage areas. Drainage Areas X-1 to X-4 and X-15 drain towards Lancaster Road, which outlets to the Walkley trunk sewer. Drainage Areas X-5 to X-14 drain towards Sheffield Road, which outlets to the Bantree trunk sewer. Based on our review of the mapping, topography across the development area is moderately flat. Drainage Areas X-1 to X-4 generally slopes from east to west towards Lancaster Road. Drainage Area X-15 generally slopes from north to south towards Walkley Road. Drainage Areas X-5 to X-14 generally slopes from west to east towards Sheffield Road. Both drainage areas ultimately discharge into the Ottawa River.

Using the Ministry of Transportation SWM Policies and Design Guidelines, the existing site statistics produce the following weighted runoff coefficients:

Drainage Areas X-1 to X-4 and X-15	Area (A)	Runoff Coefficient (R)	AR
Unimproved Lands	22,063 m^2	0.40	8,825.2
Building Roof	1,504 m^2	0.95	1,428.8
Gravel	1,055 m^2	0.60	633.0
Concrete	0 m^2	0.95	0.0
Asphalt	2,080 m^2	0.95	1,976.0
TOTAL	**26,702 m^2**	**0.48**	**12,862.0**

Based on the above site statistics, a weighted runoff coefficient of 0.48 was generated.

Drainage Areas X-5 to X-14	Area (A)	Runoff Coefficient (R)	AR
Unimproved Lands	6,750 m^2	0.40	2,700.0
Building Roof	20,219 m^2	0.95	19,208.1
Gravel	16,022 m^2	0.60	9,613.2
Concrete	0 m^2	0.95	0.0
Asphalt	14,761 m^2	0.95	14,022.9
TOTAL	**57,752 m^2**	**0.79**	**45,544.3**

Based on the above site statistics, a weighted runoff coefficient of 0.79 was generated.

Given the size and nature of the size, the Modified Rational Method will be used to determine the pre development release rates:

Catchment Area (X-1 to X-4 and X-15)	= 2.67 ha
Catchment Area (X-5 to X-14)	= 5.78 ha
Runoff Coefficient	= 0.48
Runoff Coefficient	= 0.79
Time of Concentration (t_c)	= 10 minutes
Rainfall Intensity	= City of Ottawa Curve Parameters
Peaking Factor (C_i)	= 1.00 (2-10 year design periods)
	= 1.10 (25 year design period)
	= 1.20 (50 year design period)
	= 1.25 (100 year design period)
Peak Runoff Rate (Q_r)	= $C \times I \times A \times 360^{-1}$

Applying the above results produces the following allowable release rates:

	2 year (m^3/s)	5 year (m^3/s)	10 year (m^3/s)	25 year (m^3/s)	50 year (m^3/s)	100 year (m^3/s)
Lancaster - Pre-Development (X-1 to X-4 and X-15)	0.27	0.37	0.44	0.57	0.69	0.80
Sheffield - Pre-Development (X-5 to X-14)	0.97	1.31	1.55	2.01	2.45	2.82

4.2 Proposed Drainage Conditions

The proposed Development will increase the imperviousness of the site and it is important to quantify this increase in stormwater runoff rates for proper sizing of on-site controls with downstream facilities. Section 3.1 outlined that the site will be split into two major drainage areas. For Drainage Areas (P-1 to P-14 and P-24) discharging towards Lancaster Road, the storm servicing will outlet to a proposed storm doghouse manhole (STM DOGHOUSE MH01) along the existing 1350mm diameter storm sewer on Lancaster Road by means of one (1) 1050mm diameter storm sewer. For Drainage Areas (P-15 to P-23) discharging towards Sheffield Road, the storm servicing will continue to outlet to existing manholes located along the existing 750mm diameter storm sewer on Sheffield Road as no changes are anticipated.

Using the Ministry of Transportation SWM Policies and Design Guidelines, the proposed site statistics produce the following weighted runoff coefficients:

Drainage Areas P-1 to P-15 and P-25 to P-26	Area (A)	Runoff Coefficient (R)	AR
Unimproved Lands	6,849 m^2	0.40	2,739.6
Building Roof	12,067 m^2	0.95	11,463.7
Gravel	0 m^2	0.60	0.0
Concrete	5,829 m^2	0.95	5,537.6
Asphalt	17,724 m^2	0.95	16,837.8
TOTAL	**42,469 m^2**	**0.86**	**36,578.7**

Based on the above site statistics, a weighted runoff coefficient of 0.86 was generated.

Drainage Areas P-16 to P-24	Area (A)	Runoff Coefficient (R)	AR
Unimproved Lands	4,094 m^2	0.40	1,637.6
Building Roof	18,388 m^2	0.95	17,468.6
Gravel	6,270 m^2	0.60	3,762.0
Concrete	0 m^2	0.95	0.0
Asphalt	13,233 m^2	0.95	12,571.4
TOTAL	**41,985 m^2**	**0.84**	**35,439.6**

Based on the above site statistics, a weighted runoff coefficient of 0.84 was generated.

Given the size and nature of the size, the Modified Rational Method will be used to determine the post development release rates:

Catchment Area (P-1 to P-15 and P-25 to P-26)	= 4.25 ha
Catchment Area (P-16 to P-24)	= 4.20 ha
Runoff Coefficient	= 0.86
Runoff Coefficient	= 0.84
Time of Concentration (t_c)	= 10 minutes
Rainfall Intensity	= City of Ottawa Curve Parameters
Peaking Factor (C_i)	= 1.00 (2-10 year design periods)
	= 1.10 (25 year design period)
	= 1.20 (50 year design period)
	= 1.25 (100 year design period)
Peak Runoff Rate (Q_r)	= C x I x A x 360^{-1}

Applying the above results produces the following allowable release rates:

	2 year (m^3/s)	5 year (m^3/s)	10 year (m^3/s)	25 year (m^3/s)	50 year (m^3/s)	100 year (m^3/s)
Lancaster - Post-Development w/o Attenuation (P-1 to P-15 and P-25 to P-26)	0.78	1.06	1.24	1.61	1.97	2.27
Sheffield - Post-Development w/o Attenuation (P-16 to P-24)	0.76	1.03	1.20	1.57	1.91	2.20

Based on the above results, an increase in stormwater runoff rates towards Lancaster Road can be expected during the modelled storm events and as such, attenuation of runoff will be required. As for Sheffield Road, a decrease in stormwater runoff can be expected during the modelled storm events and as such, attenuation of runoff will not be required.

4.3 Quantity Controls

According to the City of Ottawa design criteria, allowable flow rates for both Walkley and Bantree Trunk Sewers are as follows:

- Allowable Flow Rate for Walkley Trunk Sewer: Control the 5-year and 100-year post development storm events to the 5-year pre development storm event;
- Allowable Flow Rate for Bantree Trunk Sewer: Control the 5-year and 100-year post development storm events to the 2-year pre development storm event.

Since Sheffield Road experiences a decrease in stormwater runoff, attenuation will not be required. As for Lancaster Road, the 5-year allowable pre-development flow rate is 372.28 L/s, based on the existing

developable site. Therefore, stormwater management measures must be designed to control the 5-year to 100-year post-development storm events to below the allowable flow rate. Calculations have been included within Appendix C.

The development of this Site increases the existing stormwater runoff rate above that of the allowable release rate for Drainage Areas discharging towards Lancaster Road. Therefore, site quantity controls have been designed to closely approximate the allowable release rates. For quantity control, the site has been graded such that the stormwater will be captured by catch basins and catch basin manholes. The stormwater runoff will be controlled by rooftop storage, as well as, subsurface storage in the form of a Greenstorm system. Release from the rooftop surface will be controlled by roof drains while release from pavement/hardened surface areas will be controlled by an outlet plate sized using the following equation:

$Q = cA\sqrt{2gh}$

Q = allowable release rate
A = orifice area = $0.049m^2$ (250mm dia)
c = orifice coefficient = 0.63
g = gravitational constant = $9.81m/s^2$
h = high water level over center of orifice

Applying the above equation, we find that a 250mm orifice plate installed at STM CBMH10 will restrict the flows such that the controlled stormwater flows from the site are at a rate of less than the 5-year allowable release rate. The Pre and Post Development calculated release rates for the proposed development are detailed below. Calculations have been included within Appendix A.

	Design Storm Event Release Rate (m^3/s)					
	2 yr	5 yr	10 yr	25 yr	50 yr	100 yr
Allowable Release Rate	0.27	0.37	0.44	0.57	0.69	0.80
Post Development with Attenuations	0.14	0.18	0.21	0.26	0.30	0.34
Storage Volume Required (m^3)	356	490	579	763	938	1086

Quantity storage requirements within the subject site are calculated to be approximately $1086m^3$. The total available quantity control volume on site is approximately $1426m^3$, which exceeds storage requirements. This includes pipe and manhole structures along with a proposed stormwater management facility (Greenstorm System) that has been sized to have a total combined available quantity control volume of about $903m^3$, accompanied by rooftop storage, which will generate approximately $523m^3$. Detailed calculations have been provided in Appendix C.

As mentioned above, it is proposed to discharge the controlled storm water runoff from the subject site to a proposed storm doghouse manhole (STM DOGHOUSE MH01) located on Lancaster Road, where stormwater is conveyed along the 1375mm diameter trunk sewer towards Walkley Road and ultimately into the Ottawa River.

4.4 Quality Control

The MOE issued a "Stormwater Management Planning and Design Manual" in 2003. This manual has been adopted by a variety of agencies including the City of Orillia. The objective of our SWM quality control will be to ensure MOE's Enhanced Protection is met. To achieve Enhanced Protection, temporary and permanent controls of erosion and sediment transport are proposed and are discussed in the following sections.

Stormwater Quality Control During Construction

To ensure stormwater quality control during construction, it is imperative that effective environmental and sedimentation controls be in place throughout the entire area subject to construction activities. With the requirement of earth grading, there will be a potential of soil erosion. It is therefore recommended that the following be implemented to assist in achieving acceptable stormwater runoff quality:

- Restoration of exposed surfaces with vegetation and non-vegetative material as soon as construction schedules permit;
- Installation of temporary sediment ponds, filter strips, silt fences and rock check dams or other similar facilities throughout the site, and specifically during all construction activities;
- Reduce stormwater drainage velocities where possible;
- Ensure that disturbed areas that are left inactive for more than 30 days shall be vegetated and stabilized as instructed by the Engineer;
- Minimize the amount of existing vegetation removed.

Permanent Quality Control

The objective of the permanent SWM quality controls will be to ensure MOE's Enhanced Protection. The proposed development will increase the imperviousness of the site. It is important to quantify this increase to evaluate the potential downstream impacts. As per the site's assumed statistics for the developable area, the post development Total Imperviousness (TIMP) is:

Area of Building = 12,067m^2
Area of Asphalt = 17,724m^2
Area of Concrete = 5,829m^2
Area of Landscape = 6,849m^2
Total Area = 42,469m^2

$$\text{TIMP} = (A_{BLD} + A_{ASP} + A_{CONC}) / A_{TOTAL}$$
$$= (35{,}620) / 42{,}469$$
$$= 0.838 \text{ OR } (84\%)$$

Given the nature of the site, and the unfavorable on-site soil conditions, it is proposed to utilize end of pipe facilities to provide quality control in a treatment train process. On-site controls in the form of an Oil-Grit Separator is an appropriate alternative to addressing quality controls for runoff from the pavement hardened surfaces.

Oil/Grit Separator (OGS)

To address stormwater quality, the City of Ottawa specifies a target water quality level of 80% TSS removal for the site based on MECP Enhanced Level I guidelines. The water quality target can be met through the use of on-site quality control measures approved by the MECP and the City of Ottawa.

The table below summarizes the total TSS removal for the site based on accepted rates for water quality. Rooftop coverage comprises 28.69% of the total site area and is considered to produce clean stormwater runoff. Rooftop drainage will bypass the Oil-Grit Separator. The remainder of the site, including paved and landscaped areas, accounts for 71.31% of the total site area. The table below shows that the total TSS removal for the site is 35.05%, which is below the 80% TSS removal target set by the MECP and City of Ottawa. Therefore, on-site quality control measures will be required to achieve a long-term average removal of 80% on an annual loading basis.

Type of Land Use/Surface	Stormwater Quality Breakdown – TSS Removal			
	Area (ha)	% of Developable Area	Effective TSS Removal	Total TSS Removal
Impervious Paved Areas	2.36	56.19%	0.0%	0.0%
Impervious Roof Areas	1.21	28.69%	80.0%	22.95%
Landscaped Areas	0.64	15.12%	80.0%	12.10%
Total	4.21	100%		35.05%

To achieve the MECP Enhanced Level I guidelines, an oil-grit separator (OGS) is being proposed. A Stormceptor or equivalent treatment unit is proposed in order to provide an added measure of protection a pre-treatment of stormwater before being discharged from the subject site. The Stormceptor EFO8 model will treat the post development-controlled flows with a TSS removal rate of 81% as per the Canadian ETV sizing criteria. The design criteria and background information on how the Stormceptor unit is sized is provided within Appendix C. Refer to Servicing Plan C5.0 and Detail Plan C7.1 for stormwater quality control measures.

5. Erosion and Sediment Control

To ensure Stormwater runoff quality is controlled during construction, an erosion and sediment control strategy will be implemented to mitigate transportation of silt off-site to the existing roads and sewers. It is imperative that effective controls be put in place and maintained until all areas are stabilized with surface cover.

All erosion and sediment control Best Management Practices (BMP) shall be designed, constructed and maintained in accordance with the RVCA's erosion control requirements.

Items that will be addressed for both temporary and permanent erosion and sediment controls are based on the following:

- Site location description and area;
- Existing and proposed land use;
- Vegetative cover;
- Existing drainage routes;
- Proposed site works;
- Proposed outlets;
- Permits required;
- Sediment filters and barriers - silt fences;
- Construction entrance location;
- Protection to catch basins and ditch inlets;

To prevent construction generated sediments from entering the storm sewers or leaving the site by overland flow, the following measures should be implemented during the construction phase:

- Temporary sediment control fencing should be erected around the perimeter of the grading activities.
- Temporary sediment fabric and stone filters should be installed on existing and proposed catch basins until surface cover has been stabilized.
- A temporary construction access mud mat should be implemented to reduce the amount of materials that may be transported off site.
- Construction during drier months should be monitored for wind-borne transport of sediments. At the direction of the engineer, the contractor may be directed to water down exposed earth areas with an aqueous solution of calcium chloride.
- All disturbed areas not under immediate construction for 30 days, or not intended for building activities within a 3-month time period, should be stabilized with seeding.

Built up sediment should be removed and disposed off-site at least once a month, or more frequently as directed by the engineer. Details have been provided on drawing C6.0.

6. Conclusions and Recommendations

Municipal services for water and sanitary are available to service the proposed development. Stormwater management services will be facilitated through the use of on-site management facilities. In summary:

- The proposed development will be serviced for potable water and fire protection by connections to the existing Watermain along Lancaster Road.
- The proposed development will be serviced for sanitary sewerage by connection to the existing Sanitary Trunk Sewer along Lancaster Road.
- Storm drainage for all storms events (2-year to 100-year) will be controlled to the allowable pre-development 5-year storm event.
- Storm drainage for all storm events (2-year to 100-year) are controlled using underground storage systems (Greenstorm) in addition to pipe/manhole structures and rooftop storage.
- Stormwater quality control has been achieved on site to meet MECP Enhanced Level 1 protection.
- Erosion and sediment control practices have been designed to mitigate sediment in surface runoff.

In summary, the proposed development can be serviced by the existing municipal infrastructure along Lancaster Road with the addition of on-site stormwater management systems to be implemented in order to satisfy the City of Ottawa design criteria, improve on existing conditions and in keeping with good engineering practice. Accordingly, Ware Malcomb recommends the adoption of this report for the purposes of Site Plan Approval as it relates to the provision of servicing and stormwater management works.

Prepared by,

Ware Malcomb Inc.

Noam Itzkovsky, P.Eng.
Civil Engineering Manager

Appendix A – Sanitary Calculations

WARE MALCOMB
architecture | planning | interiors
graphics | civil engineering

Date: September 6, 2023
Revision No.:
Project No.: OTW21-0002
Designed By: N.I.
Checked By: D.N.

Proposed Industrial Building
2760-2770 Sheffield Road
Ottawa, ON K1B 3V8

Table 1 - Existing Sanitary Demand Calculations

n = 0.013
M = 1 + (14 / (4 + (P / 1000) ^ 0.5)) 2 <= "M" <= 4
Qp = P * Q * M / 86400 Q = 350 L/cap/day

Qtot = Qp + Qi

ASSUMPTIONS

DESCRIPTION	DENSITY	FLOW RATE	PEAKING FACTOR
Single Family	3.40 people/unit	350 L/cap/d	M
Townhomes	2.70 people/unit	350 L/cap/d	M
Condominium Building	1.80 people/unit	350 L/cap/d	M
Commercial/Institutional		50000 L/ha/d	1.5
Light Industrial		35000 L/ha/d	1.5
Heavy Industrial		55000 L/ha/d	1.5

Peak Extraneous Flow 0.28 L/s/ha

	BUILDINGS	DEVELOPMENT AREA (Ha)	TOTAL UNITS	POPULATION (P)	POPULATION (ACC.)	EXTRANEOUS FLOW (L/s)	PEAKING FACTOR (M)	AVERAGE FLOW (L/s)	PEAK FLOW (L/s)
Light Industrial (Lancaster)	1	0.48	0	0	0	0.13	1.50	0.19	0.43
Light Industrial (Sheffield)	4	5.72	0	0	0	1.60	1.50	2.32	5.08
TOTAL	**5**	**6.2**	**0**	**0**	**0**	**1.74**	**1.50**	**2.51**	**5.50**

Table 2 - Proposed Sanitary Demand Calculations

n = 0.013
M = 1 + (14 / (4 + (P / 1000) ^ 0.5)) 2 <= "M" <= 4
Qp = P * Q * M / 86400 Q = 350 L/cap/day

Qtot = Qp + Qi

ASSUMPTIONS

DESCRIPTION	DENSITY	FLOW RATE	PEAKING FACTOR
Single Family	3.40 people/unit	350 L/cap/d	M
Townhomes	2.70 people/unit	350 L/cap/d	M
Condominium Building	1.80 people/unit	350 L/cap/d	M
Commercial/Institutional		50000 L/ha/d	1.5
Light Industrial		35000 L/ha/d	1.5
Heavy Industrial		55000 L/ha/d	1.5

Peak Extraneous Flow 0.28 L/s/ha

	BUILDINGS	DEVELOPMENT AREA (Ha)	TOTAL UNITS	POPULATION (P)	POPULATION (ACC.)	EXTRANEOUS FLOW (L/s)	PEAKING FACTOR (M)	AVERAGE FLOW (L/s)	PEAK FLOW (L/s)
Light Industrial (Lancaster)	2	2.73	0	0	0	0.76	1.50	1.11	2.42
Light Industrial (Sheffield)	4	5.72	0	0	0	1.60	1.50	2.32	5.08
TOTAL	**6**	**8.45**	**0**	**0**	**0**	**2.37**	**1.50**	3.42	**7.50**

WARE MALCOMB
architecture | planning | interiors
graphics | civil engineering

Date: September 6, 2023
Revision No.:
Project No.: OTW21-0002
Designed By: N.I.
Checked By: D.N.

Proposed Industrial Building
2760-2770 Sheffield Road
Ottawa, ON K1B 3V8

Table 3 - Sanitary Sewer Capacity Calculations

n=0.013
M=1+(14/(4+(P/1000)^0.5)) M=1.5
Qp=P*Q*M/86400
Qi= 0.28 L/s/ha

Qtot=Qp+Qi

STREETS	AREA ID	MANHOLE		Qp	Area	Area	Qi	TOTAL	Length	D	S	Q	V	V	% FULL
						(ACC.)		Q				FULL	FULL		
		FROM	TO	(l/s)	(ha)	(ha)	(l/s)	(l/s)	(m)	(mm)	(%)	(l/s)	(m/s)	(m/s)	
Lancaster Road	P-9	BUILDING	SAN MH 2	1.11	2.73	2.73	0.76	2.42	18.66	200	0.33	18.93	0.60	1.57	12.8%
	P-1	SAN MH 2	SAN MH 1	1.11	2.73	2.73	0.76	2.42	79.88	200	0.33	18.93	0.60	1.57	12.8%
	/	SAN MH 1	SAN-DOGHOUSE MH 1	1.11	2.73	2.73	0.76	2.42	12.95	200	0.33	18.93	0.60	1.57	12.8%

Appendix B – Water Calculations

WARE MALCOMB
architecture | planning | interiors
graphics | civil engineering

Date: September 6, 2023
Revision No.:
Project No.: OTW21-0002
Designed By: N.I.
Checked By: D.N.

Proposed Industrial Building
2760-2770 Sheffield Road
Ottawa, ON K1B 3V8

Table 1 - Existing Water Demand Calculations

ASSUMPTIONS

DESCRIPTION	DENSITY	FLOW RATE
Single Family	3.40 people/unit	350 L/cap/d
Townhomes	2.70 people/unit	350 L/cap/d
Condominium Building	1.80 people/unit	350 L/cap/d
Commercial/Institutional		50000 L/ha/d
Light Industrial		35000 L/ha/d
Heavy Industrial		55000 L/ha/d

PEAKING FACTORS*

MAX DAY FACTOR	1.50
PEAK RATE FACTOR	2.70

*From MOE Manual Table 3-3 - Population of Fewer than 500

PHASE	BUILDINGS	UNITS	TOTAL UNITS	POPULATION (P)	INDUSTRIAL AREA (ha)	INDUSTRIAL EQUIVALENT POPULATION	EQUIVALENT POPULATION	AVERAGE FLOW (L/s)	MAX DAY FLOW (L/s)	MAX HOUR (L/s)
Light Industrial (Lancaster)	1	0	0	0	0.48	0	0	0.19	0.29	0.53
Light Industrial (Sheffield)	4	0	0	0	5.72	0	0	2.32	3.48	6.26
TOTAL UNITS	**5**	**0**	**0**	**0**	**6.20**	**0**	**0**	**2.51**	**3.77**	**6.78**

Table 2 - Proposed Water Demand Calculations

ASSUMPTIONS

DESCRIPTION	DENSITY	FLOW RATE
Single Family	3.40 people/unit	350 L/cap/d
Townhomes	2.70 people/unit	350 L/cap/d
Condominium Building	1.80 people/unit	350 L/cap/d
Commercial/Institutional		50000 L/ha/d
Light Industrial		35000 L/ha/d
Heavy Industrial		55000 L/ha/d

PEAKING FACTORS*

MAX DAY FACTOR	1.50
PEAK RATE FACTOR	2.70

*From MOE Manual Table 3-3 - Population of Fewer than 500

PHASE	BUILDINGS	UNITS	TOTAL UNITS	POPULATION (P)	INDUSTRIAL AREA (ha)	INDUSTRIAL EQUIVALENT POPULATION	EQUIVALENT POPULATION	AVERAGE FLOW (L/s)	MAX DAY FLOW (L/s)	MAX HOUR (L/s)
Light Industrial (Lancaster)	2	0	0	0	2.73	0	0	1.11	1.66	2.99
Light Industrial (Sheffield)	4	0	0	0	5.72	0	0	2.32	3.48	6.26
TOTAL UNITS	**6**	**0**	**0**	**0**	**8.45**	**0**	**0**	**3.42**	**5.13**	**9.24**

WARE MALCOMB
architecture | planning | interiors
graphics | civil engineering

Date: September 6, 2023
Revision No.:
Project No.: OTW21-0002
Designed By: N.I.
Checked By: D.N.

Proposed Industrial Building
2760-2770 Sheffield Road
Ottawa, ON K1B 3V8

Table 3 - Boundary Conditions (HGL) Calculations

Elevation of Water Meter:	68.4 m ASL		
Finish Floor Elevation:	67.5 m ASL		
		Static Pressure at Water Meter	
Minimum HGL:	109.8 m ASL	58.9047575 psi	406.134 kPa
Maximum HGL:	118 m ASL	70.57188338 psi	486.576 kPa
Max Day + FF (150 L/s):	102.7 m ASL	48.80273387 psi	336.483 kPa
Elevation of Nozzle:	67.91 m ASL		
Elevation of Fire Hydrant #1	67.1 m ASL		
		Static Pressure at Hydrant #1	
Minimum HGL:	109.8 m ASL	59.60193941 psi	410.9409 kPa
Maximum HGL:	118 m ASL	71.26906529 psi	491.3829 kPa
Max Day + FF (150 L/s):	102.7 m ASL	49.49991578 psi	341.2899 kPa
Elevation of Nozzle:	68.17 m ASL		
Elevation of Fire Hydrant #2	67.36 m ASL		
		Static Pressure at Hydrant #2	
Minimum HGL:	109.8 m ASL	59.23200615 psi	408.3903 kPa
Maximum HGL:	118 m ASL	70.89913203 psi	488.8323 kPa
Max Day + FF (150 L/s):	102.7 m ASL	49.12998252 psi	338.7393 kPa

Boundary Conditions for 2760 Sheffield Road

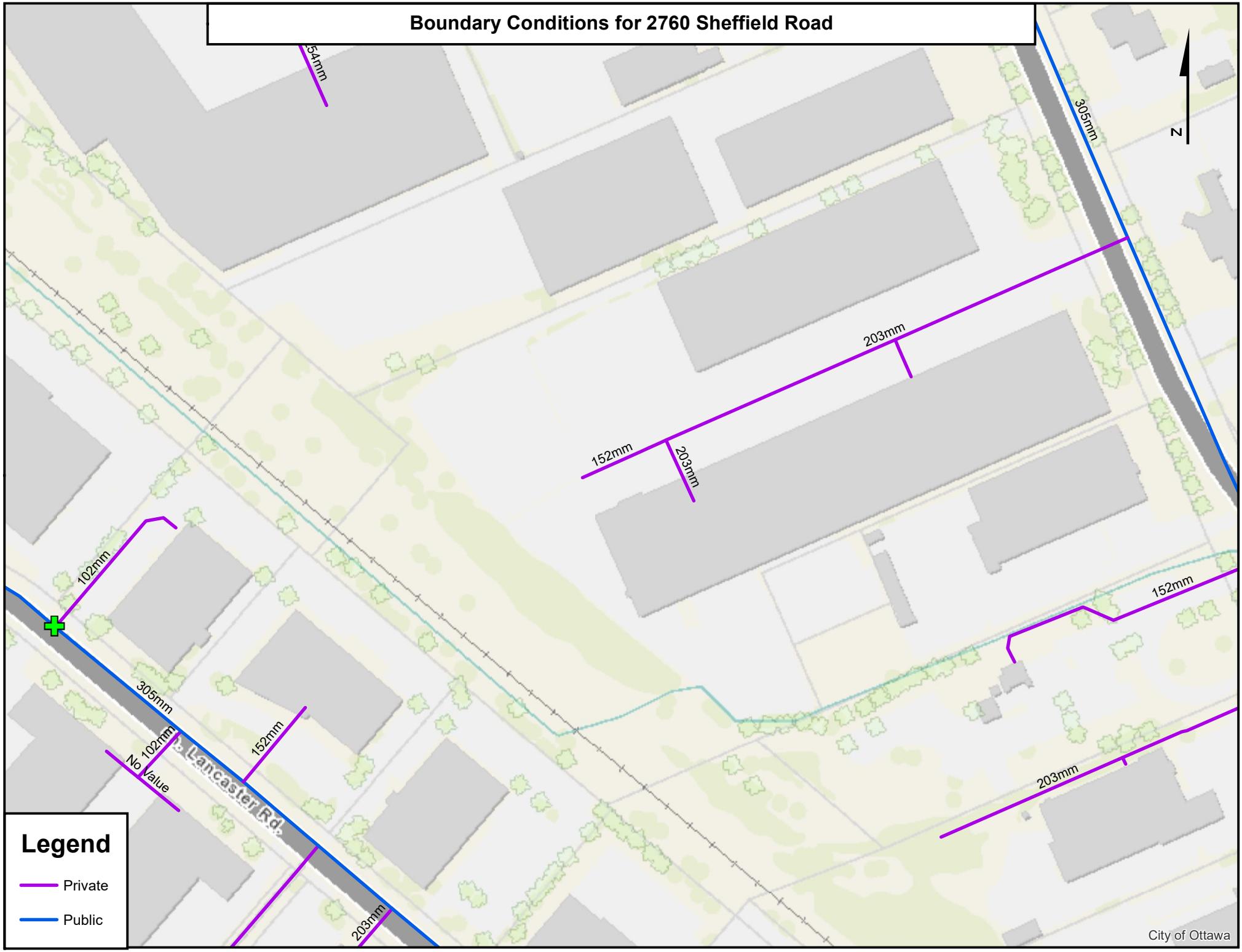

Noam Itzkovsky

From: Bramah, Bruce <bruce.bramah@ottawa.ca>
Sent: Friday, February 10, 2023 9:59 AM
To: Noam Itzkovsky
Subject: RE: OTW21-0002 - 2760 Sheffield Road
Attachments: 2760 Sheffield Road January 2023.pdf

CAUTION: External Email Alert!

Good morning Noam,

The recently passed bill 23 reduced the conservation authority's area of review, so quality control will only be required to meet 80% TSS removal.

The following are boundary conditions, HGL, for hydraulic analysis at 2760 Sheffield Road (zone 1E) assumed to be a connected to the 305 mm watermain on Lancaster Road (see attached PDF for location).

All Connections:

Minimum HGL: 109.8 m

Maximum HGL: 118.0 m

Max Day + FF (150 L/s): 102.7 m

These are for current conditions and are based on computer model simulation.

Disclaimer: The boundary condition information is based on current operation of the city water distribution system. The computer model simulation is based on the best information available at the time. The operation of the water distribution system can change on a regular basis, resulting in a variation in boundary conditions. The physical properties of watermains deteriorate over time, as such must be assumed in the absence of actual field test data. The variation in physical watermain properties can therefore alter the results of the computer model simulation.

Thank you,
--
Bruce Bramah, EIT
Project Manager
Planning, Real Estate and Economic Development Department / Direction générale de la planification, des biens immobiliers et du développement économique
Development Review - South Branch
City of Ottawa | Ville d'Ottawa
110 Laurier Avenue West Ottawa, ON | 110, avenue. Laurier Ouest. Ottawa (Ontario) K1P 1J1
613.580.2424 ext./poste 29686, Bruce.Bramah@ottawa.ca

From: Noam Itzkovsky <nitzkovsky@waremalcomb.com>
Sent: January 26, 2023 12:58 PM
To: Bramah, Bruce <bruce.bramah@ottawa.ca>
Subject: RE: OTW21-0002 - 2760 Sheffield Road

CAUTION: This email originated from an External Sender. Please do not click links or open attachments unless you recognize the source.

ATTENTION : Ce courriel provient d'un expéditeur externe. Ne cliquez sur aucun lien et n'ouvrez pas de pièce jointe, excepté si vous connaissez l'expéditeur.

Hi Bruce,

Please see location of services. Please note that the valve boxes will shifted to the property line. Disregard the current location. Let me know if you have any questions.

Thank you,

Noam Itzkovsky, P.Eng.
Civil Project Manager
nitzkovsky@waremalcomb.com
M 416-890-6229
P 905.760.1221 x 2106

WARE MALCOMB
ARCHITECTURE | CIVIL ENGINEERING
PLANNING | BRANDING
INTERIORS | BUILDING MEASUREMENT

From: Bramah, Bruce <bruce.bramah@ottawa.ca>
Sent: Wednesday, January 25, 2023 1:36 PM
To: Noam Itzkovsky <nitzkovsky@waremalcomb.com>
Subject: RE: OTW21-0002 - 2760 Sheffield Road

CAUTION: External Email Alert!

Hi Noam,

Please provide a clear location for the proposed water connection with either a servicing plan or a Geo Ottawa image of the proposed connection location.
Thank you,
--
Bruce Bramah, EIT
Project Manager
Planning, Real Estate and Economic Development Department / Direction générale de la planification, des biens immobiliers et du développement économique
Development Review - South Branch
City of Ottawa | Ville d'Ottawa
110 Laurier Avenue West Ottawa, ON | 110, avenue. Laurier Ouest. Ottawa (Ontario) K1P 1J1
613.580.2424 ext./poste 29686, Bruce.Bramah@ottawa.ca

From: Noam Itzkovsky <nitzkovsky@waremalcomb.com>
Sent: January 25, 2023 1:09 PM
To: Bramah, Bruce <bruce.bramah@ottawa.ca>
Subject: RE: OTW21-0002 - 2760 Sheffield Road

CAUTION: This email originated from an External Sender. Please do not click links or open attachments unless you recognize the source.

ATTENTION : Ce courriel provient d'un expéditeur externe. Ne cliquez sur aucun lien et n'ouvrez pas de pièce jointe, excepté si vous connaissez l'expéditeur.

Hi Bruce,

Can we please expedite the request for boundary conditions based on the following information:

1. The location of services will connect to the existing 300mm diameter watermain along Lancaster Road.
2. Type II Non-Combustible 1-Storey Development – Fire Flow Required: 9,008 L/min (As per FUS, 2020).
3. Average Daily Demand: 1.11 L/sec
4. Maximum Day Demand: 1.66 L/sec
5. Maximum Hourly Daily Demand: 2.99 L/sec

Let me know if you require anything else.

Thank you,

Noam Itzkovsky, P.Eng.
Civil Project Manager
nitzkovsky@waremalcomb.com
M 416-890-6229
P 905.760.1221 x 2106

WARE MALCOMB
ARCHITECTURE | CIVIL ENGINEERING
PLANNING | BRANDING
INTERIORS | BUILDING MEASUREMENT

From: Bramah, Bruce <bruce.bramah@ottawa.ca>
Sent: Tuesday, January 24, 2023 8:28 AM
To: Noam Itzkovsky <nitzkovsky@waremalcomb.com>
Subject: RE: OTW21-0002 - 2760 Sheffield Road

CAUTION: External Email Alert!

Good morning Noam,

In summary of our discussion yesterday, if the existing SWM report for 2713 Lancaster is not available, the runoff coefficient for the existing developed parcel shall be the lesser of the existing conditions to a maximum of 0.5.

If you have any further questions prior to your submission, please feel free to email me. Please note, boundary condition return times are currently 3-4 weeks.
Regards,
--
Bruce Bramah, EIT
Project Manager
Planning, Real Estate and Economic Development Department / Direction générale de la planification, des biens immobiliers et du développement économique
Development Review - South Branch
City of Ottawa | Ville d'Ottawa
110 Laurier Avenue West Ottawa, ON | 110, avenue. Laurier Ouest. Ottawa (Ontario) K1P 1J1
613.580.2424 ext./poste 29686, Bruce.Bramah@ottawa.ca

From: Noam Itzkovsky <nitzkovsky@waremalcomb.com>
Sent: January 23, 2023 3:34 PM
To: Bramah, Bruce <bruce.bramah@ottawa.ca>

WARE MALCOMB
architecture | planning | interiors
graphics | civil engineering

Date: September 6, 2023
Revision No.:
Project No.: OTW21-0002
Designed By: N.I.
Checked By: D.N.

Proposed Industrial Building
2760-2770 Sheffield Road
Ottawa, ON K1B 3V8

Table 4 - FUS Demand Calculations

1 FUS Formula

$$F = 220\, C\, \sqrt{A}$$

where: F = required fire flow in litres per minute
C= the Coefficient related to the type of construction; and
A = the total flow area in square metres (including all storeys but excluding basements at least 50% below grade)

Type of Construction: non-combustible construction
Building = Large Single Storey Space
Building is being used for high piled stock, or for rack storage

C =	0.8	
A =	15716.1285	
F =	22064	L/min
	368	L/s

Building Height = 12m = 4 storeys (3m per Storey), therefore Total Effective Area shall be Single Largest Floor Area plus 25% of each of the two immediately adjoining floors.

2 Occupancy Adjustment

Type of Occupancy	combustible		
Hazard Allowance	no change		
Adjusted Fire Flow		22064	L/min

3 Sprinkler Adjustment

		CREDIT	
NFPA 13 sprinkler standard	Yes	30%	
Standard water supply	Yes	10%	
Fully Supervised system	Yes	10%	
Sprinkler Credit		11032	L/min

4 Exposure Adjustment

		Charge	
North Side	>30m	0%	
East Side	>30m	0%	
South Side	>30m	0%	
West Side	>30m	0%	
Exposures Surcharge		0	L/min

Total Required Fire Flow	11032	L/min
	183.9	L/sec

Appendix C – Storm Calculations

WARE MALCOMB
architecture | planning | interiors
graphics | civil engineering

Date: ################
Revision No.:
Project No.: OTW21-0002
Designed By: N.I.
Checked By: D.N.

Proposed Industrial Building
2760-2770 Sheffield Road
Ottawa, ON K1B 3V8

Table 1 - Storm Sewer Capacity Calculations

Q= 0.0028*C*I*A (cms)
C=RUNOFF COEFFICIENT
I-RAINFALL INTENSITY= 998.1/(10+6.053)^0.814) - 1:5 year STM
A=AREA (ha)

	A	B	C
5-Year	998.1	0.814	6.053

Areas	MANHOLE		LENGTH	INCREMENT			TOTAL	FLOW TIME (min)		I	TOTAL	S	D	Available	Q	V	Percentage
	FROM	TO	(m)	C	A	CA	CA	TO	IN	(mm/h)	Q (cms)	(%)	(mm)	Capacity (cms)	FULL (cms)	FULL (m/s)	of Capacity (%)
P-7	STM CBMH 4	STM MH 3	36.0	0.86	0.21	0.18	0.18	10.00	0.66	104.19	0.05	0.33	375	0.05	0.10	0.91	52%
P-5	STM CBMH 2	STM CBMH 3	45.7	0.77	0.30	0.23	0.23	10.00	0.85	104.19	0.07	0.25	450	0.08	0.14	0.90	47%
P-6	STM CBMH 3	STM MH 3	42.0	0.80	0.26	0.21	0.44	10.85	0.79	99.91	0.12	0.20	525	0.07	0.19	0.89	63%
\	STM MH 3	UNDERGROUND STORAGE	1.7	0.00	0.00	0.00	0.62	11.64	0.03	96.27	0.17	0.20	600	0.11	0.27	0.97	60%
\	UNDERGROUND STORAGE	STM CBMH 10	7.4	0.00	0.00	0.00	0.62	11.67	0.13	96.14	0.17	0.20	600	0.11	0.27	0.97	60%
P-25	STM CB 1	STM CBMH 9	36.5	0.77	0.17	0.13	0.13	10.00	0.77	104.19	0.04	0.25	375	0.05	0.09	0.79	43%
P-15	STM CBMH 9	STM CBMH 8	47.0	0.77	0.18	0.14	0.27	10.77	0.98	100.31	0.08	0.20	450	0.05	0.13	0.80	59%
P-12	STM CBMH 8	STM MH 4	31.9	0.71	0.16	0.12	0.38	11.74	0.60	95.81	0.10	0.20	525	0.09	0.19	0.89	53%
\	STM MH 4	STM CBMH 7	25.4	0.00	0.00	0.00	0.38	12.34	0.44	93.26	0.10	0.20	600	0.18	0.27	0.97	36%
P-11	STM CBMH 7	STM CBMH 6	51.1	0.76	0.09	0.07	0.45	12.78	0.88	91.51	0.12	0.20	600	0.16	0.27	0.97	42%
P-10	STM CBMH 6	STM CBMH 5	80.4	0.78	0.15	0.12	0.57	13.65	1.35	88.18	0.14	0.21	600	0.14	0.28	1.00	50%
P-9	STM CBMH 5	UNDERGROUND STORAGE	1.9	0.84	0.21	0.18	0.75	13.65	0.02	88.18	0.18	0.39	600	0.20	0.38	1.36	48%
\	UNDERGROUND STORAGE	STM CBMH 10	4.8	0.00	0.00	0.00	0.75	13.68	0.08	88.09	0.18	0.21	600	0.10	0.28	1.00	65%
P-13				0.95	0.44	0.42											
P-14				0.95	0.52	0.49											
\	BUILDING (TRENCH DRAINS)	STM CBMH 10	12.4	0.00	0.00	0.91	0.91	10.00	0.07	104.19	0.26	2.80	450	0.21	0.48	3.00	55%
										100-Year +20%	**0.13**						
\	STM CBMH 10	OGS	6.2	0.00	0.00	0.00	2.28	13.76	0.13	87.80	0.13	0.10	750	0.22	0.35	0.80	37%
\	OGS	STM CBMH 1	15.3	0.00	0.00	0.00	2.28	13.89	0.32	87.34	0.13	0.10	750	0.22	0.35	0.80	37%
										100-Year +20%	0.02						
P-8	BUILDING (ROOFTOP)	STM MH 2	33.8	0.95	1.06	1.01	1.01	10.00	0.32	104.19	0.02	1.66	300	0.10	0.12	1.76	18%
\	STM MH 2	STM CBMH 1	2.0	0.00	0.00	0.00	1.01	10.32	0.03	102.53	0.02	0.50	300	0.05	0.07	0.97	33%
P-3	STM CBMH 1	STM MH 1	64.6	0.80	0.21	0.17	3.28	14.21	1.35	86.21	0.15	0.10	750	0.20	0.35	0.80	43%
\	STM MH 1	STM DOGHOUSE MH 1	14.7	0.00	0.00	0.00	3.28	15.56	0.31	81.80	0.15	0.10	750	0.20	0.35	0.80	43%

WARE MALCOMB
architecture | planning | interiors
graphics | civil engineering

Date: ###############
Revision No.:
Project No.: OTW21-0002
Designed By: N.I.
Checked By: D.N.

Proposed Industrial Building
2760-2770 Sheffield Road
Ottawa, ON K1B 3V8

Table 2 - Weighted Runoff Coefficient Calculations

Area ID	Total Area (m^2)	0.40 Undeveloped Lands (m^2)	0.95 Asphalt Drive (m^2)	0.95 Building Roof (m^2)	0.75 Interlocking (m^2)	0.60 Gravel (m^2)	0.95 Concrete (m^2)	Weighted Rational Coefficient
Pre-Development	84454	28813	16841	21723	0	17077	0	0.69
X-1	1504	0	0	1504	0	0	0	0.95
X-2	863	336	527	0	0	0	0	0.74
X-3	2115	562	1553	0	0	0	0	0.80
X-4	346	346	0	0	0	0	0	0.40
X-5	9263	2288	1410	0	0	5565	0	0.60
X-6	13200	0	8818	0	0	4382	0	0.83
X-7	4718	646	535	0	0	3537	0	0.61
X-8	3301	763	0	0	0	2538	0	0.55
X-9	3360	0	0	3360	0	0	0	0.95
X-10	4876	0	0	4876	0	0	0	0.95
X-11	9201	0	0	9201	0	0	0	0.95
X-12	2782	0	0	2782	0	0	0	0.95
X-13	2861	0	2861	0	0	0	0	0.95
X-14	4190	3053	1137	0	0	0	0	0.55
X-15	21874	20819	0	0	0	1055	0	0.41
Post-Development	84454	25941	25194	27663	0	0	5656	0.78
P-1	1504	0	0	1504	0	0	0	0.95
P-2	863	336	527	0	0	0	0	0.74
P-3	2115	562	1553	0	0	0	0	0.80
P-4	346	346	0	0	0	0	0	0.40
P-5	3039	992	2047	0	0	0	0	0.77
P-6	2588	699	1889	0	0	0	0	0.80
P-7	2151	501	1322	0	0	0	328	0.82
P-8	10563	0	0	10563	0	0	0	0.95
P-9	1316	344	820	0	0	0	152	0.81
P-10	1472	468	847	0	0	0	157	0.78
P-11	913	322	489	0	0	0	102	0.76
P-12	1605	692	748	0	0	0	165	0.71
P-13	4439	307	2129	0	0	0	2003	0.91
P-14	5217	0	2542	0	0	0	2675	0.95
P-15	1774	612	1088	0	0	0	74	0.76
P-16	4319	281	1420	0	0	2618	0	0.70
P-17	3379	0	0	3379	0	0	0	0.95
P-18	3305	767	0	0	0	2538	0	0.55
P-19	4886	0	0	4886	0	0	0	0.95
P-20	8887	0	7773	0	0	1114	0	0.91
P-21	7331	0	0	7331	0	0	0	0.95
P-22	2871	0	2871	0	0	0	0	0.95
P-23	2792	0	0	2792	0	0	0	0.95
P-24	4215	3046	1169	0	0	0	0	0.55
P-25	1745	583	1088	0	0	0	74	0.77
P-26	819	105	619	0	0	0	95	0.88
Lancaster Road (X-1 - X-4 and X-15)	26702	22063	2080	1504	0	1055	0	0.48
Sheffield Road (X-5 - X-14)	57752	6750	14761	20219	0	16022	0	0.79
Lancaster Road (P-1 to P-15 and P-25 to P-26)	42469	6869	17708	12067	0	0	5825	0.86
Sheffield (P-16 to P-24)	41985	4094	13233	18388	0	6270	0	0.84
Lancaster Controlled (P-5 to P-7, P-9 to P-15 and P-25 to P-26)	27078	5625	15628	0	0	0	5825	0.84
Lancaster Controlled (P-8)	10563	0	0	10563	0	0	0	0.95
Lancaster Uncontrolled (P-1 to P-4)	4828	1244	2080	1504	0	0	0	0.81

WARE MALCOMB
architecture | planning | interiors
graphics | civil engineering

Date: ###############
Revision No.:
Project No.: OTW21-0002
Designed By: N.I.
Checked By: D.N.

Proposed Industrial Building
2760-2770 Sheffield Road
Ottawa, ON K1B 3V8

Table 3 - Pre-Development Runoff Calculation

Lancaster - X-1 to X-4 and X-15

Area	2.67	ha	
Runoff Coefficient	0.48		
Time of Concentration	10	min	
	Interpolated		
Return Rate	2	year	
Coefficient	1		
Rainfall Intesity	76.8	mm/hr	
Allowable Release Rate	0.27	m^3/s	274.43 L/s
Return Rate	5	year	
Coefficient	1		
Rainfall Intesity	104.2	mm/hr	
Allowable Release Rate	0.37	m^3/s	372.28 L/s
Return Rate	10	year	
Coefficient	1		
Rainfall Intesity	122.1	mm/hr	
Allowable Release Rate	0.44	m^3/s	436.42 L/s
Return Rate	25	year	
Coefficient	1.1		
Rainfall Intesity	144.7	mm/hr	
Allowable Release Rate	0.57	m^3/s	568.69 L/s
Return Rate	50	year	
Coefficient	1.2		
Rainfall Intesity	161.5	mm/hr	
Allowable Release Rate	0.69	m^3/s	692.33 L/s
Return Rate	100	year	
Coefficient	1.25		
Rainfall Intesity	178.6	mm/hr	
Allowable Release Rate	0.80	m^3/s	797.49 L/s

Sheffield - X-5 to X-14

Area	5.78	ha	
Runoff Coefficient	0.79		
Time of Concentration	10	min	
	Interpolated		
Return Rate	2	year	
Coefficient	1		
Rainfall Intesity	76.8	mm/hr	
Allowable Release Rate	0.97	m^3/s	971.67 L/s
Return Rate	5	year	
Coefficient	1		
Rainfall Intesity	104.2	mm/hr	
Allowable Release Rate	1.32	m^3/s	1318.16 L/s
Return Rate	10	year	
Coefficient	1		
Rainfall Intesity	122.1	mm/hr	
Allowable Release Rate	1.55	m^3/s	1545.24 L/s
Return Rate	25	year	
Coefficient	1.1		
Rainfall Intesity	144.7	mm/hr	
Allowable Release Rate	2.01	m^3/s	2013.59 L/s
Return Rate	50	year	
Coefficient	1.2		
Rainfall Intesity	161.5	mm/hr	
Allowable Release Rate	2.45	m^3/s	2451.35 L/s
Return Rate	100	year	
Coefficient	1.25		
Rainfall Intesity	178.6	mm/hr	
Allowable Release Rate	2.82	m^3/s	2823.72 L/s

Storm (yrs)	Coeff A	Coeff B	Coeff C
2	733.0	0.81	6.199
5	998.1	0.814	6.053
10	1174.2	0.816	6.014
25	1402.9	0.819	6.018
50	1569.6	0.82	6.014
100	1735.7	0.82	6.014

Equation of Curve

$$I = A * (T) ^{c}$$

Where:

I = Storm Intensity (mm/hr)
A = Coefficient (A)
C = Exponent (C)
T = Time of Concentration (Hours)

Modified Rational Method

$$Q = (C_i * C * I * A) / 360$$

Where:

Q = Flow Rate (m3/s)
Ci = Peaking Coefficient
C = Rational Method Runoff Coefficient
I = Storm Intensity (mm/hr)
A = Area (ha.)

WARE MALCOMB
architecture | planning | interiors
graphics | civil engineering

Date: ###############
Revision No.:
Project No.: OTW21-0002
Designed By: N.I.
Checked By: D.N.

Proposed Industrial Building
2760-2770 Sheffield Road
Ottawa, ON K1B 3V8

Table 4 - Post-Development Runoff Calculation

Lancaster - P-1 to P-15 and P-25 and P-26

Area	4.25	ha	
Runoff Coefficient	0.86		
Time of Concentration	10	min	
	Interpolated		
Return Rate	2	year	
Coefficient	1		
Rainfall Intesity	76.8	mm/hr	
Allowable Release Rate	0.78	m^3/s	780.16 L/s
Return Rate	5	year	
Coefficient	1		
Rainfall Intesity	104.2	mm/hr	
Allowable Release Rate	1.06	m^3/s	1058.36 L/s
Return Rate	10	year	
Coefficient	1		
Rainfall Intesity	122.1	mm/hr	
Allowable Release Rate	1.24	m^3/s	1240.68 L/s
Return Rate	25	year	
Coefficient	1.1		
Rainfall Intesity	144.7	mm/hr	
Allowable Release Rate	1.62	m^3/s	1616.72 L/s
Return Rate	50	year	
Coefficient	1.2		
Rainfall Intesity	161.5	mm/hr	
Allowable Release Rate	1.97	m^3/s	1968.20 L/s
Return Rate	100	year	
Coefficient	1.25		
Rainfall Intesity	178.6	mm/hr	
Allowable Release Rate	2.27	m^3/s	2267.18 L/s

Sheffield - P-16 to P-24

Area	4.20	ha	
Runoff Coefficient	0.84		
Time of Concentration	10	min	
	Interpolated		
Return Rate	2	year	
Coefficient	1		
Rainfall Intesity	76.8	mm/hr	
Allowable Release Rate	0.76	m^3/s	756.09 L/s
Return Rate	5	year	
Coefficient	1		
Rainfall Intesity	104.2	mm/hr	
Allowable Release Rate	1.03	m^3/s	1025.71 L/s
Return Rate	10	year	
Coefficient	1		
Rainfall Intesity	122.1	mm/hr	
Allowable Release Rate	1.20	m^3/s	1202.41 L/s
Return Rate	25	year	
Coefficient	1.1		
Rainfall Intesity	144.7	mm/hr	
Allowable Release Rate	1.57	m^3/s	1566.85 L/s
Return Rate	50	year	
Coefficient	1.2		
Rainfall Intesity	161.5	mm/hr	
Allowable Release Rate	1.91	m^3/s	1907.49 L/s
Return Rate	100	year	
Coefficient	1.25		
Rainfall Intesity	178.6	mm/hr	
Allowable Release Rate	2.20	m^3/s	2197.24 L/s

Storm (yrs)	Coeff A	Coeff B	Coeff C
2	733.0	0.81	6.199
5	998.1	0.814	6.053
10	1174.2	0.816	6.014
25	1402.9	0.819	6.018
50	1569.6	0.82	6.014
100	1735.7	0.82	6.014

Equation of Curve

$$I = A * (T) ^{C}$$

Where:

I = Storm Intensity (mm/hr)
A = Coefficient (A)
C = Exponent (C)
T = Time of Concentration (Hours)

Modified Rational Method

$$Q = (C_i * C * I * A) / 360$$

Where:

Q = Flow Rate (m3/s)
Ci = Peaking Coefficient
C = Rational Method Runoff Coefficient
I = Storm Intensity (mm/hr)
A = Area (ha.)

WARE MALCOMB
architecture | planning | interiors
graphics | civil engineering

Date: September 6, 2023
Revision No.:
Project No.: OTW21-0002
Designed By: N.I.
Checked By: D.N.

Proposed Industrial Building
2760-2770 Sheffield Road
Ottawa, ON K1B 3V8

Table 5 - Post-Development (Sub-Catchments) Runoff Calculation

Controlled Pavement (P-5 to P-7, P-9 to P-15 and P-25 to P-26) - STM CBMH 10

Area	2.71	ha	
Runoff Coefficient	0.84		
Time of Concentration	10	min	
	Interpolated		
Return Rate	2	year	
Coefficient	1		
Rainfall Intesity	76.8	mm/hr	
Allowable Release Rate	0.48	m^3/s	482.81 L/s
Return Rate	5	year	
Coefficient	1		
Rainfall Intesity	104.2	mm/hr	
Allowable Release Rate	0.65	m^3/s	654.98 L/s
Return Rate	10	year	
Coefficient	1		
Rainfall Intesity	122.1	mm/hr	
Allowable Release Rate	0.77	m^3/s	767.81 L/s
Return Rate	25	year	
Coefficient	1.1		
Rainfall Intesity	144.7	mm/hr	
Allowable Release Rate	1.00	m^3/s	1000.53 L/s
Return Rate	50	year	
Coefficient	1.2		
Rainfall Intesity	161.5	mm/hr	
Allowable Release Rate	1.22	m^3/s	1218.05 L/s
Return Rate	100	year	
Coefficient	1.25		
Rainfall Intesity	178.6	mm/hr	
Allowable Release Rate	1.40	m^3/s	1403.07 L/s
Return Rate	100	year	+ 20%
Coefficient	1.25		
Rainfall Intesity	214.3	mm/hr	
Allowable Release Rate	1.68	m^3/s	1683.69 L/s

Controlled Rooftop (P-8)

Area	1.06	ha	
Runoff Coefficient	0.95		
Time of Concentration	10	min	
	Interpolated		
Return Rate	2	year	
Coefficient	1		
Rainfall Intesity	76.8	mm/hr	
Allowable Release Rate	0.21	m^3/s	214.09 L/s
Return Rate	5	year	
Coefficient	1		
Rainfall Intesity	104.2	mm/hr	
Allowable Release Rate	0.29	m^3/s	290.43 L/s
Return Rate	10	year	
Coefficient	1		
Rainfall Intesity	122.1	mm/hr	
Allowable Release Rate	0.34	m^3/s	340.47 L/s
Return Rate	25	year	
Coefficient	1.1		
Rainfall Intesity	144.7	mm/hr	
Allowable Release Rate	0.44	m^3/s	443.66 L/s
Return Rate	50	year	
Coefficient	1.2		
Rainfall Intesity	161.5	mm/hr	
Allowable Release Rate	0.54	m^3/s	540.11 L/s
Return Rate	100	year	
Coefficient	1.25		
Rainfall Intesity	178.6	mm/hr	
Allowable Release Rate	0.62	m^3/s	622.16 L/s
Return Rate	100	year	+ 20%
Coefficient	1.25		
Rainfall Intesity	214.3	mm/hr	
Allowable Release Rate	0.75	m^3/s	746.59 L/s

Uncontrolled (P-1 to P-4)

Area	0.48	ha	
Runoff Coefficient	0.81		
Time of Concentration	10	min	
	Interpolated		
Return Rate	2	year	
Coefficient	1		
Rainfall Intesity	76.8	mm/hr	
Allowable Release Rate	0.08	m^3/s	83.26 L/s
Return Rate	5	year	
Coefficient	1		
Rainfall Intesity	104.2	mm/hr	
Allowable Release Rate	0.11	m^3/s	112.95 L/s
Return Rate	10	year	
Coefficient	1		
Rainfall Intesity	122.1	mm/hr	
Allowable Release Rate	0.13	m^3/s	132.40 L/s
Return Rate	25	year	
Coefficient	1.1		
Rainfall Intesity	144.7	mm/hr	
Allowable Release Rate	0.17	m^3/s	172.53 L/s
Return Rate	50	year	
Coefficient	1.2		
Rainfall Intesity	161.5	mm/hr	
Allowable Release Rate	0.21	m^3/s	210.04 L/s
Return Rate	100	year	
Coefficient	1.25		
Rainfall Intesity	178.6	mm/hr	
Allowable Release Rate	0.24	m^3/s	241.95 L/s
Return Rate	100	year	+ 20%
Coefficient	1.25		
Rainfall Intesity	214.3	mm/hr	
Allowable Release Rate	0.29	m^3/s	290.34 L/s

Storm (yrs)	Coeff A	Coeff B	Coeff C
2	733.0	0.81	6.199
5	998.1	0.814	6.053
10	1174.2	0.816	6.014
25	1402.9	0.819	6.018
50	1569.6	0.82	6.014
100	1735.7	0.82	6.014

Equation of Curve

$$I = A * (T)^{\wedge c}$$

Where:

I = Storm Intensity (mm/hr)
A = Coefficient (A)
C = Exponent (C)
T = Time of Concentration (Hours)

Modified Rational Method

$$Q = (C_i * C * I * A) / 360$$

Where:

Q = Flow Rate (m3/s)
Ci = Peaking Coefficient
C = Rational Method Runoff Coefficient
I = Storm Intensity (mm/hr)
A = Area (ha.)

WARE MALCOMB
architecture | planning | interiors
graphics | civil engineering

Date: September 6, 2023
Revision No.:
Project No.: OTW21-0002
Designed By: N.I.
Checked By: D.N.

Proposed Industrial Building
2760-2770 Sheffield Road
Ottawa, ON K1B 3V8

Table 6 - Rooftop Storage Calculations

TOTAL COMBINED ROOFTOP STORAGE @ 10 mins(m^3)	300.0
TOTAL COMBINED ROOFTOP STORAGE MAXIMUM	523.5

SUMMARY

	Building A		
Rooftop Area (m^2)	10563		
Number of Drains	19		
Total Number of Weirs	19		
Discharge/Weir/Drain (L/m)	75.70823568	20 GPM	1/2 Inch Closed
Total Roof Discharge (L/s)	23.97		
Maximum Design Depth (mm)	150		
Roof Storage at 10 minutes (m^3)	300.0		
Maximum Roof Storage (m^3)	523.5		
Maximum Storage Depth (mm)	150		

BUILDING A

Time (min)	Intensity (mm/hr)	Q_{total} (m^3/s)	$Q_{discharge}$ (m^3/s)	$Q_{storage}$ (m^3/s)	Volume to Store (m^3)
10	178.6	0.524	0.0240	0.500	300.0
50	64.0	0.188	0.0240	0.164	491.0
75	47.3	0.139	0.0240	0.115	516.1
110	35.2	0.103	0.0240	0.079	523.5
125	31.9	0.093	0.0240	0.070	521.4
150	27.6	0.081	0.0240	0.057	513.4

Area per Drain	555.95	m^2
Equivalent Radius	13.30	m
Original Slope	0.65	%
New Radius	13.26	m
Ponding Depth	150	mm

Elevation (m)	Outflow (m3/sec)	Storage (m3)	Storage (ha - m)
100.00	0	0	0.0000
100.03	0.006	20.94	0.0021
100.06	0.012	83.76	0.0084
100.09	0.018	188.45	0.0188
100.12	0.021	335.03	0.0335
100.15	0.024	523.48	0.0523

WATTS®	Adjustable Accutrol Weir Tag: _____	Adjustable Flow Control for Roof Drains

ADJUSTABLE ACCUTROL (for Large Sump Roof Drains only)

For more flexibility in controlling flow with heads deeper than 2", Watts Drainage offers the Adjustable Accutrol. The Adjustable Accutrol Weir is designed with a single parabolic opening that can be covered to restrict flow above 2" of head to less than 5 gpm per inch, up to 6" of head. To adjust the flow rate for depths over 2" of head, set the slot in the adjustable upper cone according to the flow rate required. Refer to Table 1 below.
Note: Flow rates are directly proportional to the amount of weir opening that is exposed.

EXAMPLE:

For example, if the adjustable upper cone is set to cover 1/2 of the weir opening, flow rates above 2"of head will be restricted to 2-1/2 gpm per inch of head.

Therefore, at 3"of head, the flow rate through the Accutrol Weir that has 1/2 the slot exposed will be:
[5 gpm (per inch of head) x 2 inches of head] + 2-1/2 gpm (for the third inch of head) = 12-1/2 gpm.

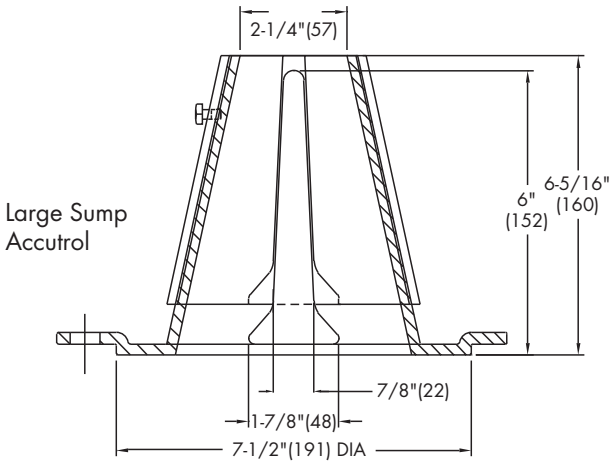

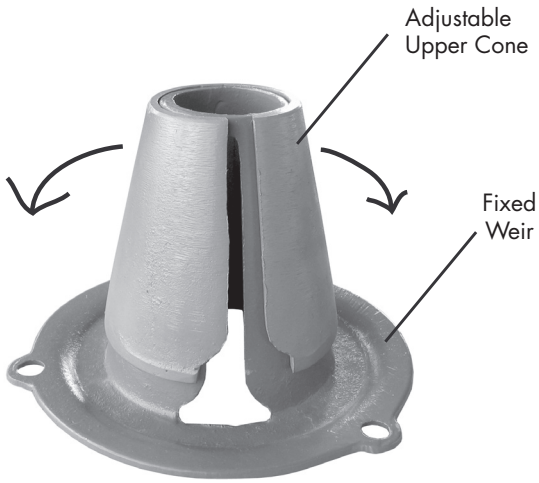

1/2 Weir Opening Exposed Shown Above

TABLE 1. Adjustable Accutrol Flow Rate Settings

Weir Opening Exposed	1"	2"	3"	4"	5"	6"
	Flow Rate (gallons per minute)					
Fully Exposed	5	10	15	20	25	30
3/4	5	10	13.75	17.5	21.25	25
1/2	5	10	12.5	15	17.5	20
1/4	5	10	11.25	12.5	13.75	15
Closed	5	5	5	5	5	5

Job Name _____ Contractor _____

Job Location _____ Contractor's P.O. No. _____

Engineer _____ Representative _____

Watts product specifications in U.S. customary units and metric are approximate and are provided for reference only. For precise measurements, please contact Watts Technical Service. Watts reserves the right to change or modify product design, construction, specifications, or materials without prior notice and without incurring any obligation to make such changes and modifications on Watts products previously or subsequently sold.

WATTS®
A Watts Water Technologies Company

USA: Tel: (800) 338-2581 • Fax: (828) 248-3929 • Watts.com
Canada: Tel: (905) 332-4090 • Fax: (905) 332-7068 • Watts.ca
Latin America: Tel: (52) 81-1001-8600 • Fax: (52) 81-8000-7091 • Watts.com

© 2016 Watts

WARE MALCOMB
architecture | planning | interiors
graphics | civil engineering

Date: September 6, 2023
Revision No.:
Project No.: OTW21-0002
Designed By: N.I.
Checked By: D.N.

Proposed Industrial Building
2760-2770 Sheffield Road
Ottawa, ON K1B 3V8

Table 7 - Greenstorm Stage - Storage Calculation

Underground Storage #1

Chamber Length: 28.8 m
Chamber Width: 11.2 m
Chamber Height: 1.01 m
Storage Void Ratio: 0.96
System Area: 322.56 m^2
System Base Elev.: 64.7 m
System Volume: 312.7542 m^3

Elevation	Volume	Cumulutive Storage Volume
64.7	0	0
64.725	7.74144	7.74144
64.75	7.74144	15.48288
64.775	7.74144	23.22432
64.8	7.74144	30.96576
64.825	7.74144	38.7072
64.85	7.74144	46.44864
64.875	7.74144	54.19008
64.9	7.74144	61.93152
64.925	7.74144	69.67296
64.95	7.74144	77.4144
64.975	7.74144	85.15584
65	7.74144	92.89728
65.025	7.74144	100.63872
65.05	7.74144	108.38016
65.075	7.74144	116.1216
65.1	7.74144	123.86304
65.125	7.74144	131.60448
65.15	7.74144	139.34592
65.175	7.74144	147.08736
65.2	7.74144	154.8288
65.225	7.74144	162.57024
65.25	7.74144	170.31168
65.275	7.74144	178.05312
65.3	7.74144	185.79456
65.325	7.74144	193.536
65.35	7.74144	201.27744
65.375	7.74144	209.01888
65.4	7.74144	216.76032
65.425	7.74144	224.50176
65.45	7.74144	232.2432
65.475	7.74144	239.98464
65.5	7.74144	247.72608
65.525	7.74144	255.46752
65.55	7.74144	263.20896
65.575	7.74144	270.9504
65.6	7.74144	278.69184
65.625	7.74144	286.43328
65.65	7.74144	294.17472
65.675	7.74144	301.91616
65.71	10.838	312.754176

Underground Storage #2

Chamber Length: 54.12 m
Chamber Width: 11.2 m
Chamber Height: 1.01 m
Storage Void Ratio: 0.96
System Area: 606.144 m^2
System Base Elev.: 64.7 m
System Volume: 587.7172 m^3

Elevation	Volume	Cumulutive Storage Volume
64.7	0	0
64.725	14.54746	14.547456
64.75	14.54746	29.094912
64.775	14.54746	43.642368
64.8	14.54746	58.189824
64.825	14.54746	72.73728
64.85	14.54746	87.284736
64.875	14.54746	101.832192
64.9	14.54746	116.379648
64.925	14.54746	130.927104
64.95	14.54746	145.47456
64.975	14.54746	160.022016
65	14.54746	174.569472
65.025	14.54746	189.116928
65.05	14.54746	203.664384
65.075	14.54746	218.21184
65.1	14.54746	232.759296
65.125	14.54746	247.306752
65.15	14.54746	261.854208
65.175	14.54746	276.401664
65.2	14.54746	290.94912
65.225	14.54746	305.496576
65.25	14.54746	320.044032
65.275	14.54746	334.591488
65.3	14.54746	349.138944
65.325	14.54746	363.6864
65.35	14.54746	378.233856
65.375	14.54746	392.781312
65.4	14.54746	407.328768
65.425	14.54746	421.876224
65.45	14.54746	436.42368
65.475	14.54746	450.971136
65.5	14.54746	465.518592
65.525	14.54746	480.066048
65.55	14.54746	494.613504
65.575	14.54746	509.16096
65.6	14.54746	523.708416
65.625	14.54746	538.255872
65.65	14.54746	552.803328
65.675	14.54746	567.350784
65.71	20.36644	587.7172224

WARE MALCOMB
architecture | planning | interiors
graphics | civil engineering

Date: September 6, 2023
Revision No.:
Project No.: OTW21-0002
Designed By: N.I.
Checked By: D.N.

Proposed Industrial Building
2760-2770 Sheffield Road
Ottawa, ON K1B 3V8

Table 8 - Superpipe Calculations

Depth of Ponding	Pipe/Structure	Length	Diameter	Area	D. Inv.	U. Inv.	Depth 1	Depth 2	% Avg. Deptl	% Area	V (pipe)
64.7	1	45.69	0.375	0.11	64.86	64.98	0	0	0.00	0%	0.00
	2	42.01	0.525	0.22	64.78	64.83	0	0	0.00	0%	0.00
	3	36.02	0.375	0.11	64.78	64.9	0	0	0.00	0%	0.00
	4	1.7	0.6	0.28	64.7	64.72	0	0	0.00	0%	0.00
	5	7.4	0.6	0.28	64.69	64.7	0.01	0	0.01	1%	0.02
	6	4.84	0.6	0.28	64.69	64.7	0.01	0	0.01	1%	0.01
	7	2.54	0.6	0.28	64.7	64.74	0	0	0.00	0%	0.00
	8	80.41	0.6	0.28	64.74	64.91	0	0	0.00	0%	0.00
	9	51.13	0.6	0.28	64.91	65.01	0	0	0.00	0%	0.00
	10	25.36	0.6	0.28	65.01	65.06	0	0	0.00	0%	0.00
	11	31.85	0.525	0.22	65.06	65.18	0	0	0.00	0%	0.00
	12	46.99	0.45	0.16	65.18	65.3	0	0	0.00	0%	0.00
	13	36.52	0.375	0.11	65.3	65.4	0	0	0.00	0%	0.00
	CB1		0.6	0.36	65.4			0			0.00
	CBMH2		1.2	1.13	64.98			0			0.00
	CBMH3		1.2	1.13	64.83			0			0.00
	CBMH4		1.2	1.13	64.9			0			0.00
	CBMH5		1.2	1.13	64.74			0			0.00
	CBMH6		1.2	1.13	64.91			0			0.00
	CBMH7		1.2	1.13	65.01			0			0.00
	CBMH8		1.2	1.13	65.18			0			0.00
	CBMH9		1.2	1.13	65.3			0			0.00
	MH3		1.2	1.13	64.66			0.04			0.05
	MH4		1.2	1.13	64.72			0			0.00
	MH5		1.2	1.13	65.06			0			0.00
	GREENSTORM										0
Total											**0.08**

Depth of Ponding	Pipe/Structure	Length	Diameter	Area	D. Inv.	U. Inv.	Depth 1	Depth 2	% Avg. Deptl	% Area	V (pipe)
64.75	1	45.69	0.375	0.11	64.86	64.98	0	0	0.00	0%	0.00
	2	42.01	0.525	0.22	64.78	64.83	0	0	0.00	0%	0.00
	3	36.02	0.375	0.11	64.78	64.9	0	0	0.00	0%	0.00
	4	1.7	0.6	0.28	64.7	64.72	0.05	0.03	0.07	7%	0.03
	5	7.4	0.6	0.28	64.69	64.7	0.06	0.05	0.09	9%	0.19
	6	4.84	0.6	0.28	64.69	64.7	0.06	0.05	0.09	9%	0.12
	7	2.54	0.6	0.28	64.7	64.74	0.05	0.01	0.05	5%	0.04
	8	80.41	0.6	0.28	64.74	64.91	0.01	0	0.01	1%	0.23
	9	51.13	0.6	0.28	64.91	65.01	0	0	0.00	0%	0.00
	10	25.36	0.6	0.28	65.01	65.06	0	0	0.00	0%	0.00
	11	31.85	0.525	0.22	65.06	65.18	0	0	0.00	0%	0.00
	12	46.99	0.45	0.16	65.18	65.3	0	0	0.00	0%	0.00
	13	36.52	0.375	0.11	65.3	65.4	0	0	0.00	0%	0.00
	CB1		0.6	0.36	65.4			0			0.00
	CBMH2		1.2	1.13	64.98			0			0.00
	CBMH3		1.2	1.13	64.83			0			0.00
	CBMH4		1.2	1.13	64.9			0			0.00
	CBMH5		1.2	1.13	64.74			0.01			0.01
	CBMH6		1.2	1.13	64.91			0			0.00
	CBMH7		1.2	1.13	65.01			0			0.00
	CBMH8		1.2	1.13	65.18			0			0.00
	CBMH9		1.2	1.13	65.3			0			0.00
	MH3		1.2	1.13	64.66			0.09			0.10
	MH4		1.2	1.13	64.72			0.03			0.03
	MH5		1.2	1.13	65.06			0			0.00
	GREENSTORM										44.577792
Total											**45.33**

Depth of Ponding	Pipe/Structure	Length	Diameter	Area	D. Inv.	U. Inv.	Depth 1	Depth 2	% Avg. Deptl	% Area	V (pipe)
64.8	1	45.69	0.375	0.11	64.86	64.98	0	0	0.00	0%	0.00
	2	42.01	0.525	0.22	64.78	64.83	0.02	0	0.02	2%	0.18
	3	36.02	0.375	0.11	64.78	64.9	0.02	0	0.03	3%	0.12
	4	1.7	0.6	0.28	64.7	64.72	0.1	0.08	0.15	15%	0.07
	5	7.4	0.6	0.28	64.69	64.7	0.11	0.1	0.17	17%	0.36
	6	4.84	0.6	0.28	64.69	64.7	0.11	0.1	0.17	17%	0.23
	7	2.54	0.6	0.28	64.7	64.74	0.1	0.06	0.13	13%	0.09
	8	80.41	0.6	0.28	64.74	64.91	0.06	0	0.05	5%	1.14
	9	51.13	0.6	0.28	64.91	65.01	0	0	0.00	0%	0.00
	10	25.36	0.6	0.28	65.01	65.06	0	0	0.00	0%	0.00
	11	31.85	0.525	0.22	65.06	65.18	0	0	0.00	0%	0.00
	12	46.99	0.45	0.16	65.18	65.3	0	0	0.00	0%	0.00
	13	36.52	0.375	0.11	65.3	65.4	0	0	0.00	0%	0.00
	CB1		0.6	0.36	65.4			0			0.00
	CBMH2		1.2	1.13	64.98			0			0.00

	CBMH3	1.2	1.13	64.83	0	0.00
	CBMH4	1.2	1.13	64.9	0	0.00
	CBMH5	1.2	1.13	64.74	0.06	0.07
	CBMH6	1.2	1.13	64.91	0	0.00
	CBMH7	1.2	1.13	65.01	0	0.00
	CBMH8	1.2	1.13	65.18	0	0.00
	CBMH9	1.2	1.13	65.3	0	0.00
	MH3	1.2	1.13	64.66	0.14	0.16
	MH4	1.2	1.13	64.72	0.08	0.09
	MH5	1.2	1.13	65.06	0	0.00
	GREENSTORM					89.155584
Total						91.66

Depth of Ponding	Pipe/Structure	Length	Diameter	Area	D. Inv.	U. Inv.	Depth 1	Depth 2	% Avg. Deptl	% Area	V (pipe)
64.85	1	45.69	0.375	0.11	64.86	64.98	0	0	0.00	0%	0.00
	2	42.01	0.525	0.22	64.78	64.83	0.07	0.02	0.09	9%	0.82
	3	36.02	0.375	0.11	64.78	64.9	0.07	0	0.09	9%	0.36
	4	1.7	0.6	0.28	64.7	64.72	0.15	0.13	0.23	23%	0.11
	5	7.4	0.6	0.28	64.69	64.7	0.16	0.15	0.26	26%	0.54
	6	4.84	0.6	0.28	64.69	64.7	0.16	0.15	0.26	26%	0.36
	7	2.54	0.6	0.28	64.7	64.74	0.15	0.11	0.22	22%	0.16
	8	80.41	0.6	0.28	64.74	64.91	0.11	0	0.09	9%	2.05
	9	51.13	0.6	0.28	64.91	65.01	0	0	0.00	0%	0.00
	10	25.36	0.6	0.28	65.01	65.06	0	0	0.00	0%	0.00
	11	31.85	0.525	0.22	65.06	65.18	0	0	0.00	0%	0.00
	12	46.99	0.45	0.16	65.18	65.3	0	0	0.00	0%	0.00
	13	36.52	0.375	0.11	65.3	65.4	0	0	0.00	0%	0.00
	CB1		0.6	0.36	65.4			0			0.00
	CBMH2		1.2	1.13	64.98			0			0.00
	CBMH3		1.2	1.13	64.83			0.02			0.02
	CBMH4		1.2	1.13	64.9			0			0.00
	CBMH5		1.2	1.13	64.74			0.11			0.12
	CBMH6		1.2	1.13	64.91			0			0.00
	CBMH7		1.2	1.13	65.01			0			0.00
	CBMH8		1.2	1.13	65.18			0			0.00
	CBMH9		1.2	1.13	65.3			0			0.00
	MH3		1.2	1.13	64.66			0.19			0.21
	MH4		1.2	1.13	64.72			0.13			0.15
	MH5		1.2	1.13	65.06			0			0.00
	GREENSTORM										133.733376
Total											138.63

Depth of Ponding	Pipe/Structure	Length	Diameter	Area	D. Inv.	U. Inv.	Depth 1	Depth 2	% Avg. Deptl	% Area	V (pipe)
64.9	1	45.69	0.375	0.11	64.86	64.98	0.04	0	0.05	5%	0.25
	2	42.01	0.525	0.22	64.78	64.83	0.12	0.07	0.18	18%	1.64
	3	36.02	0.375	0.11	64.78	64.9	0.12	-1.4E-14	0.16	16%	0.64
	4	1.7	0.6	0.28	64.7	64.72	0.2	0.18	0.32	32%	0.15
	5	7.4	0.6	0.28	64.69	64.7	0.21	0.2	0.34	34%	0.71
	6	4.84	0.6	0.28	64.69	64.7	0.21	0.2	0.34	34%	0.47
	7	2.54	0.6	0.28	64.7	64.74	0.2	0.16	0.30	30%	0.22
	8	80.41	0.6	0.28	64.74	64.91	0.16	0	0.13	13%	2.96
	9	51.13	0.6	0.28	64.91	65.01	0	0	0.00	0%	0.00
	10	25.36	0.6	0.28	65.01	65.06	0	0	0.00	0%	0.00
	11	31.85	0.525	0.22	65.06	65.18	0	0	0.00	0%	0.00
	12	46.99	0.45	0.16	65.18	65.3	0	0	0.00	0%	0.00
	13	36.52	0.375	0.11	65.3	65.4	0	0	0.00	0%	0.00
	CB1		0.6	0.36	65.4			0			0.00
	CBMH2		1.2	1.13	64.98			0			0.00
	CBMH3		1.2	1.13	64.83			0.07			0.08
	CBMH4		1.2	1.13	64.9			0			0.00
	CBMH5		1.2	1.13	64.74			0.16			0.18
	CBMH6		1.2	1.13	64.91			0			0.00
	CBMH7		1.2	1.13	65.01			0			0.00
	CBMH8		1.2	1.13	65.18			0			0.00
	CBMH9		1.2	1.13	65.3			0			0.00
	MH3		1.2	1.13	64.66			0.24			0.27
	MH4		1.2	1.13	64.72			0.18			0.20
	MH5		1.2	1.13	65.06			0			0.00
	GREENSTORM										178.311168
Total											186.07

Depth of Ponding	Pipe/Structure	Length	Diameter	Area	D. Inv.	U. Inv.	Depth 1	Depth 2	% Avg. Deptl	% Area	V (pipe)
64.95	1	45.69	0.375	0.11	64.86	64.98	0.09	0	0.12	12%	0.61
	2	42.01	0.525	0.22	64.78	64.83	0.17	0.12	0.28	28%	2.55
	3	36.02	0.375	0.11	64.78	64.9	0.17	0.05	0.29	29%	1.15
	4	1.7	0.6	0.28	64.7	64.72	0.25	0.23	0.40	40%	0.19
	5	7.4	0.6	0.28	64.69	64.7	0.26	0.25	0.42	42%	0.88
	6	4.84	0.6	0.28	64.69	64.7	0.26	0.25	0.42	42%	0.57
	7	2.54	0.6	0.28	64.7	64.74	0.25	0.21	0.38	38%	0.27
	8	80.41	0.6	0.28	64.74	64.91	0.21	0.04	0.21	21%	4.77
	9	51.13	0.6	0.28	64.91	65.01	0.04	0	0.03	3%	0.43
	10	25.36	0.6	0.28	65.01	65.06	0	0	0.00	0%	0.00
	11	31.85	0.525	0.22	65.06	65.18	0	0	0.00	0%	0.00
	12	46.99	0.45	0.16	65.18	65.3	0	0	0.00	0%	0.00
	13	36.52	0.375	0.11	65.3	65.4	0	0	0.00	0%	0.00

	CB1	0.6	0.36	65.4	0	0.00
	CBMH2	1.2	1.13	64.98	0	0.00
	CBMH3	1.2	1.13	64.83	0.12	0.14
	CBMH4	1.2	1.13	64.9	0.05	0.06
	CBMH5	1.2	1.13	64.74	0.21	0.24
	CBMH6	1.2	1.13	64.91	0.04	0.05
	CBMH7	1.2	1.13	65.01	0	0.00
	CBMH8	1.2	1.13	65.18	0	0.00
	CBMH9	1.2	1.13	65.3	0	0.00
	MH3	1.2	1.13	64.66	0.29	0.33
	MH4	1.2	1.13	64.72	0.23	0.26
	MH5	1.2	1.13	65.06	0	0.00
	GREENSTORM					222.88896
Total						235.38

Depth of Ponding	Pipe/Structure	Length	Diameter	Area	D. Inv.	U. Inv.	Depth 1	Depth 2	% Avg. Deptl	% Area	V (pipe)
65	1	45.69	0.375	0.11	64.86	64.98	0.14	0.02	0.21	21%	1.06
	2	42.01	0.525	0.22	64.78	64.83	0.22	0.17	0.37	37%	3.36
	3	36.02	0.375	0.11	64.78	64.9	0.22	0.1	0.43	43%	1.71
	4	1.7	0.6	0.28	64.7	64.72	0.3	0.28	0.48	48%	0.23
	5	7.4	0.6	0.28	64.69	64.7	0.31	0.3	0.51	51%	1.07
	6	4.84	0.6	0.28	64.69	64.7	0.31	0.3	0.51	51%	0.70
	7	2.54	0.6	0.28	64.7	64.74	0.3	0.26	0.47	47%	0.34
	8	80.41	0.6	0.28	64.74	64.91	0.26	0.09	0.29	29%	6.59
	9	51.13	0.6	0.28	64.91	65.01	0.09	0	0.07	7%	1.01
	10	25.36	0.6	0.28	65.01	65.06	0	0	0.00	0%	0.00
	11	31.85	0.525	0.22	65.06	65.18	0	0	0.00	0%	0.00
	12	46.99	0.45	0.16	65.18	65.3	0	0	0.00	0%	0.00
	13	36.52	0.375	0.11	65.3	65.4	0	0	0.00	0%	0.00
	CB1		0.6	0.36	65.4			0			0.00
	CBMH2		1.2	1.13	64.98			0.02			0.02
	CBMH3		1.2	1.13	64.83			0.17			0.19
	CBMH4		1.2	1.13	64.9			0.1			0.11
	CBMH5		1.2	1.13	64.74			0.26			0.29
	CBMH6		1.2	1.13	64.91			0.09			0.10
	CBMH7		1.2	1.13	65.01			0			0.00
	CBMH8		1.2	1.13	65.18			0			0.00
	CBMH9		1.2	1.13	65.3			0			0.00
	MH3		1.2	1.13	64.66			0.34			0.38
	MH4		1.2	1.13	64.72			0.28			0.32
	MH5		1.2	1.13	65.06			0			0.00
	GREENSTORM										267.466752
Total											284.97

Depth of Ponding	Pipe/Structure	Length	Diameter	Area	D. Inv.	U. Inv.	Depth 1	Depth 2	% Avg. Deptl	% Area	V (pipe)
65.05	1	45.69	0.375	0.11	64.86	64.98	0.19	0.07	0.35	35%	1.77
	2	42.01	0.525	0.22	64.78	64.83	0.27	0.22	0.47	47%	4.27
	3	36.02	0.375	0.11	64.78	64.9	0.27	0.15	0.56	56%	2.23
	4	1.7	0.6	0.28	64.7	64.72	0.35	0.33	0.57	57%	0.27
	5	7.4	0.6	0.28	64.69	64.7	0.36	0.35	0.59	59%	1.23
	6	4.84	0.6	0.28	64.69	64.7	0.36	0.35	0.59	59%	0.81
	7	2.54	0.6	0.28	64.7	64.74	0.35	0.31	0.55	55%	0.39
	8	80.41	0.6	0.28	64.74	64.91	0.31	0.14	0.37	37%	8.41
	9	51.13	0.6	0.28	64.91	65.01	0.14	0.04	0.15	15%	2.17
	10	25.36	0.6	0.28	65.01	65.06	0.04	0	0.03	3%	0.22
	11	31.85	0.525	0.22	65.06	65.18	0	0	0.00	0%	0.00
	12	46.99	0.45	0.16	65.18	65.3	0	0	0.00	0%	0.00
	13	36.52	0.375	0.11	65.3	65.4	0	0	0.00	0%	0.00
	CB1		0.6	0.36	65.4			0			0.00
	CBMH2		1.2	1.13	64.98			0.07			0.08
	CBMH3		1.2	1.13	64.83			0.22			0.25
	CBMH4		1.2	1.13	64.9			0.15			0.17
	CBMH5		1.2	1.13	64.74			0.31			0.35
	CBMH6		1.2	1.13	64.91			0.14			0.16
	CBMH7		1.2	1.13	65.01			0.04			0.05
	CBMH8		1.2	1.13	65.18			0			0.00
	CBMH9		1.2	1.13	65.3			0			0.00
	MH3		1.2	1.13	64.66			0.39			0.44
	MH4		1.2	1.13	64.72			0.33			0.37
	MH5		1.2	1.13	65.06			0			0.00
	GREENSTORM										312.044544
Total											335.69

Depth of Ponding	Pipe/Structure	Length	Diameter	Area	D. Inv.	U. Inv.	Depth 1	Depth 2	% Avg. Deptl	% Area	V (pipe)
65.1	1	45.69	0.375	0.11	64.86	64.98	0.24	0.12	0.48	48%	2.42
	2	42.01	0.525	0.22	64.78	64.83	0.32	0.27	0.56	56%	5.09
	3	36.02	0.375	0.11	64.78	64.9	0.32	0.2	0.69	69%	2.75
	4	1.7	0.6	0.28	64.7	64.72	0.4	0.38	0.65	65%	0.31
	5	7.4	0.6	0.28	64.69	64.7	0.41	0.4	0.67	67%	1.40
	6	4.84	0.6	0.28	64.69	64.7	0.41	0.4	0.67	67%	0.92
	7	2.54	0.6	0.28	64.7	64.74	0.4	0.36	0.63	63%	0.45
	8	80.41	0.6	0.28	64.74	64.91	0.36	0.19	0.46	46%	10.46
	9	51.13	0.6	0.28	64.91	65.01	0.19	0.09	0.23	23%	3.33
	10	25.36	0.6	0.28	65.01	65.06	0.09	0.04	0.11	11%	0.79
	11	31.85	0.525	0.22	65.06	65.18	0.04	0	0.04	4%	0.28
	12	46.99	0.45	0.16	65.18	65.3	0	0	0.00	0%	0.00

	13	36.52	0.375	0.11	65.3	65.4	0	0	0.00	0%	0.00
	CB1		0.6	0.36	65.4			0			0.00
	CBMH2		1.2	1.13	64.98			0.12			0.14
	CBMH3		1.2	1.13	64.83			0.27			0.31
	CBMH4		1.2	1.13	64.9			0.2			0.23
	CBMH5		1.2	1.13	64.74			0.36			0.41
	CBMH6		1.2	1.13	64.91			0.19			0.21
	CBMH7		1.2	1.13	65.01			0.09			0.10
	CBMH8		1.2	1.13	65.18			0			0.00
	CBMH9		1.2	1.13	65.3			0			0.00
	MH3		1.2	1.13	64.66			0.44			0.50
	MH4		1.2	1.13	64.72			0.38			0.43
	MH5		1.2	1.13	65.06			0.04			0.05
	GREENSTORM										356.622336
Total											387.18

Depth of Ponding	Pipe/Structure	Length	Diameter	Area	D. Inv.	U. Inv.	Depth 1	Depth 2	% Avg. Deptl	% Area	V (pipe)
65.15	1	45.69	0.375	0.11	64.86	64.98	0.29	0.17	0.61	61%	3.08
	2	42.01	0.525	0.22	64.78	64.83	0.37	0.32	0.66	66%	6.00
	3	36.02	0.375	0.11	64.78	64.9	0.37	0.25	0.83	83%	3.30
	4	1.7	0.6	0.28	64.7	64.72	0.45	0.43	0.73	73%	0.35
	5	7.4	0.6	0.28	64.69	64.7	0.46	0.45	0.76	76%	1.59
	6	4.84	0.6	0.28	64.69	64.7	0.46	0.45	0.76	76%	1.04
	7	2.54	0.6	0.28	64.7	64.74	0.45	0.41	0.72	72%	0.52
	8	80.41	0.6	0.28	64.74	64.91	0.41	0.24	0.54	54%	12.28
	9	51.13	0.6	0.28	64.91	65.01	0.24	0.14	0.32	32%	4.63
	10	25.36	0.6	0.28	65.01	65.06	0.14	0.09	0.19	19%	1.36
	11	31.85	0.525	0.22	65.06	65.18	0.09	0	0.09	9%	0.62
	12	46.99	0.45	0.16	65.18	65.3	0	0	0.00	0%	0.00
	13	36.52	0.375	0.11	65.3	65.4	0	0	0.00	0%	0.00
	CB1		0.6	0.36	65.4			0			0.00
	CBMH2		1.2	1.13	64.98			0.17			0.19
	CBMH3		1.2	1.13	64.83			0.32			0.36
	CBMH4		1.2	1.13	64.9			0.25			0.28
	CBMH5		1.2	1.13	64.74			0.41			0.46
	CBMH6		1.2	1.13	64.91			0.24			0.27
	CBMH7		1.2	1.13	65.01			0.14			0.16
	CBMH8		1.2	1.13	65.18			0			0.00
	CBMH9		1.2	1.13	65.3			0			0.00
	MH3		1.2	1.13	64.66			0.49			0.55
	MH4		1.2	1.13	64.72			0.43			0.49
	MH5		1.2	1.13	65.06			0.09			0.10
	GREENSTORM										401.200128
Total											438.84

Depth of Ponding	Pipe/Structure	Length	Diameter	Area	D. Inv.	U. Inv.	Depth 1	Depth 2	% Avg. Deptl	% Area	V (pipe)
65.2	1	45.69	0.375	0.11	64.86	64.98	0.34	0.22	0.75	75%	3.78
	2	42.01	0.525	0.22	64.78	64.83	0.42	0.37	0.75	75%	6.82
	3	36.02	0.375	0.11	64.78	64.9	0.375	0.3	0.90	90%	3.58
	4	1.7	0.6	0.28	64.7	64.72	0.5	0.48	0.82	82%	0.39
	5	7.4	0.6	0.28	64.69	64.7	0.51	0.5	0.84	84%	1.76
	6	4.84	0.6	0.28	64.69	64.7	0.51	0.5	0.84	84%	1.15
	7	2.54	0.6	0.28	64.7	64.74	0.5	0.46	0.80	80%	0.57
	8	80.41	0.6	0.28	64.74	64.91	0.46	0.29	0.62	62%	14.10
	9	51.13	0.6	0.28	64.91	65.01	0.29	0.19	0.40	40%	5.78
	10	25.36	0.6	0.28	65.01	65.06	0.19	0.14	0.27	27%	1.94
	11	31.85	0.525	0.22	65.06	65.18	0.14	0.02	0.15	15%	1.03
	12	46.99	0.45	0.16	65.18	65.3	0.02	0	0.02	2%	0.15
	13	36.52	0.375	0.11	65.3	65.4	0	0	0.00	0%	0.00
	CB1		0.6	0.36	65.4			0			0.00
	CBMH2		1.2	1.13	64.98			0.22			0.25
	CBMH3		1.2	1.13	64.83			0.37			0.42
	CBMH4		1.2	1.13	64.9			0.3			0.34
	CBMH5		1.2	1.13	64.74			0.46			0.52
	CBMH6		1.2	1.13	64.91			0.29			0.33
	CBMH7		1.2	1.13	65.01			0.19			0.21
	CBMH8		1.2	1.13	65.18			0.02			0.02
	CBMH9		1.2	1.13	65.3			0			0.00
	MH3		1.2	1.13	64.66			0.54			0.61
	MH4		1.2	1.13	64.72			0.48			0.54
	MH5		1.2	1.13	65.06			0.14			0.16
	GREENSTORM										445.77792
Total											490.24

Depth of Ponding	Pipe/Structure	Length	Diameter	Area	D. Inv.	U. Inv.	Depth 1	Depth 2	% Avg. Deptl	% Area	V (pipe)
65.25	1	45.69	0.375	0.11	64.86	64.98	0.375	0.27	0.86	86%	4.34
	2	42.01	0.525	0.22	64.78	64.83	0.47	0.42	0.85	85%	7.73
	3	36.02	0.375	0.11	64.78	64.9	0.375	0.35	0.97	97%	3.86
	4	1.7	0.6	0.28	64.7	64.72	0.55	0.53	0.90	90%	0.43
	5	7.4	0.6	0.28	64.69	64.7	0.56	0.55	0.92	92%	1.92
	6	4.84	0.6	0.28	64.69	64.7	0.56	0.55	0.92	92%	1.26
	7	2.54	0.6	0.28	64.7	64.74	0.55	0.51	0.88	88%	0.63
	8	80.41	0.6	0.28	64.74	64.91	0.51	0.34	0.71	71%	16.14
	9	51.13	0.6	0.28	64.91	65.01	0.34	0.24	0.48	48%	6.94
	10	25.36	0.6	0.28	65.01	65.06	0.24	0.19	0.36	36%	2.58

	11	31.85	0.525	0.22	65.06	65.18	0.19	0.07	0.25	25%	1.72
	12	46.99	0.45	0.16	65.18	65.3	0.07	0	0.08	8%	0.60
	13	36.52	0.375	0.11	65.3	65.4	0	0	0.00	0%	0.00
	CB1		0.6	0.36	65.4			0			0.00
	CBMH2		1.2	1.13	64.98			0.27			0.31
	CBMH3		1.2	1.13	64.83			0.42			0.48
	CBMH4		1.2	1.13	64.9			0.35			0.40
	CBMH5		1.2	1.13	64.74			0.51			0.58
	CBMH6		1.2	1.13	64.91			0.34			0.38
	CBMH7		1.2	1.13	65.01			0.24			0.27
	CBMH8		1.2	1.13	65.18			0.07			0.08
	CBMH9		1.2	1.13	65.3			0			0.00
	MH3		1.2	1.13	64.66			0.59			0.67
	MH4		1.2	1.13	64.72			0.53			0.60
	MH5		1.2	1.13	65.06			0.19			0.21
	GREENSTORM										490.355712
Total											542.49

Depth of Ponding	Pipe/Structure	Length	Diameter	Area	D. Inv.	U. Inv.	Depth 1	Depth 2	% Avg. Deptl	% Area	V (pipe)
65.3	1	45.69	0.375	0.11	64.86	64.98	0.375	0.32	0.93	93%	4.69
	2	42.01	0.525	0.22	64.78	64.83	0.52	0.47	0.94	94%	8.55
	3	36.02	0.375	0.11	64.78	64.9	0.375	0.375	1.00	100%	3.98
	4	1.7	0.6	0.28	64.7	64.72	0.6	0.58	0.98	98%	0.47
	5	7.4	0.6	0.28	64.69	64.7	0.6	0.6	1.00	100%	2.09
	6	4.84	0.6	0.28	64.69	64.7	0.6	0.6	1.00	100%	1.37
	7	2.54	0.6	0.28	64.7	64.74	0.6	0.56	0.97	97%	0.70
	8	80.41	0.6	0.28	64.74	64.91	0.56	0.39	0.79	79%	17.96
	9	51.13	0.6	0.28	64.91	65.01	0.39	0.29	0.57	57%	8.24
	10	25.36	0.6	0.28	65.01	65.06	0.29	0.24	0.44	44%	3.15
	11	31.85	0.525	0.22	65.06	65.18	0.24	0.12	0.34	34%	2.34
	12	46.99	0.45	0.16	65.18	65.3	0.12	-2.8E-14	0.13	13%	0.97
	13	36.52	0.375	0.11	65.3	65.4	-2.8E-14	0	0.00	0%	0.00
	CB1		0.6	0.36	65.4			0			0.00
	CBMH2		1.2	1.13	64.98			0.32			0.36
	CBMH3		1.2	1.13	64.83			0.47			0.53
	CBMH4		1.2	1.13	64.9			0.4			0.45
	CBMH5		1.2	1.13	64.74			0.56			0.63
	CBMH6		1.2	1.13	64.91			0.39			0.44
	CBMH7		1.2	1.13	65.01			0.29			0.33
	CBMH8		1.2	1.13	65.18			0.12			0.14
	CBMH9		1.2	1.13	65.3			0			0.00
	MH3		1.2	1.13	64.66			0.64			0.72
	MH4		1.2	1.13	64.72			0.58			0.66
	MH5		1.2	1.13	65.06			0.24			0.27
	GREENSTORM										534.933504
Total											593.99

Depth of Ponding	Pipe/Structure	Length	Diameter	Area	D. Inv.	U. Inv.	Depth 1	Depth 2	% Avg. Deptl	% Area	V (pipe)
65.35	1	45.69	0.375	0.11	64.86	64.98	0.375	0.37	0.99	99%	5.00
	2	42.01	0.525	0.22	64.78	64.83	0.525	0.52	1.00	100%	9.09
	3	36.02	0.375	0.11	64.78	64.9	0.375	0.375	1.00	100%	3.98
	4	1.7	0.6	0.28	64.7	64.72	0.6	0.6	1.00	100%	0.48
	5	7.4	0.6	0.28	64.69	64.7	0.6	0.6	1.00	100%	2.09
	6	4.84	0.6	0.28	64.69	64.7	0.6	0.6	1.00	100%	1.37
	7	2.54	0.6	0.28	64.7	64.74	0.6	0.6	1.00	100%	0.72
	8	80.41	0.6	0.28	64.74	64.91	0.6	0.44	0.87	87%	19.78
	9	51.13	0.6	0.28	64.91	65.01	0.44	0.34	0.65	65%	9.40
	10	25.36	0.6	0.28	65.01	65.06	0.34	0.29	0.52	52%	3.73
	11	31.85	0.525	0.22	65.06	65.18	0.29	0.17	0.44	44%	3.03
	12	46.99	0.45	0.16	65.18	65.3	0.17	0.05	0.24	24%	1.79
	13	36.52	0.375	0.11	65.3	65.4	0.05	0	0.07	7%	0.28
	CB1		0.6	0.36	65.4			0			0.00
	CBMH2		1.2	1.13	64.98			0.37			0.42
	CBMH3		1.2	1.13	64.83			0.52			0.59
	CBMH4		1.2	1.13	64.9			0.45			0.51
	CBMH5		1.2	1.13	64.74			0.61			0.69
	CBMH6		1.2	1.13	64.91			0.44			0.50
	CBMH7		1.2	1.13	65.01			0.34			0.38
	CBMH8		1.2	1.13	65.18			0.17			0.19
	CBMH9		1.2	1.13	65.3			0.05			0.06
	MH3		1.2	1.13	64.66			0.69			0.78
	MH4		1.2	1.13	64.72			0.63			0.71
	MH5		1.2	1.13	65.06			0.29			0.33
	GREENSTORM										579.511296
Total											645.41

Depth of Ponding	Pipe/Structure	Length	Diameter	Area	D. Inv.	U. Inv.	Depth 1	Depth 2	% Avg. Deptl	% Area	V (pipe)
65.4	1	45.69	0.375	0.11	64.86	64.98	0.375	0.375	1.00	100%	5.05
	2	42.01	0.525	0.22	64.78	64.83	0.525	0.525	1.00	100%	9.09
	3	36.02	0.375	0.11	64.78	64.9	0.375	0.375	1.00	100%	3.98
	4	1.7	0.6	0.28	64.7	64.72	0.6	0.6	1.00	100%	0.48
	5	7.4	0.6	0.28	64.69	64.7	0.6	0.6	1.00	100%	2.09
	6	4.84	0.6	0.28	64.69	64.7	0.6	0.6	1.00	100%	1.37
	7	2.54	0.6	0.28	64.7	64.74	0.6	0.6	1.00	100%	0.72
	8	80.41	0.6	0.28	64.74	64.91	0.6	0.49	0.91	91%	20.69

	9	51.13	0.6	0.28	64.91	65.01	0.49	0.39	0.73	73%	10.55
	10	25.36	0.6	0.28	65.01	65.06	0.39	0.34	0.61	61%	4.37
	11	31.85	0.525	0.22	65.06	65.18	0.34	0.22	0.53	53%	3.65
	12	46.99	0.45	0.16	65.18	65.3	0.22	0.1	0.36	36%	2.69
	13	36.52	0.375	0.11	65.3	65.4	0.1	-4.3E-14	0.13	13%	0.52
	CB1		0.6	0.36	65.4			0			0.00
	CBMH2		1.2	1.13	64.98			0.42			0.48
	CBMH3		1.2	1.13	64.83			0.57			0.64
	CBMH4		1.2	1.13	64.9			0.5			0.57
	CBMH5		1.2	1.13	64.74			0.66			0.75
	CBMH6		1.2	1.13	64.91			0.49			0.55
	CBMH7		1.2	1.13	65.01			0.39			0.44
	CBMH8		1.2	1.13	65.18			0.22			0.25
	CBMH9		1.2	1.13	65.3			0.1			0.11
	MH3		1.2	1.13	64.66			0.74			0.84
	MH4		1.2	1.13	64.72			0.68			0.77
	MH5		1.2	1.13	65.06			0.34			0.38
	GREENSTORM										624.089088
Total											695.13

Depth of Ponding	Pipe/Structure	Length	Diameter	Area	D. Inv.	U. Inv.	Depth 1	Depth 2	% Avg. Deptl	% Area	V (pipe)
65.45	1	45.69	0.375	0.11	64.86	64.98	0.375	0.375	1.00	100%	5.05
	2	42.01	0.525	0.22	64.78	64.83	0.525	0.525	1.00	100%	9.09
	3	36.02	0.375	0.11	64.78	64.9	0.375	0.375	1.00	100%	3.98
	4	1.7	0.6	0.28	64.7	64.72	0.6	0.6	1.00	100%	0.48
	5	7.4	0.6	0.28	64.69	64.7	0.6	0.6	1.00	100%	2.09
	6	4.84	0.6	0.28	64.69	64.7	0.6	0.6	1.00	100%	1.37
	7	2.54	0.6	0.28	64.7	64.74	0.6	0.6	1.00	100%	0.72
	8	80.41	0.6	0.28	64.74	64.91	0.6	0.54	0.95	95%	21.60
	9	51.13	0.6	0.28	64.91	65.01	0.54	0.44	0.82	82%	11.85
	10	25.36	0.6	0.28	65.01	65.06	0.44	0.39	0.69	69%	4.95
	11	31.85	0.525	0.22	65.06	65.18	0.39	0.27	0.63	63%	4.34
	12	46.99	0.45	0.16	65.18	65.3	0.27	0.15	0.47	47%	3.51
	13	36.52	0.375	0.11	65.3	65.4	0.15	0.05	0.27	27%	1.09
	CB1		0.6	0.36	65.4			0.05			0.02
	CBMH2		1.2	1.13	64.98			0.47			0.53
	CBMH3		1.2	1.13	64.83			0.62			0.70
	CBMH4		1.2	1.13	64.9			0.55			0.62
	CBMH5		1.2	1.13	64.74			0.71			0.80
	CBMH6		1.2	1.13	64.91			0.54			0.61
	CBMH7		1.2	1.13	65.01			0.44			0.50
	CBMH8		1.2	1.13	65.18			0.27			0.31
	CBMH9		1.2	1.13	65.3			0.15			0.17
	MH3		1.2	1.13	64.66			0.79			0.89
	MH4		1.2	1.13	64.72			0.73			0.83
	MH5		1.2	1.13	65.06			0.39			0.44
	GREENSTORM										668.66688
Total											745.21

Depth of Ponding	Pipe/Structure	Length	Diameter	Area	D. Inv.	U. Inv.	Depth 1	Depth 2	% Avg. Deptl	% Area	V (pipe)
65.5	1	45.69	0.375	0.11	64.86	64.98	0.375	0.375	1.00	100%	5.05
	2	42.01	0.525	0.22	64.78	64.83	0.525	0.525	1.00	100%	9.09
	3	36.02	0.375	0.11	64.78	64.9	0.375	0.375	1.00	100%	3.98
	4	1.7	0.6	0.28	64.7	64.72	0.6	0.6	1.00	100%	0.48
	5	7.4	0.6	0.28	64.69	64.7	0.6	0.6	1.00	100%	2.09
	6	4.84	0.6	0.28	64.69	64.7	0.6	0.6	1.00	100%	1.37
	7	2.54	0.6	0.28	64.7	64.74	0.6	0.6	1.00	100%	0.72
	8	80.41	0.6	0.28	64.74	64.91	0.6	0.59	0.99	99%	22.51
	9	51.13	0.6	0.28	64.91	65.01	0.59	0.49	0.90	90%	13.01
	10	25.36	0.6	0.28	65.01	65.06	0.49	0.44	0.77	77%	5.52
	11	31.85	0.525	0.22	65.06	65.18	0.44	0.32	0.72	72%	4.96
	12	46.99	0.45	0.16	65.18	65.3	0.32	0.2	0.58	58%	4.33
	13	36.52	0.375	0.11	65.3	65.4	0.2	0.1	0.40	40%	1.61
	CB1		0.6	0.36	65.4			0.1			0.04
	CBMH2		1.2	1.13	64.98			0.52			0.59
	CBMH3		1.2	1.13	64.83			0.67			0.76
	CBMH4		1.2	1.13	64.9			0.6			0.68
	CBMH5		1.2	1.13	64.74			0.76			0.86
	CBMH6		1.2	1.13	64.91			0.59			0.67
	CBMH7		1.2	1.13	65.01			0.49			0.55
	CBMH8		1.2	1.13	65.18			0.32			0.36
	CBMH9		1.2	1.13	65.3			0.2			0.23
	MH3		1.2	1.13	64.66			0.84			0.95
	MH4		1.2	1.13	64.72			0.78			0.88
	MH5		1.2	1.13	65.06			0.44			0.50
	GREENSTORM										713.244672
Total											795.03

Depth of Ponding	Pipe/Structure	Length	Diameter	Area	D. Inv.	U. Inv.	Depth 1	Depth 2	% Avg. Deptl	% Area	V (pipe)
65.55	1	45.69	0.375	0.11	64.86	64.98	0.375	0.375	1.00	100%	5.05
	2	42.01	0.525	0.22	64.78	64.83	0.525	0.525	1.00	100%	9.09
	3	36.02	0.375	0.11	64.78	64.9	0.375	0.375	1.00	100%	3.98
	4	1.7	0.6	0.28	64.7	64.72	0.6	0.6	1.00	100%	0.48
	5	7.4	0.6	0.28	64.69	64.7	0.6	0.6	1.00	100%	2.09
	6	4.84	0.6	0.28	64.69	64.7	0.6	0.6	1.00	100%	1.37

	7	2.54	0.6	0.28	64.7	64.74	0.6	0.6	1.00	100%	0.72
	8	80.41	0.6	0.28	64.74	64.91	0.6	0.6	1.00	100%	22.74
	9	51.13	0.6	0.28	64.91	65.01	0.6	0.54	0.95	95%	13.73
	10	25.36	0.6	0.28	65.01	65.06	0.54	0.49	0.86	86%	6.17
	11	31.85	0.525	0.22	65.06	65.18	0.49	0.37	0.82	82%	5.65
	12	46.99	0.45	0.16	65.18	65.3	0.37	0.25	0.69	69%	5.16
	13	36.52	0.375	0.11	65.3	65.4	0.25	0.15	0.53	53%	2.14
	CB1		0.6	0.36	65.4			0.15			0.05
	CBMH2		1.2	1.13	64.98			0.57			0.64
	CBMH3		1.2	1.13	64.83			0.72			0.81
	CBMH4		1.2	1.13	64.9			0.65			0.74
	CBMH5		1.2	1.13	64.74			0.81			0.92
	CBMH6		1.2	1.13	64.91			0.64			0.72
	CBMH7		1.2	1.13	65.01			0.54			0.61
	CBMH8		1.2	1.13	65.18			0.37			0.42
	CBMH9		1.2	1.13	65.3			0.25			0.28
	MH3		1.2	1.13	64.66			0.89			1.01
	MH4		1.2	1.13	64.72			0.83			0.94
	MH5		1.2	1.13	65.06			0.49			0.55
	GREENSTORM										757.822464
Total											843.88

Depth of Ponding	Pipe/Structure	Length	Diameter	Area	D. Inv.	U. Inv.	Depth 1	Depth 2	% Avg. Deptl	% Area	V (pipe)
65.6	1	45.69	0.375	0.11	64.86	64.98	0.375	0.375	1.00	100%	5.05
	2	42.01	0.525	0.22	64.78	64.83	0.525	0.525	1.00	100%	9.09
	3	36.02	0.375	0.11	64.78	64.9	0.375	0.375	1.00	100%	3.98
	4	1.7	0.6	0.28	64.7	64.72	0.6	0.6	1.00	100%	0.48
	5	7.4	0.6	0.28	64.69	64.7	0.6	0.6	1.00	100%	2.09
	6	4.84	0.6	0.28	64.69	64.7	0.6	0.6	1.00	100%	1.37
	7	2.54	0.6	0.28	64.7	64.74	0.6	0.6	1.00	100%	0.72
	8	80.41	0.6	0.28	64.74	64.91	0.6	0.6	1.00	100%	22.74
	9	51.13	0.6	0.28	64.91	65.01	0.6	0.59	0.99	99%	14.31
	10	25.36	0.6	0.28	65.01	65.06	0.59	0.54	0.94	94%	6.74
	11	31.85	0.525	0.22	65.06	65.18	0.525	0.42	0.90	90%	6.21
	12	46.99	0.45	0.16	65.18	65.3	0.42	0.3	0.80	80%	5.98
	13	36.52	0.375	0.11	65.3	65.4	0.3	0.2	0.67	67%	2.70
	CB1		0.6	0.36	65.4			0.2			0.07
	CBMH2		1.2	1.13	64.98			0.62			0.70
	CBMH3		1.2	1.13	64.83			0.77			0.87
	CBMH4		1.2	1.13	64.9			0.7			0.79
	CBMH5		1.2	1.13	64.74			0.86			0.97
	CBMH6		1.2	1.13	64.91			0.69			0.78
	CBMH7		1.2	1.13	65.01			0.59			0.67
	CBMH8		1.2	1.13	65.18			0.42			0.48
	CBMH9		1.2	1.13	65.3			0.3			0.34
	MH3		1.2	1.13	64.66			0.94			1.06
	MH4		1.2	1.13	64.72			0.88			1.00
	MH5		1.2	1.13	65.06			0.54			0.61
	GREENSTORM										802.400256
Total											892.19

Depth of Ponding	Pipe/Structure	Length	Diameter	Area	D. Inv.	U. Inv.	Depth 1	Depth 2	% Avg. Deptl	% Area	V (pipe)
65.65	1	45.69	0.375	0.11	64.86	64.98	0.375	0.375	1.00	100%	5.05
	2	42.01	0.525	0.22	64.78	64.83	0.525	0.525	1.00	100%	9.09
	3	36.02	0.375	0.11	64.78	64.9	0.375	0.375	1.00	100%	3.98
	4	1.7	0.6	0.28	64.7	64.72	0.6	0.6	1.00	100%	0.48
	5	7.4	0.6	0.28	64.69	64.7	0.6	0.6	1.00	100%	2.09
	6	4.84	0.6	0.28	64.69	64.7	0.6	0.6	1.00	100%	1.37
	7	2.54	0.6	0.28	64.7	64.74	0.6	0.6	1.00	100%	0.72
	8	80.41	0.6	0.28	64.74	64.91	0.6	0.6	1.00	100%	22.74
	9	51.13	0.6	0.28	64.91	65.01	0.6	0.6	1.00	100%	14.46
	10	25.36	0.6	0.28	65.01	65.06	0.6	0.59	0.99	99%	7.10
	11	31.85	0.525	0.22	65.06	65.18	0.525	0.47	0.95	95%	6.55
	12	46.99	0.45	0.16	65.18	65.3	0.45	0.35	0.89	89%	6.65
	13	36.52	0.375	0.11	65.3	65.4	0.35	0.25	0.80	80%	3.23
	CB1		0.6	0.36	65.4			0.25			0.09
	CBMH2		1.2	1.13	64.98			0.67			0.76
	CBMH3		1.2	1.13	64.83			0.82			0.93
	CBMH4		1.2	1.13	64.9			0.75			0.85
	CBMH5		1.2	1.13	64.74			0.91			1.03
	CBMH6		1.2	1.13	64.91			0.74			0.84
	CBMH7		1.2	1.13	65.01			0.64			0.72
	CBMH8		1.2	1.13	65.18			0.47			0.53
	CBMH9		1.2	1.13	65.3			0.35			0.40
	MH3		1.2	1.13	64.66			0.99			1.12
	MH4		1.2	1.13	64.72			0.93			1.05
	MH5		1.2	1.13	65.06			0.59			0.67
	GREENSTORM										846.978048
Total											939.45

Depth of Ponding	Pipe/Structure	Length	Diameter	Area	D. Inv.	U. Inv.	Depth 1	Depth 2	% Avg. Deptl	% Area	V (pipe)
65.71	1	45.69	0.375	0.11	64.86	64.98	0.375	0.375	1.00	100%	5.05
	2	42.01	0.525	0.22	64.78	64.83	0.525	0.525	1.00	100%	9.09
	3	36.02	0.375	0.11	64.78	64.9	0.375	0.375	1.00	100%	3.98
	4	1.7	0.6	0.28	64.7	64.72	0.6	0.6	1.00	100%	0.48

	5	7.4	0.6	0.28	64.69	64.7	0.6	0.6	1.00	100%	2.09
	6	4.84	0.6	0.28	64.69	64.7	0.6	0.6	1.00	100%	1.37
	7	2.54	0.6	0.28	64.7	64.74	0.6	0.6	1.00	100%	0.72
	8	80.41	0.6	0.28	64.74	64.91	0.6	0.6	1.00	100%	22.74
	9	51.13	0.6	0.28	64.91	65.01	0.6	0.6	1.00	100%	14.46
	10	25.36	0.6	0.28	65.01	65.06	0.6	0.6	1.00	100%	7.17
	11	31.85	0.525	0.22	65.06	65.18	0.525	0.525	1.00	100%	6.89
	12	46.99	0.45	0.16	65.18	65.3	0.45	0.41	0.96	94%	7.03
	13	36.52	0.375	0.11	65.3	65.4	0.375	0.31	0.91	90%	3.63
	CB1		0.6	0.36	65.4			0.31			0.11
	CBMH2		1.2	1.13	64.98			0.73			0.83
	CBMH3		1.2	1.13	64.83			0.88			1.00
	CBMH4		1.2	1.13	64.9			0.81			0.92
	CBMH5		1.2	1.13	64.74			0.97			1.10
	CBMH6		1.2	1.13	64.91			0.8			0.90
	CBMH7		1.2	1.13	65.01			0.7			0.79
	CBMH8		1.2	1.13	65.18			0.53			0.60
	CBMH9		1.2	1.13	65.3			0.41			0.46
	MH3		1.2	1.13	64.66			1.05			1.19
	MH4		1.2	1.13	64.72			0.99			1.12
	MH5		1.2	1.13	65.06			0.65			0.74
	GREENSTORM										900.4713984
Total											994.91

WARE MALCOMB
architecture | planning | interiors
graphics | civil engineering

Date: September 6, 2023
Revision No.:
Project No.: OTW21-0002
Designed By: N.I.
Checked By: D.N.

Proposed Industrial Building
2760-2770 Sheffield Road
Ottawa, ON K1B 3V8

Table 9 - Stage - Storage - Discharge - Subsurface/Surface Storage Calculations - (Catchment Areas - P5 to P-7, P-9 to P-15 and P-25 to P-26)

Elevation (m)	Cum. Volume (m^3)	Storage Vol. (m^3)	Depth 1 (m)	Flow 1 (m^3/s)	Depth 2 (m)	Flow 2 (m^3/s)	Major Storm Control Weir				Total Flow (m^3/s)
							Depth 3 (m)	Overflow (x)	Rectangular 'C'	Flow (m^3/s)	
64.70	0	0	0.00	0.0000	0.00	0.0000	0.00	0.00	0.00	0.0000	0.0000
64.75	45	0	0.00	0.0000	0.00	0.0000	0.00	0.00	0.00	0.0000	0.0000
64.80	92	0	0.02	0.0168	0.00	0.0000	0.00	0.00	0.00	0.0000	0.0168
64.85	139	47	0.06	0.0349	0.00	0.0000	0.00	0.00	0.00	0.0000	0.0349
64.90	186	94	0.11	0.0465	0.00	0.0000	0.00	0.00	0.00	0.0000	0.0465
64.95	235	144	0.16	0.0556	0.00	0.0000	0.00	0.00	0.00	0.0000	0.0556
65.00	285	193	0.21	0.0635	0.00	0.0000	0.00	0.00	0.00	0.0000	0.0635
65.05	336	244	0.26	0.0705	0.00	0.0000	0.00	0.00	0.00	0.0000	0.0705
65.10	387	296	0.31	0.0769	0.00	0.0000	0.00	0.00	0.00	0.0000	0.0769
65.15	439	347	0.36	0.0828	0.00	0.0000	0.00	0.00	0.00	0.0000	0.0828
65.20	490	399	0.41	0.0882	0.00	0.0000	0.00	0.00	0.00	0.0000	0.0882
65.25	542	451	0.46	0.0934	0.00	0.0000	0.00	0.00	0.00	0.0000	0.0934
65.30	594	502	0.51	0.0983	0.00	0.0000	0.00	0.00	0.00	0.0000	0.0983
65.35	645	554	0.56	0.1030	0.00	0.0000	0.00	0.00	0.00	0.0000	0.1030
65.40	695	603	0.61	0.1074	0.00	0.0000	0.00	0.00	0.00	0.0000	0.1074
65.45	745	654	0.66	0.1117	0.00	0.0000	0.00	0.00	0.00	0.0000	0.1117
65.50	795	703	0.71	0.1158	0.00	0.0000	0.00	0.00	0.00	0.0000	0.1158
65.55	844	752	0.76	0.1198	0.00	0.0000	0.00	0.00	0.00	0.0000	0.1198
65.60	892	801	0.81	0.1237	0.00	0.0000	0.00	0.00	0.00	0.0000	0.1237
65.65	939	848	0.86	0.1274	0.00	0.0000	0.00	0.00	0.00	0.0000	0.1274
65.71	995	903	0.92	0.1317	0.00	0.0000	0.00	0.00	0.00	0.0000	0.1317

Orifice 1	
Diameter	250 mm
Elevation	64.66 m
Orifice Constant	0.63
Orifice Centroid	64.79 m

Rectangular C Equation
y=(a+bx)/(1+cx+dx^2)

a	-1.04E+04
b	3.42E+06
c	2.13E+06
d	-2.35E+05

Elevation (m)	Outflow (m3/sec)	Storage (m3)	Storage (ha - m)
64.80	0	0	0.0000
64.95	0.056	143.72047	0.0144
65.10	0.077	295.51342	0.0296
65.25	0.093	450.82287	0.0451
65.40	0.107	603.46815	0.0603
65.55	0.120	752.21999	0.0752
65.71	0.132	903.24553	0.0903

Year	Pre	STM CBMH10 ICD	Rooftop	Uncontrolled	Total Post	Total Storage
2	0.27	0.07	0.01	0.08	0.14	356.60
5	0.37	0.08	0.02	0.11	0.18	490.29
10	0.44	0.09	0.02	0.13	0.21	578.57
25	0.57	0.10	0.02	0.17	0.26	763.32
50	0.69	0.11	0.02	0.21	0.30	938.04
100	0.80	0.12	0.02	0.24	0.34	1086.24
100+20%	0.80	0.13	0.02	0.29	0.40	1313.14

WARE MALCOMB
architecture | planning | interiors
graphics | civil engineering

Date: September 6, 2023
Revision No.:
Project No.: OTW21-0002
Designed By: N.I.
Checked By: D.N.

Proposed Industrial Building
2760-2770 Sheffield Road
Ottawa, ON K1B 3V8

Table 10 - Hydrograph - 2-Year

Controlled Release from Site - Pavement P-5 to P-7, P-9 to P-15 and P-25 to P-26

2 Year Post Development Flow	0.483	m3/sec
Storm Duration	25	min

Pond Rating Curve

Elevation (m)	Outflow (m3/sec)	Storage (ha - m)	Storage (m3)
64.80	0	0.000	0
64.95	0.056	0.014	144
65.10	0.077	0.030	296
65.25	0.093	0.045	451
65.40	0.107	0.060	603
65.55	0.120	0.075	752
65.71	0.132	0.090	903

Hydrograph Data

Minute	In Flow (m3/sec)	Out Flow (m3/sec)	Del_Storage (m3)	Cumulative Storage (m3)
(1)	(2)	(4)	(5)	(6)
0	0.00	0.000	0	0
1	0.05	0.000	3	3
2	0.10	0.001	6	0
3	0.14	0.000	9	9
4	0.19	0.002	11	20
5	0.24	0.006	14	35
6	0.29	0.009	17	51
7	0.34	0.014	19	71
8	0.39	0.019	22	93
9	0.43	0.025	25	117
10	0.48	0.032	27	144
11	0.43	0.056	23	167
12	0.39	0.059	20	187
13	0.34	0.062	17	203
14	0.29	0.064	14	217
15	0.24	0.066	11	227
16	0.19	0.067	8	235
17	0.14	0.068	5	240
18	0.10	0.069	2	241
19	0.05	0.069	-1	240
20	0.00	0.069	-4	236
22	0.00	0.069	-8	228
24	0.00	0.067	-8	220
26	0.00	0.066	-8	212
28	0.00	0.065	-8	204
30	0.00	0.064	-8	196
32	0.00	0.063	-8	189
34	0.00	0.062	-7	181
36	0.00	0.061	-7	174
38	0.00	0.060	-7	167
40	0.00	0.059	-7	160
42	0.00	0.058	-7	153
44	0.00	0.057	-7	146
46	0.00	0.056	-7	139
48	0.00	0.038	-5	135
50	0.00	0.036	-4	130
55	0.00	0.035	-11	120
60	0.00	0.032	-10	110
65	0.00	0.030	-9	101
70	0.00	0.027	-8	93
75	0.00	0.025	-8	85
80	0.00	0.023	-7	78
85	0.00	0.021	-6	72
90	0.00	0.019	-6	66
95	0.00	0.018	-5	61
100	0.00	0.016	-5	56

Controlled Release from Site - Rooftop (P-8)

2 Year Post Development Flow	0.215	m3/sec
Storm Duration	20	min

Pond Rating Curve

Elevation (m)	Outflow (m3/sec)	Storage (ha - m)	Storage (m3)
100.00	0	0.000	0
100.03	0.006	0.002	21
100.06	0.012	0.008	84
100.09	0.018	0.019	188
100.12	0.021	0.034	335
100.15	0.024	0.052	523

Hydrograph Data

Minute	In Flow (m3/sec)	Out Flow (m3/sec)	Del_Storage (m3)	Cumulative Storage (m3)
(1)	(2)	(4)	(5)	(6)
0	0.00	0.000	0	0
1	0.02	0.000	1	1
2	0.04	0.000	3	0
3	0.06	0.000	4	4
4	0.09	0.001	5	9
5	0.11	0.003	6	15
6	0.13	0.004	7	23
7	0.15	0.006	9	32
8	0.17	0.007	10	41
9	0.19	0.008	11	52
10	0.21	0.009	12	65
11	0.19	0.010	11	76
12	0.17	0.011	10	85
13	0.15	0.012	8	94
14	0.13	0.013	7	101
15	0.11	0.013	6	106
16	0.09	0.013	4	111
17	0.06	0.014	3	114
18	0.04	0.014	2	115
19	0.02	0.014	0	116
20	0.00	0.014	-1	115
22	0.00	0.014	-2	113
24	0.00	0.014	-2	112
26	0.00	0.014	-2	110
28	0.00	0.013	-2	108
30	0.00	0.013	-2	107
32	0.00	0.013	-2	105
34	0.00	0.013	-2	104
36	0.00	0.013	-2	102
38	0.00	0.013	-2	100
40	0.00	0.013	-2	99
42	0.00	0.013	-2	97
44	0.00	0.013	-2	96
46	0.00	0.013	-2	94
48	0.00	0.013	-2	93
50	0.00	0.013	-2	91
55	0.00	0.012	-4	88
60	0.00	0.012	-4	84
65	0.00	0.012	-4	80
70	0.00	0.012	-3	77
75	0.00	0.011	-3	73
80	0.00	0.011	-3	70
85	0.00	0.011	-3	67
90	0.00	0.010	-3	64
95	0.00	0.010	-3	61
100	0.00	0.010	-3	58

Uncontrolled Release from Site - (P-1 to P-4)

2 Year Post Development Flow	0.083	m3/sec
Storm Duration	25	min

Hydrograph Data

Minute	In Flow (m3/sec)	Out Flow (m3/sec)
(1)	(2)	(4)
0	0.000	0.000
1	0.008	0.008
2	0.017	0.017
3	0.025	0.025
4	0.033	0.033
5	0.042	0.042
6	0.050	0.050
7	0.058	0.058
8	0.067	0.067
9	0.075	0.075
10	0.083	0.083
11	0.075	0.075
12	0.067	0.067
13	0.058	0.058
14	0.050	0.050
15	0.042	0.042
16	0.033	0.033
17	0.025	0.025
18	0.017	0.017
19	0.008	0.008
20	0.000	0.000
22	0.000	0.000
24	0.000	0.000
26	0.000	0.000
28	0.000	0.000
30	0.000	0.000
32	0.000	0.000
34	0.000	0.000
36	0.000	0.000
38	0.000	0.000
40	0.000	0.000
42	0.000	0.000
44	0.000	0.000
46	0.000	0.000
48	0.000	0.000
50	0.000	0.000
55	0.000	0.000
60	0.000	0.000
65	0.000	0.000
70	0.000	0.000
75	0.000	0.000
80	0.000	0.000
85	0.000	0.000
90	0.000	0.000
95	0.000	0.000
100	0.000	0.000

Total Release From Site

Minute	Out Flow (m3/sec)	Total Storage (m3/sec)
(1)	(2)	(2)
0	0.000	0.000
1	0.008	4.181
2	0.018	0.560
3	0.025	13.095
4	0.037	29.604
5	0.050	50.022
6	0.064	74.284
7	0.078	102.350
8	0.093	134.232
9	0.108	169.881
10	0.124	209.250
11	0.141	242.928
12	0.137	272.170
13	0.132	297.015
14	0.126	317.511
15	0.120	333.687
16	0.114	345.575
17	0.107	353.203
18	0.099	356.600
19	0.091	355.797
20	0.083	350.820
22	0.082	340.944
24	0.081	331.216
26	0.080	321.635
28	0.079	312.200
30	0.077	302.906
32	0.076	293.753
34	0.075	284.737
36	0.074	275.858
38	0.073	267.111
40	0.072	258.496
42	0.071	250.010
44	0.070	241.652
46	0.069	233.418
48	0.050	227.393
50	0.049	221.526
55	0.048	207.236
60	0.045	193.868
65	0.042	181.350
70	0.039	169.656
75	0.036	158.728
80	0.034	148.507
85	0.032	138.943
90	0.030	129.986
95	0.028	121.592
100	0.026	113.721

WARE MALCOMB
architecture | planning | interiors
graphics | civil engineering

Date: September 6, 2023
Revision No.:
Project No.: OTW21-0002
Designed By: N.I.
Checked By: D.N.

Proposed Industrial Building
2760-2770 Sheffield Road
Ottawa, ON K1B 3V8

Table 11 - Hydrograph - 5-Year

Controlled Release from Site - Pavement P-5 to P-7, P-9 to P-15 and P-25 to P-26

5 Year Post Development Flow	0.655	m3/sec
Storm Duration	25	min

Pond Rating Curve

Elevation (m)	Outflow (m3/sec)	Storage (ha - m)	Storage (m3)
64.80	0	0.000	0
64.95	0.056	0.014	144
65.10	0.077	0.030	296
65.25	0.093	0.045	451
65.40	0.107	0.060	603
65.55	0.120	0.075	752
65.71	0.132	0.090	903

Hydrograph Data

Minute	In Flow (m3/sec)	Out Flow (m3/sec)	Del_Storage (m3)	Cumulative Storage (m3)
(1)	(2)	(4)	(5)	(6)
0	0.00	0.000	0	0
1	0.07	0.000	4	4
2	0.13	0.001	8	0
3	0.20	0.000	12	12
4	0.26	0.003	16	28
5	0.33	0.007	19	47
6	0.39	0.013	23	70
7	0.46	0.019	26	96
8	0.52	0.026	30	126
9	0.59	0.034	33	159
10	0.65	0.058	36	195
11	0.59	0.063	32	227
12	0.52	0.067	27	254
13	0.46	0.071	23	277
14	0.39	0.074	19	296
15	0.33	0.077	15	311
16	0.26	0.079	11	322
17	0.20	0.080	7	329
18	0.13	0.080	3	332
19	0.07	0.081	-1	332
20	0.00	0.081	-5	327
22	0.00	0.080	-10	317
24	0.00	0.079	-10	308
26	0.00	0.078	-9	298
28	0.00	0.077	-9	289
30	0.00	0.076	-9	280
32	0.00	0.075	-9	271
34	0.00	0.073	-9	262
36	0.00	0.072	-9	253
38	0.00	0.071	-9	245
40	0.00	0.070	-8	236
42	0.00	0.069	-8	228
44	0.00	0.067	-8	220
46	0.00	0.066	-8	212
48	0.00	0.065	-8	204
50	0.00	0.064	-8	197
55	0.00	0.063	-19	178
60	0.00	0.060	-18	160
65	0.00	0.058	-17	142
70	0.00	0.038	-12	131
75	0.00	0.035	-11	120
80	0.00	0.032	-10	110
85	0.00	0.030	-9	101
90	0.00	0.027	-8	93
95	0.00	0.025	-8	86
100	0.00	0.023	-7	79

Controlled Release from Site - Rooftop (P-8)

5 Year Post Development Flow	0.290	m3/sec
Storm Duration	20	min

Pond Rating Curve

Elevation (m)	Outflow (m3/sec)	Storage (ha - m)	Storage (m3)
100.00	0	0.000	0
100.03	0.006	0.002	21
100.06	0.012	0.008	84
100.09	0.018	0.019	188
100.12	0.021	0.034	335
100.15	0.024	0.052	523

Hydrograph Data

Minute	In Flow (m3/sec)	Out Flow (m3/sec)	Del_Storage (m3)	Cumulative Storage (m3)
(1)	(2)	(4)	(5)	(6)
0	0.00	0.000	0	0
1	0.03	0.000	2	2
2	0.06	0.000	3	0
3	0.09	0.000	5	6
4	0.12	0.002	7	12
5	0.15	0.004	9	21
6	0.17	0.006	10	31
7	0.20	0.007	12	43
8	0.23	0.008	13	56
9	0.26	0.009	15	71
10	0.29	0.011	17	88
11	0.26	0.012	15	103
12	0.23	0.013	13	116
13	0.20	0.014	11	128
14	0.17	0.014	10	137
15	0.15	0.015	8	145
16	0.12	0.015	6	151
17	0.09	0.016	4	155
18	0.06	0.016	3	158
19	0.03	0.016	1	159
20	0.00	0.016	-1	158
22	0.00	0.016	-2	156
24	0.00	0.016	-2	154
26	0.00	0.016	-2	152
28	0.00	0.016	-2	150
30	0.00	0.016	-2	148
32	0.00	0.016	-2	146
34	0.00	0.016	-2	144
36	0.00	0.015	-2	142
38	0.00	0.015	-2	141
40	0.00	0.015	-2	139
42	0.00	0.015	-2	137
44	0.00	0.015	-2	135
46	0.00	0.015	-2	133
48	0.00	0.015	-2	132
50	0.00	0.015	-2	130
55	0.00	0.015	-4	125
60	0.00	0.014	-4	121
65	0.00	0.014	-4	117
70	0.00	0.014	-4	113
75	0.00	0.014	-4	109
80	0.00	0.013	-4	105
85	0.00	0.013	-4	101
90	0.00	0.013	-4	97
95	0.00	0.013	-4	93
100	0.00	0.013	-4	89

Uncontrolled Release from Site - (P-1 to P-4)

5 Year Post Development Flow	0.311	m3/sec
Storm Duration	25	min

Hydrograph Data

Minute	In Flow (m3/sec)	Out Flow (m3/sec)
(1)	(2)	(4)
0	0.000	0.000
1	0.011	0.011
2	0.023	0.023
3	0.034	0.034
4	0.045	0.045
5	0.056	0.056
6	0.068	0.068
7	0.079	0.079
8	0.090	0.090
9	0.102	0.102
10	0.113	0.113
11	0.102	0.102
12	0.090	0.090
13	0.079	0.079
14	0.068	0.068
15	0.056	0.056
16	0.045	0.045
17	0.034	0.034
18	0.023	0.023
19	0.011	0.011
20	0.000	0.000
22	0.000	0.000
24	0.000	0.000
26	0.000	0.000
28	0.000	0.000
30	0.000	0.000
32	0.000	0.000
34	0.000	0.000
36	0.000	0.000
38	0.000	0.000
40	0.000	0.000
42	0.000	0.000
44	0.000	0.000
46	0.000	0.000
48	0.000	0.000
50	0.000	0.000
55	0.000	0.000
60	0.000	0.000
65	0.000	0.000
70	0.000	0.000
75	0.000	0.000
80	0.000	0.000
85	0.000	0.000
90	0.000	0.000
95	0.000	0.000
100	0.000	0.000

Total Release From Site

Minute	Out Flow (m3/sec)	Total Storage (m3/sec)
(1)	(2)	(2)
0	0.000	0.000
1	0.011	5.672
2	0.024	0.560
3	0.034	17.568
4	0.050	39.968
5	0.067	67.670
6	0.086	100.587
7	0.105	138.748
8	0.124	182.086
9	0.145	230.534
10	0.182	283.142
11	0.177	329.691
12	0.171	370.251
13	0.164	404.863
14	0.157	433.568
15	0.148	456.409
16	0.139	473.455
17	0.129	484.738
18	0.119	490.288
19	0.108	490.138
20	0.097	484.319
22	0.096	472.749
24	0.095	461.316
26	0.094	450.017
28	0.093	438.851
30	0.092	427.843
32	0.090	417.001
34	0.089	406.322
36	0.088	395.804
38	0.086	385.444
40	0.085	375.240
42	0.084	365.189
44	0.083	355.289
46	0.081	345.537
48	0.080	335.931
50	0.079	326.469
55	0.078	303.167
60	0.075	280.734
65	0.072	259.136
70	0.052	243.428
75	0.049	228.729
80	0.046	214.960
85	0.043	202.051
90	0.040	189.936
95	0.038	178.556
100	0.036	167.855

WARE MALCOMB
architecture | planning | interiors
graphics | civil engineering

Date: September 6, 2023
Revision No.:
Project No.: OTW21-0002
Designed By: N.I.
Checked By: D.N.

Proposed Industrial Building
2760-2770 Sheffield Road
Ottawa, ON K1B 3V8

Table 12 - Hydrograph - 10-Year

Controlled Release from Site - Pavement P-5 to P-7, P-9 to P-15 and P-25 to P-26

10 Year Post Development Flow	0.763	m3/sec
Storm Duration	22	min

Pond Rating Curve

Elevation (m)	Outflow (m3/sec)	Storage (ha - m)	Storage (m3)
64.80	0	0.000	0
64.95	0.056	0.014	144
65.10	0.077	0.030	296
65.25	0.093	0.045	451
65.40	0.107	0.060	603
65.55	0.120	0.075	752
65.71	0.132	0.090	903

Hydrograph Data

Minute	In Flow	Out Flow	Del_Storage	Cumulative Storage
	(m3/sec)	(m3/sec)	(m3)	(m3)
(1)	(2)	(4)	(5)	(6)
0	0.00	0.000	0	0
1	0.08	0.000	5	5
2	0.15	0.001	9	0
3	0.23	0.000	14	14
4	0.31	0.004	18	32
5	0.38	0.009	23	55
6	0.46	0.015	27	82
7	0.54	0.022	31	112
8	0.61	0.030	35	148
9	0.69	0.056	38	186
10	0.77	0.062	42	228
11	0.69	0.067	37	265
12	0.61	0.073	32	298
13	0.54	0.077	28	326
14	0.46	0.080	23	348
15	0.38	0.083	18	366
16	0.31	0.084	13	380
17	0.23	0.086	9	388
18	0.15	0.087	4	392
19	0.08	0.087	-1	392
20	0.00	0.087	-5	387
22	0.00	0.087	-10	376
24	0.00	0.085	-10	366
26	0.00	0.084	-10	356
28	0.00	0.083	-10	346
30	0.00	0.082	-10	336
32	0.00	0.081	-10	326
34	0.00	0.080	-10	317
36	0.00	0.079	-9	307
38	0.00	0.078	-9	298
40	0.00	0.077	-9	288
42	0.00	0.076	-9	279
44	0.00	0.075	-9	270
46	0.00	0.073	-9	262
48	0.00	0.072	-9	253
50	0.00	0.071	-9	244
55	0.00	0.070	-21	224
60	0.00	0.067	-20	203
65	0.00	0.064	-19	184
70	0.00	0.061	-18	166
75	0.00	0.059	-18	148
80	0.00	0.056	-17	131
85	0.00	0.036	-11	121
90	0.00	0.033	-10	111
95	0.00	0.030	-9	102
100	0.00	0.028	-8	94

Controlled Release from Site - Rooftop (P-8)

10 Year Post Development Flow	0.340	m3/sec
Storm Duration	20	min

Pond Rating Curve

Elevation (m)	Outflow (m3/sec)	Storage (ha - m)	Storage (m3)
100.00	0	0.000	0
100.03	0.006	0.002	21
100.06	0.012	0.008	84
100.09	0.018	0.019	188
100.12	0.021	0.034	335
100.15	0.024	0.052	523

Hydrograph Data

Minute	In Flow	Out Flow	Del_Storage	Cumulative Storage
	(m3/sec)	(m3/sec)	(m3)	(m3)
(1)	(2)	(4)	(5)	(6)
0	0.00	0.000	0	0
1	0.03	0.000	2	2
2	0.07	0.001	4	0
3	0.10	0.000	6	6
4	0.14	0.002	8	14
5	0.17	0.004	10	24
6	0.20	0.006	12	36
7	0.24	0.007	14	50
8	0.27	0.009	16	66
9	0.31	0.010	18	84
10	0.34	0.012	20	103
11	0.31	0.013	18	121
12	0.27	0.014	15	137
13	0.24	0.015	13	150
14	0.20	0.016	11	161
15	0.17	0.016	9	170
16	0.14	0.017	7	178
17	0.10	0.017	5	183
18	0.07	0.018	3	186
19	0.03	0.018	1	187
20	0.00	0.018	-1	186
22	0.00	0.018	-2	184
24	0.00	0.018	-2	181
26	0.00	0.018	-2	179
28	0.00	0.017	-2	177
30	0.00	0.017	-2	175
32	0.00	0.017	-2	173
34	0.00	0.017	-2	171
36	0.00	0.017	-2	169
38	0.00	0.017	-2	167
40	0.00	0.017	-2	165
42	0.00	0.017	-2	163
44	0.00	0.017	-2	161
46	0.00	0.016	-2	159
48	0.00	0.016	-2	157
50	0.00	0.016	-2	155
55	0.00	0.016	-5	150
60	0.00	0.016	-5	146
65	0.00	0.016	-5	141
70	0.00	0.015	-5	136
75	0.00	0.015	-4	132
80	0.00	0.015	-4	127
85	0.00	0.014	-4	123
90	0.00	0.014	-4	119
95	0.00	0.014	-4	115
100	0.00	0.014	-4	110

Uncontrolled Release from Site - (P-1 to P-4)

10 Year Post Development Flow	0.113	m3/sec
Storm Duration	22	min

Hydrograph Data

Minute	In Flow	Out Flow
	(m3/sec)	(m3/sec)
(1)	(2)	(4)
0	0.000	0.000
1	0.013	0.013
2	0.026	0.026
3	0.040	0.040
4	0.053	0.053
5	0.066	0.066
6	0.079	0.079
7	0.093	0.093
8	0.106	0.106
9	0.119	0.119
10	0.132	0.132
11	0.119	0.119
12	0.106	0.106
13	0.093	0.093
14	0.079	0.079
15	0.066	0.066
16	0.053	0.053
17	0.040	0.040
18	0.026	0.026
19	0.013	0.013
20	0.000	0.000
22	0.000	0.000
24	0.000	0.000
26	0.000	0.000
28	0.000	0.000
30	0.000	0.000
32	0.000	0.000
34	0.000	0.000
36	0.000	0.000
38	0.000	0.000
40	0.000	0.000
42	0.000	0.000
44	0.000	0.000
46	0.000	0.000
48	0.000	0.000
50	0.000	0.000
55	0.000	0.000
60	0.000	0.000
65	0.000	0.000
70	0.000	0.000
75	0.000	0.000
80	0.000	0.000
85	0.000	0.000
90	0.000	0.000
95	0.000	0.000
100	0.000	0.000

Total Release From Site

Minute	Out Flow	Total Storage
	(m3/sec)	(m3/sec)
(1)	(2)	(2)
0	0.000	0.000
1	0.013	6.650
2	0.028	0.560
3	0.040	20.500
4	0.059	46.759
5	0.079	79.235
6	0.101	117.864
7	0.122	162.641
8	0.145	213.486
9	0.186	269.345
10	0.206	331.432
11	0.200	386.446
12	0.193	434.436
13	0.185	475.455
14	0.175	509.602
15	0.165	536.915
16	0.154	557.431
17	0.143	571.187
18	0.131	578.221
19	0.118	578.569
20	0.105	572.268
22	0.104	559.740
24	0.103	547.360
26	0.102	535.126
28	0.101	523.035
30	0.100	511.086
32	0.098	499.278
34	0.097	487.608
36	0.096	476.075
38	0.095	464.677
40	0.094	453.413
42	0.093	442.310
44	0.091	431.372
46	0.090	420.599
48	0.088	409.987
50	0.087	399.534
55	0.086	373.792
60	0.083	349.011
65	0.080	325.152
70	0.077	302.180
75	0.074	280.058
80	0.071	258.753
85	0.050	243.749
90	0.047	229.684
95	0.044	216.486
100	0.041	204.092

WARE MALCOMB
architecture | planning | interiors
graphics | civil engineering

Date: September 6, 2023
Revision No.:
Project No.: OTW21-0002
Designed By: N.I.
Checked By: D.N.

Proposed Industrial Building
2760-2770 Sheffield Road
Ottawa, ON K1B 3V8

Table 13 - Hydrograph - 25-Year

Controlled Release from Site - Pavement P-5 to P-7, P-9 to P-15 and P-25 to P-26

25 Year Post Development Flow	1.001	m3/sec
Storm Duration	22	min

Pond Rating Curve

Elevation (m)	Outflow (m3/sec)	Storage (ha - m)	Storage (m3)
64.80	0	0.000	0
64.95	0.056	0.014	144
65.10	0.077	0.030	296
65.25	0.093	0.045	451
65.40	0.107	0.060	603
65.55	0.120	0.075	752
65.71	0.132	0.090	903

Hydrograph Data

Minute	In Flow	Out Flow	Del_Storage	Cumulative Storage
	(m3/sec)	(m3/sec)	(m3)	(m3)
(1)	(2)	(4)	(5)	(6)
0	0.00	0.000	0	0
1	0.10	0.000	6	6
2	0.20	0.002	12	0
3	0.30	0.000	18	18
4	0.40	0.005	24	42
5	0.50	0.011	29	71
6	0.60	0.019	35	106
7	0.70	0.029	40	146
8	0.80	0.056	45	191
9	0.90	0.062	50	241
10	1.00	0.069	56	297
11	0.90	0.077	49	347
12	0.80	0.082	43	390
13	0.70	0.087	37	427
14	0.60	0.091	31	457
15	0.50	0.094	24	482
16	0.40	0.096	18	500
17	0.30	0.098	12	512
18	0.20	0.099	6	518
19	0.10	0.100	0	518
20	0.00	0.100	-6	512
22	0.00	0.099	-12	500
24	0.00	0.098	-12	488
26	0.00	0.097	-12	477
28	0.00	0.096	-11	465
30	0.00	0.095	-11	454
32	0.00	0.094	-11	443
34	0.00	0.093	-11	432
36	0.00	0.091	-11	421
38	0.00	0.090	-11	410
40	0.00	0.089	-11	399
42	0.00	0.088	-11	389
44	0.00	0.087	-10	378
46	0.00	0.086	-10	368
48	0.00	0.085	-10	358
50	0.00	0.084	-10	348
55	0.00	0.082	-25	323
60	0.00	0.080	-24	299
65	0.00	0.077	-23	276
70	0.00	0.074	-22	254
75	0.00	0.071	-21	232
80	0.00	0.068	-20	212
85	0.00	0.065	-20	192
90	0.00	0.062	-19	174
95	0.00	0.060	-18	156
100	0.00	0.057	-17	138

Controlled Release from Site - Rooftop (P-8)

25 Year Post Development Flow	0.444	m3/sec
Storm Duration	20	min

Pond Rating Curve

Elevation (m)	Outflow (m3/sec)	Storage (ha - m)	Storage (m3)
100.00	0	0.000	0
100.03	0.006	0.002	21
100.06	0.012	0.008	84
100.09	0.018	0.019	188
100.12	0.021	0.034	335
100.15	0.024	0.052	523

Hydrograph Data

Minute	In Flow	Out Flow	Del_Storage	Cumulative Storage
	(m3/sec)	(m3/sec)	(m3)	(m3)
(1)	(2)	(4)	(5)	(6)
0	0.00	0.000	0	0
1	0.04	0.000	3	3
2	0.09	0.001	5	0
3	0.13	0.000	8	8
4	0.18	0.002	11	19
5	0.22	0.005	13	32
6	0.27	0.007	16	47
7	0.31	0.009	18	65
8	0.35	0.010	21	86
9	0.40	0.012	23	109
10	0.44	0.013	26	135
11	0.40	0.015	23	158
12	0.35	0.016	20	179
13	0.31	0.017	18	196
14	0.27	0.018	15	211
15	0.22	0.018	12	223
16	0.18	0.019	10	233
17	0.13	0.019	7	240
18	0.09	0.019	4	244
19	0.04	0.019	2	245
20	0.00	0.019	-1	244
22	0.00	0.019	-2	242
24	0.00	0.019	-2	240
26	0.00	0.019	-2	237
28	0.00	0.019	-2	235
30	0.00	0.019	-2	233
32	0.00	0.019	-2	230
34	0.00	0.019	-2	228
36	0.00	0.019	-2	226
38	0.00	0.019	-2	224
40	0.00	0.019	-2	221
42	0.00	0.019	-2	219
44	0.00	0.019	-2	217
46	0.00	0.019	-2	215
48	0.00	0.019	-2	213
50	0.00	0.018	-2	210
55	0.00	0.018	-6	205
60	0.00	0.018	-5	199
65	0.00	0.018	-5	194
70	0.00	0.018	-5	188
75	0.00	0.018	-5	183
80	0.00	0.018	-5	178
85	0.00	0.017	-5	172
90	0.00	0.017	-5	167
95	0.00	0.017	-5	162
100	0.00	0.016	-5	157

Uncontrolled Release from Site - (P-1 to P-4)

25 Year Post Development Flow	0.113	m3/sec
Storm Duration	22	min

Hydrograph Data

Minute	In Flow	Out Flow
	(m3/sec)	(m3/sec)
(1)	(2)	(4)
0	0.000	0.000
1	0.017	0.017
2	0.035	0.035
3	0.052	0.052
4	0.069	0.069
5	0.086	0.086
6	0.104	0.104
7	0.121	0.121
8	0.138	0.138
9	0.155	0.155
10	0.173	0.173
11	0.155	0.155
12	0.138	0.138
13	0.121	0.121
14	0.104	0.104
15	0.086	0.086
16	0.069	0.069
17	0.052	0.052
18	0.035	0.035
19	0.017	0.017
20	0.000	0.000
22	0.000	0.000
24	0.000	0.000
26	0.000	0.000
28	0.000	0.000
30	0.000	0.000
32	0.000	0.000
34	0.000	0.000
36	0.000	0.000
38	0.000	0.000
40	0.000	0.000
42	0.000	0.000
44	0.000	0.000
46	0.000	0.000
48	0.000	0.000
50	0.000	0.000
55	0.000	0.000
60	0.000	0.000
65	0.000	0.000
70	0.000	0.000
75	0.000	0.000
80	0.000	0.000
85	0.000	0.000
90	0.000	0.000
95	0.000	0.000
100	0.000	0.000

Total Release From Site

Minute	Out Flow	Total Storage
	(m3/sec)	(m3/sec)
(1)	(2)	(2)
0	0.000	0.000
1	0.017	8.665
2	0.037	0.560
3	0.052	26.546
4	0.076	60.768
5	0.103	103.090
6	0.130	153.501
7	0.158	211.924
8	0.204	277.268
9	0.230	350.790
10	0.255	432.475
11	0.247	504.941
12	0.237	568.347
13	0.225	622.744
14	0.212	668.196
15	0.199	704.775
16	0.184	732.541
17	0.169	751.528
18	0.153	761.776
19	0.136	763.320
20	0.119	756.196
22	0.118	742.018
24	0.117	727.977
26	0.116	714.071
28	0.115	700.298
30	0.114	686.658
32	0.113	673.148
34	0.111	659.782
36	0.110	646.564
38	0.109	633.491
40	0.108	620.561
42	0.107	607.774
44	0.105	595.127
46	0.104	582.618
48	0.103	570.246
50	0.102	558.009
55	0.101	527.751
60	0.098	498.316
65	0.095	469.679
70	0.092	442.013
75	0.089	415.314
80	0.086	389.602
85	0.083	364.838
90	0.080	340.985
95	0.077	318.005
100	0.074	295.866

WARE MALCOMB
architecture | planning | interiors
graphics | civil engineering

Date: September 6, 2023
Revision No.:
Project No.: OTW21-0002
Designed By: N.I.
Checked By: D.N.

Proposed Industrial Building
2760-2770 Sheffield Road
Ottawa, ON K1B 3V8

Table 14 - Hydrograph - 50-Year

Controlled Release from Site - Pavement P-5 to P-7, P-9 to P-15 and P-25 to P-26

50 Year Post Development Flow	1.218	m3/sec
Storm Duration	22	min

Pond Rating Curve

Elevation (m)	Outflow (m3/sec)	Storage (ha - m)	Storage (m3)
64.80	0	0.000	0
64.95	0.056	0.014	144
65.10	0.077	0.030	296
65.25	0.093	0.045	451
65.40	0.107	0.060	603
65.55	0.120	0.075	752
65.71	0.132	0.090	903

Hydrograph Data

Minute	In Flow	Out Flow	Del_Storage	Cumulative Storage
	(m3/sec)	(m3/sec)	(m3)	(m3)
(1)	(2)	(4)	(5)	(6)
0	0.00	0.000	0	0
1	0.12	0.000	7	7
2	0.24	0.002	14	0
3	0.37	0.000	22	22
4	0.49	0.006	29	51
5	0.61	0.014	36	87
6	0.73	0.023	42	129
7	0.85	0.035	49	178
8	0.97	0.060	55	233
9	1.10	0.068	62	295
10	1.22	0.077	68	363
11	1.10	0.084	61	424
12	0.97	0.091	53	477
13	0.85	0.096	45	522
14	0.73	0.100	38	560
15	0.61	0.103	30	591
16	0.49	0.106	23	614
17	0.37	0.108	15	629
18	0.24	0.110	8	637
19	0.12	0.110	1	638
20	0.00	0.110	-7	631
22	0.00	0.110	-13	618
24	0.00	0.109	-13	605
26	0.00	0.108	-13	592
28	0.00	0.106	-13	579
30	0.00	0.105	-13	567
32	0.00	0.104	-12	554
34	0.00	0.103	-12	542
36	0.00	0.102	-12	530
38	0.00	0.101	-12	517
40	0.00	0.100	-12	505
42	0.00	0.098	-12	494
44	0.00	0.097	-12	482
46	0.00	0.096	-12	470
48	0.00	0.095	-11	459
50	0.00	0.094	-11	448
55	0.00	0.093	-28	420
60	0.00	0.090	-27	393
65	0.00	0.087	-26	367
70	0.00	0.084	-25	341
75	0.00	0.082	-25	317
80	0.00	0.079	-24	293
85	0.00	0.077	-23	270
90	0.00	0.073	-22	248
95	0.00	0.070	-21	227
100	0.00	0.067	-20	207

Controlled Release from Site - Rooftop (P-8)

50 Year Post Development Flow	0.548	m3/sec
Storm Duration	20	min

Pond Rating Curve

Elevation (m)	Outflow (m3/sec)	Storage (ha - m)	Storage (m3)
100.00	0	0.000	0
100.03	0.006	0.002	21
100.06	0.012	0.008	84
100.09	0.018	0.019	188
100.12	0.021	0.034	335
100.15	0.024	0.052	523

Hydrograph Data

Minute	In Flow	Out Flow	Del_Storage	Cumulative Storage
	(m3/sec)	(m3/sec)	(m3)	(m3)
(1)	(2)	(4)	(5)	(6)
0	0.00	0.000	0	0
1	0.05	0.000	3	3
2	0.11	0.001	6	0
3	0.16	0.000	10	10
4	0.22	0.003	13	23
5	0.27	0.006	16	39
6	0.32	0.008	19	58
7	0.38	0.009	22	80
8	0.43	0.012	25	105
9	0.49	0.013	28	133
10	0.54	0.015	32	165
11	0.49	0.017	28	193
12	0.43	0.018	25	218
13	0.38	0.019	22	239
14	0.32	0.019	18	258
15	0.27	0.019	15	273
16	0.22	0.020	12	285
17	0.16	0.020	9	293
18	0.11	0.020	5	298
19	0.05	0.020	2	300
20	0.00	0.020	-1	299
22	0.00	0.020	-2	297
24	0.00	0.020	-2	294
26	0.00	0.020	-2	292
28	0.00	0.020	-2	289
30	0.00	0.020	-2	287
32	0.00	0.020	-2	285
34	0.00	0.020	-2	282
36	0.00	0.020	-2	280
38	0.00	0.020	-2	278
40	0.00	0.020	-2	275
42	0.00	0.020	-2	273
44	0.00	0.020	-2	270
46	0.00	0.020	-2	268
48	0.00	0.020	-2	266
50	0.00	0.020	-2	263
55	0.00	0.020	-6	257
60	0.00	0.019	-6	252
65	0.00	0.019	-6	246
70	0.00	0.019	-6	240
75	0.00	0.019	-6	234
80	0.00	0.019	-6	229
85	0.00	0.019	-6	223
90	0.00	0.019	-6	217
95	0.00	0.019	-6	212
100	0.00	0.018	-6	206

Uncontrolled Release from Site - (P-1 to P-4)

50 Year Post Development Flow	0.218	m3/sec
Storm Duration	22	min

Hydrograph Data

Minute	In Flow	Out Flow
	(m3/sec)	(m3/sec)
(1)	(2)	(4)
0	0.000	0.000
1	0.021	0.021
2	0.042	0.042
3	0.063	0.063
4	0.084	0.084
5	0.105	0.105
6	0.126	0.126
7	0.147	0.147
8	0.168	0.168
9	0.189	0.189
10	0.210	0.210
11	0.189	0.189
12	0.168	0.168
13	0.147	0.147
14	0.126	0.126
15	0.105	0.105
16	0.084	0.084
17	0.063	0.063
18	0.042	0.042
19	0.021	0.021
20	0.000	0.000
22	0.000	0.000
24	0.000	0.000
26	0.000	0.000
28	0.000	0.000
30	0.000	0.000
32	0.000	0.000
34	0.000	0.000
36	0.000	0.000
38	0.000	0.000
40	0.000	0.000
42	0.000	0.000
44	0.000	0.000
46	0.000	0.000
48	0.000	0.000
50	0.000	0.000
55	0.000	0.000
60	0.000	0.000
65	0.000	0.000
70	0.000	0.000
75	0.000	0.000
80	0.000	0.000
85	0.000	0.000
90	0.000	0.000
95	0.000	0.000
100	0.000	0.000

Total Release From Site

Minute	Out Flow	Total Storage
	(m3/sec)	(m3/sec)
(1)	(2)	(2)
0	0.000	0.000
1	0.021	10.549
2	0.045	0.560
3	0.063	32.197
4	0.093	73.861
5	0.125	125.407
6	0.157	186.832
7	0.191	258.008
8	0.240	338.075
9	0.270	428.134
10	0.302	528.127
11	0.290	617.024
12	0.277	694.898
13	0.261	761.877
14	0.245	818.030
15	0.228	863.403
16	0.210	898.042
17	0.191	921.997
18	0.172	935.315
19	0.151	938.037
20	0.131	930.205
22	0.130	914.609
24	0.129	899.151
26	0.128	883.829
28	0.126	868.654
30	0.125	853.625
32	0.124	838.741
34	0.123	824.001
36	0.122	809.403
38	0.120	794.945
40	0.119	780.625
42	0.118	766.444
44	0.117	752.398
46	0.116	738.487
48	0.115	724.708
50	0.114	711.062
55	0.113	677.285
60	0.109	644.435
65	0.107	612.484
70	0.104	581.403
75	0.101	551.167
80	0.098	521.749
85	0.095	493.149
90	0.092	465.547
95	0.089	438.903
100	0.086	413.177

WARE MALCOMB
architecture | planning | interiors
graphics | civil engineering

Date: September 6, 2023
Revision No.:
Project No.: OTW21-0002
Designed By: N.I.
Checked By: D.N.

Proposed Industrial Building
2760-2770 Sheffield Road
Ottawa, ON K1B 3V8

Table 15 - Hydrograph - 100-Year

Controlled Release from Site - Pavement P-5 to P-7, P-9 to P-15 and P-25 to P-26

100 Year Post Development Flow	1.403	m3/sec
Storm Duration	25	min

Pond Rating Curve

Elevation (m)	Outflow (m3/sec)	Storage (ha - m)	Storage (m3)
64.80	0	0.000	0
64.95	0.056	0.014	144
65.10	0.077	0.030	296
65.25	0.093	0.045	451
65.40	0.107	0.060	603
65.55	0.120	0.075	752
65.71	0.132	0.090	903

Hydrograph Data

Minute	In Flow (m3/sec)	Out Flow (m3/sec)	Del_Storage (m3)	Cumulative Storage (m3)
(1)	(2)	(4)	(5)	(6)
0	0.00	0.000	0	0
1	0.14	0.000	8	8
2	0.28	0.002	17	0
3	0.42	0.000	25	26
4	0.56	0.007	33	59
5	0.70	0.016	41	100
6	0.84	0.027	49	149
7	0.98	0.056	56	204
8	1.12	0.064	63	268
9	1.26	0.073	71	339
10	1.40	0.082	79	419
11	1.26	0.090	70	489
12	1.12	0.097	62	550
13	0.98	0.103	53	603
14	0.84	0.107	44	647
15	0.70	0.111	35	683
16	0.56	0.114	27	710
17	0.42	0.116	18	728
18	0.28	0.118	10	738
19	0.14	0.119	1	739
20	0.00	0.119	-7	732
22	0.00	0.118	-14	718
24	0.00	0.117	-14	704
26	0.00	0.116	-14	690
28	0.00	0.115	-14	676
30	0.00	0.113	-14	662
32	0.00	0.112	-13	649
34	0.00	0.111	-13	635
36	0.00	0.110	-13	622
38	0.00	0.109	-13	609
40	0.00	0.108	-13	596
42	0.00	0.107	-13	583
44	0.00	0.106	-13	571
46	0.00	0.104	-13	558
48	0.00	0.103	-12	546
50	0.00	0.102	-12	534
55	0.00	0.101	-30	503
60	0.00	0.098	-29	474
65	0.00	0.096	-29	445
70	0.00	0.093	-28	417
75	0.00	0.090	-27	390
80	0.00	0.087	-26	364
85	0.00	0.084	-25	339
90	0.00	0.082	-24	315
95	0.00	0.079	-24	291
100	0.00	0.076	-23	268

Controlled Release from Site - Rooftop (P-8)

100 Year Post Development Flow	0.627	m3/sec
Storm Duration	20	min

Pond Rating Curve

Elevation (m)	Outflow (m3/sec)	Storage (ha - m)	Storage (m3)
100.00	0	0.000	0
100.03	0.006	0.002	21
100.06	0.012	0.008	84
100.09	0.018	0.019	188
100.12	0.021	0.034	335
100.15	0.024	0.052	523

Hydrograph Data

Minute	In Flow (m3/sec)	Out Flow (m3/sec)	Del_Storage (m3)	Cumulative Storage (m3)
(1)	(2)	(4)	(5)	(6)
0	0.00	0.000	0	0
1	0.06	0.000	4	4
2	0.12	0.001	7	0
3	0.19	0.000	11	11
4	0.25	0.003	15	26
5	0.31	0.006	18	44
6	0.37	0.008	22	66
7	0.44	0.010	26	92
8	0.50	0.012	29	121
9	0.56	0.014	33	154
10	0.62	0.016	36	190
11	0.56	0.018	33	223
12	0.50	0.019	29	251
13	0.44	0.019	25	276
14	0.37	0.020	21	298
15	0.31	0.020	17	315
16	0.25	0.021	14	329
17	0.19	0.021	10	339
18	0.12	0.021	6	345
19	0.06	0.021	2	347
20	0.00	0.021	-1	346
22	0.00	0.021	-3	344
24	0.00	0.021	-3	341
26	0.00	0.021	-3	338
28	0.00	0.021	-3	336
30	0.00	0.021	-3	333
32	0.00	0.021	-3	331
34	0.00	0.021	-3	328
36	0.00	0.021	-3	326
38	0.00	0.021	-2	323
40	0.00	0.021	-2	321
42	0.00	0.021	-2	318
44	0.00	0.021	-2	316
46	0.00	0.021	-2	313
48	0.00	0.021	-2	311
50	0.00	0.020	-2	309
55	0.00	0.020	-6	302
60	0.00	0.020	-6	296
65	0.00	0.020	-6	290
70	0.00	0.020	-6	284
75	0.00	0.020	-6	278
80	0.00	0.020	-6	272
85	0.00	0.020	-6	266
90	0.00	0.020	-6	261
95	0.00	0.019	-6	255
100	0.00	0.019	-6	249

Uncontrolled Release from Site - (P-1 to P-4)

100 Year Post Development Flow	0.242	m3/sec
Storm Duration	25	min

Hydrograph Data

Minute	In Flow (m3/sec)	Out Flow (m3/sec)
(1)	(2)	(4)
0	0.000	0.000
1	0.024	0.024
2	0.048	0.048
3	0.073	0.073
4	0.097	0.097
5	0.121	0.121
6	0.145	0.145
7	0.169	0.169
8	0.194	0.194
9	0.218	0.218
10	0.242	0.242
11	0.218	0.218
12	0.194	0.194
13	0.169	0.169
14	0.145	0.145
15	0.121	0.121
16	0.097	0.097
17	0.073	0.073
18	0.048	0.048
19	0.024	0.024
20	0.000	0.000
22	0.000	0.000
24	0.000	0.000
26	0.000	0.000
28	0.000	0.000
30	0.000	0.000
32	0.000	0.000
34	0.000	0.000
36	0.000	0.000
38	0.000	0.000
40	0.000	0.000
42	0.000	0.000
44	0.000	0.000
46	0.000	0.000
48	0.000	0.000
50	0.000	0.000
55	0.000	0.000
60	0.000	0.000
65	0.000	0.000
70	0.000	0.000
75	0.000	0.000
80	0.000	0.000
85	0.000	0.000
90	0.000	0.000
95	0.000	0.000
100	0.000	0.000

Total Release From Site

Minute	Out Flow (m3/sec)	Total Storage (m3/sec)
(1)	(2)	(2)
0	0.000	0.000
1	0.024	12.151
2	0.052	0.560
3	0.073	37.005
4	0.107	84.999
5	0.143	144.412
6	0.180	215.205
7	0.236	296.264
8	0.270	388.880
9	0.305	493.014
10	0.339	608.676
11	0.326	711.560
12	0.309	801.836
13	0.291	879.586
14	0.272	944.864
15	0.252	997.744
16	0.231	1038.274
17	0.210	1066.502
18	0.187	1082.476
19	0.164	1086.243
20	0.140	1077.851
22	0.139	1061.140
24	0.138	1044.575
26	0.137	1028.155
28	0.136	1011.879
30	0.134	995.745
32	0.133	979.753
34	0.132	963.902
36	0.131	948.190
38	0.130	932.616
40	0.129	917.179
42	0.127	901.885
44	0.126	886.739
46	0.125	871.738
48	0.124	856.881
50	0.123	842.166
55	0.121	805.733
60	0.119	770.172
65	0.116	735.460
70	0.113	701.599
75	0.110	668.664
80	0.107	636.626
85	0.104	605.458
90	0.101	575.132
95	0.098	545.623
100	0.096	516.952

WARE MALCOMB
architecture | planning | interiors
graphics | civil engineering

Date: September 6, 2023
Revision No.:
Project No.: OTW21-0002
Designed By: N.I.
Checked By: D.N.

Proposed Industrial Building
2760-2770 Sheffield Road
Ottawa, ON K1B 3V8

Table 16 - Hydrograph - 100-Year + 20%

Controlled Release from Site - Pavement P-5 to P-7, P-9 to P-15 and P-25 to P-26

100 Year Post Development Flow	1.68	m3/sec
Storm Duration	25	min

Pond Rating Curve

Elevation (m)	Outflow (m3/sec)	Storage (ha - m)	Storage (m3)
64.80	0	0.000	0
64.95	0.056	0.014	144
65.10	0.077	0.030	296
65.25	0.093	0.045	451
65.40	0.107	0.060	603
65.55	0.120	0.075	752
65.71	0.132	0.090	903

Hydrograph Data

Minute	In Flow	Out Flow	Del_Storage	Cumulative Storage
	(m3/sec)	(m3/sec)	(m3)	(m3)
(1)	(2)	(4)	(5)	(6)
0	0.00	0.000	0	0
1	0.17	0.000	10	10
2	0.34	0.003	20	0
3	0.51	0.000	30	31
4	0.67	0.008	40	70
5	0.84	0.019	49	120
6	1.01	0.032	59	179
7	1.18	0.061	67	246
8	1.35	0.070	77	322
9	1.52	0.080	86	408
10	1.68	0.089	96	504
11	1.52	0.098	85	589
12	1.35	0.106	74	664
13	1.18	0.112	64	728
14	1.01	0.118	54	781
15	0.84	0.122	43	824
16	0.67	0.126	33	857
17	0.51	0.128	23	880
18	0.34	0.130	12	892
19	0.17	0.131	2	894
20	0.00	0.131	-8	887
22	0.00	0.130	-16	871
24	0.00	0.129	-16	855
26	0.00	0.128	-15	840
28	0.00	0.127	-15	825
30	0.00	0.126	-15	810
32	0.00	0.124	-15	795
34	0.00	0.123	-15	780
36	0.00	0.122	-15	765
38	0.00	0.121	-15	751
40	0.00	0.120	-14	737
42	0.00	0.119	-14	722
44	0.00	0.117	-14	708
46	0.00	0.116	-14	694
48	0.00	0.115	-14	681
50	0.00	0.114	-14	667
55	0.00	0.113	-34	633
60	0.00	0.110	-33	600
65	0.00	0.107	-32	568
70	0.00	0.104	-31	537
75	0.00	0.101	-30	506
80	0.00	0.099	-30	-6 477
85	0.00	0.096	-29	448
90	0.00	0.093	-28	420
95	0.00	0.090	-27	393
100	0.00	0.087	-26	367

Controlled Release from Site - Rooftop (P-8)

100 Year Post Development Flow	0.74	m3/sec
Storm Duration	20	min

Pond Rating Curve

Elevation (m)	Outflow (m3/sec)	Storage (ha - m)	Storage (m3)
100.00	0	0.000	0
100.03	0.006	0.002	21
100.06	0.012	0.008	84
100.09	0.018	0.019	188
100.12	0.021	0.034	335
100.15	0.024	0.052	523

Hydrograph Data

Minute	In Flow	Out Flow	Del_Storage	Cumulative Storage
	(m3/sec)	(m3/sec)	(m3)	(m3)
(1)	(2)	(4)	(5)	(6)
0	0.00	0.000	0	0
1	0.07	0.000	4	4
2	0.15	0.001	9	0
3	0.22	0.000	13	14
4	0.30	0.004	18	31
5	0.37	0.007	22	53
6	0.45	0.009	26	80
7	0.52	0.012	31	110
8	0.60	0.014	35	145
9	0.67	0.016	39	185
10	0.75	0.018	44	229
11	0.67	0.019	39	268
12	0.60	0.020	35	302
13	0.52	0.020	30	332
14	0.45	0.021	26	358
15	0.37	0.021	21	379
16	0.30	0.022	17	396
17	0.22	0.022	12	408
18	0.15	0.022	8	416
19	0.07	0.022	3	419
20	0.00	0.022	-1	417
22	0.00	0.022	-3	415
24	0.00	0.022	-3	412
26	0.00	0.022	-3	409
28	0.00	0.022	-3	407
30	0.00	0.022	-3	404
32	0.00	0.022	-3	401
34	0.00	0.022	-3	399
36	0.00	0.022	-3	396
38	0.00	0.022	-3	394
40	0.00	0.022	-3	391
42	0.00	0.022	-3	388
44	0.00	0.022	-3	386
46	0.00	0.022	-3	383
48	0.00	0.022	-3	380
50	0.00	0.022	-3	378
55	0.00	0.022	-6	371
60	0.00	0.022	-6	365
65	0.00	0.021	-6	358
70	0.00	0.021	-6	352
75	0.00	0.021	-6	346
80	0.00	0.021	-6	339
85	0.00	0.021	-6	333
90	0.00	0.021	-6	327
95	0.00	0.021	-6	320
100	0.00	0.021	-6	314

Uncontrolled Release from Site - (P-1 to P-4)

100 Year Post Development Flow	0.29	m3/sec
Storm Duration	25	min

Hydrograph Data

Minute	In Flow	Out Flow
	(m3/sec)	(m3/sec)
(1)	(2)	(4)
0	0.000	0.000
1	0.029	0.029
2	0.058	0.058
3	0.087	0.087
4	0.116	0.116
5	0.145	0.145
6	0.174	0.174
7	0.203	0.203
8	0.232	0.232
9	0.261	0.261
10	0.290	0.290
11	0.261	0.261
12	0.232	0.232
13	0.203	0.203
14	0.174	0.174
15	0.145	0.145
16	0.116	0.116
17	0.087	0.087
18	0.058	0.058
19	0.029	0.029
20	0.000	0.000
22	0.000	0.000
24	0.000	0.000
26	0.000	0.000
28	0.000	0.000
30	0.000	0.000
32	0.000	0.000
34	0.000	0.000
36	0.000	0.000
38	0.000	0.000
40	0.000	0.000
42	0.000	0.000
44	0.000	0.000
46	0.000	0.000
48	0.000	0.000
50	0.000	0.000
55	0.000	0.000
60	0.000	0.000
65	0.000	0.000
70	0.000	0.000
75	0.000	0.000
80	0.000	0.000
85	0.000	0.000
90	0.000	0.000
95	0.000	0.000
100	0.000	0.000

Total Release From Site

Minute	Out Flow	Total Storage
	(m3/sec)	(m3/sec)
(1)	(2)	(2)
0	0.000	0.000
1	0.029	14.582
2	0.062	0.560
3	0.087	44.296
4	0.128	101.891
5	0.171	173.236
6	0.216	258.236
7	0.275	355.980
8	0.316	467.629
9	0.357	593.150
10	0.397	732.567
11	0.378	856.776
12	0.358	965.887
13	0.336	1059.995
14	0.313	1139.164
15	0.289	1203.467
16	0.263	1252.962
17	0.237	1287.705
18	0.210	1307.747
19	0.182	1313.141
20	0.153	1303.940
22	0.153	1285.614
24	0.151	1267.443
26	0.150	1249.423
28	0.149	1231.554
30	0.148	1213.834
32	0.146	1196.263
34	0.145	1178.837
36	0.144	1161.557
38	0.143	1144.421
40	0.142	1127.429
42	0.140	1110.584
44	0.139	1093.887
46	0.138	1077.335
48	0.137	1060.928
50	0.136	1044.664
55	0.134	1004.356
60	0.131	964.924
65	0.129	926.356
70	0.126	888.703
75	0.123	851.941
80	0.120	816.046
85	0.117	780.996
90	0.114	746.783
95	0.111	713.500
100	0.108	681.118

Stormceptor®

FORTERRA

Stormceptor® EF Sizing Report

STORMCEPTOR®
ESTIMATED NET ANNUAL SEDIMENT (TSS) LOAD REDUCTION

03/28/2023

Province:	Ontario
City:	Ottawa
Nearest Rainfall Station:	OTTAWA CDA RCS
Climate Station Id:	6105978
Years of Rainfall Data:	20
Site Name:	2760 Sheffield Rd.
Drainage Area (ha):	2.6673
Runoff Coefficient 'c':	0.84
Particle Size Distribution:	Fine
Target TSS Removal (%):	80.0
Required Water Quality Runoff Volume Capture (%):	90.0
Oil / Fuel Spill Risk Site?	Yes
Upstream Flow Control?	Yes
Upstream Orifice Control Flow Rate to Stormceptor (L/s):	144
Peak Conveyance (maximum) Flow Rate (L/s):	144

Project Name:	2760 Sheffield Rd.
Project Number:	OTW21-0002
Designer Name:	Brandon O'Leary
Designer Company:	Forterra
Designer Email:	brandon.oleary@forterrabp.com
Designer Phone:	905-630-0359
EOR Name:	Noam Itzkovsky
EOR Company:	Ware Malcomb
EOR Email:	nitzkovsky@waremalcomb.com
EOR Phone:	416-890-6229

Net Annual Sediment (TSS) Load Reduction Sizing Summary

Stormceptor Model	TSS Removal Provided (%)
EFO4	56
EFO6	72
EFO8	81
EFO10	87
EFO12	92

Recommended Stormceptor EFO Model: EFO8

Estimated Net Annual Sediment (TSS) Load Reduction (%): 81

Water Quality Runoff Volume Capture (%): > 90

imbrium

DRAWING NOT TO BE USED FOR CONSTRUCTION

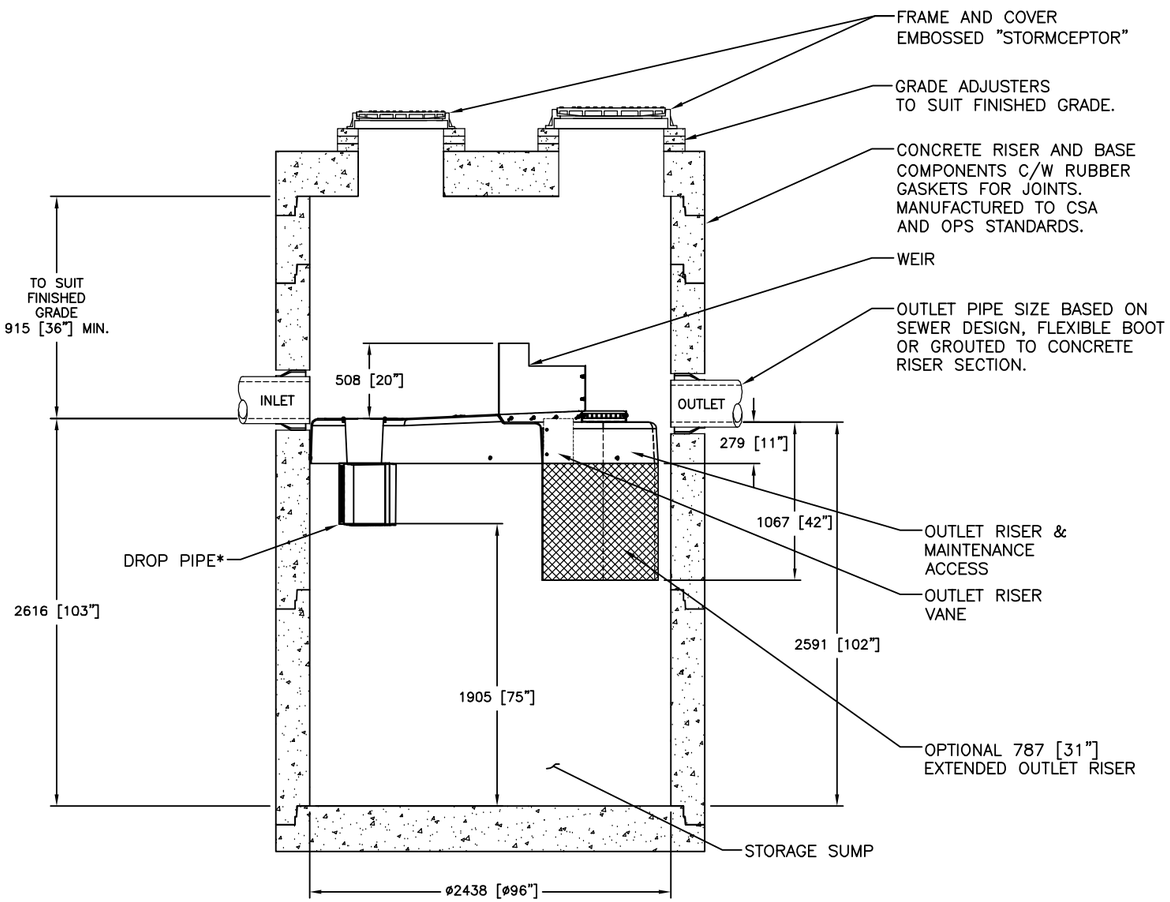

SECTION VIEW

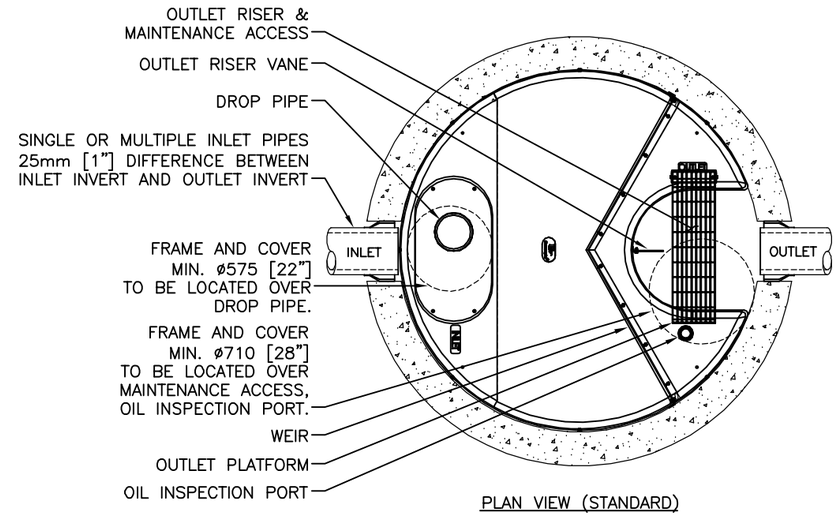

PLAN VIEW (STANDARD)

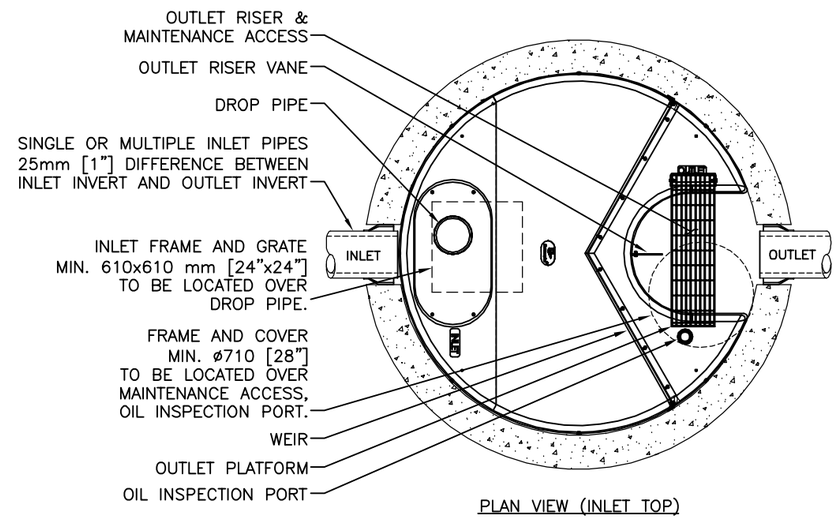

PLAN VIEW (INLET TOP)

GENERAL NOTES:

* MAXIMUM SURFACE LOADING RATE (SLR) INTO LOWER CHAMBER THROUGH DROP PIPE IS 1135 L/min/m^2 (27.9 gpm/ft^2) FOR STORMCEPTOR EF8 AND 535 L/min/m^2 (13.1 gpm/ft^2) FOR STORMCEPTOR EFO8 (OIL CAPTURE CONFIGURATION).

1. ALL DIMENSIONS INDICATED ARE IN MILLIMETERS (INCHES) UNLESS OTHERWISE SPECIFIED.
2. STORMCEPTOR STRUCTURE INLET AND OUTLET PIPE SIZE AND ORIENTATION SHOWN FOR INFORMATIONAL PURPOSES ONLY.
3. UNLESS OTHERWISE NOTED, BYPASS INFRASTRUCTURE, SUCH AS ALL UPSTREAM DIVERSION STRUCTURES, CONNECTING STRUCTURES, OR PIPE CONDUITS CONNECTING TO COMPLETE THE STORMCEPTOR SYSTEM SHALL BE PROVIDED AND ADDRESSED SEPARATELY.
4. DRAWING FOR INFORMATION PURPOSES ONLY. REFER TO ENGINEER'S SITE/UTILITY PLAN FOR STRUCTURE ORIENTATION.
5. NO PRODUCT SUBSTITUTIONS SHALL BE ACCEPTED UNLESS SUBMITTED 10 DAYS PRIOR TO PROJECT BID DATE, OR AS DIRECTED BY THE ENGINEER OF RECORD.

INSTALLATION NOTES

A. ANY SUB-BASE, BACKFILL DEPTH, AND/OR ANTI-FLOTATION PROVISIONS ARE SITE-SPECIFIC DESIGN CONSIDERATIONS AND SHALL BE SPECIFIED BY ENGINEER OF RECORD.
B. CONTRACTOR TO PROVIDE EQUIPMENT WITH SUFFICIENT LIFTING AND REACH CAPACITY TO LIFT AND SET THE STRUCTURE (LIFTING CLUTCHES PROVIDED)
C. CONTRACTOR WILL INSTALL AND LEVEL THE STRUCTURE, SEALING THE JOINTS, LINE ENTRY AND EXIT POINTS (NON-SHRINK GROUT WITH APPROVED WATERSTOP OR FLEXIBLE BOOT)
D. CONTRACTOR TO TAKE APPROPRIATE MEASURES TO PROTECT THE DEVICE FROM CONSTRUCTION-RELATED EROSION RUNOFF.
E. DEVICE ACTIVATION, BY CONTRACTOR, SHALL OCCUR ONLY AFTER SITE HAS BEEN STABILIZED AND THE STORMCEPTOR UNIT IS CLEAN AND FREE OF DEBRIS.

FOR SITE SPECIFIC DRAWINGS PLEASE CONTACT YOUR LOCAL STORMCEPTOR REPRESENTATIVE. SITE SPECIFIC DRAWINGS ARE BASED ON THE BEST AVAILABLE INFORMATION AT THE TIME. SOME FIELD REVISIONS TO THE SYSTEM LOCATION OR CONNECTION PIPING MAY BE NECESSARY BASED ON AVAILABLE SPACE OR SITE CONFIGURATION REVISIONS. ELEVATIONS SHOULD BE MAINTAINED EXCEPT WHERE NOTED ON BYPASS STRUCTURE (IF REQUIRED).

STANDARD DETAIL
NOT FOR CONSTRUCTION

SITE SPECIFIC DATA REQUIREMENTS

STORMCEPTOR MODEL	EFO8				
STRUCTURE ID					*
HYDROCARBON STORAGE REQ'D (L)					*
WATER QUALITY FLOW RATE (L/s)					*
PEAK FLOW RATE (L/s)					*
RETURN PERIOD OF PEAK FLOW (yrs)					*
DRAINAGE AREA (HA)					*
DRAINAGE AREA IMPERVIOUSNESS (%)					*
PIPE DATA:	I.E.	MAT'L	DIA	SLOPE %	HGL
INLET #1	*	*	*	*	*
INLET #2	*	*	*	*	*
OUTLET	*	*	*	*	*

* PER ENGINEER OF RECORD

The design and information shown on this drawing is provided as a service to the project owner, engineer and contractor by Imbrium Systems ("Imbrium"). Neither this drawing, nor any part thereof, may be used, reproduced or modified in any manner without the prior written consent of Imbrium. Failure to comply is done at the user's own risk and Imbrium expressly disclaims any liability or responsibility for such use.

If discrepancies between the supplied information upon which the drawing is based and actual field conditions are encountered as site work progresses, these discrepancies must be reported to Imbrium immediately for re-evaluation of the design. Imbrium accepts no liability for designs based on missing, incomplete or inaccurate information supplied by others.

MARK	DATE	REVISION DESCRIPTION	BY
####	####	####	####
####	####	####	####
####	####	####	####
1	6/8/18	OUTLET PLATFORM	JSK
0	5/26/17	INITIAL RELEASE	JSK

Stormceptor® EF

SCALE = NTS

imbrium®
7037 RIDGE ROAD, SUITE 320, HANOVER, MD 21076
USA 866-279-8529 CA 800-565-4501 INTL +1-410-969-6500

THE STORMCEPTOR® MODEL IS PROTECTED BY AT LEAST ONE OF THE FOLLOWING PATENTS: Ca. 2,325,646 - 2,476,277 - 2,523,803 - 2,528,084 - 2,529,139 Chinese Patent No. ZL 99814770.7 - ZL 200680000325.7 - ZL 200680029286.7 - ZL 200680029287.1 European Patent No. 1 073 875 (Ref. 7) - Patent No. 1 382 080 (Ref. 7) Japanese Patent No. 4 494 427 (Ref. 7) - 4 538 121 (Ref. 7) - 4 709 345 (Ref. 7) United States Patents: 6,861,561 - 7,625,487 - 7,772,116 - 8,039,726 - 8,221,615 - 8,371,446

DATE: 10/13/2017	
DESIGNED: JSK	DRAWN: JSK
CHECKED: BSF	APPROVED: *
PROJECT No.: EFO8	SEQUENCE No.: *
SHEET: 1 OF 1	

I:\IMBRIUM\PRODUCTS\STORMCEPTOR EF\40 DRAWINGS & DETAILS\STANDARD DETAILS\EFO STANDARD DETAILS\EFO8-DETAIL.DWG 10/19/2018 9:54 AM

THIRD-PARTY TESTING AND VERIFICATION

►**Stormceptor® EF and Stormceptor® EFO** are the latest evolutions in the Stormceptor® oil-grit separator (OGS) technology series, and are designed to remove a wide variety of pollutants from stormwater and snowmelt runoff. These technologies have been third-party tested in accordance with the Canadian ETV **Procedure for Laboratory Testing of Oil-Grit Separators** and performance has been third-party verified in accordance with the **ISO 14034 Environmental Technology Verification (ETV)** protocol.

PERFORMANCE

►**Stormceptor® EF and EFO** remove stormwater pollutants through gravity separation and floatation, and feature a patent-pending design that generates positive removal of total suspended solids (TSS) throughout each storm event, including high-intensity storms. Captured pollutants include sediment, free oils, and sediment-bound pollutants such as nutrients, heavy metals, and petroleum hydrocarbons. Stormceptor is sized to remove a high level of TSS from the frequent rainfall events that contribute the vast majority of annual runoff volume and pollutant load. The technology incorporates an internal bypass to convey excessive stormwater flows from high-intensity storms through the device without resuspension and washout (scour) of previously captured pollutants. Proper routine maintenance ensures high pollutant removal performance and protection of downstream waterways.

PARTICLE SIZE DISTRIBUTION (PSD)

►The **Canadian ETV PSD** shown in the table below was used, or in part, for this sizing. This is the identical PSD that is referenced in the Canadian ETV ***Procedure for Laboratory Testing of Oil-Grit Separators*** for both sediment removal testing and scour testing. The Canadian ETV PSD contains a wide range of particle sizes in the sand and silt fractions, and is considered reasonably representative of the particle size fractions found in typical urban stormwater runoff.

Particle Size (µm)	Percent Less Than	Particle Size Fraction (µm)	Percent
1000	100	500-1000	5
500	95	250-500	5
250	90	150-250	15
150	75	100-150	15
100	60	75-100	10
75	50	50-75	5
50	45	20-50	10
20	35	8-20	15
8	20	5-8	10
5	10	2-5	5
2	5	<2	5

Upstream Flow Controlled Results

Rainfall Intensity (mm / hr)	Percent Rainfall Volume (%)	Cumulative Rainfall Volume (%)	Flow Rate (L/s)	Flow Rate (L/min)	Surface Loading Rate (L/min/m²)	Removal Efficiency (%)	Incremental Removal (%)	Cumulative Removal (%)
0.5	8.6	8.6	3.11	187.0	40.0	100	8.6	8.6
1	20.3	29.0	6.23	374.0	80.0	98	20.0	28.6
2	16.2	45.2	12.46	747.0	159.0	88	14.3	43.0
3	12.0	57.2	18.69	1121.0	239.0	82	9.8	52.8
4	8.4	65.6	24.91	1495.0	318.0	78	6.6	59.3
5	5.9	71.6	31.14	1869.0	398.0	74	4.4	63.8
6	4.6	76.2	37.37	2242.0	477.0	71	3.3	67.0
7	3.1	79.3	43.60	2616.0	557.0	67	2.1	69.1
8	2.7	82.0	49.83	2990.0	636.0	64	1.8	70.8
9	3.3	85.3	56.06	3363.0	716.0	64	2.1	73.0
10	2.3	87.6	62.29	3737.0	795.0	63	1.5	74.4
11	1.6	89.2	68.52	4111.0	875.0	63	1.0	75.4
12	1.3	90.5	74.74	4485.0	954.0	62	0.8	76.2
13	1.7	92.2	80.97	4858.0	1034.0	61	1.0	77.3
14	1.2	93.5	87.20	5232.0	1113.0	59	0.7	78.0
15	1.2	94.6	93.43	5606.0	1193.0	57	0.7	78.6
16	0.7	95.3	99.66	5980.0	1272.0	55	0.4	79.0
17	0.7	96.1	105.89	6353.0	1352.0	53	0.4	79.4
18	0.4	96.5	112.12	6727.0	1431.0	51	0.2	79.6
19	0.4	96.9	118.34	7101.0	1511.0	48	0.2	79.8
20	0.2	97.1	124.57	7474.0	1590.0	46	0.1	79.9
21	0.5	97.5	130.80	7848.0	1670.0	44	0.2	80.1
22	0.2	97.8	137.03	8222.0	1749.0	42	0.1	80.2
23	2.2	100.0	143.26	8596.0	1829.0	40	0.9	81.1
24	0.0	100.0	144.00	8640.0	1838.0	40	0.0	81.1
25	0.0	100.0	144.00	8640.0	1838.0	40	0.0	81.1
30	0.0	100.0	144.00	8640.0	1838.0	40	0.0	81.1
35	0.0	100.0	144.00	8640.0	1838.0	40	0.0	81.1
40	0.0	100.0	144.00	8640.0	1838.0	40	0.0	81.1
45	0.0	100.0	144.00	8640.0	1838.0	40	0.0	81.1
Estimated Net Annual Sediment (TSS) Load Reduction =								**81 %**

Climate Station ID: 6105978 *Years of Rainfall Data*: 20

RAINFALL DATA FROM OTTAWA CDA RCS RAINFALL STATION

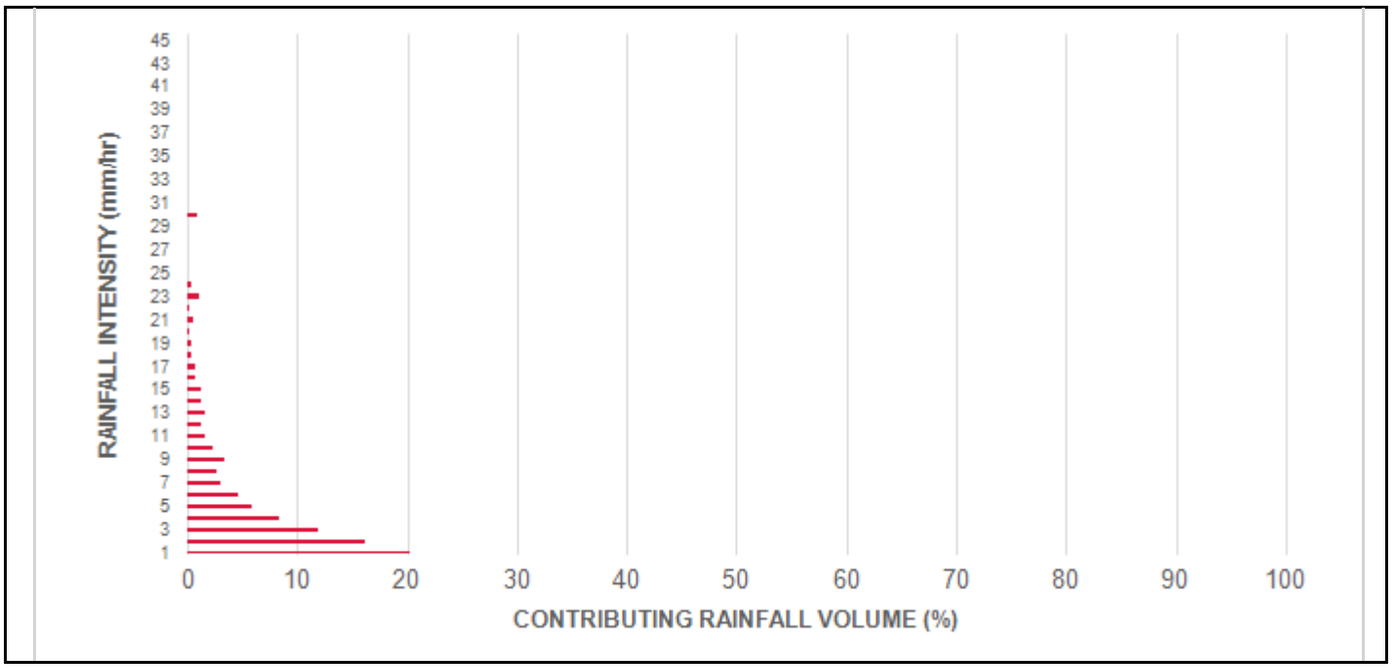

INCREMENTAL AND CUMULATIVE TSS REMOVAL
FOR THE RECOMMENDED STORMCEPTOR® MODEL

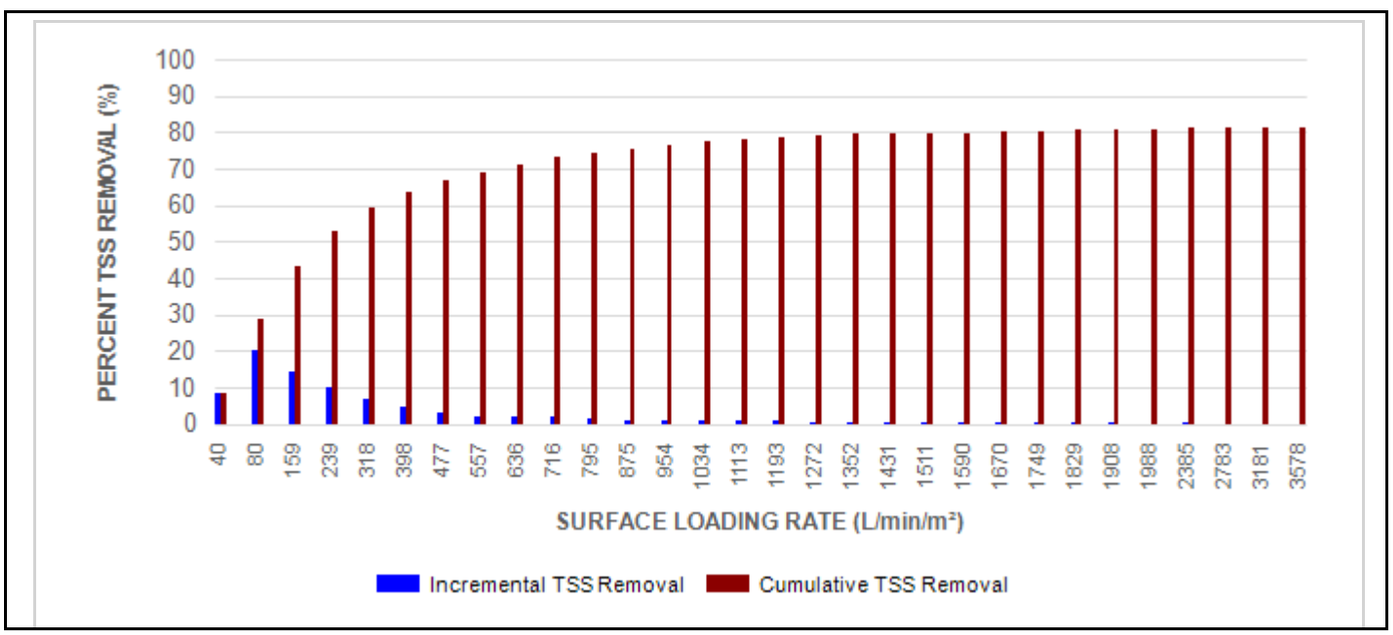

Maximum Pipe Diameter / Peak Conveyance

Stormceptor EF / EFO	Model Diameter		Min Angle Inlet / Outlet Pipes	Max Inlet Pipe Diameter		Max Outlet Pipe Diameter		Peak Conveyance Flow Rate	
	(m)	(ft)		(mm)	(in)	(mm)	(in)	(L/s)	(cfs)
EF4 / EFO4	1.2	4	90	609	24	609	24	425	15
EF6 / EFO6	1.8	6	90	914	36	914	36	990	35
EF8 / EFO8	2.4	8	90	1219	48	1219	48	1700	60
EF10 / EFO10	3.0	10	90	1828	72	1828	72	2830	100
EF12 / EFO12	3.6	12	90	1828	72	1828	72	2830	100

SCOUR PREVENTION AND ONLINE CONFIGURATION

►**Stormceptor® EF and EFO** feature an internal bypass and superior scour prevention technology that have been demonstrated in third-party testing according to the scour testing provisions of the Canadian ETV **Procedure for Laboratory Testing of Oil-Grit Separators**, and the exceptional scour test performance has been third-party verified in accordance with the ISO 14034 ETV protocol. As a result, Stormceptor EF and EFO are approved for online installation, eliminating the need for costly additional bypass structures, piping, and installation expense.

DESIGN FLEXIBILITY

►**Stormceptor® EF** and **EFO** offers design flexibility in one simplified platform, accepting stormwater flow from a single inlet pipe or multiple inlet pipes, and/or surface runoff through an inlet grate. The device can also serve as a junction structure, accommodate a 90-degree inlet-to-outlet bend angle, and can be modified to ensure performance in submerged conditions.

OIL CAPTURE AND RETENTION

►While Stormceptor® EF will capture and retain oil from dry weather spills and low intensity runoff, **Stormceptor® EFO** has demonstrated superior oil capture and greater than 99% oil retention in third-party testing according to the light liquid re-entrainment testing provisions of the Canadian ETV **Procedure for Laboratory Testing of Oil-Grit Separators**. Stormceptor EFO is recommended for sites where oil capture and retention is a requirement.

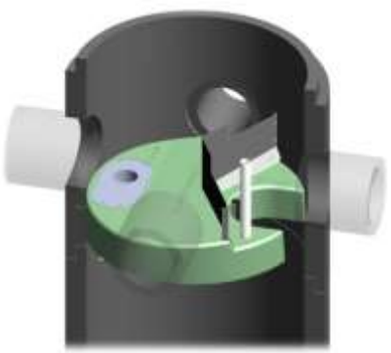

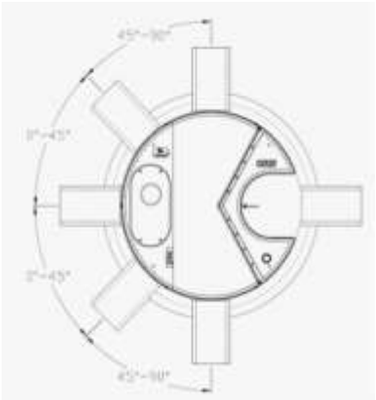

INLET-TO-OUTLET DROP

Elevation differential between inlet and outlet pipe inverts is dictated by the angle at which the inlet pipe(s) enters the unit.

0° - 45° : The inlet pipe is 1-inch (25mm) higher than the outlet pipe.

45° - 90° : The inlet pipe is 2-inches (50mm) higher than the outlet pipe.

HEAD LOSS

The head loss through Stormceptor EF is similar to that of a 60-degree bend structure. The applicable K value for calculating minor losses through the unit is 1.1. For submerged conditions the applicable K value is 3.0.

Pollutant Capacity

Stormceptor EF / EFO	Model Diameter		Depth (Outlet Pipe Invert to Sump Floor)		Oil Volume		Recommended Sediment Maintenance Depth *		Maximum Sediment Volume *		Maximum Sediment Mass **	
	(m)	(ft)	(m)	(ft)	(L)	(Gal)	(mm)	(in)	(L)	(ft^3)	(kg)	(lb)
EF4 / EFO4	1.2	4	1.52	5.0	265	70	203	8	1190	42	1904	5250
EF6 / EFO6	1.8	6	1.93	6.3	610	160	305	12	3470	123	5552	15375
EF8 / EFO8	2.4	8	2.59	8.5	1070	280	610	24	8780	310	14048	38750
EF10 / EFO10	3.0	10	3.25	10.7	1670	440	610	24	17790	628	28464	78500
EF12 / EFO12	3.6	12	3.89	12.8	2475	655	610	24	31220	1103	49952	137875

*Increased sump depth may be added to increase sediment storage capacity

** Average density of wet packed sediment in sump = 1.6 kg/L (100 lb/ft^3)

Feature	Benefit	Feature Appeals To
Patent-pending enhanced flow treatment and scour prevention technology	Superior, verified third-party performance	Regulator, Specifying & Design Engineer
Third-party verified light liquid capture and retention for EFO version	Proven performance for fuel/oil hotspot locations	Regulator, Specifying & Design Engineer, Site Owner
Functions as bend, junction or inlet structure	Design flexibility	Specifying & Design Engineer
Minimal drop between inlet and outlet	Site installation ease	Contractor
Large diameter outlet riser for inspection and maintenance	Easy maintenance access from grade	Maintenance Contractor & Site Owner

STANDARD STORMCEPTOR EF/EFO DRAWINGS

For standard details, please visit http://www.imbriumsystems.com/stormwater-treatment-solutions/stormceptor-ef

STANDARD STORMCEPTOR EF/EFO SPECIFICATION

For specifications, please visit http://www.imbriumsystems.com/stormwater-treatment-solutions/stormceptor-ef

STANDARD PERFORMANCE SPECIFICATION FOR "OIL GRIT SEPARATOR" (OGS) STORMWATER QUALITY TREATMENT DEVICE

PART 1 – GENERAL

1.1 WORK INCLUDED

This section specifies requirements for selecting, sizing, and designing an underground Oil Grit Separator (OGS) device for stormwater quality treatment, with third-party testing results and a Statement of Verification in accordance with ISO 14034 Environmental Management – Environmental Technology Verification (ETV).

1.2 REFERENCE STANDARDS & PROCEDURES

ISO 14034:2016 Environmental management – Environmental technology verification (ETV)

Canadian Environmental Technology Verification (ETV) Program's **Procedure for Laboratory Testing of Oil-Grit Separators**

1.3 SUBMITTALS

1.3.1 All submittals, including sizing reports & shop drawings, shall be submitted upon request with each order to the contractor then forwarded to the Engineer of Record for review and acceptance. Shop drawings shall detail all OGS components, elevations, and sequence of construction.

1.3.2 Alternative devices shall have features identical to or greater than the specified device, including: treatment chamber diameter, treatment chamber wet volume, sediment storage volume, and oil storage volume.

1.3.3 Unless directed otherwise by the Engineer of Record, OGS stormwater quality treatment product substitutions or alternatives submitted within ten days prior to project bid shall not be accepted. All alternatives or substitutions submitted shall be signed and sealed by a local registered Professional Engineer, based on the exact same criteria detailed in Section 3, in entirety, subject to review and approval by the Engineer of Record.

PART 2 – PRODUCTS

2.1 OGS POLLUTANT STORAGE

The OGS device shall include a sump for sediment storage, and a protected volume for the capture and storage of petroleum hydrocarbons and buoyant gross pollutants. The minimum sediment & petroleum hydrocarbon storage capacity shall be as follows:

2.1.1	4 ft (1219 mm) Diameter OGS Units:	1.19 m^3 sediment / 265 L oil
	6 ft (1829 mm) Diameter OGS Units:	3.48 m^3 sediment / 609 L oil
	8 ft (2438 mm) Diameter OGS Units:	8.78 m^3 sediment / 1,071 L oil
	10 ft (3048 mm) Diameter OGS Units:	17.78 m^3 sediment / 1,673 L oil
	12 ft (3657 mm) Diameter OGS Units:	31.23 m^3 sediment / 2,476 L oil

PART 3 – PERFORMANCE & DESIGN

3.1 GENERAL

The OGS stormwater quality treatment device shall be verified in accordance with ISO 14034:2016 Environmental management – Environmental technology verification (ETV). The OGS stormwater quality treatment device shall remove oil, sediment and gross pollutants from stormwater runoff during frequent wet weather events, and retain these pollutants during less frequent high flow wet weather events below the insert within the OGS for later removal during maintenance. The Manufacturer shall have at least ten (10) years of local experience, history and success in engineering design, manufacturing and production and supply of OGS stormwater quality treatment device systems, acceptable to the Engineer of Record.

3.2 SIZING METHODOLOGY

The OGS device shall be engineered, designed and sized to provide stormwater quality treatment based on treating a minimum of 90 percent of the average annual runoff volume and a minimum removal of an annual average 60% of the sediment (TSS) load based on the Particle Size Distribution (PSD) specified in the sizing report for the specified device. Sizing of the OGS shall be determined by use of a minimum ten (10) years of local historical rainfall data provided by Environment Canada. Sizing shall also be determined by use of the sediment removal performance data derived from the ISO 14034 ETV third-party verified laboratory testing data from testing conducted in accordance with the Canadian ETV protocol Procedure for Laboratory Testing of Oil-Grit Separators, as follows:

3.2.1 Sediment removal efficiency for a given surface loading rate and its associated flow rate shall be based on sediment removal efficiency demonstrated at the seven (7) tested surface loading rates specified in the protocol, ranging 40 L/min/m^2 to 1400 L/min/m^2, and as stated in the ISO 14034 ETV Verification Statement for the OGS device.

3.2.2 Sediment removal efficiency for surface loading rates between 40 L/min/m^2 and 1400 L/min/m^2 shall be based on linear interpolation of data between consecutive tested surface loading rates.

3.2.3 Sediment removal efficiency for surface loading rates less than the lowest tested surface loading rate of 40 L/min/m^2 shall be assumed to be identical to the sediment removal efficiency at 40 L/min/m^2. No extrapolation shall be allowed that results in a sediment removal efficiency that is greater than that demonstrated at 40 L/min/m^2.

3.2.4 Sediment removal efficiency for surface loading rates greater than the highest tested surface loading rate of 1400 L/min/m^2 shall assume zero sediment removal for the portion of flow that exceeds 1400 L/min/m^2, and shall be calculated using a simple proportioning formula, with 1400 L/min/m^2 in the numerator and the higher surface loading rate in the denominator, and multiplying the resulting fraction times the sediment removal efficiency at 1400 L/min/m^2.

The OGS device shall also have sufficient annual sediment storage capacity as specified and calculated in Section 2.1.

3.3 CANADIAN ETV or ISO 14034 ETV VERIFICATION OF SCOUR TESTING

The OGS device shall have Canadian ETV or ISO 14034 ETV Verification of third-party scour testing conducted in

accordance with the Canadian ETV Program's **Procedure for Laboratory Testing of Oil-Grit Separators.**

3.3.1 To be acceptable for on-line installation, the OGS device must demonstrate an average scour test effluent concentration less than 10 mg/L at each surface loading rate tested, up to and including 2600 L/min/m^2.

3.4 LIGHT LIQUID RE-ENTRAINMENT SIMULATION TESTING

The OGS device shall have Canadian ETV or ISO 14034 ETV Verification of completed third-party Light Liquid Re-entrainment Simulation Testing in accordance with the Canadian ETV **Program's Procedure for Laboratory Testing of Oil-Grit Separators,** with results reported within the Canadian ETV or ISO 14034 ETV verification. This re-entrainment testing is conducted with the device pre-loaded with low density polyethylene (LDPE) plastic beads as a surrogate for light liquids such as oil and fuel. Testing is conducted on the same OGS unit tested for sediment removal to assess whether light liquids captured after a spill are effectively retained at high flow rates.

3.4.1 For an OGS device to be an acceptable stormwater treatment device on a site where vehicular traffic occurs and the potential for an oil or fuel spill exists, the OGS device must have reported verified performance results of greater than 99% cumulative retention of LDPE plastic beads for the five specified surface loading rates (ranging 200 L/min/m^2 to 2600 L/min/m^2) in accordance with the Light Liquid Re-entrainment Simulation Testing within the Canadian ETV Program's **Procedure for Laboratory Testing of Oil-Grit Separators.** However, an OGS device shall not be allowed if the Light Liquid Re-entrainment Simulation Testing was performed with screening components within the OGS device that are effective at retaining the LDPE plastic beads, but would not be expected to retain light liquids such as oil and fuel.

STANDARD PERFORMANCE SPECIFICATION FOR "OIL GRIT SEPARATOR" (OGS) STORMWATER QUALITY TREAMENT DEVICE

PART 1 – GENERAL

1.1 WORK INCLUDED

This section specifies requirements for selecting, sizing, and designing an underground Oil Grit Separator (OGS) device for stormwater quality treatment, with third-party testing results and a Statement of Verification in accordance with ISO 14034 Environmental Management – Environmental Technology Verification (ETV).

1.2 REFERENCE STANDARDS & PROCEDURES

ISO 14034:2016 Environmental management – Environmental technology verification (ETV)

Canadian Environmental Technology Verification (ETV) Program's **Procedure for Laboratory Testing of Oil-Grit Separators**

1.3 SUBMITTALS

1.3.1 All submittals, including sizing reports & shop drawings, shall be submitted upon request with each order to the contractor then forwarded to the Engineer of Record for review and acceptance. Shop drawings shall detail all OGS components, elevations, and sequence of construction.

1.3.2 Alternative devices shall have features identical to or greater than the specified device, including: treatment chamber diameter, treatment chamber wet volume, sediment storage volume, and oil storage volume.

1.3.3 Unless directed otherwise by the Engineer of Record, OGS stormwater quality treatment product substitutions or alternatives submitted within ten days prior to project bid shall not be accepted. All alternatives or substitutions submitted shall be signed and sealed by a local registered Professional Engineer, based on the exact same criteria detailed in Section 3, in entirety, subject to review and approval by the Engineer of Record.

PART 2 – PRODUCTS

2.1 OGS POLLUTANT STORAGE

The OGS device shall include a sump for sediment storage, and a protected volume for the capture and storage of petroleum hydrocarbons and buoyant gross pollutants. The **minimum** sediment & petroleum hydrocarbon storage capacity shall be as follows:

2.1.1	4ft (1219mm) Diameter OGS Units:	1.19m^3 sediment / 265L oil
	6ft (1829mm) Diameter OGS Units:	3.48m^3 sediment / 609Ll oil
	8ft (2438mm) Diameter OGS Units:	8.78m^3 sediment / 1,071L oil
	10ft (3048mm) Diameter OGS Units:	17.78m^3 sediment / 1,673L oil
	12ft (3657mm) Diameter OGS Units:	31.23m^3 sediment / 2,476L oil

PART 3 – PERFORMANCE & DESIGN

3.1 GENERAL

The OGS stormwater quality treatment device shall be verified in accordance with ISO 14034:2016 Environmental management – Environmental technology verification (ETV). The OGS stormwater quality

treatment device shall remove oil, sediment and gross pollutants from stormwater runoff during frequent wet weather events, and retain these pollutants during less frequent high flow wet weather events below the insert within the OGS for later removal during maintenance. The Manufacturer shall have at least ten (10) years of local experience, history and success in engineering design, manufacturing and production and supply of OGS stormwater quality treatment device systems, acceptable to the Engineer of Record.

3.2 SIZING METHODOLOGY

The OGS device shall be engineered, designed and sized to provide stormwater quality treatment based on treating a minimum of 90 percent of the average annual runoff volume and a minimum removal of an annual average 60% of the sediment (TSS) load based on the Particle Size Distribution (PSD) specified in the sizing report for the specified device. Sizing shall be determined using historical rainfall data and a sediment removal performance curve derived from the actual third-party verified laboratory testing data. The OGS device shall also have sufficient annual sediment storage capacity as specified and calculated in Section 2.1.

3.3 CANADIAN ETV or ISO 14034 ETV VERIFICATION OF SCOUR TESTING

The OGS device shall have Canadian ETV or ISO 14034 ETV Verification of third-party scour testing conducted in accordance with the Canadian ETV Program's **Procedure for Laboratory Testing of Oil-Grit Separators**.

3.3.1 To be acceptable for on-line installation, the OGS device must demonstrate an average scour test effluent concentration less than 10 mg/L at each surface loading rate tested, up to and including 2600 L/min/m^2.

3.4 LIGHT LIQUID RE-ENTRAINMENT SIMULATION TESTING

The OGS device shall have Canadian ETV or ISO 14034 ETV Verification of completed third-party Light Liquid Re-entrainment Simulation Testing in accordance with the Canadian ETV Program's **Procedure for Laboratory Testing of Oil-Grit Separators**, with results reported within the Canadian ETV or ISO 14034 ETV verification. This re-entrainment testing is conducted with the device pre-loaded with low density polyethylene (LDPE) plastic beads as a surrogate for light liquids such as oil and fuel. Testing is conducted on the same OGS unit tested for sediment removal to assess whether light liquids captured after a spill are effectively retained at high flow rates.

3.4.1 For an OGS device to be an acceptable stormwater treatment device on a site where vehicular traffic occurs and the potential for an oil or fuel spill exists, the OGS device must have reported verified performance results of greater than 99% cumulative retention of LDPE plastic beads for the five specified surface loading rates (ranging 200 L/min/m^2 to 2600 L/min/m^2) in accordance with the Light Liquid Re-entrainment Simulation Testing within the Canadian ETV Program's **Procedure for Laboratory Testing of Oil-Grit Separators**. However, an OGS device shall not be allowed if the Light Liquid Re-entrainment Simulation Testing was performed with screening components within the OGS device that are effective at retaining the LDPE plastic beads, but would not be expected to retain light liquids such as oil and fuel.

We’ve got you covered!

Forterra Stormceptor® Products now include a 5 year Quality Assurance Program.

Maintenance costs for Forterra’s industry leading line of Stormceptor® products are already much lower than competitive stormwater quality devices. Now we’ve sweetened the deal by introducing a new Quality Assurance Program that covers maintenance for up to 5 years.

Improving products, improving service.

We’ve recently expanded our already impressive line of Stormceptor® products with the addition of the Stormceptor® EF series – *simply the most cost competitive stormwater quality device on the market*. Now we’re improving our service by taking care of the maintenance on our entire Stormceptor product line for 5 years after installation.

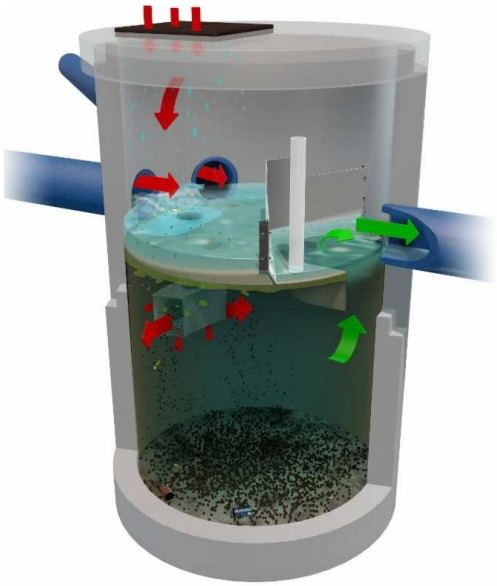

At Forterra, we understand that maintaining a high standard of water quality is crucial to the environment and to our lives. That’s why, for the past 10 years, we’ve included a 2 year maintenance plan with every Stormceptor unit sold. As maintenance becomes more of a focus for many municipalities, we felt it was time to strengthen the program even further. We are now offering a complimentary 5 year maintenance program with every Stormceptor unit to ensure water quality continues to be at its best.

Stormceptor® Quality Assurance Program

Based on initial inspection results, there are two ways to ensure Stormceptor® performance:

First way *(5 years, no cleaning)*

- Six inspections over a 5 year period, with no cleaning required
- First inspection at 6 months, inspections every 12 months thereafter for 5 years
- Oil and sediment levels are documented along with maintenance recommendations, if necessary

Second way *(2.5 years, with cleaning)*

- Initial inspection and one post construction sediment cleaning at 6 months
- Two additional annual inspections, resulting in the unit being maintained for the first 30 months (2.5 years)

We’re taking care of your maintenance needs so you can focus on your next project. Trust Forterra to help you weather the storm.

Stormceptor®

FORTERRA

Appendix D – Geotechnical Report

PATERSON GROUP

Geotechnical Investigation

Proposed Industrial Building

2760-2770 Sheffield Road
Ottawa, Ontario

Prepared for Richcraft

Report PG6530 -1 dated January 23, 2023

Table of Contents

PAGE

1.0 Introduction 1
2.0 Proposed Development 1
3.0 Method of Investigation 2
3.1 Field Investigation 2
3.2 Field Survey 3
3.3 Laboratory Review 3
3.4 Analytical Testing 3
4.0 Observations 4
4.1 Surface Conditions 4
4.2 Subsurface Profile 4
4.3 Groundwater 5
5.0 Discussion 7
5.1 Geotechnical Assessment 7
5.2 Site Grading and Preparation 7
5.3 Foundation Design 8
5.4 Design for Earthquakes 9
5.5 Slab on Grade Construction 9
5.6 Pavement Design 9
6.0 Design and Construction Precautions 11
6.1 Foundation Backfill 11
6.2 Protection of Footings Against Frost Action 11
6.3 Excavation Side Slopes 11
6.4 Pipe Bedding and Backfill 12
6.5 Groundwater Control 12
6.6 Winter Construction 13
6.7 Corrosion Potential and Sulphate 14
6.8 Landscaping Considerations 14
7.0 Recommendations 16
8.0 Statement of Limitations 17

Appendices

Appendix 1 Soil Profile and Test Data Sheets
Symbols and Terms
Atterberg Limit Testing Results
Analytical Testing Results

Appendix 2 Figure 1 - Key Plan
Drawing PG6530-1 - Test Hole Location Plan

1.0 Introduction

Paterson Group (Paterson) was commissioned by the Richcraft to conduct a geotechnical investigation for the proposed industrial building to be located at 2760-2770 Sheffield Road in the City of Ottawa (refer to Figure 1 - Key Plan in Appendix 2 for the general site location).

The objectives of the geotechnical investigation were to:

- ❑ Determine the subsoil and groundwater conditions at this site by means of boreholes.
- ❑ Provide geotechnical recommendations for the design of the proposed development including construction considerations which may affect the design.

The following report has been prepared specifically and solely for the aforementioned project which is described herein. It contains our findings and includes geotechnical recommendations pertaining to the design and construction of the subject development as they are understood at the time of writing this report.

2.0 Proposed Development

Based on the available drawings, it is understood that the proposed development will consist of an industrial building with a slab-on-grade and an approximate footprint of 10,000 to 11,000 m^2. It is further understood that associated asphalt-paved access lanes, loading areas, and parking areas will surround the proposed building.

It is also understood that the proposed building will be municipally serviced.

3.0 Method of Investigation

3.1 Field Investigation

Field Program

The current geotechnical investigation was carried out on January 10th and 11th, 2023, and consisted of a total of nine (9) boreholes (BH 1-23 through BH 9-23) advanced to a maximum depth of 7.3 m below the existing grade. The borehole locations were distributed in a manner to provide general coverage of the subject site, taking into consideration underground services and available access. The approximate locations of the boreholes are shown on Drawing PG6530-1 - Test Hole Location Plan included in Appendix 2.

The boreholes were drilled using a low-clearance track-mounted drill rig operated by a two-person crew. All fieldwork was conducted under the full-time supervision of Paterson personnel under the direction of a senior engineer.

Sampling and In Situ Testing

The soil samples were collected from the boreholes using a 50 mm diameter split-spoon (SS) sampler or from the drill auger and hand auger flights. The samples were initially classified on site, placed in sealed plastic bags, and transported to our laboratory. The depths at which the drill auger, and split-spoon samples were recovered from the boreholes are shown as AU and SS, respectively, on the Soil Profile and Test Data sheets in Appendix 1.

A Standard Penetration Test (SPT) was conducted in conjunction with the recovery of the split spoon samples. The SPT results are recorded as "N" values on the Soil Profile and Test Data sheets. The "N" value is the number of blows required to drive the split spoon sampler 300 mm into the soil after a 150 mm initial penetration using a 63.5 kg hammer falling from a height of 760 mm.

Undrained shear strength testing was carried out in cohesive soils using a field vane apparatus.

The overburden thickness was evaluated by a dynamic cone penetration test (DCPT) completed at boreholes BH 1-23 and BH 4-23. The DCPT consists of driving a steel drill rod, equipped with a 50 mm diameter cone at the tip, using a 63.5 kg hammer falling from a height of 760 mm. The number of blows required to drive the cone into the soil is recorded for each 300 mm increment.

The subsurface conditions observed in the boreholes were recorded in detail in the field. The soil profiles are logged on the Soil Profile and Test Data Sheets in Appendix 1 of this report.

Groundwater

Three (3) monitoring well were installed at boreholes BH 4-23, BH 8-23 and BH 9-23. Flexible polyethylene standpipes were installed in the remaining boreholes to permit monitoring of the groundwater levels subsequent to the completion of the sampling program. The groundwater observations are discussed in Section 4.3 and presented in the Soil Profile and Test Data Sheets in Appendix 1.

3.2 Field Survey

The borehole locations were selected by Paterson to provide general coverage of the proposed development taking into consideration the existing site features and underground utilities.

The borehole locations, and the ground surface elevation at each borehole location, were surveyed by Paterson using a GPS unit with respect to a geodetic datum. The locations of the boreholes, and ground surface elevation at each borehole location, are presented on Drawing PG6530-1 - Test Hole Location Plan in Appendix 2.

3.3 Laboratory Review

Soil samples were recovered from the subject site and visually examined in our laboratory to review the results of the field logging. A total of three (3) Atterberg limits tests were completed on selected soil samples obtained from the current geotechnical investigation. All samples from the current investigation will be stored in the laboratory for 1 month after this report is completed. They will then be discarded unless we are otherwise directed.

3.4 Analytical Testing

One (1) soil sample was submitted for analytical testing to assess the corrosion potential for exposed ferrous metals and the potential of sulphate attacks against subsurface concrete structures. The sample was submitted to determine the concentration of sulphate and chloride, the resistivity, and the pH of the samples. The results are presented in Appendix 1 and are discussed further in Section 6.7.

4.0 Observations

4.1 Surface Conditions

The subject site is currently a vacant grassed area, however, based on reviewing available aerial photos, the site formerly consisted of a right-of-way for several railroads which have since been demolished. The site is bordered by commercial buildings to the east and west, and the former railroad right-of-way to the north and south. The ground surface across the site is relatively level at approximate geodetic elevation 67 to 68.

4.2 Subsurface Profile

Generally, the subsurface profile at the subject site consists of topsoil and/or fill, extending to approximate depths of 0.2 to 1.8 m, overlying a silty clay deposit. The fill was generally observed to consist of silty sand to silty clay with varying amounts of gravel, cobbles, and organics.

The silty clay deposit, encountered underlying the topsoil and/or fill, was observed to have a very stiff to hard, brown silty clay crust, becoming a stiff, grey silty clay below approximate depths of 2.5 to 3.5 m.

A DCPT was conducted at boreholes BH 1-23 and BH 4-23, which encountered practical refusal at approximate depths of 11.9 and 9.6 m, respectively.

Reference should be made to the Soil Profile and Test Data Sheets in Appendix 1 for details of the soil profile encountered at each borehole location.

Bedrock

Based on available geological mapping, bedrock in the area of the subject site consists of shale of the Carlsbad Formation, with drift thicknesses ranging from 10 to 15 m.

Atterberg Limits Testing

Atterberg limits testing was completed on the recovered silty clay samples at selected locations throughout the subject site during the current and previous investigations. The results of the Atterberg Limits testing are presented in Table 1 on the next page, and on the Atterberg Limits Results sheet in Appendix 1.

Table 1 – Atterberg Limits Results – Current Investigation

Borehole	Sample	Depth (m)	LL (%)	PL (%)	PI (%)	Classification
BH 1-23	SS4	2.3-2.9	63	21	42	CH
BH 3-23	SS4	2.3-2.9	62	22	40	CH
BH 4-23	SS4	2.3-2.9	65	21	44	CH

Notes: LL: Liquid Limit; PL: Plastic Limit; PI: Plastic Index; CH: Inorganic Clay of High Plasticity. MH: Inorganic Silt of High Plasticity

4.3 Groundwater

Groundwater levels were measured in the monitoring wells and standpipe piezometers on January 17, 2023. The measured groundwater levels are presented on the Soil Profile and Test Data sheets in Appendix 1, and in Table 2 below.

Table 2 – Summary of Groundwater Level Readings

Test Hole Number	Ground Surface Elevation (m)	Groundwater Level (m)	Groundwater Elevation (m)	Recording Date
BH 1-23	67.57	0.96	66.61	January 17, 2023
BH 2-23	67.11	1.08	66.03	
BH 3-23	67.28	1.32	65.96	
BH 4-23*	67.73	1.04	66.69	
BH 5-23	67.57	0.79	66.78	
BH 6-23	67.73	0.95	66.78	
BH 7-23	67.45	1.66	65.76	
BH 8-23*	66.80	1.20	65.60	
BH 9-23*	66.74	0.48	66.26	

Note:
-*Denotes borehole instrumented with a 51 mm diameter monitoring well.
- Ground surface elevations at borehole locations were surveyed by Paterson and are referenced to a geodetic datum.

It should be noted that surface water can become trapped within a backfilled borehole, which can lead to higher than typical groundwater level observations. Similarly, it is our experience that surface water generated by snowmelt and rainfall events may sheet drain into the borehole column given the relatively impermeable nature of the silty clay soil surface.

The long-term groundwater level can also be estimated based on the observed colour, moisture content, and consistency of the recovered samples. Based on these observations, the long-term groundwater level is expected at approximate depths of 2.5 to 3 m below the existing ground surface.

However, it should be noted that groundwater levels are subject to seasonal fluctuations, therefore, the groundwater levels could vary at the time of construction.

5.0 Discussion

5.1 Geotechnical Assessment

From a geotechnical perspective, the subject site is suitable for the proposed development. It is recommended that the proposed industrial building be founded on conventional spread footings placed on an undisturbed, very to hard silty clay bearing surface.

Due to the presence of a silty clay deposit, a grade raise restriction will apply to the subject site. Permissible grade raise recommendations are discussed in Section 5.3.

The above and other considerations are further discussed in the following sections.

5.2 Site Grading and Preparation

Stripping Depth

Topsoil and fill, such as those containing organic or deleterious materials, should be stripped from under any buildings and other settlement sensitive structures. It is anticipated that the existing fill within the future building footprint, free of deleterious material and significant amounts of organics, can be left in place below the proposed building footprints outside of lateral support zones for the footings. However, it is recommended that the existing fill layer be proof-rolled several times under dry conditions and above freezing temperatures and approved by Paterson personnel at the time of construction. Any poor performing areas noted during the proof-rolling operation should be removed and replaced with an approved fill.

Fill Placement

Engineered fill placed for grading beneath the proposed buildings, where required, should consist of clean imported granular fill, such as Ontario Provincial Standard Specifications (OPSS) Granular A or Granular B Type II. This material should be tested and approved prior to delivery to the site. The fill should be placed in lifts no greater than 300 mm thick and compacted using suitable compaction equipment for the lift thickness. Fill placed beneath the buildings and paved areas should be compacted to at least 98% of the material's standard Proctor maximum dry density (SPMDD).

Non-specified existing fill, along with site-excavated soil, can be used as general landscaping fill where settlement of the ground surface is of minor concern. This material should be spread in thin lifts and at least compacted by the tracks of the spreading equipment to minimize voids. If this material is to be used to build up the subgrade level for areas to be paved, it should be compacted in thin lifts to at least 95% of the material's SPMDD.

5.3 Foundation Design

Bearing Resistance Values – Conventional Spread Footings

Strip footings, up to 3 m wide, and pad footings, up to 5 m wide, placed on an undisturbed, very stiff to hard silty clay bearing surface can be designed using a bearing resistance value at serviceability limit states (SLS) of **150 kPa** and a factored bearing resistance value at ultimate limit states (ULS) of **225 kPa**. A geotechnical resistance factor of 0.5 is applied to the above noted bearing resistance value at ULS.

The above-noted bearing resistance values at SLS for soil bearing surfaces will be subjected to potential post-construction total and differential settlements of 25 and 20 mm, respectively.

An undisturbed soil bearing surface consists of one from which all topsoil and deleterious materials, such as loose, frozen or disturbed soil, whether in situ or not, have been removed, in the dry, prior to the placement of concrete for footings.

Lateral Support

The bearing medium under footing-supported structures is required to be provided with adequate lateral support with respect to excavations and different foundation levels. Adequate lateral support is provided to a silty clay bearing medium when a plane extending down and out from the bottom edge of the footing at a minimum of 1.5H:1V, passes only through in situ soil or engineered fill of the same or higher capacity as the bearing soil.

Permissible Grade Raise

Due to the presence of the silty clay deposit, a permissible grade raise restriction of **2 m** is recommended. A post-development groundwater lowering of 0.5 m was considered in our permissible grade raise calculations.

If higher than permissible grade raises are required, preloading with or without a surcharge, lightweight fill, and/or other measures should be investigated to reduce the risks of unacceptable long-term post construction total and differential settlements.

5.4 Design for Earthquakes

The site class for seismic site response can be taken as **Class D**. If a higher seismic site class is required (Class C), a site-specific shear wave velocity test may be completed to accurately determine the applicable seismic site classification for foundation design of the proposed buildings, as presented in Table 4.1.8.4.A of the Ontario Building Code (OBC) 2012.

Soils underlying the subject site are not susceptible to liquefaction. Reference should be made to the latest revision of the Ontario Building Code 2012 for a full discussion of the earthquake design requirements.

5.5 Slab on Grade Construction

With the removal of all topsoil and fill, containing significant amounts of deleterious or organic materials, the existing fill subgrade or native soil subgrade approved by the geotechnical consultant at the time of excavation will be considered an acceptable subgrade surface on which to commence backfilling for slab-on-grade construction. Where the subgrade consists of the existing fill, a vibratory drum roller should complete several passes over the subgrade surface as a proof-rolling program. Any poor performing areas should be removed and reinstated with an engineered fill, such as OPSS Granular B Type II.

It is recommended that the upper 200 mm of sub-floor fill consists of OPSS Granular A crushed stone. All backfill material within the footprint of the proposed building should be placed in maximum 300 mm thick loose layers and compacted to at least 98% of its SPMDD.

5.6 Pavement Design

Car only parking, heavy truck parking areas and access lanes are proposed at this site. The proposed pavement structures are presented in Tables 3 and 4 on the next page.

Table 3 – Recommended Pavement Structure – Car Only Parking Areas	
Thickness (mm)	**Material Description**
50	**Wear Course –** HL-3 or Superpave 12.5 Asphaltic Concrete
150	**BASE –** OPSS Granular A Crushed Stone
300	**SUBBASE –** OPSS Granular B Type II
Subgrade – Either fill, in-situ soil, or OPSS Granular B Type I or II material placed over fill or in-situ soil.	

Table 4 - Recommended Pavement Structure - Access Lanes/Local Roadways, Loading Areas and Heavy Truck Parking	
Thickness (mm)	**Material Description**
40	**Wear Course** - Superpave 12.5 Asphaltic Concrete
50	**Binder Course** - Superpave 19.0 Asphaltic Concrete
150	**BASE** - OPSS Granular A Crushed Stone
450	**SUBBASE** - OPSS Granular B Type II
SUBGRADE - Either fill, in situ soil, or OPSS Granular B Type I or II material placedover fill or in situ soil.	

If soft spots develop in the subgrade during compaction or due to construction traffic, the affected areas should be excavated and replaced with OPSS Granular B Type I or II material. Minimum Performance Graded (PG) 58-34 asphalt cement should be used for this project. The pavement granular base and subbase should be placed in maximum 300 mm thick lifts and compacted to a minimum of 99% of the material's SPMDD using suitable compaction equipment.

Pavement Structure Drainage

Satisfactory performance of the pavement structure is largely dependent on keeping the contact zone between the subgrade material and the base stone in a dry condition. Failure to provide adequate drainage under conditions of heavy wheel loading can result in the fine subgrade soil being pumped into the voids in the stone subbase, thereby reducing its load carrying capacity. For areas where silty clay is encountered at subgrade level, it is recommended that subdrains be installed during the pavement construction as per City of Ottawa standards. The subdrain inverts should be approximately 300 mm below subgrade level. The subgrade surface should be crowned to promote water flow to the drainage lines.

6.0 Design and Construction Precautions

6.1 Foundation Backfill

Backfill against the exterior sides of the foundation walls should consist of free draining non frost susceptible granular materials, such as clean sand or OPSS Granular B Type I granular material. The greater part of the site excavated materials will be frost susceptible and, as such, are not recommended for re-use as backfill against the foundation walls.

6.2 Protection of Footings Against Frost Action

Perimeter footings of heated structures are required to be insulated against the deleterious effects of frost action. A minimum 1.5 m thick soil cover, or an equivalent thickness of soil cover and foundation insulation, should be provided for adequate frost protection of heated structures.

Exterior unheated footings, such as those for isolated exterior piers, retaining walls or loading ramps, are more prone to deleterious movement associated with frost action. These should be provided with a minimum 2.1 m thick soil cover, or an equivalent thickness of soil cover and foundation insulation

Consideration should be given to providing 2.1 m thick soil cover to interior footings within loading bays where significant exposure to freezing conditions during the winter months may occur. Further consideration may be given to installing heated slabs in these areas.

6.3 Excavation Side Slopes

The side slopes of the excavations in the soil and fill overburden materials should either be cut back at acceptable slopes or should be retained by shoring systems from the start of the excavation until the structure is backfilled. It is expected that sufficient room will be available for the greater part of the excavation to be undertake by open-cut methods (i.e. unsupported excavations).

Unsupported Excavations

The excavation side slopes above the groundwater level extending to a maximum depth of 3 m should be cut back at 1H:1V or flatter. The flatter slope is required for excavation below groundwater level.

The subsoil at this site is considered to be mainly Type 2 and 3 soil according to the Occupational Health and Safety Act and Regulations for Construction Projects.

Excavated soil should not be stockpiled directly at the top of excavations and heavy equipment should be kept away from the excavation sides.

Slopes in excess of 3 m in height should be periodically inspected by the geotechnical consultant in order to detect if the slopes are exhibiting signs of distress.

It is recommended that a trench box be used at all times to protect personnel working in trenches with steep or vertical sides. It is expected that services will be installed by "cut and cover" methods and excavations will not be left open for extended periods of time.

6.4 Pipe Bedding and Backfill

Bedding and backfill materials should be in accordance with the most recent Material Specifications and Standard Detail Drawings from the Department of Public Works and Services, Infrastructure Services Branch of the City of Ottawa.

A minimum of 150 mm of OPSS Granular A should be placed for bedding for sewer or water pipes when placed on a soil subgrade. The bedding should extend to the spring line of the pipe. Cover material, from the spring line to a minimum of 300 mm above the obvert of the pipe, should consist of OPSS Granular A (concrete or PSM PVC pipes) or sand (concrete pipe). The bedding and cover materials should be placed in maximum 225 mm thick lifts and compacted to 98% of the SPMDD.

Where hard surface areas are considered above the trench backfill, the trench backfill material within the frost zone (about 1.8 m below finished grade) and above the cover material should match the soils exposed at the trench walls to minimize differential frost heaving. The trench backfill should be placed in maximum 300 mm thick loose lifts and compacted to a minimum of 95% of the material's SPMDD. All cobbles larger than 200 mm in their longest direction should be segregated from re-use as trench backfill.

6.5 Groundwater Control

It is anticipated that groundwater infiltration into the excavations should be low to moderate and controllable using open sumps. The contractor should be prepared to direct water away from all subgrades, regardless of the source, to prevent disturbance to the founding medium.

Groundwater Control for Building Construction

A temporary Ministry of Environment, Conservation and Parks (MECP) permit to take water (PTTW) may be required if more than 400,000 L/day of ground and/or surface water are to be pumped during the construction phase. At least 4 to 5 months should be allowed for completion of the application and issuance of the permit by the MECP.

For typical ground or surface water volumes being pumped during the construction phase, typically between 50,000 to 400,000 L/day, it is required to register on the Environmental Activity and Sector Registry (EASR). A minimum of two to four weeks should be allotted for completion of the EASR registration and the Water Taking and Discharge Plan to be prepared by a Qualified Persons as stipulated under O.Reg. 63/16.

If a project qualifies for a PTTW based upon anticipated conditions, an EASR will not be allowed as a temporary dewatering measure while awaiting the MECP review of the PTTW application.

Impacts to Neighboring Properties

As the proposed building will be a slab-on-grade structure, it is not anticipated that it will be founded below the long-term groundwater level. As a result, long-term groundwater lowering is not anticipated, and therefore no adverse effects are expected to neighboring properties.

Further, as the proposed slab-on-grade structures will be setback from the site limits, no impacts to the neighbouring properties are anticipated as a result of excavation at the subject site.

6.6 Winter Construction

Precautions must be taken if winter construction is considered for this project. The subsoil conditions at this site consist of frost susceptible materials. In the presence of water and freezing conditions, ice could form within the soil mass. Heaving and settlement upon thawing could occur.

In the event of construction during below zero temperatures, the founding stratum should be protected from freezing temperatures using straw, propane heaters and tarpaulins or other suitable means.

In this regard, the base of the excavations should be insulated from sub-zero temperatures immediately upon exposure and until such time as heat is adequately supplied to the building and the footings are protected with sufficient soil cover to prevent freezing at founding level.

Trench excavations and pavement construction are also difficult activities to complete during freezing conditions without introducing frost into the subgrade or in the excavation walls and bottoms. Precautions should be taken if such activities are to be carried out during freezing conditions. Additional information could be provided, if required.

6.7 Corrosion Potential and Sulphate

The results of analytical testing show that the sulphate content is less than 0.1%. This result is indicative that Type 10 Portland cement (normal cement) would be appropriate for this site. The chloride content and the pH of the sample indicate that they are not significant factors in creating a corrosive environment for exposed ferrous metals at this site, whereas the resistivity is indicative of a moderate to aggressive corrosive environment.

6.8 Landscaping Considerations

Paterson completed a soils review of the site to determine applicable tree planting setbacks, in accordance with the City of Ottawa Tree Planting in Sensitive Marine Clay Soils (2017 Guidelines) for trees planted within a public right-of-way (ROW).

Atterberg limits testing was completed for recovered silty clay samples at selected locations throughout the subject site. Grain size distribution and hydrometer testing was also completed on selected soil samples. The above-noted test results were completed on samples taken at depths between the anticipated underside of footing elevation and a 3.5 m depth below finished grade. The results of our testing are presented in Tables 1, 2, and 3 in Section 4.2, and in Appendix 1.

Based on these testing results, the plasticity index was found to be less than or equal to 40%. Therefore, the silty clay encountered throughout the subject site is considered to be a clay of low to medium potential for soil volume change.

The following tree planting setbacks are therefore recommended for the low to medium sensitivity silty clay deposit present throughout the subject site. Large trees (mature height over 14 m) can be planted provided a tree to foundation setback equal to the full mature height of the tree can be provided (e.g., in a park or other green space).

Tree planting setback limits may be reduced to **7.5 m** for small (mature height up to 7.5 m) and medium size trees (mature tree height 7.5 to 14 m), provided that the condition noted below are met:

- The underside of footing (USF) is 2.1 m or greater below the lowest finished grade must be satisfied for footings within 10 m from the tree, as measured from the centre of the tree trunk and verified by means of the Grading Plan as indicated procedural changes below.

- A small tree must be provided with a minimum of 25 m^3 of available soil volume while a medium tree must be provided with a minimum of 30 m^3 of available soil volume, as determined by the Landscape Architect. The developer is to ensure that the soil is generally un-compacted when backfilling in street tree planting locations.

- The The tree species must be small (mature tree height up to 7.5 m) to medium size (mature tree height 7.5 m to 14 m) as confirmed by the Landscape Architect.

- The foundation walls are to be reinforced at least nominally (minimum of two upper and two lower 15M bars in the foundation wall).

- Grading surrounding the tree must promote drainage to the tree root zone (in such a manner as not to be detrimental to the tree).

It is well documented in the literature, and is our experience, that fast-growing trees located near buildings founded on cohesive soils that shrink on drying can result in long-term differential settlements of the structures. Tree varieties that have the most pronounced effect on foundations are seen to consist of poplars, willows and some maples (i.e. Manitoba Maples) and, as such, they should not be considered in the landscaping design.

7.0 Recommendations

It is a requirement for the foundation data provided herein to be applicable that the following material testing, and observation program be performed by the geotechnical consultant.

- Review of the grading plan, from a geotechnical perspective.
- Observation of all bearing surfaces prior to the placement of concrete.
- Sampling and testing of the concrete and fill materials.
- Periodic observation of the condition of unsupported excavation side slopes in excess of 3 m in height, if applicable.
- Observation of all subgrades prior to backfilling.
- Field density tests to determine the level of compaction achieved.
- Sampling and testing of the bituminous concrete including mix design reviews.

All excess soils, with the exception of engineered crushed stone fill, generated by construction activities that will be transported on-site or off-site should be handled as per *Ontario Regulation 406/19: On-Site and Excess Soil Management*.

A report confirming that these works have been conducted in general accordance with our recommendations could be issued upon request, following the completion of a satisfactory material testing and observation program by Paterson

8.0 Statement of Limitations

The recommendations provided are in accordance with the present understanding of the project. Paterson requests permission to review the recommendations when the drawings and specifications are completed.

A soils investigation is a limited sampling of a site. Should any conditions at the site be encountered which differ from those at the test locations, Paterson requests immediate notification to permit reassessment of our recommendations.

The recommendations provided herein should only be used by the design professionals associated with this project. They are not intended for contractors bidding on or undertaking the work. The latter should evaluate the factual information provided in this report and determine the suitability and completeness for their intended construction schedule and methods. Additional testing may be required for their purposes.

The present report applies only to the project described in this document. Use of this report for purposes other than those described herein or by person(s) other than Richcraft, or their agents, is not authorized without review by Paterson for the applicability of our recommendations to the alternative use of the report.

Paterson Group Inc.

Puneet Bandi, M.Eng.

Scott S. Dennis, P.Eng.

Report Distribution:

- ❑ Richcraft (e-mail copy)
- ❑ Paterson Group (1 copy)

APPENDIX 1

SOIL PROFILE AND TEST DATA SHEETS

SYMBOLS AND TERMS

ATTERBERG LIMIT TESTING RESULTS

ANALYTICAL TESTING RESULTS

patersongroup Consulting Engineers

9 Auriga Drive, Ottawa, Ontario K2E 7T9

SOIL PROFILE AND TEST DATA

Geotechnical Investigation
Prop. Industrial Building - 2760-2770 Sheffield Drive
Ottawa, Ontario

DATUM Geodetic

REMARKS

BORINGS BY CME-55 Low Clearance Drill **DATE** January 10, 2023

FILE NO. PG6530

HOLE NO. BH 1-23

SOIL DESCRIPTION	STRATA PLOT	SAMPLE TYPE	NUMBER	% RECOVERY	N VALUE or RQD	DEPTH (m)	ELEV. (m)
GROUND SURFACE						0	67.57
TOPSOIL 0.15		AU	1				
FILL: Peat with brown silty sand, trace gravel 0.41							
		SS	2	75	6	1	66.57
		SS	3	83	P	2	65.57
		SS	4	100	P		
Very stiff to stiff, brown **SILTY CLAY**		SS	5	100	P	3	64.57
- grey by 3.7m depth		SS	6	100	P	4	63.57
		SS	7	100	P	5	62.57
		SS	8	100	P	6	61.57
6.71		SS	9	100	P		
Dyamic Cone Penetration Test commenced at 6.71m depth. Cone pushed to 9.75m depth.						7	60.57
						8	59.57
						9	58.57
						10	57.57
						11	56.57
11.91							
End of Borehole							
Practical DCPT refusal at 11.91m depth.							
(GWL @ 0.96m - Jan. 17, 2023)							

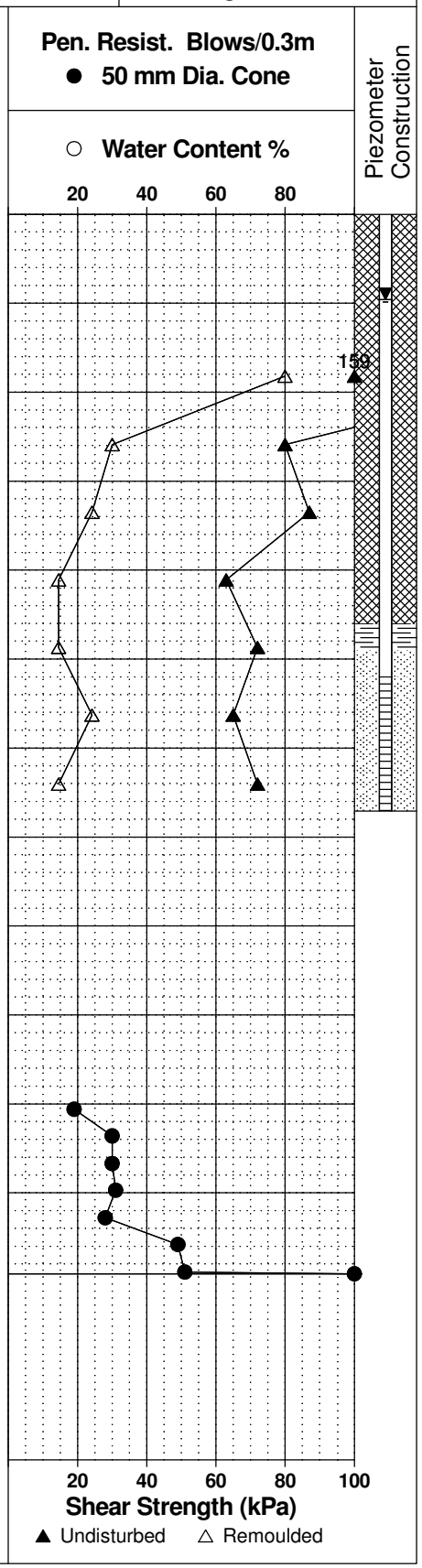

patersongroup Consulting Engineers

9 Auriga Drive, Ottawa, Ontario K2E 7T9

SOIL PROFILE AND TEST DATA

Geotechnical Investigation
Prop. Industrial Building - 2760-2770 Sheffield Drive
Ottawa, Ontario

DATUM Geodetic

REMARKS

BORINGS BY CME-55 Low Clearance Drill **DATE** January 10, 2023

FILE NO. PG6530

HOLE NO. BH 2-23

SOIL DESCRIPTION	STRATA PLOT	SAMPLE TYPE	NUMBER	% RECOVERY	N VALUE or RQD	DEPTH (m)	ELEV. (m)
GROUND SURFACE						0	67.11
TOPSOIL 0.20							
FILL: Brown silty clay with topsoil, some peat and gravel 1.07		AU	1				
		SS	2	42	6	1	66.11
		SS	3	58	P	2	65.11
Very stiff to stiff, brown **SILTY CLAY**		SS	4	100	P	3	64.11
- grey by 3.15m depth		SS	5	100	P	4	63.11
		SS	6	100	P	5	62.11
		SS	7	67	P	6	61.11
		SS	8	100	P		
6.71		SS	9	100	P		
End of Borehole							
(GWL @ 1.08m - Jan. 17, 2023)							

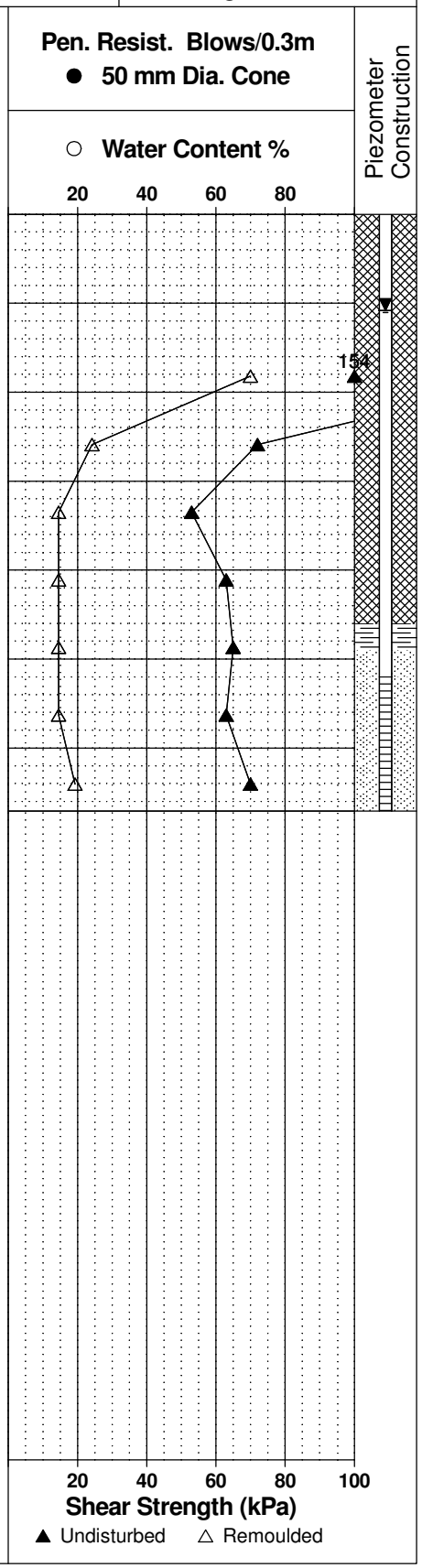

patersongroup Consulting Engineers

9 Auriga Drive, Ottawa, Ontario K2E 7T9

SOIL PROFILE AND TEST DATA

Geotechnical Investigation
Prop. Industrial Building - 2760-2770 Sheffield Drive
Ottawa, Ontario

DATUM Geodetic

REMARKS

BORINGS BY CME-55 Low Clearance Drill **DATE** January 10, 2023

FILE NO. PG6530

HOLE NO. BH 3-23

SOIL DESCRIPTION	STRATA PLOT	SAMPLE TYPE	NUMBER	% RECOVERY	N VALUE or RQD	DEPTH (m)	ELEV. (m)
GROUND SURFACE						0	67.28
FILL: Brown silty sand with gravel, occasional cobbles 0.15 / 0.48		AU	1				
FILL: Brown silty clay, some gravel, trace topsoil		SS	2	58	7	1	66.28
		SS	3	67		2	65.28
		SS	4	100			
Very stiff to stiff, brown **SILTY CLAY**		SS	5	100		3	64.28
- grey by 3.7m depth		SS	6	100		4	63.28
		SS	7	100		5	62.28
		SS	8	67		6	61.28
6.71		SS	9	4	P		
End of Borehole							
(GWL @ 1.32m - Jan. 17, 2023)							

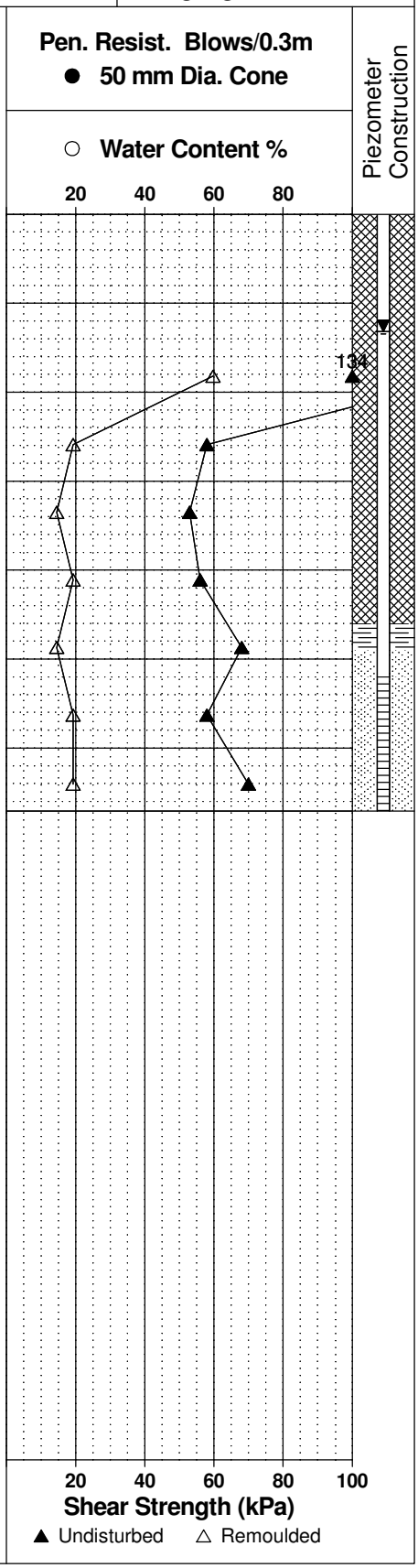

patersongroup Consulting Engineers

9 Auriga Drive, Ottawa, Ontario K2E 7T9

SOIL PROFILE AND TEST DATA

Geotechnical Investigation
Prop. Industrial Building - 2760-2770 Sheffield Drive
Ottawa, Ontario

DATUM Geodetic

REMARKS

BORINGS BY CME-55 Low Clearance Drill **DATE** January 10, 2023

FILE NO. PG6530

HOLE NO. BH 4-23

SOIL DESCRIPTION	STRATA PLOT	SAMPLE TYPE	NUMBER	% RECOVERY	N VALUE or RQD	DEPTH (m)	ELEV. (m)
GROUND SURFACE						0	67.73
FILL: Dark brown silty sand with gravel, some clay, trace organics		AU	1				
0.94		SS	2	62	7	1	66.73
		SS	3	58	P	2	65.73
		SS	4	83	P		
Very stiff to stiff, brown **SILTY CLAY**		SS	5	83	P	3	64.73
- grey by 3.7m depth		SS	6	100	P	4	63.73
		SS	7	100	P	5	62.73
		SS	8	100	P	6	61.73
6.71		SS	9		P		
Dynamic Cone Penetration Test commenced at 6.71m depth. Cone pushed to 9.3m depth.						7	60.73
						8	59.73
						9	58.73
9.60							
End of Borehole							
Practical DCPT refusal at 9.60m depth.							
(GWL @ 1.04m - Jan. 17, 2023)							

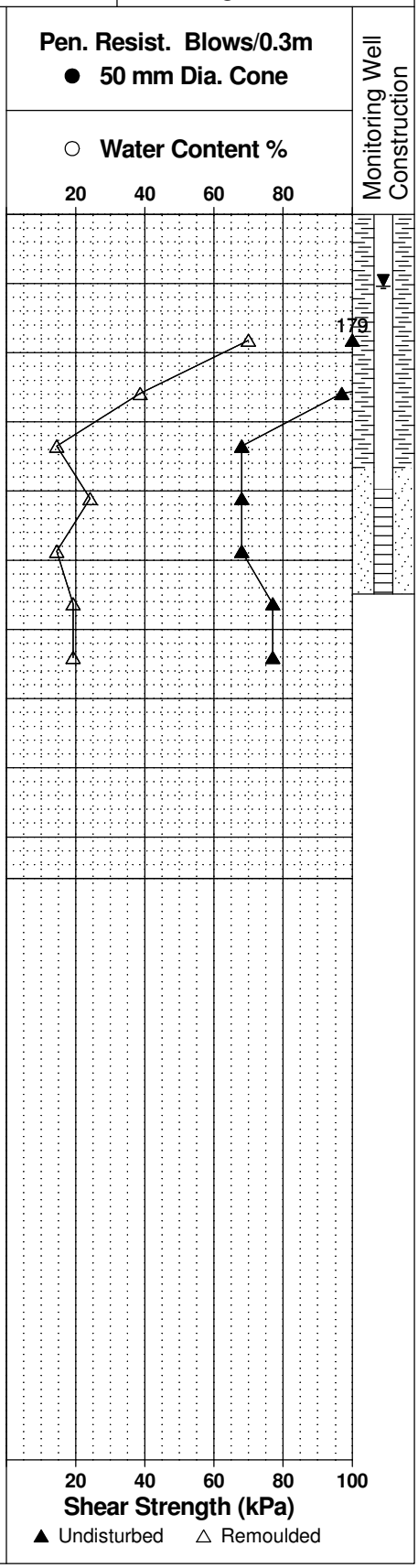

patersongroup Consulting Engineers

9 Auriga Drive, Ottawa, Ontario K2E 7T9

SOIL PROFILE AND TEST DATA

Geotechnical Investigation
Prop. Industrial Building - 2760-2770 Sheffield Drive
Ottawa, Ontario

DATUM Geodetic

REMARKS

BORINGS BY CME-55 Low Clearance Drill **DATE** January 10, 2023

FILE NO. PG6530

HOLE NO. BH 5-23

SOIL DESCRIPTION	STRATA PLOT	SAMPLE TYPE	SAMPLE NUMBER	SAMPLE % RECOVERY	SAMPLE N VALUE or RQD	DEPTH (m)	ELEV. (m)
GROUND SURFACE						0	67.57
FILL: Dark brown silty sand with gravel, trace clay, occasional cobbles 0.69		AU	1				
FILL: Dark brown silty clay, some sand and gravel, trace organics 1.22		SS	2	75	3	1	66.57
Very stiff to stiff, brown **SILTY CLAY**		SS	3	42	P	2	65.57
		SS	4	75	P	3	64.57
3.66		SS	5	83	P		
End of Borehole							
(GWL @ 0.79m - Jan. 17, 2023)							

Pen. Resist. Blows/0.3m
● **50 mm Dia. Cone**
○ **Water Content %**

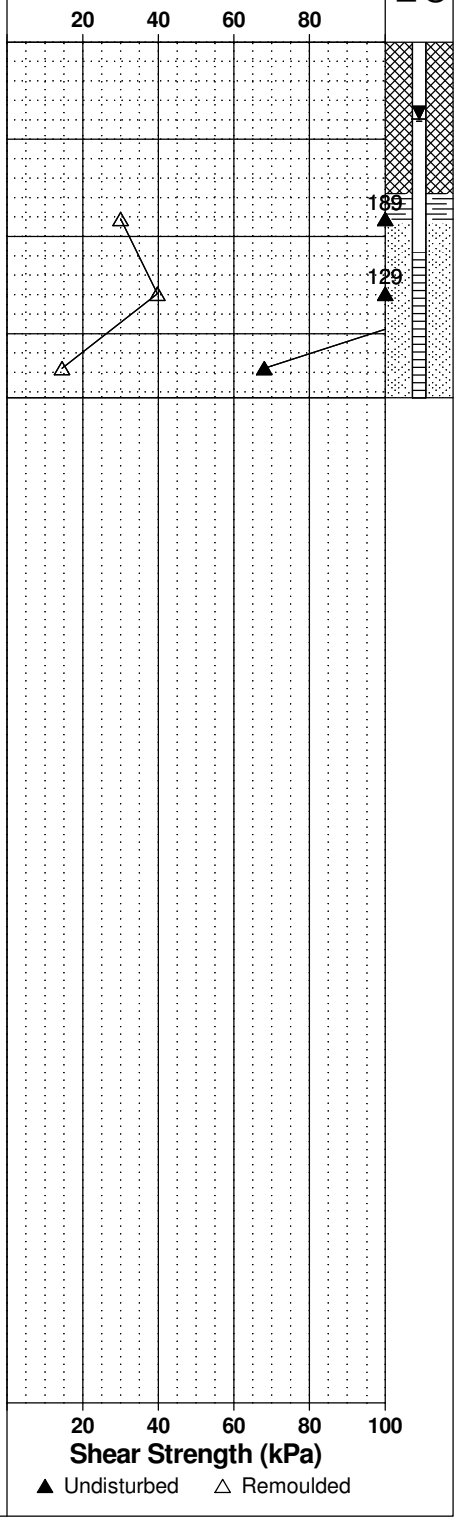

Piezometer Construction

patersongroup Consulting Engineers

9 Auriga Drive, Ottawa, Ontario K2E 7T9

SOIL PROFILE AND TEST DATA

Geotechnical Investigation
Prop. Industrial Building - 2760-2770 Sheffield Drive
Ottawa, Ontario

DATUM Geodetic

REMARKS

BORINGS BY CME-55 Low Clearance Drill **DATE** January 11, 2023

FILE NO. PG6530

HOLE NO. BH 6-23

SOIL DESCRIPTION	STRATA PLOT	SAMPLE TYPE	NUMBER	% RECOVERY	N VALUE or RQD	DEPTH (m)	ELEV. (m)
GROUND SURFACE						0	67.73
FILL: Dark brown silty clay, some gravel, topsoil and organics		AU	1				
0.91		SS	2	29	6	1	66.73
Hard to stiff, brown **SILTY CLAY**		SS	3	58	P	2	65.73
		SS	4	83	P	3	64.73
3.66		SS	5	100	P		
End of Borehole							
(GWL @ 0.95m - Jan. 17, 2023)							

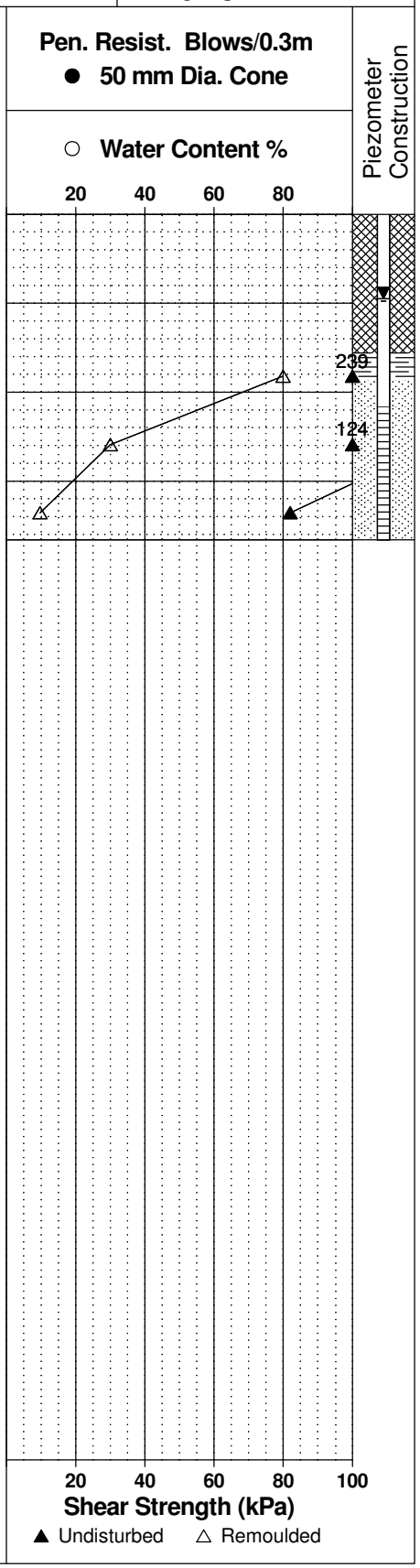

patersongroup Consulting Engineers

9 Auriga Drive, Ottawa, Ontario K2E 7T9

SOIL PROFILE AND TEST DATA

Geotechnical Investigation
Prop. Industrial Building - 2760-2770 Sheffield Drive
Ottawa, Ontario

DATUM Geodetic

REMARKS

BORINGS BY CME-55 Low Clearance Drill **DATE** January 11, 2023

FILE NO. PG6530

HOLE NO. BH 7-23

SOIL DESCRIPTION	STRATA PLOT	SAMPLE TYPE	NUMBER	% RECOVERY	N VALUE or RQD	DEPTH (m)	ELEV. (m)
GROUND SURFACE						0	67.45
FILL: Brown silty sand with gravel, occasional cobbles 0.28		AU	1				
FILL: Dark brown silty clay, some gravel, topsoil, organics 0.91		SS	2	67	6	1	66.45
		SS	3	58	P	2	65.45
		SS	4	83	P		
Hard to stiff, brown **SILTY CLAY**		SS	5	100	P	3	64.45
- grey by 3.7m depth		SS	6	100	P	4	63.45
		SS	7	58	P	5	62.45
		SS	8	100	P	6	61.45
6.71		SS	9	67	P		
End of Borehole							
(GWL @ 1.66m - Jan. 17, 2023)							

Pen. Resist. Blows/0.3m
● 50 mm Dia. Cone

○ Water Content %

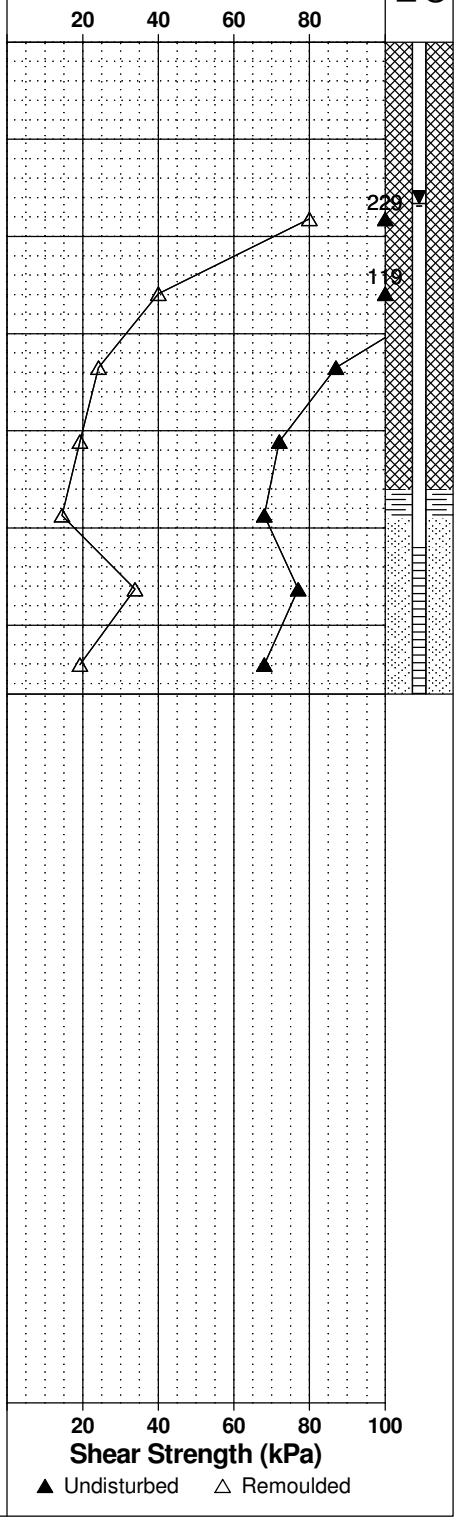

Piezometer Construction

patersongroup Consulting Engineers

9 Auriga Drive, Ottawa, Ontario K2E 7T9

SOIL PROFILE AND TEST DATA

Geotechnical Investigation
Prop. Industrial Building - 2760-2770 Sheffield Drive
Ottawa, Ontario

DATUM Geodetic

REMARKS

BORINGS BY CME-55 Low Clearance Drill **DATE** January 11, 2023

FILE NO. PG6530

HOLE NO. BH 8-23

SOIL DESCRIPTION	STRATA PLOT	SAMPLE TYPE	NUMBER	% RECOVERY	N VALUE or RQD	DEPTH (m)	ELEV. (m)
GROUND SURFACE						0	66.80
FILL: Crushed stone and gravel with sand (0.59)		AU	1				
		SS	2	58	8	1	65.80
		SS	3	75	P	2	64.80
		SS	4	75	P		
Very stiff to stiff, brown **SILTY CLAY**		SS	5	100	P	3	63.80
- grey by 3.4m depth		SS	6	100	P	4	62.80
		SS	7	100	P	5	61.80
		SS	8	100	P	6	60.80
(6.71)		SS	9	67	P		
End of Borehole							
(GWL @ 1.20m - Jan. 17, 2023)							

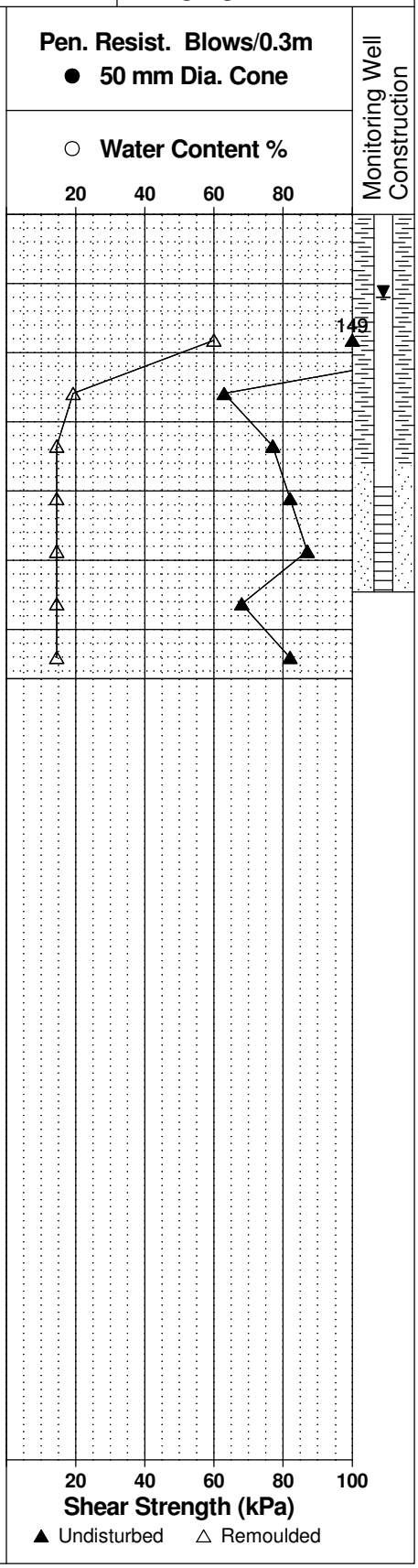

patersongroup Consulting Engineers

9 Auriga Drive, Ottawa, Ontario K2E 7T9

SOIL PROFILE AND TEST DATA

Geotechnical Investigation
Prop. Industrial Building - 2760-2770 Sheffield Drive
Ottawa, Ontario

DATUM Geodetic

REMARKS

BORINGS BY CME-55 Low Clearance Drill **DATE** January 11, 2023

FILE NO. PG6530

HOLE NO. BH 9-23

SOIL DESCRIPTION	STRATA PLOT	SAMPLE TYPE	NUMBER	% RECOVERY	N VALUE or RQD	DEPTH (m)	ELEV. (m)
GROUND SURFACE						0	66.74
FILL: Crushed stone and gravel with sand (0.56)		AU	1				
FILL: Brown silty clay, some sand		SS	2	67	10	1	65.74
(1.83) - trace gravel by 1.7m depth		SS	3	75	P	2	64.74
		SS	4	92	P		
Very stiff to stiff, brown **SILTY CLAY**		SS	5	58	P	3	63.74
- grey by 3.7m depth		SS	6	100	P	4	62.74
		SS	7	100	P	5	61.74
		SS	8	100	P	6	60.74
		SS	9	100	P	7	59.74
(7.32) End of Borehole							

(GWL @ 0.48m - Jan. 17, 2023)

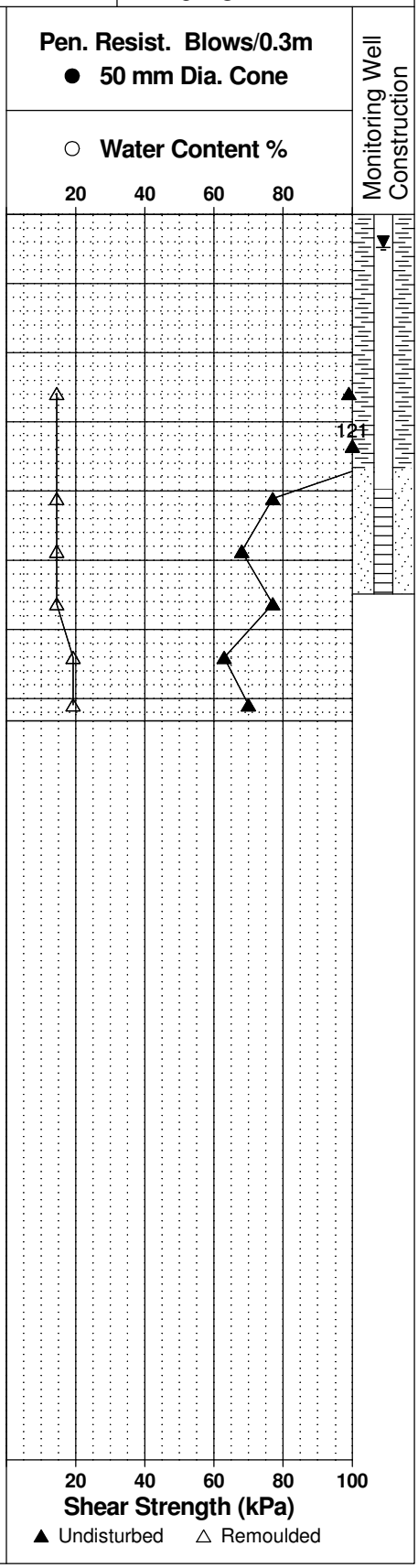

SYMBOLS AND TERMS

SOIL DESCRIPTION

Behavioural properties, such as structure and strength, take precedence over particle gradation in describing soils. Terminology describing soil structure are as follows:

Desiccated	-	having visible signs of weathering by oxidation of clay minerals, shrinkage cracks, etc.
Fissured	-	having cracks, and hence a blocky structure.
Varved	-	composed of regular alternating layers of silt and clay.
Stratified	-	composed of alternating layers of different soil types, e.g. silt and sand or silt and clay.
Well-Graded	-	Having wide range in grain sizes and substantial amounts of all intermediate particle sizes (see Grain Size Distribution).
Uniformly-Graded	-	Predominantly of one grain size (see Grain Size Distribution).

The standard terminology to describe the relative strength of cohesionless soils is the compactness condition, usually inferred from the results of the Standard Penetration Test (SPT) 'N' value. The SPT N value is the number of blows of a 63.5 kg hammer, falling 760 mm, required to drive a 51 mm O.D. split spoon sampler 300 mm into the soil after an initial penetration of 150 mm. An SPT N value of "P" denotes that the split-spoon sampler was pushed 300 mm into the soil without the use of a falling hammer.

Compactness Condition	'N' Value	Relative Density %
Very Loose	<4	<15
Loose	4-10	15-35
Compact	10-30	35-65
Dense	30-50	65-85
Very Dense	>50	>85

The standard terminology to describe the strength of cohesive soils is the consistency, which is based on the undisturbed undrained shear strength as measured by the in situ or laboratory shear vane tests, unconfined compression tests, or occasionally by the Standard Penetration Test (SPT). Note that the typical correlations of undrained shear strength to SPT N value (tabulated below) tend to underestimate the consistency for sensitive silty clays, so Paterson reviews the applicable split spoon samples in the laboratory to provide a more representative consistency value based on tactile examination.

Consistency	Undrained Shear Strength (kPa)	'N' Value
Very Soft	<12	<2
Soft	12-25	2-4
Firm	25-50	4-8
Stiff	50-100	8-15
Very Stiff	100-200	15-30
Hard	>200	>30

SYMBOLS AND TERMS (continued)

SOIL DESCRIPTION (continued)

Cohesive soils can also be classified according to their “sensitivity”. The sensitivity, S_t, is the ratio between the undisturbed undrained shear strength and the remoulded undrained shear strength of the soil. The classes of sensitivity may be defined as follows:

Low Sensitivity:	$S_t < 2$
Medium Sensitivity:	$2 < S_t < 4$
Sensitive:	$4 < S_t < 8$
Extra Sensitive:	$8 < S_t < 16$
Quick Clay:	$S_t > 16$

ROCK DESCRIPTION

The structural description of the bedrock mass is based on the Rock Quality Designation (RQD).

The RQD classification is based on a modified core recovery percentage in which all pieces of sound core over 100 mm long are counted as recovery. The smaller pieces are considered to be a result of closely-spaced discontinuities (resulting from shearing, jointing, faulting, or weathering) in the rock mass and are not counted. RQD is ideally determined from NQ or larger size core. However, it can be used on smaller core sizes, such as BQ, if the bulk of the fractures caused by drilling stresses (called “mechanical breaks”) are easily distinguishable from the normal in situ fractures.

RQD %	ROCK QUALITY
90-100	Excellent, intact, very sound
75-90	Good, massive, moderately jointed or sound
50-75	Fair, blocky and seamy, fractured
25-50	Poor, shattered and very seamy or blocky, severely fractured
0-25	Very poor, crushed, very severely fractured

SAMPLE TYPES

SS	-	Split spoon sample (obtained in conjunction with the performing of the Standard Penetration Test (SPT))
TW	-	Thin wall tube or Shelby tube, generally recovered using a piston sampler
G	-	"Grab" sample from test pit or surface materials
AU	-	Auger sample or bulk sample
WS	-	Wash sample
RC	-	Rock core sample (Core bit size BQ, NQ, HQ, etc.). Rock core samples are obtained with the use of standard diamond drilling bits.

SYMBOLS AND TERMS (continued)

PLASTICITY LIMITS AND GRAIN SIZE DISTRIBUTION

WC%	-	Natural water content or water content of sample, %
LL	-	Liquid Limit, % (water content above which soil behaves as a liquid)
PL	-	Plastic Limit, % (water content above which soil behaves plastically)
PI	-	Plasticity Index, % (difference between LL and PL)
Dxx	-	Grain size at which xx% of the soil, by weight, is of finer grain sizes These grain size descriptions are not used below 0.075 mm grain size
D10	-	Grain size at which 10% of the soil is finer (effective grain size)
D60	-	Grain size at which 60% of the soil is finer
Cc	-	Concavity coefficient = $(D30)^2 / (D10 \times D60)$
Cu	-	Uniformity coefficient = D60 / D10

Cc and Cu are used to assess the grading of sands and gravels:
Well-graded gravels have: $1 < Cc < 3$ and $Cu > 4$
Well-graded sands have: $1 < Cc < 3$ and $Cu > 6$
Sands and gravels not meeting the above requirements are poorly-graded or uniformly-graded.
Cc and Cu are not applicable for the description of soils with more than 10% silt and clay (more than 10% finer than 0.075 mm or the #200 sieve)

CONSOLIDATION TEST

p'_o	-	Present effective overburden pressure at sample depth
p'_c	-	Preconsolidation pressure of (maximum past pressure on) sample
Ccr	-	Recompression index (in effect at pressures below p'_c)
Cc	-	Compression index (in effect at pressures above p'_c)
OC Ratio		Overconsolidaton ratio = p'_c / p'_o
Void Ratio		Initial sample void ratio = volume of voids / volume of solids
Wo	-	Initial water content (at start of consolidation test)

PERMEABILITY TEST

k	-	Coefficient of permeability or hydraulic conductivity is a measure of the ability of water to flow through the sample. The value of k is measured at a specified unit weight for (remoulded) cohesionless soil samples, because its value will vary with the unit weight or density of the sample during the test.

SYMBOLS AND TERMS (continued)

STRATA PLOT

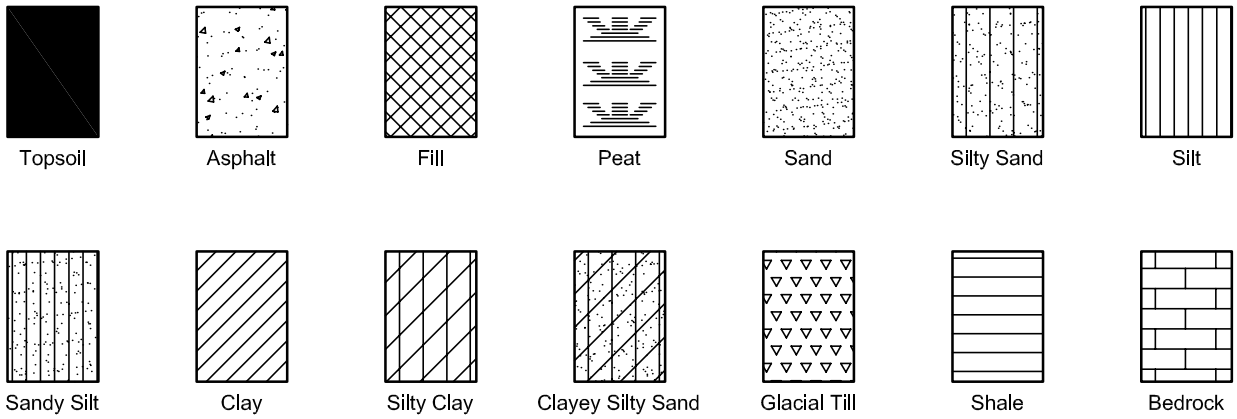

MONITORING WELL AND PIEZOMETER CONSTRUCTION

MONITORING WELL CONSTRUCTION

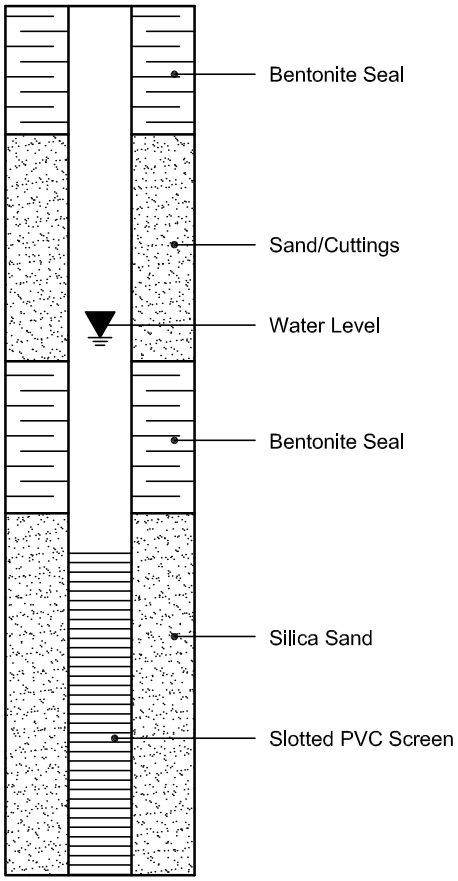

PIEZOMETER CONSTRUCTION

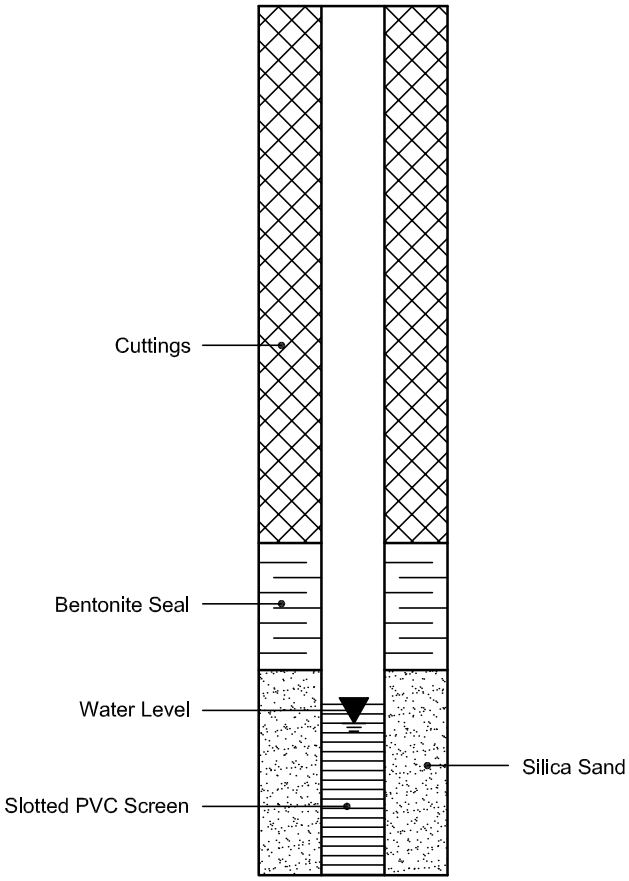

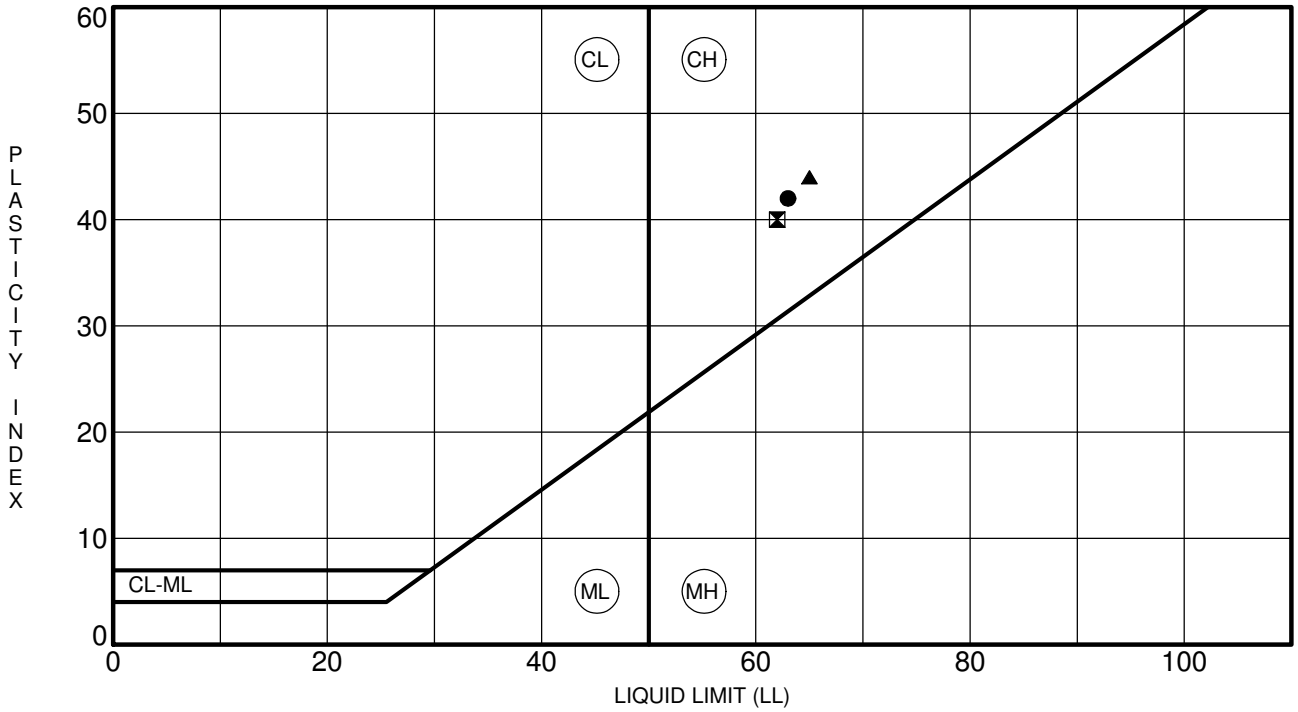

	Specimen Identification		LL	PL	PI	Fines	Classification
●	**BH 1-23**	**SS4**	**63**	**21**	**42**		**CH - Inorganic clay of high plasticity**
⧗	**BH 3-23**	**SS5**	**62**	**22**	**40**		**CH - Inorganic clay of high plasticity**
▲	**BH 4-23**	**SS4**	**65**	**21**	**44**		**CH - Inorganic clay of high plasticity**

CLIENT	**Richcraft Homes**	FILE NO.	**PG6530**
PROJECT	**Geotechnical Investigation - Prop. Industrial Building - 2760-2770 Sheffield Drive**	DATE	**10 Jan 23**

patersongroup Consulting Engineers
9 Auriga Drive, Ottawa, Ontario K2E 7T9

ATTERBERG LIMITS' RESULTS

PARACEL LABORATORIES LTD.

Order #: 2302473

Certificate of Analysis

Client: **Paterson Group Consulting Engineers**

Client PO: 56579

Report Date: 17-Jan-2023

Order Date: 12-Jan-2023

Project Description: PG6530

	Client ID:	BH3-23-SS3	-	-	-
	Sample Date:	10-Jan-23 09:00	-	-	-
	Sample ID:	2302473-01	-	-	-
	MDL/Units	Soil	-	-	-
Physical Characteristics					
% Solids	0.1 % by Wt.	74.1	-	-	-
General Inorganics					
pH	0.05 pH Units	7.37	-	-	-
Resistivity	0.10 Ohm.m	38.1	-	-	-
Anions					
Chloride	10 ug/g dry	73	-	-	-
Sulphate	10 ug/g dry	51	-	-	-

APPENDIX 2

FIGURE 1 - KEY PLAN

DRAWING PG6530 - 1 - TEST HOLE LOCATION PLAN

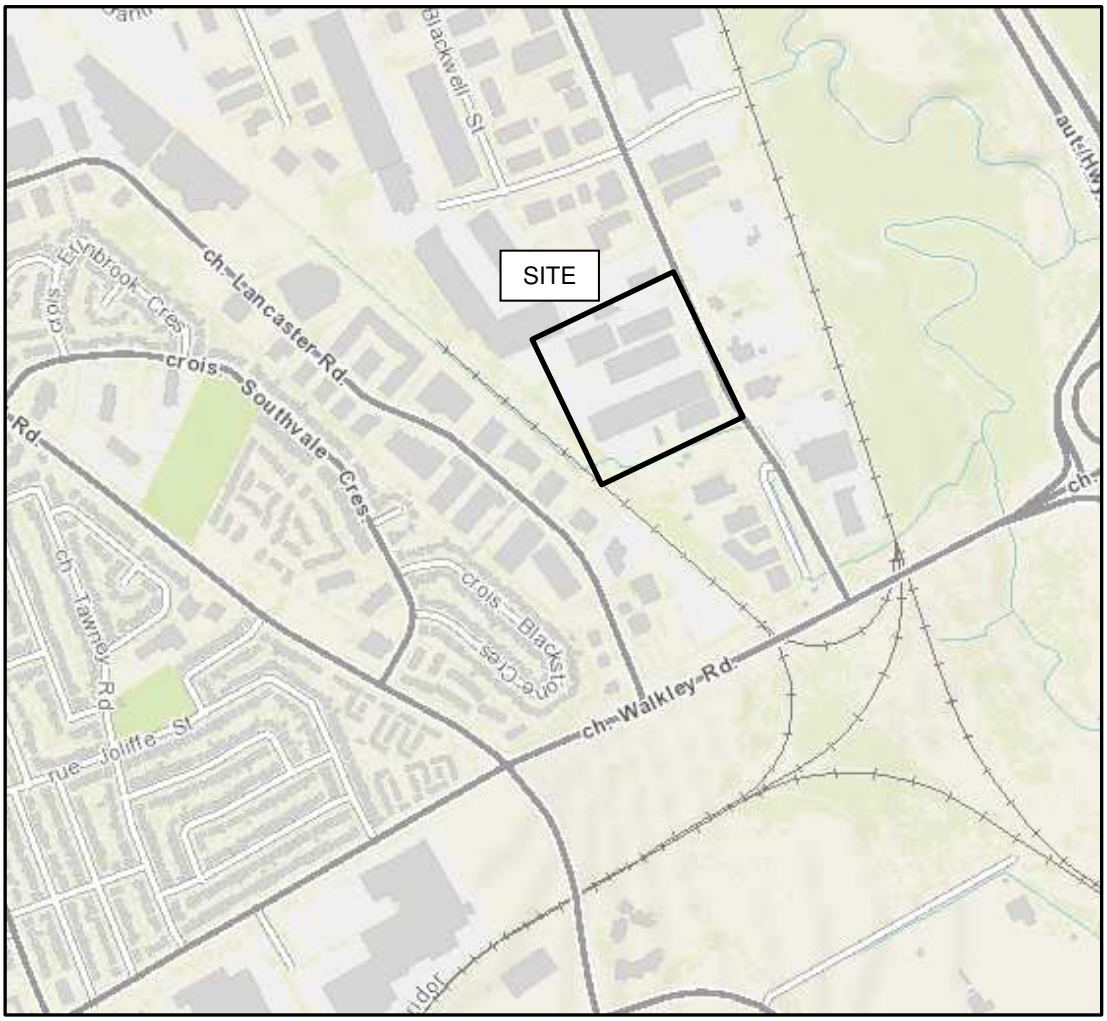

FIGURE 1

KEY PLAN

PATERSON GROUP

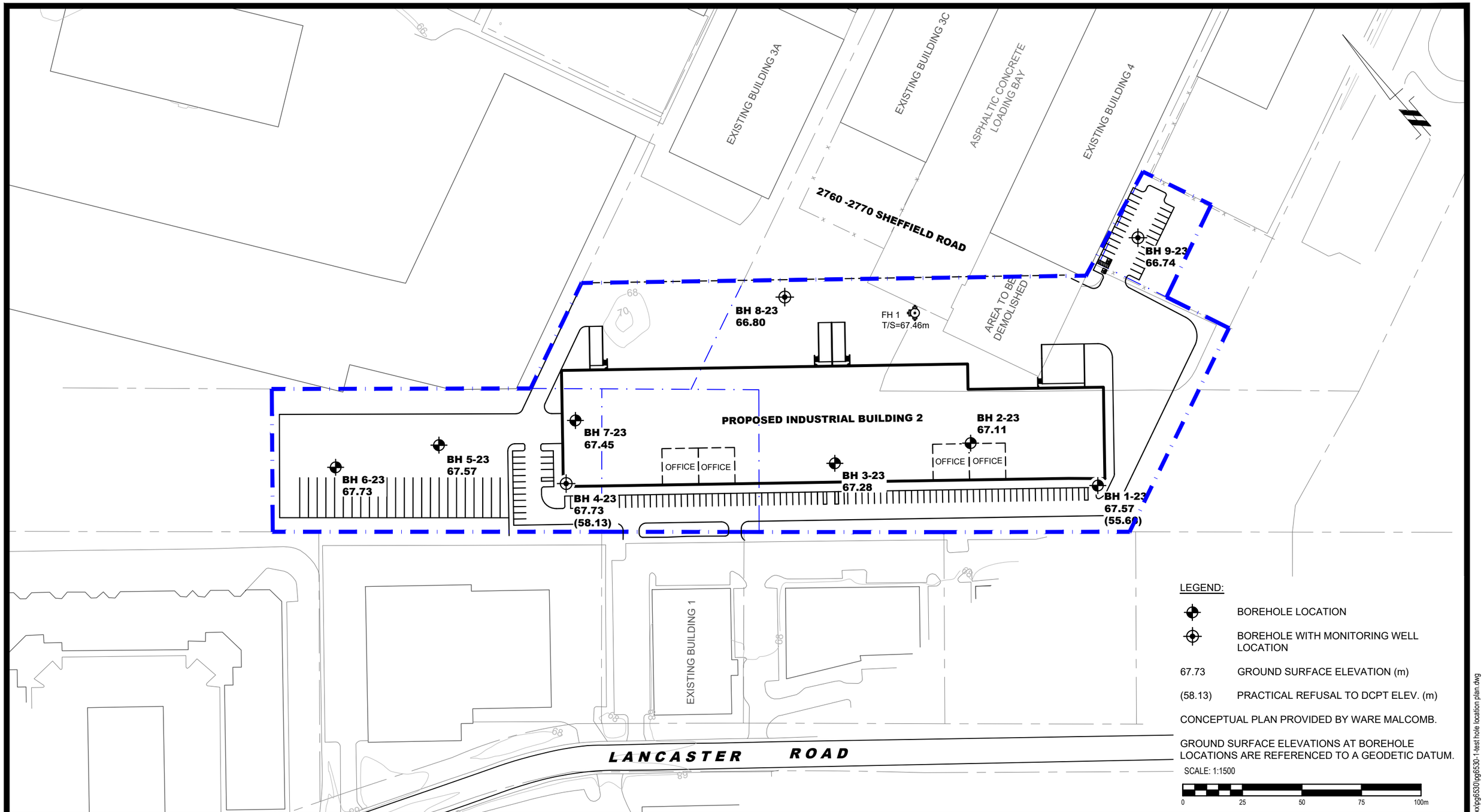

LEGEND:

- BOREHOLE LOCATION
- BOREHOLE WITH MONITORING WELL LOCATION
- 67.73 GROUND SURFACE ELEVATION (m)
- (58.13) PRACTICAL REFUSAL TO DCPT ELEV. (m)

CONCEPTUAL PLAN PROVIDED BY WARE MALCOMB.

GROUND SURFACE ELEVATIONS AT BOREHOLE LOCATIONS ARE REFERENCED TO A GEODETIC DATUM.

SCALE: 1:1500

0 25 50 75 100m

PATERSON GROUP
9 AURIGA DRIVE
OTTAWA, ON
K2E 7T9
TEL: (613) 226-7381

NO.	REVISIONS	DATE	INITIAL

RICHCRAFT HOMES

GEOTECHNICAL INVESTIGATION
PROPOSED INDUSTRIAL BUILDING
2760 - 2770 SHEFFIELD DRIVE

OTTAWA, ONTARIO

Title:

TEST HOLE LOCATION PLAN

Scale: 1:1500	Date: 01/2023
Drawn by: YA	Report No.: PG6530-1
Checked by: PB	Dwg. No.: PG6530-1
Approved by: SD	Revision No.:

p:\autocad drawings\geotechnical\pg65xx\pg6530\pg6530-1-test hole location plan.dwg

11x17

Appendix E – Supporting Documentation

2459 SHEFFIELD ROAD Sheet # 5 of 6

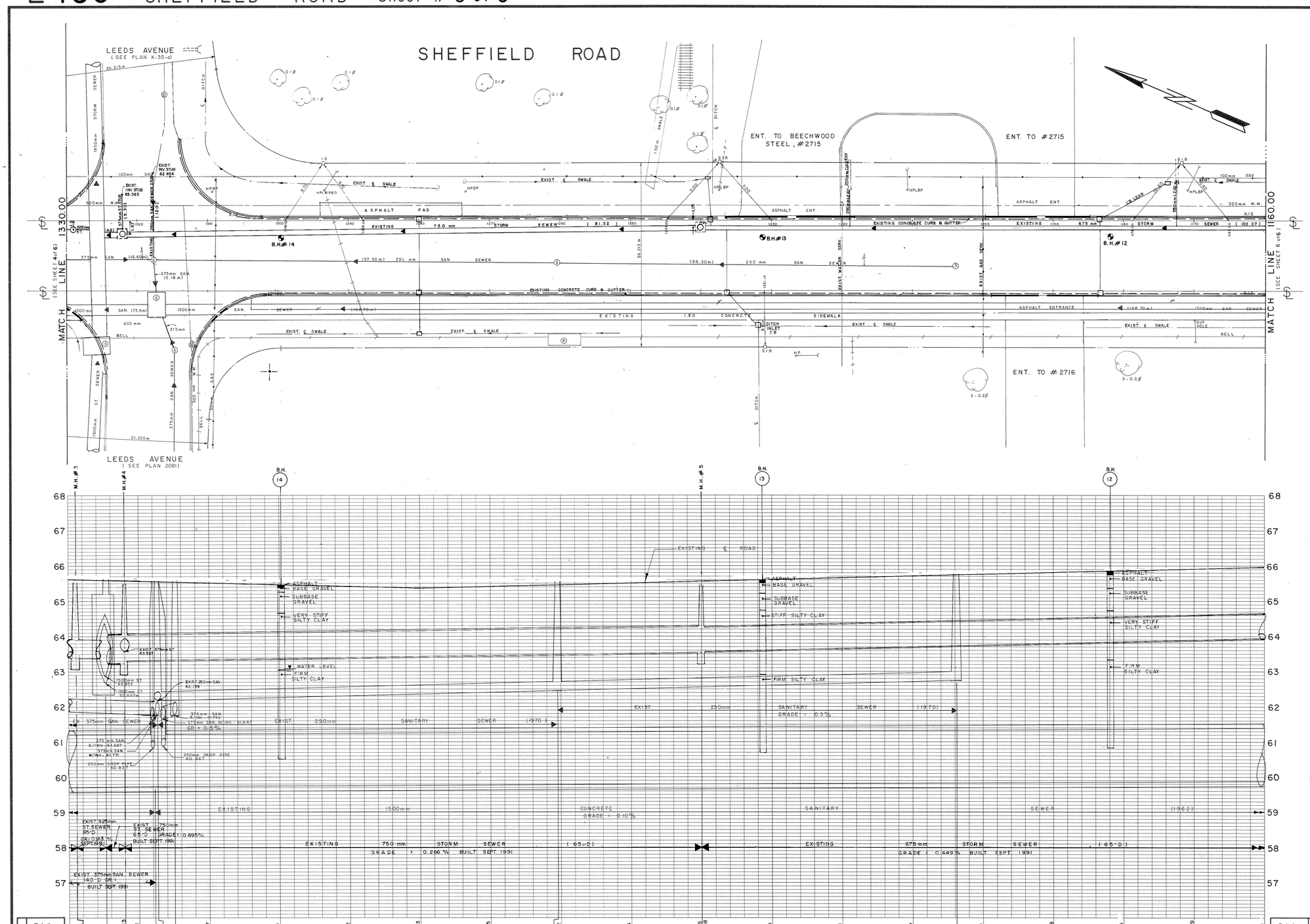

Revisions:

No.	Date	Description	Drawn By	Appr'd By

Final Measurements:

Construction Type	Storm & San. Sewer Road Rec.	Inspector	Rick Lester Bill Cardo
Work Commenced	May 1991	Instrumentman	John France
Work Completed	Sept. 1991	Field Book #	5327 5328
Contractor	Branning Const. C.A.C.E. Const.	Date	Sept. 30 1991
Drafting Revisions	Doug Mc Ewan Sept. 1991	Checked By	Oct/91

Designed By	Date	Structural Check By	Date
Survey Detail By	Date	Checked By	Date
Drafting By	Date	Checked By	Date

Chief Design & Const. Eng. — Senior Const. Coord.

LICENSED PROFESSIONAL ENGINEER PAUL E. SAUVE PROVINCE OF ONTARIO

Notes:

- Utilities shown are taken from best available records. Contractor is requested to check with all utility companies before digging.
- Soil information shown is not guaranteed and contractors are advised to collect additional soils information as deemed necessary.
- Reference bench mark:
- Proposed storm and sanitary sewers may be constructed in a common trench provided that a minimum horizontal distance of 460mm is maintained between outside barrels of pipe.
- All pipes shall conform to the Canadian Standards Association (C.S.A.), A257.2 reinforced concrete sewer pipe with approved rubber gaskets.
- A minimum of 460 mm vertical clearance to be maintained between sewers and watermains where practical.
- Borehole soil descriptions are not based on sieve analysis but on visual inspection only, except where otherwise noted.
- Soil information taken from:
- Date of television inspection:
- This plan supercedes (in whole or in part) plan no:
- Actual rock line recorded during construction of existing sewer.
- Registered plan no.:
- Caution, while illustrations and utilities shown are taken from best available information, they cannot be guaranteed.
- See additional notes on sheet # 1

When reduced, the scale of this drawing is approximately 1:400 horizontaly and 1:81 verticaly. Do not scale this plan.

City of Ville d'Ottawa

Department Of Engineering And Works
Engineering Branch
Design And Construction Division
1600 SCOTT STREET · OTTAWA ONTARIO · K1Y 4N7

Commissioner: **D. Curry** P. Eng. — Branch Director: **W.R. Cole** P. Eng.

SHEFFIELD ROAD

Contract No.:	Survey Books:	Scales:	Plan No:
91-38	4706,4761,4869, 4879,4886	HOR. 1:250 VERT. 1:50	2459 Sheet 5 of 6

2459 SHEFFIELD ROAD Sheet #6 of 6

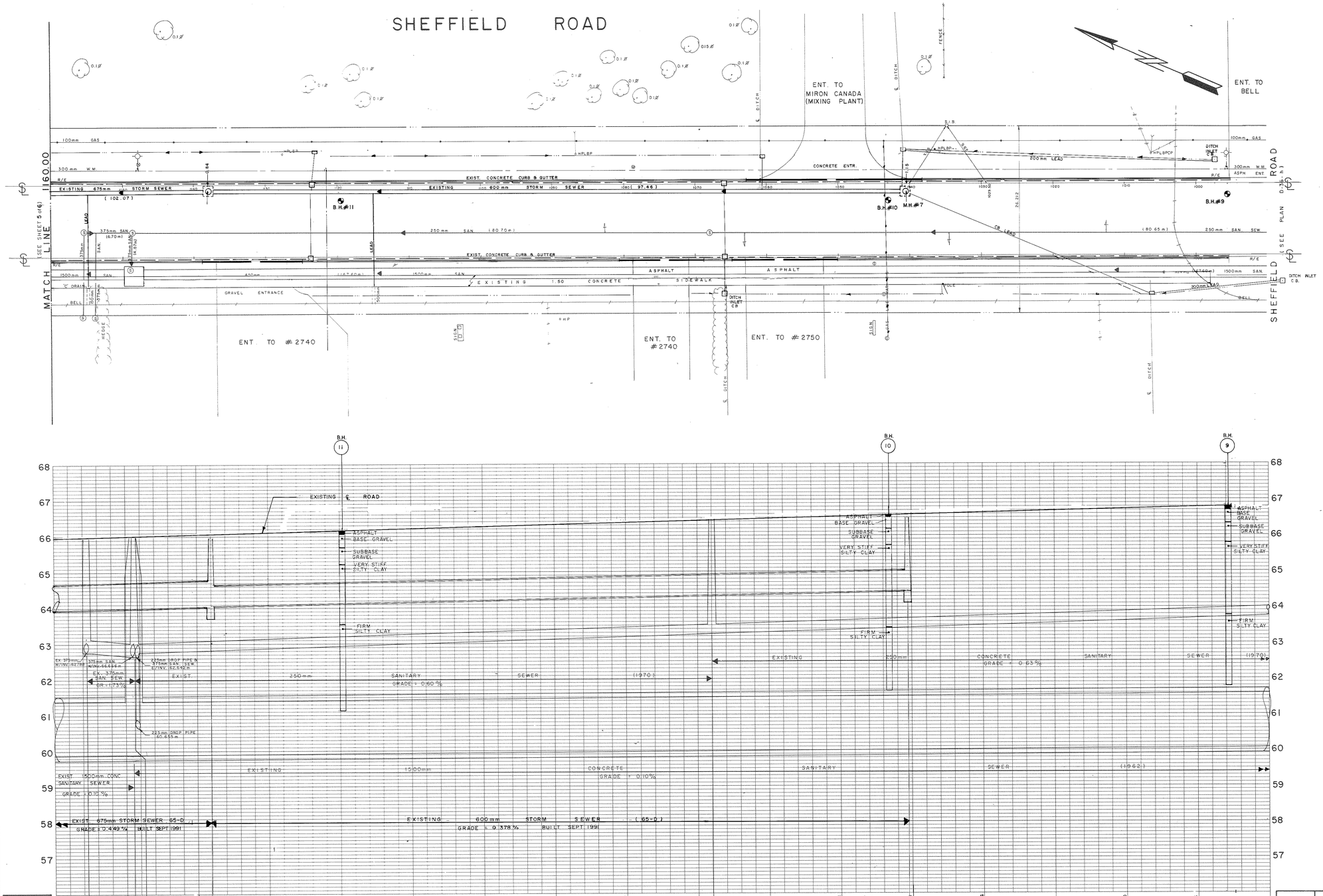

Revisions:

No.	Date	Description	Drawn By	Appr'd By

Final Measurements:

Construction Type	Storm & San. Sewer Road Rec.	Inspector	Rick Lester Bill Cardo
Work Commenced	May 1991	Instrumentman	John France
Work Completed	Sept. 1991	Field Book #	5327 5328
Contractor	Brenning Const. C.A.C.E. Const.	Date	Sept 30 1991
Drafting Revisions	Doug McEwan Sept. 1991	Checked By	Oct/91

Designed By	Date	Structural Check By	Date
Survey Detail By	Date	Checked By	Date
Drafting By	Date	Checked By	Date

Chief Design & Const. Eng. — Senior Const. Coord.

LICENSED PROFESSIONAL ENGINEER PAUL E. SAUVE PROVINCE OF ONTARIO

Notes:

- Utilities shown are taken from best available records. Contractor is requested to check with all utility companies before digging.
- Soil information shown is not guaranteed and contractors are advised to collect additional soils information as deemed necessary.
- Reference bench mark:
- Proposed storm and sanitary sewers may be constructed in a common trench provided that a minimum horizontal distance of 460mm is maintained between outside barrels of pipe.
- All pipes shall conform to the Canadian Standards Association(C.S.A.), A257.2 reinforced concrete sewer pipe with approved rubber gaskets.
- A minimum of 460 mm vertical clearance to be maintained between sewers and watermains where practical.
- Borehole soil descriptions are not based on sieve analysis but on visual inspection only, except where otherwise noted.
- Soil information taken from:
- Date of television inspection:
- This plan supercedes (in whole or in part) plan no:
- Actual rock line recorded during construction of existing sewer.
- Registered plan no:
- Caution, while illustrations and utilities shown are taken from best available information, they cannot be guaranteed.

See additional notes on sheet # 1

When reduced, the scale of this drawing is approximately 1:400 horizontaly and 1:81 verticaly. Do not scale this plan.

City of Ville d'Ottawa

Department Of Engineering And Works
Engineering Branch
Design And Construction Division
1600 SCOTT STREET · OTTAWA ONTARIO · K1Y 4N7

Commissioner: D. Curry P. Eng. — Branch Director: W.R. Cole P. Eng.

SHEFFIELD ROAD

Contract No.:	Survey Books:	Scales:	Plan No:
91 - 38	4706, 4761, 4869, 4879, 4886	HOR. 1:250 VERT. 1:50	2459 Sheet 6 of 6

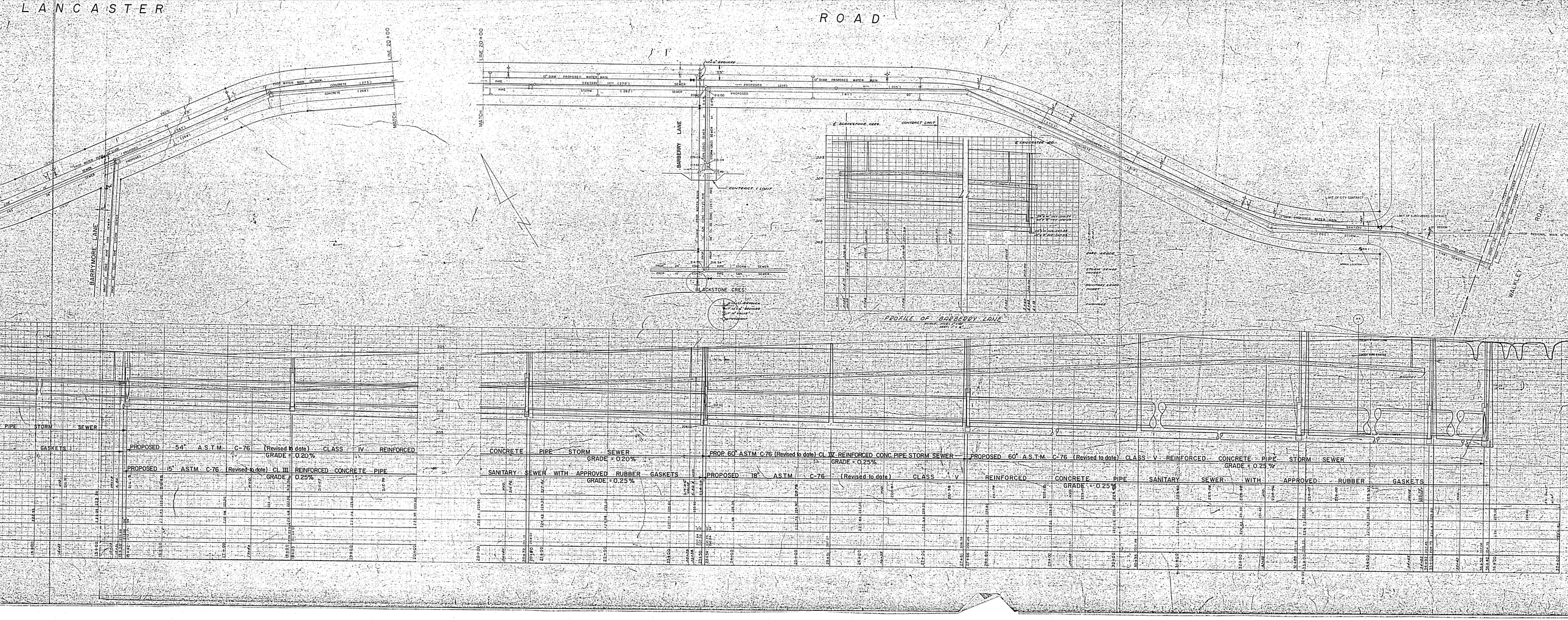
LANCASTER
ROAD
BARBERRY LANE
BLACKSTONE CRES.
WALKLEY
ROAD
PROFILE OF BARBERRY LANE
PIPE STORM SEWER
GASKETS
PROPOSED 54" A.S.T.M. C-76 (Revised to date) CLASS IV REINFORCED
GRADE = 0.20%
PROPOSED 15" A.S.T.M. C-76 (Revised to date) CL. III REINFORCED CONCRETE PIPE
GRADE = 0.25%
CONCRETE PIPE STORM SEWER
GRADE = 0.20%
PROP. 60" ASTM C-76 (Revised to date) CL. IV REINFORCED CONC. PIPE STORM SEWER
GRADE = 0.25%
PROPOSED 60" A.S.T.M. C-76 (Revised to date) CLASS V REINFORCED CONCRETE PIPE STORM SEWER
GRADE = 0.25%
SANITARY SEWER WITH APPROVED RUBBER GASKETS
GRADE = 0.25%
PROPOSED 18" A.S.T.M. C-76 (Revised to date) CLASS V REINFORCED CONCRETE PIPE SANITARY SEWER WITH APPROVED RUBBER GASKETS
GRADE = 0.25%

→ PRINT

S H E F F I E L D R O A D

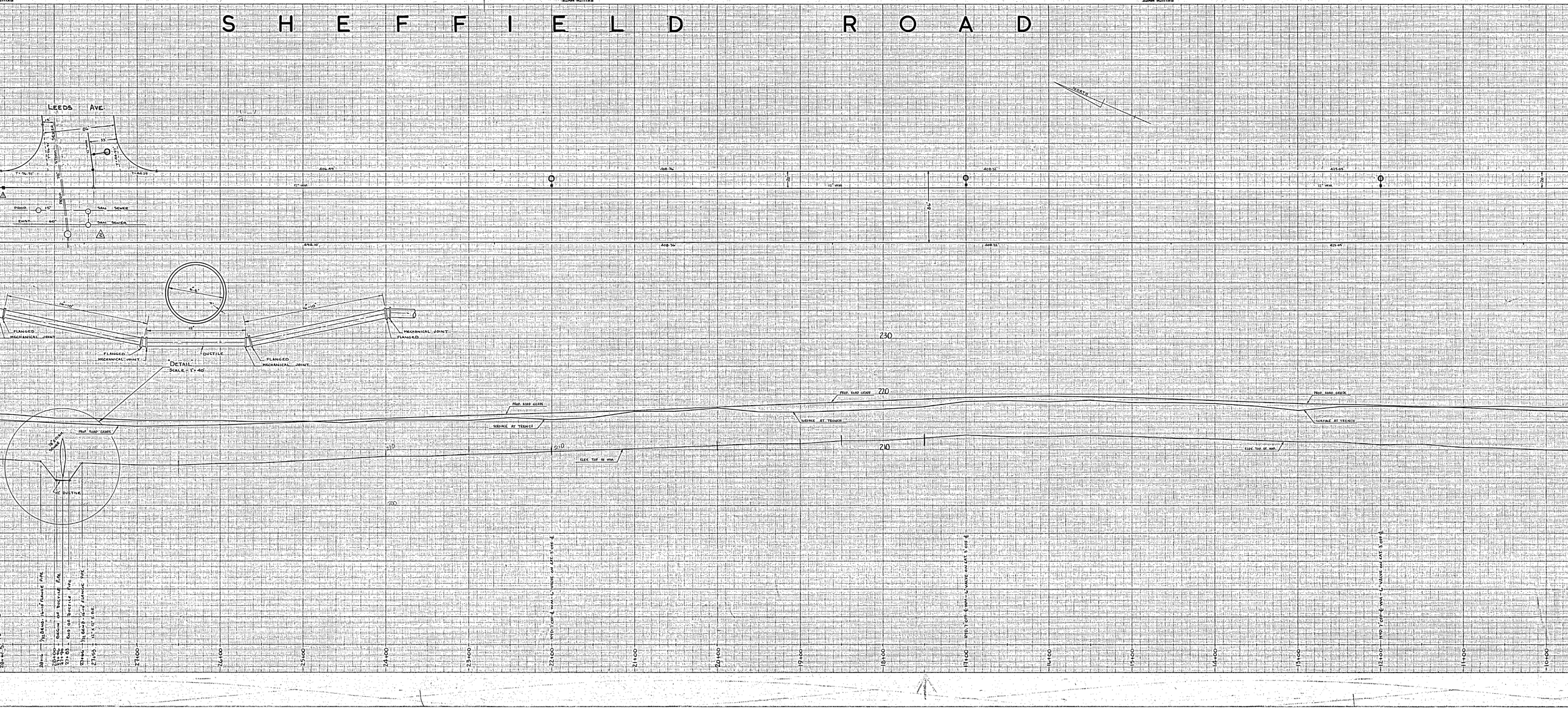

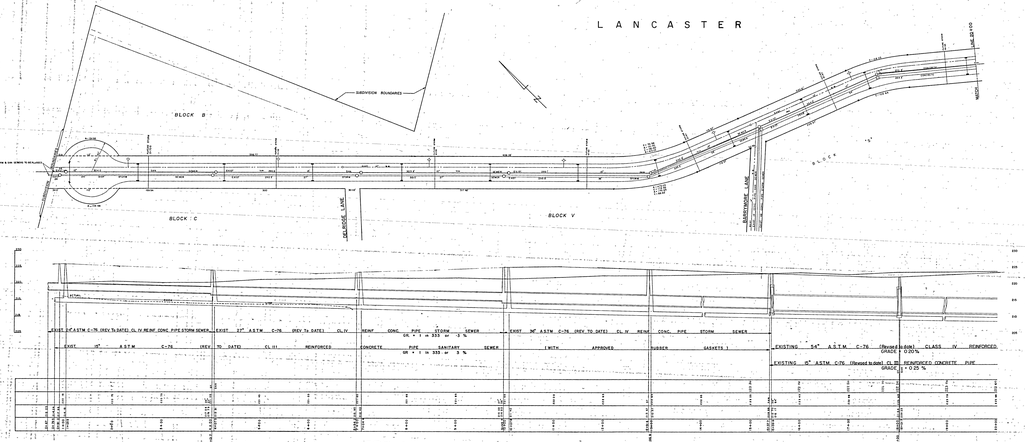

J37-3

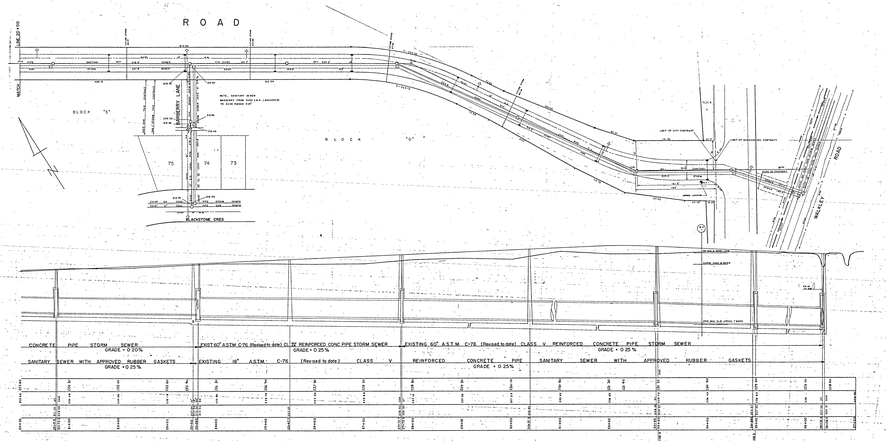

J37-2

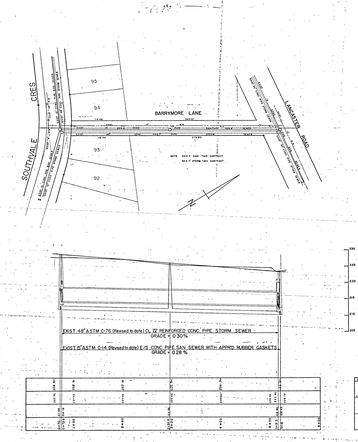

J37-1

NOTE:
BOTH STORM & SANITARY SEWERS ARE DESIGNED TO RECONSTRUCTED IN A COMMON TRENCH. 18" SANITARY SEWER SUPPLIES OF THE PIPES MUST BE MAINTAINED

FINAL MEASUREMENTS
ST. & SAN. SEWER LANCASTER RD
WORK STARTED - JUNE 25, 1971
WORK COMPLETED - JUNE 25, 1971
CONTRACTOR - STEVEN CLARK
INSPECTOR - N. SUNDAY
BOOK - 3565
PAGE
DATE - SEPT. 1971
DRAWN BY - P. TOTO - JULY 5, 1973

ROAD	
STREET	
SANITARY	
SEWER	
STORM	
SEWER	

BLOCK SIGNS	
BLOCK NO.	
SURVEYS	
DRAFT	
STATION	

CITY OF OTTAWA
DEPARTMENT OF PLANNING AND DEVELOPMENT
DIVISION A, ENGINEERING
SANITARY & STORM SEWERS
SOUTHDALE CRES. N. LANCASTER RD
LANCASTER ROAD
BARRYMORE LANE
LANCASTER RD. TO BLACKSTONE DRIVE

DESIGNED		
DRAWN		
CHECKED		
APPROVED		
DATE		
SCALE		
CITY OF OTTAWA		
DEPARTMENT OF PLANNING AND DEVELOPMENT		
DIVISION A, ENGINEERING		
SANITARY & STORM SEWERS		
SOUTHDALE CRES. N. LANCASTER RD.		
LANCASTER ROAD		
BARRYMORE LANE		
LANCASTER RD. TO BLACKSTONE DRIVE		

REVISIONS / RÉVISIONS	DATE	BY
REDRAWN FROM VOIDED UTILITY PLAN K-22-06	JULY 2007	DC
BELL - BEL10082 (JAN 2015) BELL LINE ON SHEFFIELD	OCT. 2016	KJ
CITY, ALL EXTERNAL AGENCIES DIGITIZED FROM CITY/UTILITY DATA RECEIVED	MAY 2016	KJ

LEGEND

- Water Valve, Valve Chamber, Fire Hydrant
- Sewer Manhole, Catch Basin Manhole
- Catch Basin / Drainage, Wing Wall, Head Wall
- Pole, Pole w/ light, Decorative, Lawn Light
- Power Supply, Panel, Pedestal, Transformer, Tower, Regulator (P/S, PNL, GR)
- Amp, Hand Hole, Vault, Gas Valve (HH)
- OC Transpo: Bus Shelter-No Power, Energized, Isolated (BUS)
- Streetscape: Planter Box, Grate Square, Eng. Soil (TGS)
- Traffic Connect Box / Disconnect Box, SL Disconnect
- Red Light Hand Hole, Red Light Camera
- Scada: Hand Hole, Monitoring Panel
- Reducer
- Pipe, Duct, Conduit, Lateral
- Culvert
- Ditch
- Abandoned
- Capped
- Buried Cable
- Property Line
- Install Year (2015)

TELECOM GLOSSARY

A	Allstream	P	Primus
AT	Atria	P2P	Canadian P2P Fibre
B	Bell	R	Rogers
BH	Birch Hill	S	Sprint
F	Fibre Noir	SL	Street Lighting
G	Globility	T	Traffic
GT	Group Telecom	TO	Telecom Ottawa
H	Hydro Ottawa	TU	Télus
H1	Hydro One	V	Videotron
L / L3	Level 3	Z	Zayo

GLOSSARY - OTHER

DD	Dept. of Defence	PED	Pedestal (owner unknown)
MH	Manhole (owner unknown)	PW	Public Works
O/OC	OCTranspo	UP	Utility Pole (owner unknown)
SCD	Scada		

CAUTION/ATTENTION

Although utility locations are established using the best available information, they cannot be guaranteed.
Property lines were compiled from plans and documents recorded in the Land Registry System and are for indexing purposes only.

Bien que l'emplacement des services publics soient établis en utilisant la meilleure information disponible, ils ne peuvent pas être garantis.
Des lignes de propriété ont été compilées en utilisant des plans et des documents enregistrés dans le système de cadastre et sont pour l'indexation seulement.

Ottawa

Right of Way, Heritage, and Urban Design Services /
Gestionnaire, Services des emprises, du patrimoine, et du design urbain
Planning, Infrastructure and Economic Development Department /
Direction generale de la planification, de l'infrastructure et du developpement economique
100 Constellation Cres., 6th Floor East / 6ème Étage Est, Ottawa, ON K2G 6J8

OTTAWA UTILITY COORDINATING COMMITTEE
CENTRAL REGISTRY
COMITÉ DE COORDINATION DES SERVICES PUBLICS D'OTTAWA
ENREGISTREMENT CENTRAL

UTILITY COORDINATING COMMITTEE — U C C — Ottawa — C C S P — COMITÉ DE COORDINATION DES SERVICES PUBLICS

PRODUCED BY: GIS & DATA MANAGEMENT BRANCH
INFORMATION CENTRE UNIT

SCALE: 1 : 250

SHEET NUMBER
K-22-06

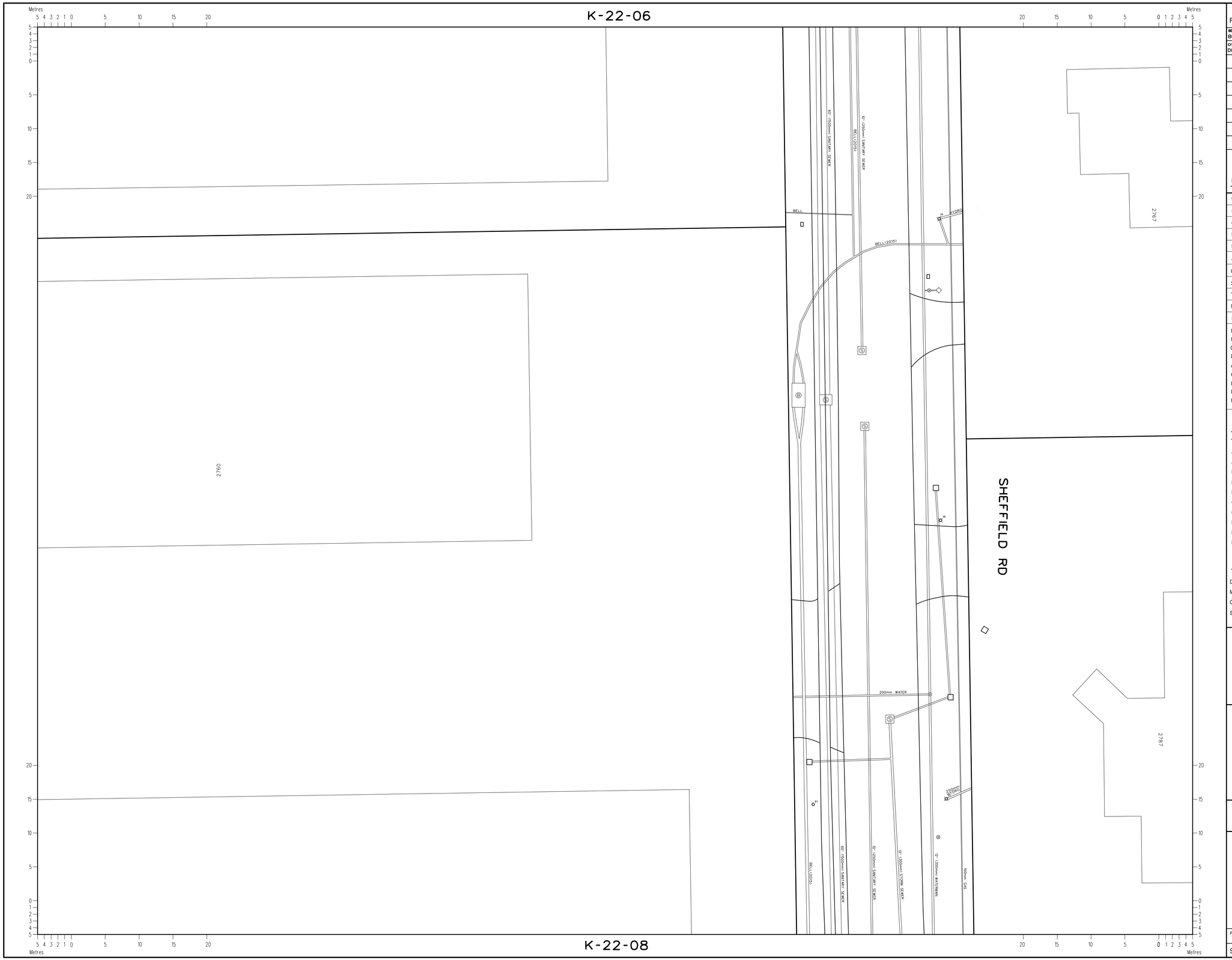

REVISIONS / RÉVISIONS	DATE	BY
BELL - BEL10082 (JAN 2015) BELL LINE ON SHEFFIELD	OCT. 2016	KJ
CITY, ALL EXTERNAL AGENCIES DIGITIZED FROM CITY/UTILITY DATA RECEIVED	OCT 2016	KJ

LEGEND

- Water Valve, Valve Chamber, Fire Hydrant
- Sewer Manhole, Catch Basin Manhole
- Catch Basin / Drainage, Wing Wall, Head Wall
- Pole, Pole w/ light, Decorative, Lawn Light
- Power Supply, Panel, Pedestal, Transformer, Tower, Regulator (P/S, PNL, PED, GR)
- Amp, Hand Hole, Vault, Gas Valve
- OC Transpo: Bus Shelter-No Power, Energized, Isolated (BUS, BUS, BUS)
- Streetscape: Planter Box, Grate Square, Eng. Soil (TGS)
- Traffic Connect Box / Disconnect Box, SL Disconnect (TCB, TDB, SDB)
- Red Light Hand Hole, Red Light Camera (THH)
- Scada: Hand Hole, Monitoring Panel
- Reducer
- Pipe, Duct, Conduit, Lateral
- Culvert
- Ditch
- Abandoned
- Capped
- Buried Cable
- Property Line
- Install Year (2015)

TELECOM GLOSSARY

A	Allstream	P	Primus
AT	Atria	P2P	Canadian P2P Fibre
B	Bell	R	Rogers
BH	Birch Hill	S	Sprint
F	Fibre Noir	SL	Street Lighting
G	Globility	T	Traffic
GT	Group Telecom	TO	Telecom Ottawa
H	Hydro Ottawa	TU	Telus
H1	Hydro One	V	Videotron
L / L3	Level 3	Z	Zayo

GLOSSARY - OTHER

DD	Dept. of Defence	PED	Pedestal (owner unknown)
MH	Manhole (owner unknown)	PW	Public Works
O/OC	OCTranspo	UP	Utility Pole (owner unknown)
SCD	Scada		

CAUTION/ATTENTION

Although utility locations are established using the best available information, they cannot be guaranteed.
Property lines were compiled from plans and documents recorded in the Land Registry System and are for indexing purposes only.

Bien que l'emplacement des services publics soient établis en utilisant la meilleure information disponible, ils ne peuvent pas être garantis.
Des lignes de propriété ont été compilées en utilisant des plans et des documents enregistrés dans le système de cadastre et sont pour l'indexation seulement.

Ottawa

Right of Way, Heritage, and Urban Design Services /
Gestionnaire, Services des emprises, du patrimoine, et du design urbain
Planning, Infrastructure and Economic Development Department /
Direction generale de la planification, de l'infrastructure et du developpement economique
100 Constellation Cres., 6th Floor East / 6ème Étage Est, Ottawa, ON K2G 6J8

OTTAWA UTILITY COORDINATING COMMITTEE
CENTRAL REGISTRY
COMITÉ DE COORDINATION DES SERVICES PUBLICS D'OTTAWA
ENREGISTREMENT CENTRAL

UTILITY COORDINATING COMMITTEE — UCC — Ottawa — CCSP — COMITÉ DE COORDINATION DES SERVICES PUBLICS

PRODUCED BY: GIS & DATA MANAGEMENT BRANCH
INFORMATION CENTRE UNIT

SCALE: 1:250

SHEET NUMBER
K-22-07

REVISIONS / RÉVISIONS	DATE	BY
CITY, ALL EXTERNAL AGENCIES DIGITIZED FROM CITY/UTILITY DATA RECEIVED	OCT. 2016	KJ
BELL - MC V08683-1(DEC. 2008) BPED ON SHEFFIELD	OCT. 2016	KJ
BELL - BEL10082 (JAN 2015) BELL LINE ON SHEFFIELD	OCT. 2016	KJ

LEGEND

- Water Valve, Valve Chamber, Fire Hydrant
- Sewer Manhole, Catch Basin Manhole
- Catch Basin / Drainage, Wing Wall, Head Wall
- Pole, Pole w/ light, Decorative, Lawn Light
- Power Supply, Panel, Pedestal, Transformer, Tower, Regulator (P/S, PNL, GR)
- Amp, Hand Hole, Vault, Gas Valve
- OC Transpo: Bus Shelter-No Power, Energized, Isolated (BUS, BUS, BUS)
- Streetscape: Planter Box, Grate Square, Eng. Soil (TGS)
- Traffic Connect Box / Disconnect Box, SL Disconnect (TCB, TDB, SDB)
- Red Light Hand Hole, Red Light Camera (THH)
- Scada: Hand Hole, Monitoring Panel
- Reducer
- Pipe, Duct, Conduit, Lateral
- Culvert
- Ditch
- Abandoned
- Capped
- Buried Cable
- Property Line
- Install Year (2015)

TELECOM GLOSSARY

A	Allstream	P	Primus
AT	Atria	P2P	Canadian P2P Fibre
B	Bell	R	Rogers
BH	Birch Hill	S	Sprint
F	Fibre Noir	SL	Street Lighting
G	Globility	T	Traffic
GT	Group Telecom	TO	Telecom Ottawa
H	Hydro Ottawa	TU	Telus
H1	Hydro One	V	Videotron
L / L3	Level 3	Z	Zayo

GLOSSARY - OTHER

DD	Dept. of Defence	PED	Pedestal (owner unknown)
MH	Manhole (owner unknown)	PW	Public Works
O/OC	OCTranspo	UP	Utility Pole (owner unknown)
SCD	Scada		

CAUTION/ATTENTION

Although utility locations are established using the best available information, they cannot be guaranteed.
Property lines were compiled from plans and documents recorded in the Land Registry System and are for indexing purposes only.

Bien que l'emplacement des services publics soient établis en utilisant la meilleure information disponible, ils ne peuvent pas être garantis.
Des lignes de propriété ont été compilées en utilisant des plans et des documents enregistrés dans le système de cadastre et sont pour l'indexation seulement.

Ottawa

Right of Way, Heritage, and Urban Design Services /
Gestionnaire, Services des emprises, du patrimoine, et du design urbain
Planning, Infrastructure and Economic Development Department /
Direction generale de la planification, de l'infrastructure et du developpement economique
100 Constellation Cres., 6th Floor East / 6ème Étage Est, Ottawa, ON K2G 6J8

OTTAWA UTILITY COORDINATING COMMITTEE
CENTRAL REGISTRY

COMITÉ DE COORDINATION DES SERVICES PUBLICS D'OTTAWA
ENREGISTREMENT CENTRAL

UTILITY COORDINATING COMMITTEE UCC Ottawa CCSP COMITÉ DE COORDINATION DES SERVICES PUBLICS

PRODUCED BY: GIS & DATA MANAGEMENT BRANCH
INFORMATION CENTRE UNIT

SCALE: 1 : 250

SHEET NUMBER
K-22-08

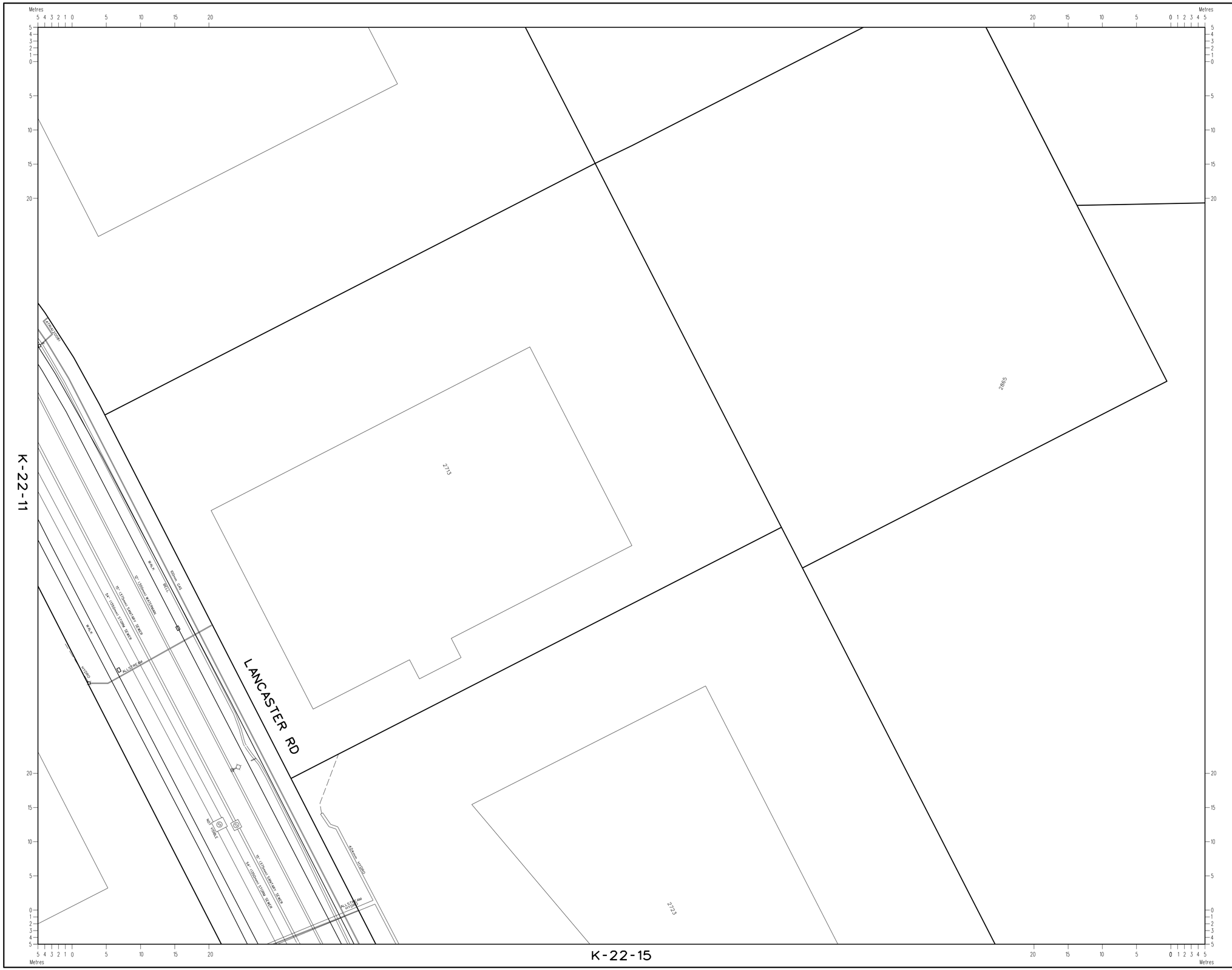

REVISIONS / RÉVISIONS	DATE	BY
REDRAWN FROM VOIDED UTILITY PLAN K-22-13	JULY 2007	DC
TELECOM OTTAWA - TOL06076 (OCT. 2003) ALLSTREAM CONDUIT ADDED TO LANCASTER	JULY 2007	DC
HYDRO,BELL,ENBRIDGE,ROGERS, CITY SEWER, WATER, TRAFFIC, SL DIGITIZED FROM DATA RECEIVED	JUNE 2008	
ALLSTREAM FEB. 28/07 ALLSTREAM-FIBREOPTIC ADDED TO LANCASTER	OCT.30/08	KJ
ROGERS - ROG181515/9(2018) ROGERS CONDUIT ADDED TO LANCASTER	OCT 2021	KJ
TOL08117 - LANCASTER RD. (2008) ATRIA - CONDUIT INSTALLED	OCT 2021	KJ

LEGEND

- Water Valve, Valve Chamber, Fire Hydrant
- Sewer Manhole, Catch Basin Manhole
- Catch Basin / Drainage, Wing Wall, Head Wall
- Pole, Pole w/ light, Decorative, Lawn Light
- Power Supply, Panel, Pedestal, Transformer, Tower, Regulator (P/S, PNL, GR)
- Amp, Hand Hole, Vault, Gas Valve (HH)
- OC Transpo: Bus Shelter-No Power, Energized, Isolated (BUS, BUS, BUS)
- Streetscape: Planter Box, Grate Square, Eng. Soil (TGS)
- Traffic Connect Box / Disconnect Box, SL Disconnect (TCB, TDB, SCB)
- Red Light Hand Hole, Red Light Camera (THH)
- Scada: Hand Hole, Monitoring Panel
- Reducer
- Pipe, Duct, Conduit, Lateral
- Culvert
- Ditch
- Abandoned
- Capped
- Buried Cable
- Property Line
- Install Year (2015)

TELECOM GLOSSARY

A	Allstream	P	Primus
AT	Atria	P2P	Canadian P2P Fibre
B	Bell	R	Rogers
BH	Birch Hill	S	Sprint
F	Fibre Noir	SL	Street Lighting
G	Globility	T	Traffic
GT	Group Telecom	TO	Telecom Ottawa
H	Hydro Ottawa	TU	Télus
H1	Hydro One	V	Videotron
L / L3	Level 3	Z	Zayo

GLOSSARY - OTHER

DD	Dept. of Defence	PED	Pedestal (owner unknown)
MH	Manhole (owner unknown)	PW	Public Works
O/OC	OCTranspo	UP	Utility Pole (owner unknown)
SCD	Scada		

CAUTION/ATTENTION

Although utility locations are established using the best available information, they cannot be guaranteed.
Property lines were compiled from plans and documents recorded in the Land Registry System and are for indexing purposes only.

Bien que l'emplacement des services publics soient établis en utilisant la meilleure information disponible, ils ne peuvent pas être garantis.
Des lignes de propriété ont été compilées en utilisant des plans et des documents enregistrés dans le système de cadastre et sont pour l'indexation seulement.

Ottawa

Right of Way, Heritage, and Urban Design Services /
Gestionnaire, Services des emprises, du patrimoine, et du design urbain
Planning, Infrastructure and Economic Development Department /
Direction generale de la planification, de l'infrastructure et du developpement economique
100 Constellation Cres., 6th Floor East / 6ème Étage Est, Ottawa, ON K2G 6J8

OTTAWA UTILITY COORDINATING COMMITTEE
CENTRAL REGISTRY
COMITÉ DE COORDINATION DES SERVICES PUBLICS D'OTTAWA
ENREGISTREMENT CENTRAL

UTILITY COORDINATING COMMITTEE — U C C — Ottawa — C C S P — COMITÉ DE COORDINATION DES SERVICES PUBLICS

PRODUCED BY: GIS & DATA MANAGEMENT BRANCH
INFORMATION CENTRE UNIT

SCALE: 1:250

SHEET NUMBER
K-22-13