2946 BASELINE ROAD SERVICING AND STORMWATER MANAGEMENT REPORT

July 19, 2024

Prepared for:
11034936 Canada Inc.

Prepared by:
Stantec Consulting Ltd.

Project Number:
160401676

Revision	Description	Author	Date	Quality Check	Date	Independent Review	Date
0	SPA 1st Submission	P.Mott	5/25/2023	R.Brandrick	5/25/2023	K.Kilborn	5/25/2023
1	SPA 2nd Submission	M.Wu R.Brandrick	7/11/2024	R.Brandrick D.Thiffault	7/17/2024	K.Kilborn	7/19/2024

The conclusions in the Report titled 2946 Baseline Road Servicing and Stormwater Management Report are Stantec's professional opinion, as of the time of the Report, and concerning the scope described in the Report. The opinions in the document are based on conditions and information existing at the time the scope of work was conducted and do not take into account any subsequent changes. The Report relates solely to the specific project for which Stantec was retained and the stated purpose for which the Report was prepared. The Report is not to be used or relied on for any variation or extension of the project, or for any other project or purpose, and any unauthorized use or reliance is at the recipient's own risk.

Stantec has assumed all information received from 11034936 Canada Inc. (the "Client") and third parties in the preparation of the Report to be correct. While Stantec has exercised a customary level of judgment or due diligence in the use of such information, Stantec assumes no responsibility for the consequences of any error or omission contained therein.

This Report is intended solely for use by the Client in accordance with Stantec's contract with the Client. While the Report may be provided by the Client to applicable authorities having jurisdiction and to other third parties in connection with the project, Stantec disclaims any legal duty based upon warranty, reliance or any other theory to any third party, and will not be liable to such third party for any damages or losses of any kind that may result.

Prepared By: _____

Michael Wu, EIT

Reviewed By: _____

Rob Brandrick, P.Eng.

LICENSED PROFESSIONAL ENGINEER
R. J. B. BRANDRICK
100570025
July 19 2024
PROVINCE OF ONTARIO

Approved By: _____

Kris Kilborn

Table of Contents

1.0 INTRODUCTION 1.1
1.1 Project Information 1.1
1.2 Regulatory Framework 1.2
1.2.1 Supporting Information 1.2
1.3 Objective 1.3

2.0 WATER SERVICING 2.1
2.1 Background 2.1
2.2 Design Criteria 2.1
2.2.1 Water Demand and Allowable Pressure 2.1
2.2.2 Fire Flow and Hydrant Capacity 2.2
2.3 Water Demand 2.2
2.3.1 Domestic Water Demand 2.2
2.3.2 Fire Flow Demand 2.2
2.4 Level of Service 2.3
2.4.1 Boundary Conditions 2.3
2.4.2 Allowable Domestic Pressures 2.3
2.4.3 Allowable Fire Flow Pressure 2.4
2.4.4 Fire Hydrant Coverage 2.4
2.5 Proposed Water Servicing 2.4

3.0 WASTEWATER SERVICING 3.1
3.1 Background 3.1
3.2 Design Criteria 3.1
3.3 Wastewater Generation and Servicing Design 3.1
3.4 Proposed Sanitary Servicing 3.2

4.0 STORMWATER MANAGEMENT AND SERVICING 4.1
4.1 Background 4.1
4.2 Design Criteria 4.1
4.3 Existing Conditions 4.1
4.4 Stormwater Management Design 4.2
4.4.1 Allowable Release Rate 4.2
4.4.2 Quantity Control 4.4
4.4.3 Quality Control 4.5
4.5 Proposed Stormwater Servicing 4.6

5.0 OTHER CONSIDERATIONS 5.1
5.1 Site Grading 5.1
5.2 Geotechnical 5.1
5.3 Utilities 5.1
5.4 Erosion and Sediment Control During Construction 5.1
5.5 Regulatory Approvals 5.2

6.0 CLOSING 6.1

LIST OF TABLES

Table 1.1: Unit Type Breakdown 1.2
Table 2.1: Estimated Water Demands 2.2
Table 2.2: Boundary Conditions 2.3
Table 3.1 - Estimated Total Wastewater Peak Flow 3.2
Table 4-1: Summary of Post-Development Drainage Areas 4.2
Table 4-2: Allowable Release Rate 4.3
Table 4-3: Peak Uncontrolled 5-Year and 100-Year Run-Off 4.4
Table 4-4: 5-Year and 100-Year Storage Requirement 4.4
Table 4-5: Estimated Post-Development Discharge 4.5

LIST OF FIGURES

Figure 1-1: Key Plan of Site 1.1

LIST OF APPENDICES

APPENDIX A BACKGROUND INFORMATION A.1
A.1 Site Plan and Statistics A.1
A.2 Building Construction Confirmation A.2

APPENDIX B CITY COMMENTS B.1

APPENDIX C WATER DEMAND C.1
C.1 Domestic Water Demand C.1
C.2 Fire Flow Demands (FUS 2020) C.2
C.3 Boundary Conditions C.3

APPENDIX D SANITARY D.1
D.1 Sanitary Sewer Design Sheet D.1
D.2 Sanitary Sewer Capacity Confirmation D.2

APPENDIX E STORMWATER SERVICING E.1
E.1 Novatech 2015 SWM Plan and Analysis E.1
E.2 Storm Sewer Analysis E.2

1.0 Introduction

1.1 Project Information

This report is prepared to describe the servicing and stormwater management approach in support of a Zoning By-Law Amendment (ZBA) and Site Plan Control (SPC) application for the proposed development located at 2940 and 2946 Baseline Road Baseline Road in the Briar Green – Leslie Park neighbourhood of the City of Ottawa.

2940 Baseline Road is currently zoned GM [2138] S325 and is undeveloped. 2946 Baseline Road is currently zoned GM [2138] S325-h and developed as an existing commercial mall with surface parking.

The proposed development is bound by Baseline Road to the north, existing business and residential development to the east, existing residential development to the south, and Sandcastle Drive to the west. An illustration of the development location is illustrated in **Figure 1-1** below.

Figure 1-1: Key Plan of Site

2940 Baseline Road is part of the approved SPC application D07-12-14-0198 (also includes 2942 and 2944 Baseline Road). However, this approved application is being partially superseded by the current SPC application (D02-02-23-0046 and D07-12-23-0073). Amendments to the approved SPC application are being coordinated and submitted separately from the current SPC application.

A copy of the proposed Site Plan (dated June 21, 2024) prepared by Neuf Architect(e)s architects is provided in **Appendix A.1**.

The size of the proposed development boundary under the current SPC application is 1.6 ha. The development plan includes three residential building towers with ground level commercial space, and a common underground parking space supporting all three towers. The development is intended to proceed in three phases. Carrying forward from the approved SPC application (Phase 1 complete and Phase 2 under construction), Phase 3-4 is a 9-storey tower, Phase 5 is a 28-storey tower, and Phase 6 is a 32-storey tower.

A public park space of 0.12 ha is proposed to be provided from the overall total site area at the southwest corner of the site.

The proposed unit type breakdown unit type breakdown is listed in **Table 1.1** below.

Table 1.1: Unit Type Breakdown

Unit Type	Tower 3-4	Tower 5	Tower 6	Total
Bachelor	16	115	28	**159**
One-bedroom	228	122	158	**508**
Two-bedroom	40	50	121	**211**
Three-bedroom	-	6	4	**10**
Residential Total	**284**	**293**	**311**	**888**
Commercial (m^2)	**1025**	**312**	**844**	**2181**

The unit type breakdown is based on the proposed development statistics as provided by the project architect. A copy of the proposed development statistics is provided in **Appendix A.1**.

1.2 Regulatory Framework

The proposed development is governed by the City of Ottawa's current Official Plan and applicable development application requirements.

The pre-application consultation process with the City of Ottawa establishes design criteria specific to the proposed development site.

1.2.1 SUPPORTING INFORMATION

Supporting documents referenced in support of this report include:

- *City of Ottawa Sewer Design Guidelines* (SDG), City of Ottawa, October 2012, including all subsequent technical bulletins
- *City of Ottawa Design Guidelines – Water Distribution*, City of Ottawa, July 2010, including all subsequent technical bulletins
- *Design Guidelines for Drinking Water Systems*, Ministry of the Environment, Conservation, and Parks (MECP), 2008
- *Fire Protection Water Supply Guideline* for Part 3 in the Ontario Building Code, Office of the Fire Marshal (OFM), October 2020
- *Water Supply for Public Fire Protection*, Fire Underwriters Survey (FUS), 2020
- *Fire Code*, National Fire Protection Agency, 2012
- Zoning By-Law Amendment & Site Plan Control Applications – 2946 Baseline Road – 1st Review Comments, File Number: D02-02-23-0046 & D07-12-23-0073 as provided by the City of Ottawa staff (see **Appendix B**).
- *2940/2946/2948 Baseline Road Development Servicing and Stormwater Management Report,* Novatech, Revised December 18, 2015
- *Geotechnical Investigation – Proposed Multi-Storey Building – Tower 4 to 6, 2946 Baseline Road, Ottawa, Ontario,* Paterson Group Inc., March 24, 2022

Details of the existing infrastructure located within the adjacent public roads are obtained from available City of Ottawa as-built records.

1.3 Objective

This site servicing and stormwater management (SWM) report assesses and identifies the site servicing and stormwater management (SWM) conditions which are generally consistent with City of Ottawa Design Guidelines and considers related pre-consultation advice provided by City of Ottawa staff.

The general and applicable site-specific objectives considered are summarized below. Specific technical design criteria details are described in the associated servicing sections of this report.

Potable Water Servicing

- Develop an assessment of the potable water and fire flow demand for the site.
- Identify that the City of Ottawa water distribution system can supply adequate water pressure to the site for typical operational and emergency conditions.

Wastewater (Sanitary Sewer) Servicing

- Develop an assessment of the wastewater flow projected for the site.

- Identify that the City of Ottawa sanitary sewer system can support the project wastewater flow from the site.

Storm Sewer Servicing and Stormwater Management

- Identify allowable flow contributions from the site to the City of Ottawa storm sewer (minor) and adjacent surface (major) drainage systems.
- Identify applicable water quality control and water balance control targets.
- Develop an assessment of the SWM system for the site to achieve applicable water quantity (minor and major system) control, water quality control, and water balance control targets.

Site Grading Plan

- Prepare a grading plan to support the servicing assessments and identify compatibility with surrounding existing ground conditions.

The accompanying figures and drawings illustrate the key components of the current servicing assessments.

2.0 Water Servicing

2.1 Background

The site is within Pressure Zone 2W2C of the City of Ottawa's Water Distribution System.

The existing public watermains along the boundaries of the site consists of a 1200 mm diameter C01 watermain in Baseline Road, and a 200 mm diameter ductile iron watermain in Sandcastle Drive.

Existing fire hydrants are located along Sandcastle Drive, three hydrants are immediately adjacent to the proposed development boundary.

2.2 Design Criteria

The following design criteria are applied to the assessment of the potable water and fire protection servicing for the site.

2.2.1 WATER DEMAND AND ALLOWABLE PRESSURE

The domestic water demand and allowable water pressure are assessed using the City of Ottawa Water Distribution Guidelines (2010) as amended, and the ISTB 2021-03 Technical Bulletin.

Residential Apartment Population Rate	
Bachelor and 1 Bedroom	1.4 persons / unit
2 Bedroom	2.1 persons / unit
3 Bedroom	3.1 persons / unit

Residential Apartment Demand	
Average Daily (AVDY)	280 L/cap/day
Maximum Daily (MXDY)	2.5 x AVDY
Peak Hour (PKHR)	2.2 x MXDY

Allowable Water Pressure	
MXDY Flow	345 kPa (50 psi) to 552 kPa (80 psi)
PKHR Flow Minimum	276 kPa (40 psi.)
MXDY + Fire Flow	140 kPa (20 psi.)
Maximum Allowable for Occupied Area	552 kPa (80 psi)

2.2.2 FIRE FLOW AND HYDRANT CAPACITY

Detailed fire flow requirements are assessed using the Fire Underwriters Survey (FUS) methodology (2020). Site specific criteria considered are noted in Section 2.3.2.

Fire hydrant capacity is assessed based on Table 18.5.4.3 of the National Fire Protection Agency (NFPA) Fire Code document. A hydrant situated less than 76 m away from a building can supply a maximum capacity of 5,678 L/min, and a hydrant 76 to less than 152 m away can supply a maximum capacity of 3,785 L/min.

2.3 Water Demand

2.3.1 DOMESTIC WATER DEMAND

The domestic water demand is assessed based on the proposed development conditions described in **Table 1.1** and the design criteria described in **Section 2.2**.

The assessed domestic water demand for the site is summarized in **Table 2.1.** Supporting calculations are provided in **Appendix C.1**.

Table 2.1: Estimated Water Demands

Phase / Tower	Commercial Area (m^2)	Population	AVDY (L/s)	MXDY (L/s)	PKHR (L/s)
3-4	1025	426	1.4	3.5	7.7
5	312	455	1.5	3.7	8.1
6	844	527	1.7	4.3	9.5
Total	**2181**	**1408**	**4.6**	**11.5**	**25.3**
Total may vary from sum of individual values due to rounding in calculations					

2.3.2 FIRE FLOW DEMAND

Based on the proposed development plan, the fire flow requirement is calculated in accordance with Fire Underwriters Survey (FUS) methodology. The building statistics used for the floor areas are included in **Appendix A.1**. Confirmation of the intended building construction, as provided by the project architect, is included in **Appendix A.2**.

The fire flow demand is assessed based on the following.

- Type II - Noncombustible Construction / Type IV-A - Mass Timber Construction (i.e., building construction materials with a 1-hour fire resistance rating as per Section 3.2.2.53 of the Ontario Building Code).
- Total effective building area is the gross floor area of the largest floor plus 25% of the floor area for each of the two immediately adjoining floors.

  - Vertical openings are protected.

- Occupancy and contents factor considering non-combustible materials.
- A fully supervised automatic sprinkler system that conforms to the NFPA 13 standard supplied by a standard water supply.
- Exposure distances based on current adjacent structures having Type V (no fire resistance rating) construction with no firewall or sprinkler systems.

The fire flow is assessed to be approximately 10,000 L/min (167 L/s) based on the results for Phase / Tower 34. Supporting calculations per the FUS methodology are provided in **Appendix C.2**.

2.4 Level of Service

2.4.1 BOUNDARY CONDITIONS

The assessed domestic water and fire flow demands are used to confirm the level of servicing available to the proposed development from the adjacent municipal watermain and hydrants. The associated hydraulic grade line (HGL) elevation boundary conditions provided by the City of Ottawa are summarized in **Table 2.2** (see **Appendix C.3** for correspondence).

Table 2.2: Boundary Conditions

HGL Condition	Elevation (m) at Connection Location		
	Baseline Road	Sandcastle Drive 1	Sandcastle Drive 2
Minimum HGL (m)	126.7		
Maximum HGL (m)	133.0		
Max. Day + Fire Flow (167 L/s) HGL(m)	129.5	120.6	122.7

The boundary condition request and confirmation is based on higher population and flow rate data than what is presented in **Table 2.1**. No update to the boundary conditions is made on the basis that the original request represents a more conservative condition relative to the current design intent.

2.4.2 ALLOWABLE DOMESTIC PRESSURES

The proposed finished floor elevations of Tower 3-4, Tower 5, and Tower 6 are 80.75 m, 79.60 m, and 78.70 m, respectively. These elevations serve as the first-floor elevation for the calculation of residual pressures at ground level. From the boundary condition HGL elevations, the pressures at the first-floor level are expected to range from 450 kPa to 512 kPa (65 psi to 74 psi**)** under normal operating conditions. The first-floor pressure is expected to be below the maximum allowable for occupied areas. The domestic pressure calculations are included in **Appendix C.3**.

Given the length of the private water main, the connection to a 1200 mm watermain, and the overall proximity to the adjacent public system a water main analysis is not completed.

To ensure adequate water pressure above the first-floor elevation, booster pump requirements are to be confirmed by the mechanical engineering consultant during subsequent stages of the development application process.

2.4.3 ALLOWABLE FIRE FLOW PRESSURE

From the boundary condition HGL elevations, the watermains and nearby fire hydrants can provide the required fire flow while maintaining the minimum residual pressure of 138 kPa (20 psi). The fire flow pressure calculations are included with the domestic pressure calculations in **Appendix C.3**.

2.4.4 FIRE HYDRANT COVERAGE

As noted in Section 2.1, three existing fire hydrants are located along Sandcastle Drive immediately adjacent to the proposed development boundary.

As part of the servicing plan, two additional hydrants within the overall development plan are proposed. The towers are to be sprinklered and Siamese (fire department) connections are to be provided. The locations of the Siamese connections are illustrated on **Drawing SSP-1**.

The existing and proposed fire hydrants satisfies the required hydrant coverage and flow capacity conditions based on:

- National Fire Protection Agency (NFPA) Table 18.5.4.3 in Appendix I of the City of Ottawa Technical Bulletin ISTB-2018-02 noting that a hydrant situated less than 76 m away from a building can supply a maximum capacity of 5,678 L/min.
- Section 3.2.5.16 of the Ontario Building Code, requiring the distance between the fire department connection and hydrant cannot be obstructed or more than 45 m.

2.5 Proposed Water Servicing

The proposed development is to be serviced by twin 200 mm service connections to each tower. Each twin 200 mm service connection is connected to the existing private 200 mm watermain system within the site.

To facilitate the building construction, the existing 200 mm private watermain through the site is to be realigned within the site boundary. This requires the that the private watermain pass through the building structure at two locations. The details of the private watermains passing through the building structure are to be included with the mechanical engineering design for the buildings.

The nature of the 200mm private watermain re-alignment remains subject to construction phasing decisions. The details of construction phasing and ensuring the level of service is maintained within the site boundary is to be confirmed through the subsequent stages of the development application process.

The mechanical engineering consultant is responsible to confirm the water pressure within each building is adequate to meet building code requirements.

3.0 Wastewater Servicing

3.1 Background

The existing commercial building on the site is serviced by a sanitary service lateral connected to the existing 450 mm diameter sanitary sewer in Baseline Road. The service lateral and manholes will be decommissioned, capped, and abandoned at the property line per City Standard S11.4, as shown in Existing Conditions and Removals Plan (see **Drawing EX-1**).

3.2 Design Criteria

The wastewater servicing is assessed using the City of Ottawa Sewer Design Guidelines (2012) as amended, and the MECP Design Guidelines for Sewage Works. The following design criteria are applied to the assessment of wastewater servicing for the site.

Population criteria are the same as that applied for the water demand analysis (see **Section 2.2.1**).

Residential Wastewater Flow	
Average Flow Generation	Residential = 280 L/cap/day
	Commercial = 28,000 L/ha/day of building space
Peaking Factor	Harmon Equation (max. residential = 4.0)
	Commercial = 1.5
Harmon Correction Factor	0.80
Infiltration Allowance	0.33 L/s/ha

3.3 Wastewater Generation and Servicing Design

The peak wastewater flow is assessed based on the proposed development conditions described in **Table 1.1** and the design criteria described in **Section 3.2**.

The assessed peak wastewater flow for the site is summarized **Table 3.1**. Supporting calculations are provided in **Appendix D.1**.

Table 3.1 - Estimated Total Wastewater Peak Flow

Phase / Tower	Residential			Commercial			Infiltration Flow (L/s)	Total Peak Flow (L/s)
	Population	Peak Factor	Peak Flow (L/s)	Area (ha)	Peak Factor	Peak Flow (L/s)		
3-4	426	3.41	4.7	0.10	1.5	0.05	0.3	5.0
5 & 6	982	3.24	10.3	0.12	1.5	0.06	0.2	10.6
Total Estimated Wastewater Peak Flow (L/s):								**15.4**

The anticipated peak wastewater flows for the proposed development were provided to the City of Ottawa staff to evaluate the adequacy of the receiving municipal sanitary sewer system in the vicinity of the site and downstream network. The city confirmed that there are no concerns with the sanitary peak flow from the proposed development (see **Appendix D.2** for correspondence).

The original sanitary flow confirmation request is based on higher population and flow rate data than what is presented in **Table 3.1**. No update to the flow confirmation request is made on the basis that the original request represents a more conservative condition relative to the current design intent.

3.4 Proposed Sanitary Servicing

The proposed development is to be serviced with two 200 mm connections (one for Phase 3-4 and one for Phase 5 and Phase 6) to the existing 250 mm diameter sanitary sewer in Sandcastle Drive. The proposed sanitary servicing is shown on **Drawing SSP-1**. Connections and service requirements are to be consistent with City of Ottawa guidelines and specifications.

The mechanical engineering consultant is responsible to confirm the appropriate backwater valve requirements are satisfied.

4.0 Stormwater Management and Servicing

4.1 Background

The existing storm drainage system along the boundaries of the site consists of curb and catch basins as part of a typical urban roadway section. Catch basins are connected to an associated storm sewer system. The existing storm sewers along the boundaries of the site consist of a 450 mm diameter concrete sewer within Baseline Road., and 300 mm and 450mm diameter concrete sewers within Sandcastle Drive.

An existing private storm sewer system is also servicing the developed portions of the property. A description of the existing conditions as they relate to the proposed development is provided in Section 4.3.

The stormwater management and servicing review for the proposed development considers conditions associated with the approved SPC application D07-12-14-0198 and the current SPC application (D02-02-23-0046 and D07-12-23-0073). As noted in Section 1.1, amendments to the approved SPC application are being coordinated and submitted separately from the current SPC application.

4.2 Design Criteria

The stormwater management (SWM) and storm sewer servicing is assessed using the City of Ottawa Sewer Design Guidelines (2012) as amended. The following design criteria are applied to the assessment of SWM and storm sewer servicing for the site.

- Quantity control required for the site up to and including the 100-yr storm event.
    - A maximum pre-development rational method runoff coefficient ‘C’ of 0.50 is applied.
    - Time of flow for modified rational method calculations should be not less than 10 minutes.
- The water quality control target is to the ‘Enhanced’ level with 80% total suspended solids (TSS) removal.
- Provide both pre and post development stormwater management plans, showing individual drainage areas and their respective coefficients.

4.3 Existing Conditions

The existing stormwater management and storm servicing condition within the boundary that also considers Phase 1 and 2 is considered represented by the approved SPC application D07-12-14-0198. A copy of the Stormwater Management Plan from this application is provided in **Appendix E.1** for reference. Related stormwater management calculation data from the *2940/2946/2948 Baseline Road*

Development Servicing and Stormwater Management Report, Novatech, Revised December 18, 2015 is also included in **Appendix E.1** for reference.

4.4 Stormwater Management Design

Based on the proposed development, drainage area boundaries are defined as illustrated on **Drawing SD-1**. Runoff coefficient values for modified rational method calculations are assigned to each drainage area based on the anticipated finished surface condition (e.g., asphalt, concrete, gravel, grass, etc.).

In addition to the drainage areas directly associated with the proposed development, a review of the local topographic data identified contributing area from the adjacent residential development area to the south. This additional external area is accommodated within the proposed development.

A summary of drainage areas and runoff coefficients are provided in **Table 4-1**. Supporting calculations are provided in **Appendix E.2**.

Table 4-1: Summary of Post-Development Drainage Areas

Drainage Areas	Area (ha)	Runoff Coefficient, C	Outlet
Phase 1 and 2			
FREE1	0.07	0.57	Overland
PL1	0.77	0.89	EX STM MH 100
Phase 3-4			
CIST1-1 to CIST1-12	0.797	0.48	STM 100
EXT-1 and EXT-2	0.04	0.20	STM 100
Phase 5 and 6			
OFF-SITE 1	0.038	0.73	Overland
OFF-SITE 2	0.087	0.72	Overland
CIST2-1 to CIST2-11	0.531	0.84	STM 200
Public Park			
PARK	0.102	0.50	STM PARK 1
Total	**2.44**	**0.70**	

The runoff coefficient for the 'CIST' areas considers a pervious portion of the roof attributed to a proposed 'green roof'.

4.4.1 ALLOWABLE RELEASE RATE

The rational method equation (Q = 2.78 CiA) is used to assess the allowable pre-development release rate from the site. The following parameters are used to assess the allowable release rate.

- A runoff coefficient of 0.50 is used to establish the allowable release rate.

- Rainfall intensity is for the City of Ottawa 5-year and 100-year design storm. A Time of Concentration of twenty minutes is applied based on the anticipated historical design value for the City of Ottawa. The resultant intensity is 70.25 mm/hr for the 5-year design storm and 119.95 mm/hr for the 100-year design storm. This is consistent with the 2015 Novatech report supporting the approved SPC application D07-12-14-0198.
- Contributing area considered is the overall boundary including 2940, 2942, 2944, and 2946 Baseline Road. The contributing area also includes the external areas contributing from the adjacent residential development area to the south.

Table 4-2: Allowable Release Rate

Design Storm	Pre-Development Flow Rate (L/s) for C=0.5, A=2.471 ha, Tc = 20 min
5-year	237.8
100-year	406.0

Supporting calculations are provided in **Appendix E.2**.

The target allowable release rates are apportioned to each storm sewer outlet to assess water quantity control measures to be applied.

4.4.1.1 Uncontrolled Areas

Uncontrolled areas represent drainage areas that cannot be graded to enter the site/building drainage collection system. As such, they are to sheet drain off the site to the adjacent roadways (see **Drawing SD-1**).

The grading design for the proposed public park space is also limited and not storage capacity is available to facilitate a water quantity control. Although serviced with a storm sewer connection, the public park space is considered an uncontrolled area with the anticipated peak flow rates subtracted from overall the allowable rate in the same manner as the areas that are not intercepted by the site/building drainage collection system.

The following table lists the 5-year and 100-year peak flow rates from the uncontrolled runoff areas.

Table 4-3: Peak Uncontrolled 5-Year and 100-Year Run-Off

Area ID	Area (ha)	5-Year Uncontrolled Peak Flow (L/s)	100-Year Uncontrolled Peak Flow (L/s)
Phase 1 and 2			
FREE1	0.07	11.6	22.5
Phase 5 and 6			
OFF-SITE 1	0.038	8.1	15.5
OFF-SITE 2	0.087	18.2	35.0
Public Park			
PARK	0.102	14.8	29.0
Total	**0.297**	**52.7**	**102.0**

The 100-year uncontrolled peak flow is subtracted from the allowable release rate to establish the allowable discharge rate from each storm sewer outlet. The related calculations are included with the MRM spreadsheet in **Appendix E.2**.

4.4.2 QUANTITY CONTROL

Based on the proposed change to the site condition, quantity control measures are needed to manage stormwater runoff to the allowable release rate target associated with the proposed development.

A spreadsheet approach using the modified rational method (MRM) is applied to assess the quantity control volume required to control the 100-year post-development runoff rate to the allowable release rates assigned to each storm outlet. The MRM calculations are provided in **Appendix E.2**.

The allowable design flow rate and volume of stormwater storage required for each cistern system is summarized in **Table4.4**.

Table 4-4: 5-Year and 100-Year Storage Requirement

Storm Outlet	Area IDs	Controlled Drainage Area (ha)	Storm Return Period	Allowable Discharge (L/s)	$V_{required}$ (m^3)
EX 100	PL1	0.77	5-Year	75.6	75
			100-Year	97.3	188
STM 100	CIST1-1 to CIST1-12	0.797	5-Year	21.3	164
			100-Year	21.3	175
STM 200	CIST2-1 to CIST2-11	0.531	5-Year	17.2	90
			100-Year	17.2	215

The 5-Year and 100-Year allowable discharge rates for area 'PL1' are unchanged from the findings presented in the 2015 Novatech report supporting the approved SPC application D07-12-14-0198. The 75.6 L/s and 97.3 L/s values are based on a 171 mm orifice with 1.55 m and 2.55 m of head respectively (see Novatech calculations in **Appendix E.1**).

With the change to the overall site development plan the length of storage pipe originally proposed in Phase 1 and 2 is now reduced. The total length of 1500 mm pipe is reduced from 118 m to 51.3 m and one 1500 mm diameter maintenance hole (CBMH110) is removed. Using the same methodology and considering the same total depth of 2.55 m from the Novatech 2015 analysis, the resultant storage volume in the 1500 pipe is 206 m^3. This exceeds the updated 100-Year storage volume requirement for area 'PL1' of 188 m^3 presented in **Table 4-4**. An updated storage calculation is provided in **Appendix E.2**.

For Phase 3-4 and Phase 5 and 6, the associated water quantity control storage volume presented in **Table 4-4** is to be accommodated entirely within the internal plumbing system of the proposed buildings. The storage capacity of the exterior low points in the open space adjacent to Phase 3-4 (area 'CIST1-6' and 'CIST1-7') is not considered significant enough to be counted as storage volume.

There is no surface ponding expected in the 2-Year event in the surface parking or drive aisles.

The low point in the public park is also not considered to have enough volume to provide a meaningful storage volume and the associated 100-year flow is considered as an uncontrolled flow from the overall site boundary.

The proposed stormwater management plan provides adequate attenuation to meet the target release rate for the 5-Year and 100-Year storm events as shown in **Table 4-5** below.

Table 4-5: Estimated Post-Development Discharge

Area Type	5-Year (L/s)	100-Year (L/s)	Target (L/s)
Uncontrolled	52.7	102.0	**237.8**
Controlled Areas/	114.1	135.8	
Total Flow to Sewer	**166.8**	**237.8**	

Flows from the uncontrolled areas are considered in the overall release rate for the site and the cistern storage will allow for the attenuation of peak flows to meet the allowable target release rate. The modified rational method calculations and the storm design sheet are provided in **Appendix E.2**.

4.4.3 QUALITY CONTROL

For the existing Phase 1 and Phase 2, an oil-grit separator (OGS) unit is provided. The total contributing area to this existing OGS unit is now reduced based on the development plan now proposed for the overall site. No change to the existing OGS unit is proposed and the original design intent is still considered to be satisfied.

For the drainage areas associated with Phase 3 through Phase 6 that direct runoff to the internal building mechanical system, water quality control is to be incorporated into the stormwater management systems within each building that capture and control the flow into the respective storm outlets STM 100 and STM 200. The mechanical engineering consultant is responsible for confirming that the TSS removal target is achieved.

Water quality control of the areas contributing uncontrolled runoff and for the new public park space is not considered feasible.

4.5 Proposed Stormwater Servicing

The existing 375 mm storm sewer connected to the 600 mm storm sewer in Baseline Road remains the site service connection associated with Phase 1 and 2. The existing 171 mm orifice remains in place to provide the necessary flow control.

Phase 3-4 is to be serviced by a 300 mm diameter storm sewer connection to the existing 450 mm and diameter storm sewer in Sandcastle Drive. Flow controls are to be provided by the internal building mechanical system.

Phase 5 and 6 is to be serviced by a 300 mm diameter storm sewer connection to the existing 375 mm diameter storm sewer in Sandcastle Drive. Flow controls are to be provided by the internal building mechanical system.

The public park space is supported with a dedicated 200 mm storm sewer connection with no flow control measure applied. The storm sewer service for the public park is also connected to the 450 mm pipe in Sandcastle Drive.

The proposed storm sewer connections are illustrated on **Drawing SSP-1** and **Drawing SD-1**. A storm sewer design sheet is included in **Appendix E.2**.

The mechanical engineering consultant is responsible to confirm that the appropriate backwater valve requirements are satisfied, the nature of the foundation drainage system, and that any roof drainage systems (including internal storage systems, roof drains, scuppers, and applicable green roof conditions) are adequate for accommodating the 100-Year design storm conditions. It is noted that the 100-Year SWM design condition is more stringent than the design condition associated with the typical building code requirements.

5.0 Other Considerations

5.1 Site Grading

A grading plan (see **Drawing GP-1**) is provided to support the stormwater management requirements and emergency overland flow routes, and provide for minimum cover requirements for water, sanitary, and storm servicing systems where possible. The proposed grading plan provides adequate emergency overland flow routes and generally maintains the existing drainage patterns within the adjacent public rights of way.

The nature of requirements associated with grade raise restrictions is being coordinated with the geotechnical engineering consultant. Grading modifications along the south boundary may still be applied to manage potential grade raise considerations.

5.2 Geotechnical

Geotechnical conditions for the site are investigated by Paterson Group with findings presented in the supporting investigation report *Geotechnical Investigation – Proposed Multi-Storey Building – Tower 4 to 6, 2946 Baseline Road* dated March 24, 2022 (provided under separate cover in support of the development application process). Recommendations from the geotechnical report are intended to be followed as they relate to the proposed servicing strategy for the site.

5.3 Utilities

Overhead (OH) hydro-wires run parallel to the north property line along the south side of Baseline Road, with branches servicing the adjacent sites in intervals. All utilities within the work area will require relocation during construction. The existing utility poles within the public right of way are to be protected during construction.

As the site is surrounded by existing residential and commercial development, Hydro Ottawa, Bell, Rogers, and Enbridge servicing is readily available through existing infrastructure to service this site. The exact size, location, and routing of utilities will be finalized after design circulation. Existing overhead wires and utility plants may need to be temporarily moved/reconfigured to allow sufficient clearance for the movement of heavy machinery required for construction. The relocation of existing utilities will be coordinated with the individual utility providers upon design circulation.

5.4 Erosion and Sediment Control During Construction

To protect downstream water quality and prevent sediment build-up in catch basins and storm sewers, erosion and sediment control measures must be implemented during construction. Erosion and sediment control (ESC) measures are the responsibility of the contractor. Recommendations for ESC implementation are summarized as follows.

- Implement best management practices to provide appropriate protection of the existing and proposed drainage system and the receiving water course(s).
- Limit the extent of the exposed soils at any given time.
- Re-vegetate exposed areas as soon as possible.
- Minimize the area to be cleared and grubbed.
- Protect exposed slopes with geotextiles, geogrid, or synthetic mulches.
- Install silt barriers/fencing around the perimeter of the site to prevent the migration of sediment offsite.
- Install track out control mats (mud mats) at the entrance/egress as shown in Drawing ECDS-1 to prevent migration of sediment into the public ROW.
- Provide sediment traps and basins during dewatering works.
- Install sediment traps (such as SiltSack® by Terrafix) between catch basins and frames.
- Schedule the construction works at times which avoid flooding due to seasonal rains.

The Contractor is also required to complete inspections and guarantee the proper performance of erosion and sediment control measures at least after every rainfall. The inspections are to include:

- Verification that water is not flowing under silt barriers.
- Cleaning and changing the sediment traps placed on catch basins.

The proposed location of silt fences, sediment traps, and other erosion control measures is shown on **Drawing ECDS-1**.

5.5 Regulatory Approvals

Given the nature of the anticipated site ownership and that the storm drainage is to be connected to an existing storm sewer, the site will not require an Environmental Compliance Approval (ECA) from the Ministry of the Environment, Conservation and Parks (MECP) under O.Reg. 525/98.

Requirements for the completion of registration for potential groundwater pumping with the Environmental Activity and Sector Registry (EASR) and the preparation of a Water Taking and Discharge Plan as stipulated under O.Reg. 63/16 are to be coordinated by the geotechnical and/or hydrogeological engineer and the excavation contractor as needed. Additionally, although not anticipated, an MECP Permit to Take Water (PTTW), required for dewatering volumes exceeding 400,000L/day is to be coordinated by the geotechnical and/or hydrogeological engineer and the excavation contractor as needed.

6.0 Closing

The water, wastewater, and storm water servicing conditions assessed in this report indicate that the existing public services immediately adjacent to the project site and the proposed servicing strategy are adequate to support the proposed development.

The mechanical engineering consultant is responsible to confirm:

- Water - The water pressure within each building is adequate to meet building code requirements.
- Sanitary - The appropriate backwater valve requirements are satisfied.
- Storm - The appropriate backwater valve requirements are satisfied, the nature of the foundation drainage system, and that any area drain, trench drain, and roof drainage systems (including internal storage systems, roof drains, scuppers, and applicable green roof conditions) are adequate for accommodating the 100-Year design storm conditions. It is noted that the 100-Year SWM design condition is more stringent than the design condition associated with the typical building code requirements. That water quality control measures are implemented to achieve the 80% TSS removal target.

APPENDICES

Appendix A Background Information

A.1 Site Plan and Statistics

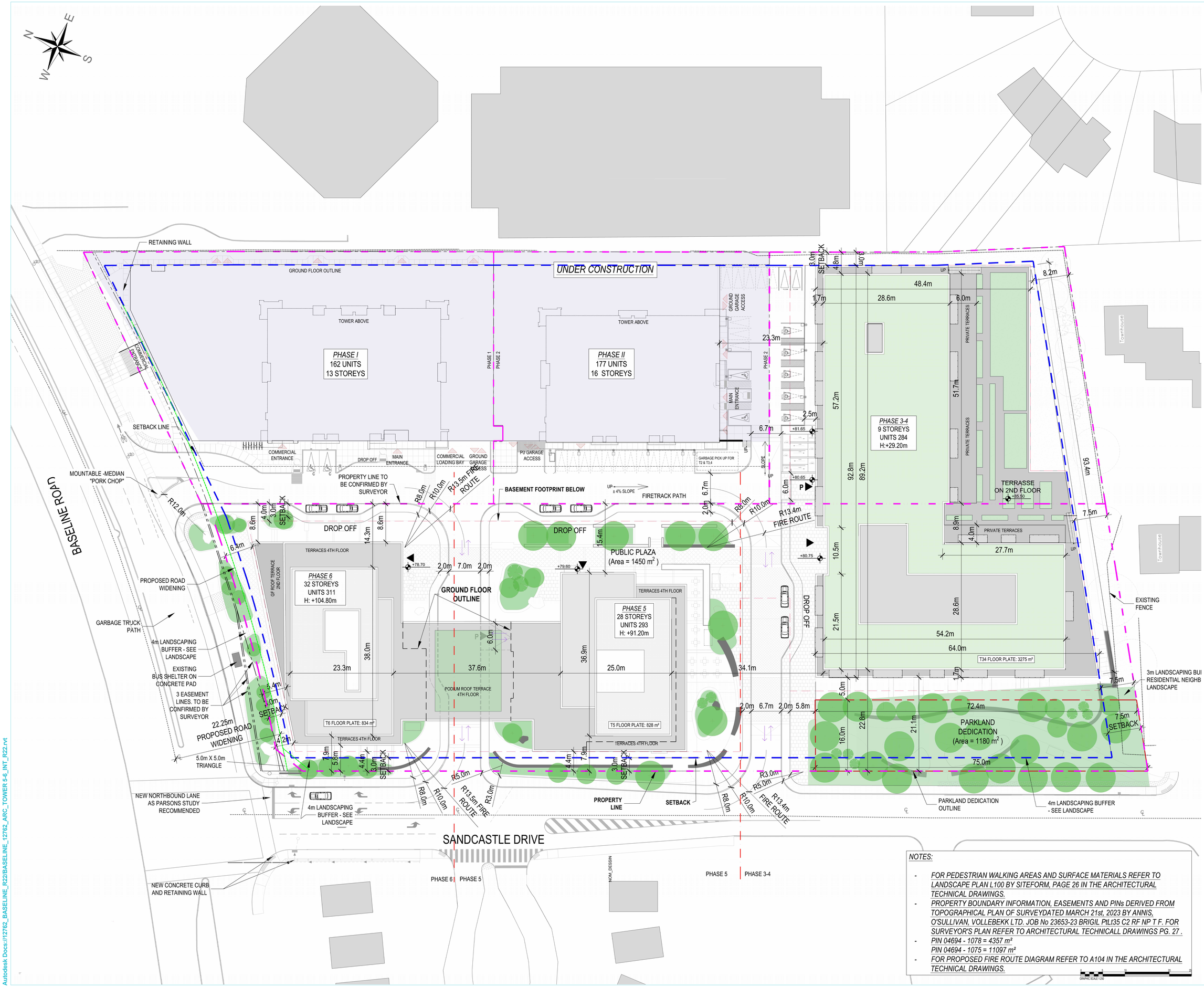

NOTES:

- *FOR PEDESTRIAN WALKING AREAS AND SURFACE MATERIALS REFER TO LANDSCAPE PLAN L100 BY SITEFORM, PAGE 26 IN THE ARCHITECTURAL TECHNICAL DRAWINGS.*
- *PROPERTY BOUNDARY INFORMATION, EASEMENTS AND PINs DERIVED FROM TOPOGRAPHICAL PLAN OF SURVEYDATED MARCH 21st, 2023 BY ANNIS, O'SULLIVAN, VOLLEBEKK LTD. JOB No 23653-23 BRIGIL PtLt35 C2 RF NP T F. FOR SURVEYOR'S PLAN REFER TO ARCHITECTURAL TECHNICALL DRAWINGS PG. 27 .*
- *PIN 04694 - 1078 = 4357 m²*
  PIN 04694 - 1075 = 11097 m²
- *FOR PROPOSED FIRE ROUTE DIAGRAM REFER TO A104 IN THE ARCHITECTURAL TECHNICAL DRAWINGS.*

GRAPHIC SCALE 1:250

NOTES GÉNÉRALES General Notes

1. Ces documents d'architecture sont la propriété exclusive de NEUF architect(e)s et ne pourront être utilisés, reproduits ou copiés sans autorisation écrite préalable. / These architectural documents are the exclusive property of NEUF architect(e)s and cannot be used, copied or reproduced without written pre-authorisation
2. Les dimensions apparaissant aux documents devront être vérifiées par l'entrepreneur avant le début des travaux. / All dimensions which appear on the documents must be verify by the contractor before to start the work.
3. Veuillez aviser l'architecte de toute dimension erreur et/ou divergences entre ces documents et ceux des autres professionnels. / The architect must be notified of all errors, omissions and discrepancies between these documents and those of the others professionnals.
4. Les dimensions sur ces documents doivent être lues et non mesurées. / The dimensions on these documents must be read and not measured.

STRUCTURE Structural
Leroux & Cyr
500 boul. Gouin Est, bureau 105, Montréal QC H3L 3R9
T: 438-381-7773 Courriel: gleroux@leroucyr.com

PLANIFICATEUR Planner
FOTENN Planning & Urban Design
223, McLeod Street, Ottawa, ON K2P 0Z8
T 613 730 5709 Email: beed@fotenn.com

ARCHITECTURE DE PAYSAGE Landscape Architect
SITEFORM
Jonathan Loschmann
T 613 796 4537 Email: jonathan.loschmann@siteform.ca

GEOTECHNIQUE Géotechnical
Paterson Group
9 Auriga drive, Ottawa, ON, K2E 7T9
T: 613 226 7381 Email: jvilleneuve@patersongroup.ca

CIVIL Civil
STANTEC
300 - 1331 Clyde Avenue, Ottawa ON K2C 3G4
T 613 722 4420 Email:

ARCHITECTES Architect
NEUF ARCHITECTES INC.
630, boul. René-Lévesque O. 32e étages, Montréal QC H3B 1S6
T 514 847 1117 NEUFarchitectes.com

SCEAU / Seal

ONTARIO ASSOCIATION OF ARCHITECTS
MARK PUENTES
LICENCE
7924

NEUF
ARCHITECT(E)S

brigil
56 Lois Street, Gatineau QC J8Y 3R7
T: 819-243-7382 Email: JLRivard@brigil.com; mcherwer@brigil.com

OUVRAGE Project
BASELINE TOWER 3456

EMPLACEMENT Location
2946 BASELINE ROAD, OTTAWA, ON

NO PROJET No.
12762.00

NO	RÉVISION	DATE (aa-mm-jj)
1	FOR SITE PLAN APPLICATION	25-05-2023
2	FOR SITE PLAN APPLICATION	21-06-2024

DESSINÉ PAR Drawn by
CB/AT

VÉRIFIÉ PAR Checked by
CB

DATE (aa-mm-jj)
23/04/21

ÉCHELLE Scale

TITRE DU DESSIN Drawing Title
PROPOSED SITE PLAN

RÉVISION Revision
2

NO. DESSIN Dwg Number
A101

D07-12-21-0085

14602

Autodesk Docs://12762_BASELINE_R22/BASELINE_12762_ARC_TOWER 5-6_INT_R22.rvt

PROJECT STATISTICS

INFORMATION SUR LE PROJET - *PROJECT INFORMATION* **2024-05-17**

12762 **Baseline 3456** *Projet Global / Overall Project*

Province /*Province*	Ontario		
Zonage / *Zoning*	City of Ottawa zoning By-law No. 2008-250		
Superficie du Lot / *Property Area*	15,962.4 m² / *sq. m.*	171,819	pi² / *sq. ft*

STATISTIQUES SUR LE PROJET / *PROJECT STATISTICS*	Tour 6 / *Tower 6*	Tour 5 / *Tower 5*	Tour 34 / *Tower 34*
Hauteur du Bâtiment (m)/ *Building Height* (m)	104.8m (32 étages / storeys)	91.2 m (28 étages / storeys)	29.20m (9 étages / storeys)

STATISTIQUES DES UNITÉS / *UNIT STATISTICS*	Tour 6 / *Tower 6*	Tour 5 / *Tower 5*	Tour 34 / *Tower 34*	TOTAL
Studio / *Bachelor*	28	115	16	159
1 Chambre / *1 Bedroom*	158	122	228	508
2 Chambres / *2 Bedrooms*	121	50	40	211
3 Chambres / *3 Bedrooms*	4	6	0	10
Total Number of Units	311	293	284	888

STATIONNEMENT RÉSIDENTIEL / *RESIDENTIAL PARKING*

PHASE / *PHASE*	EXIGÉ / *REQUIRED*		FOURNIS / *PROVIDED*		
	#/Unité / *#/Unit*	Parking	Ratio Moy. (m²) / *Avg. Ratio (m²)*	Location	Parking
Tour 6- Résidentiel / *Tower 6 - Résidential*	1,0/unit	311	0,5/unit	Provided In T6	54
				Provided In T5	84
				Provided In T34	22
Tour 6 - Visitors / *Tower 6 - Visiteur*	0,2/unit	62	0,2/unit	Provided In T5	46
				Provided In T34	16
Tour 6 - Accessible (inclus dans compte des visiteurs) / *Tower 6 - Accessible (included in visitors count)*	1-12=1 Type A 13-100=4% of total (50% Type A / 50% Type B) 101-200=1+3% of total (50% Type A / 50% Type B) 201-1000=2+2% of total (50% Type A / 50% Type B) 1001+=11+1% of total (50% Type A / 50% Type B)	8	1-12=1 Type A 13-100=4% of total (50% Type A / 50% Type B) 101-200=1+3% of total (50% Type A / 50% Type B) 201-1000=2+2% of total (50% Type A / 50% Type B) 1001+=11+1% of total (50% Type A / 50% Type B)		6
Tower 6 - Total Residential & Visitor Parking	1,2/unit	373	0,7/unit		222
Tour 5 - Résidentiel / *Tower 5 - Résidential*	1,0/unit	293	0,5/unit	Provided In T5	11
				Provided In T34	132
Tour 5 - Visitors / *Tower 5 - Visiteur*	0,2/unit	59	0,2/unit	Provided In T5	44
				Provided In T34	15
Tour 5 - Accessible (inclus dans compte des visiteurs) / *Tower 5 - Accessible (included in visitors count)*	1-12=1 Type A 13-100=4% of total (50% Type A / 50% Type B) 101-200=1+3% of total (50% Type A / 50% Type B) 201-1000=2+2% of total (50% Type A / 50% Type B) 1001+=11+1% of total (50% Type A / 50% Type B)	8	1-12=1 Type A 13-100=4% of total (50% Type A / 50% Type B) 101-200=1+3% of total (50% Type A / 50% Type B) 201-1000=2+2% of total (50% Type A / 50% Type B) 1001+=11+1% of total (50% Type A / 50% Type B)		6
Tower 5 - Total Residential & Visitor Parking	1,2/unit	352	0,7/unit		202
Tour 34 - Résidentiel / *Tower 34 - Résidential*	1,0/unit	284	0,5/unit	Provided In T34	142
Tour 34 - Visitors / *Tower 34 - Visiteur*	0,2/unit	57	0,2/unit	Provided In T34	57
Tour 34 - Accessible (inclus dans compte des visiteurs) / *Tower 34 - Accessible (included in visitors count)*	1-12=1 Type A 13-100=4% of total (50% Type A / 50% Type B) 101-200=1+3% of total (50% Type A / 50% Type B) 201-1000=2+2% of total (50% Type A / 50% Type B) 1001+=11+1% of total (50% Type A / 50% Type B)	8	1-12=1 Type A 13-100=4% of total (50% Type A / 50% Type B) 101-200=1+3% of total (50% Type A / 50% Type B) 201-1000=2+2% of total (50% Type A / 50% Type B) 1001+=11+1% of total (50% Type A / 50% Type B)		7
Tower 34 - Total Residential & Visitor Parking	1,2/unit	341	0,7/unit		199
Total Residential & Visitor Parking	1,2/unit	1066	0,7/unit		623

STATIONNEMENT COMMERCIALE / *COMMERCIAL PARKING*

PHASE / *PHASE*	Aire (m²) / *Area (m²)*	EXIGÉ / *REQUIRED*		FOURNIS / *PROVIDED*		
		Ratio Moy. (m²) / *Avg. Ratio (m²)*	Commercial Parking	Ratio Moy. (m²) / *Avg. Ratio (m²)*	Location	Commercial Parking
Tour 1 - Commerciale / *Tower 1 - Commercial*		73			Provided in T34	73
Tour 6 - Commerciale / *Tower 6 - Commercial*	844	3.4/100	30	3.4/100		30
Tour 5 - Commerciale / *Tower 5 - Commercial*	312	3.4/100	18	3.4/100		18
Tour 34 - Commerciale / *Tower 34 Commercial*	1025	3.4/100	28	3.4/100		28
Total Commercial Parking	2181	3.4/100	149	3.4/100		149

STATIONNEMENT POUR VÉLOS / *BICYCLE PARKING*

PHASE / *PHASE*	Unités / *Units*	Aire (m²) / *Area (m²)*	EXIGÉ / *REQUIRED*		FOURNIS / *PROVIDED*		
			Ratio / *Ratio*	Bicycle Parking	Ratio Moy. (m²) / *Avg. Ratio (m²)*	Location	Bicycle Parking
Tour 6 - Résidentiel / Tower 6 - Residential	311		0,5/unit	156	0.85	Provided in T6	108
						Provided in T34	157
					Total T6 Residential Bicycle parking		265
Tour 5 - Résidentiel / Tower 5 - Residential	293		0,5/unit	147	0.85	Provided in T5	180
						Provided in T34	70
					Total T5 Residential Bicycle parking		250
Tour 34 - Résidentiel / Tower 34 - Residential	284		0,5/unit	142	1.00	Provided in T34	284
					Total T34 Residential Bicycle parking		284
Total Residential Bicycle Parking	888		0,5/unit	444	0.90		799
Tour 6 - Commerciale / Tower 6 - Commercial		844	1/250 m2	3	1/250 m2	Provided in T6	3
Tour 5 - Commerciale / Tower 5 - Commercial		312	1/250 m2	1	1/250 m2	Provided in T5	1
Tour 34 - Commerciale / Tower 34 - Commercial		1025	1/250 m2	4	1/250 m2	Provided in T34	4
Total Commercial Bicycle Parking		2181	1/250 m2	8	1/250 m2		8

GROSS FLOOR AREA

BASELINE 3456 - GROSS FLOOR AREA (ZONING)								
	TOWER 6		TOWER 5		TOWER 34		TOTAL	
	m² / *m²*	pi² / *ft²*	m² / *m²*	pi² / *ft²*	m² / *m²*	pi² / *ft²*	m² / *m²*	pi² / *ft²*
TOTAL GFA	**21327**	**229562**	**18381**	**197851**	**23443**	**252338**	**63151**	**679752**
ABOVE GRADE	21327	229562	18381	197851	23443	252338	63151	679752
UNDER GRADE	0	0	0	0	0	0	0	0
32nd Floor	629	6770						
31st Floor	629	6770						
30th Floor	629	6770						
29th Floor	629	6770						
28th Floor	629	6770	639	6878				
27th Floor	629	6770	639	6878				
26th Floor	629	6770	639	6878				
25th Floor	629	6770	639	6878				
24th Floor	629	6770	639	6878				
23rd Floor	629	6770	639	6878				
22nd Floor	629	6770	639	6878				
21st Floor	629	6770	639	6878				
20th Floor	629	6770	639	6878				
19th Floor	629	6770	639	6878				
18th Floor	629	6770	639	6878				
17th Floor	629	6770	639	6878				
16th Floor	629	6770	639	6878				
15th Floor	629	6770	639	6878				
14th Floor	629	6770	639	6878				
13th Floor	629	6770	639	6878				
12th Floor	629	6770	639	6878				
11th Floor	629	6770	639	6878				
10th Floor	629	6770	639	6878				
9th Floor	629	6770	639	6878	2787	29999		
8th Floor	629	6770	639	6878	2787	29999		
7th Floor	629	6770	639	6878	2787	29999		
6th Floor	629	6770	639	6878	2787	29999		
5th Floor	629	6770	639	6878	2787	29999		
4th Floor	467	5027	0	0	2787	29999		
3rd Floor	1120	12056	1046	11259	2787	29999		
2nd Floor	1120	12056	1288	13864	2525	27179		
Ground Floor 2	0	0	158	1701	1409	15166		
Ground Floor 1/ Basement 0	1008	10850	553	5952	0	0		
Basement 1	0	0	0	0	0	0		
Basement 2	0	0	0	0	0	0		

AMENITY AREAS

12762	BASELINE 3456 - AMENITY AREAS	2024-06-10

STATISTIQUES / *STATISTICS*	TOWER 34				TOWER 5				TOWER 6				TOTAL AMENITY AREA					
	INTERIOR AMENITY AREA		EXTERIOR AMENITY AREA		INTERIOR AMENITY AREA		EXTERIOR AMENITY AREA		INTERIOR AMENITY AREA		EXTERIOR AMENITY AREA		TOTAL INTERIOR AMENITY AREA		TOTAL EXTERIOR AMENITY AREA		TOTAL AMENITY AREA	
	m² / *m²*	pi² / *ft²*	m² / *m²*	pi² / *ft²*	m² / *m²*	pi² / *ft²*	m² / *m²*	pi² / *ft²*	m² / *m²*	pi² / *ft²*	m² / *m²*	pi² / *ft²*	m² / *m²*	pi² / *ft²*	m² / *m²*	pi² / *ft²*	m² / *m²*	pi² / *ft²*
31e Étage / 31st Floor									0.00	0.00	0.00	0.00	0.00	0.00	0.00	0.00	0.00	0.00
32e Étage / 32nd Floor									0.00	0.00	0.00	0.00	0.00	0.00	0.00	0.00	0.00	0.00
30e Étage / 30th Floor									0.00	0.00	0.00	0.00	0.00	0.00	0.00	0.00	0.00	0.00
29e Étage / 29th Floor									0.00	0.00	0.00	0.00	0.00	0.00	0.00	0.00	0.00	0.00
28e Étage / 28th Floor					0.00	0.00	0.00	0.00	0.00	0.00	0.00	0.00	0.00	0.00	0.00	0.00	0.00	0.00
27e Étage / 27th Floor					0.00	0.00	0.00	0.00	0.00	0.00	0.00	0.00	0.00	0.00	0.00	0.00	0.00	0.00
26e Étage / 26th Floor					0.00	0.00	0.00	0.00	0.00	0.00	0.00	0.00	0.00	0.00	0.00	0.00	0.00	0.00
25e Étage / 25th Floor					0.00	0.00	0.00	0.00	0.00	0.00	0.00	0.00	0.00	0.00	0.00	0.00	0.00	0.00
24e Étage / 24th Floor					0.00	0.00	0.00	0.00	0.00	0.00	0.00	0.00	0.00	0.00	0.00	0.00	0.00	0.00
23e Étage / 23rd Floor					0.00	0.00	0.00	0.00	0.00	0.00	0.00	0.00	0.00	0.00	0.00	0.00	0.00	0.00
22e Étage / 22nd Floor					0.00	0.00	0.00	0.00	0.00	0.00	0.00	0.00	0.00	0.00	0.00	0.00	0.00	0.00
21e Étage / 21st Floor					0.00	0.00	0.00	0.00	0.00	0.00	0.00	0.00	0.00	0.00	0.00	0.00	0.00	0.00
20e Étage / 20th Floor					0.00	0.00	0.00	0.00	0.00	0.00	0.00	0.00	0.00	0.00	0.00	0.00	0.00	0.00
19e Étage / 19th Floor					0.00	0.00	0.00	0.00	0.00	0.00	0.00	0.00	0.00	0.00	0.00	0.00	0.00	0.00
18e Étage / 18th Floor					0.00	0.00	0.00	0.00	0.00	0.00	0.00	0.00	0.00	0.00	0.00	0.00	0.00	0.00
17e Étage / 17th Floor					0.00	0.00	0.00	0.00	0.00	0.00	0.00	0.00	0.00	0.00	0.00	0.00	0.00	0.00
16e Étage / 16th Floor					0.00	0.00	0.00	0.00	0.00	0.00	0.00	0.00	0.00	0.00	0.00	0.00	0.00	0.00
15e Étage / 15th Floor					0.00	0.00	0.00	0.00	0.00	0.00	0.00	0.00	0.00	0.00	0.00	0.00	0.00	0.00
14e Étage / 14th Floor					0.00	0.00	0.00	0.00	0.00	0.00	0.00	0.00	0.00	0.00	0.00	0.00	0.00	0.00
13e Étage / 13th Floor					0.00	0.00	0.00	0.00	0.00	0.00	0.00	0.00	0.00	0.00	0.00	0.00	0.00	0.00
12e Étage / 12th Floor					0.00	0.00	0.00	0.00	0.00	0.00	0.00	0.00	0.00	0.00	0.00	0.00	0.00	0.00
11e Étage / 11th Floor					0.00	0.00	0.00	0.00	0.00	0.00	0.00	0.00	0.00	0.00	0.00	0.00	0.00	0.00
10e Étage / 10th Floor					0.00	0.00	0.00	0.00	0.00	0.00	0.00	0.00	0.00	0.00	0.00	0.00	0.00	0.00
9e Étage / 9th Floor	0.00	0.00	0.00	0.00	0.00	0.00	0.00	0.00	0.00	0.00	0.00	0.00	0.00	0.00	0.00	0.00	0.00	0.00
8e Étage / 8th Floor	0.00	0.00	0.00	0.00	0.00	0.00	0.00	0.00	0.00	0.00	0.00	0.00	0.00	0.00	0.00	0.00	0.00	0.00
7e Étage / 7th Floor	0.00	0.00	219.78	2,365.69	0.00	0.00	0.00	0.00	0.00	0.00	0.00	0.00	0.00	0.00	219.78	2,365.69	219.78	2,365.69
6e Étage / 6th Floor	0.00	0.00	219.72	2,365.00	712.00	7,663.90	0.00	0.00	0.00	0.00	0.00	0.00	712.00	7,663.90	219.72	2,365.00	931.72	10,028.91
5e Étage / 5th Floor	0.00	0.00	219.78	2,365.69	0.00	0.00	0.00	0.00	0.00	0.00	0.00	0.00	0.00	0.00	219.78	2,365.69	219.78	2,365.69
4e Étage / 4th Floor	0.00	0.00	219.72	2,365.00	0.00	0.00	814.60	8,768.28	0.00	0.00	576.60	6,206.47	0.00	0.00	1610.92	17,339.75	1610.92	17,339.75
3e Étage / 3rd Floor	0.00	0.00	219.78	2,365.69	0.00	0.00	35.40	381.04	157.00	1,689.93	15.60	167.92	157.00	1,689.93	270.78	2,914.65	427.78	4,604.59
2e Étage / 2nd Floor	268.00	2,884.73	1,737.00	18,696.91	0.00	0.00	47.70	513.44	0.00	0.00	143.60	1,545.70	268.00	2,884.73	1928.30	20,756.05	2196.30	23,640.78
RDC 2 / Ground Floor 2	215.00	2,314.24	295.00	3,175.35	165.00	1,776.05	0.00	0.00	0.00	0.00	241.00	2,594.10	380.00	4,090.29	536.00	5,769.46	916.00	9,859.74
RDC 1 / Ground Floor 1	0.00	0.00	0.00	0.00	237.00	2,551.05	1408.00	15,155.59	0.00	0.00	0.00	0.00	237.00	2,551.05	1408.00	15,155.59	1645.00	17,706.63
AIRE TOTAL D'AGRÉMENT (m²) *TOTAL AMENITY AREA (m²)*	483.00	5,198.97	3,130.77	33,699.35	1,114.00	11,991.00	2,305.70	24,818.35	157.00	1,689.93	976.80	10,514.19	1,754.00	18,879.90	6,413.27	69,031.88	8,167.27	87,911.78

A.2 Building Construction Confirmation

Brandrick, Robert

From: Carol Bandar <cbandar@neuf.ca>
Sent: Thursday, July 4, 2024 7:36 AM
To: Wu, Michael
Cc: Kilborn, Kris; Brandrick, Robert; Alma Tralo; Frank Puentes
Subject: RE: 2948 Baseline Road Confirmation

Hi Micheal,

Please find our responses in red below,

1. Are the unit type breakdowns listed in the statistics table part of the June 21 drawing set (in screenshot below) the one we are to use to estimate the population? Yes, Please use the numbers in this table.

INFORMATION SUR LE PROJET - *PROJECT INFORMATION*
12762 **Baseline 3456** *Projet Glo*

Province /*Province*	Ontario		
Zonage / *Zoning*	City of Ottawa zoning By-law No. 2008-250		
Superficie du Lot / *Property Area*	15,962.4 m² / *sq. m.*	171,819	pi² / *sq. f*

STATISTIQUES SUR LE PROJET / *PROJECT STATISTICS*	**Tour 6 / *Tower 6***	
Hauteur du Bâtiment (m)/ *Building Height* (m)	104.8m (32 étages / storeys)	91.2 m (

STATISTIQUES DES UNITÉS / *UNIT STATISTICS*	**Tour 6 / *Tower 6***	
Studio / *Bachelor*	28	
1 Chambre / *1 Bedroom*	158	
2 Chambres / *2 Bedrooms*	121	
3 Chambres / *3 Bedrooms*	4	
Total Number of Units	311	

2. Could you confirm the following information for the proposed buildings? We would need them to support the fire flow calculations.
   a. Construction type. Non-combustible, Sprinklered.
   b. Confirmation that the vertical openings (between floors) are going to be **protected** per the fire code requirements outlined in the Ontario and National Building Codes and whether the building will be sprinklered.
   Yes. The vertical openings (between floors) will be **protected** per the fire code requirements outlined in the Ontario and National Building Codes. Yes, the building will be sprinkled.

3. Could the locations of the fire department connections be identified in the ground floor plans?
   We have not identified the locations yet. Frank has asked Mike to keep this as an item that will be developed in future phases of the project. Please comment if you believe that we need to have this item resolved for SPA .

Let me know if you have any further questions,

Thank you,

CAROL BANDAR, OAQ, B.ARCH , LEED Green Associate
Architecte. Architect
T 514 847 1117 F 514 847 2287
630, boul. René-Lévesque O. 32e étage, Montréal (QC) H3B 1S6
NEUF ARCHITECTES INC. Confidentialité + Transmission
Montréal. Ottawa. Toronto

50 ANS ET TOUJOURS NEUF . 50 YEARS AND STILL NEUF

From: Wu, Michael <Michael.Wu@stantec.com>
Sent: July 4, 2024 8:30 AM
To: Carol Bandar <cbandar@neuf.ca>
Cc: Kilborn, Kris <kris.kilborn@stantec.com>; Brandrick, Robert <Robert.Brandrick@stantec.com>
Subject: RE: 2948 Baseline Road Confirmation

> You don't often get email from michael.wu@stantec.com. Learn why this is important

Good morning, Carol, just a quick follow up on when we can receive the confirmation on the items below.

Thank you,

Michael Wu EIT
Civil Engineering Intern, Community Development

Direct: 1 (613) 738-6033
Michael.Wu@stantec.com

Stantec
300-1331 Clyde Avenue
Ottawa ON K2C 3G4

The content of this email is the confidential property of Stantec and should not be copied, modified, retransmitted, or used for any purpose except with Stantec's written authorization. If you are not the intended recipient, please delete all copies and notify us immediately.

From: Wu, Michael
Sent: Thursday, June 27, 2024 10:09 AM
To: cbandar@neuf.ca
Cc: Kilborn, Kris <kris.kilborn@stantec.com>; Brandrick, Robert <Robert.Brandrick@stantec.com>
Subject: 2948 Baseline Road Confirmation

Good morning, Carol:

Hope this email finds you well. We have a couple of items we would like to confirm for the proposed buildings at the 2948 Baseline Road site.

1. Are the unit type breakdowns listed in the statistics table part of the June 21 drawing set (in screenshot below) the one we are to use to estimate the population?

INFORMATION SUR LE PROJET - *PROJECT INFORMATION*		
12762	Baseline 3456	*Projet Glob*

Province / *Province*	Ontario		
Zonage / *Zoning*	City of Ottawa zoning By-law No. 2008-250		
Superficie du Lot / *Property Area*	15,962.4 m² / *sq. m.*	171,819	pi² / *sq. ft*

STATISTIQUES SUR LE PROJET / *PROJECT STATISTICS*	Tour 6 / *Tower 6*	
Hauteur du Bâtiment (m)/ *Building Height* (m)	104.8m (32 étages / storeys)	91.2 m (

STATISTIQUES DES UNITÉS / *UNIT STATISTICS*	Tour 6 / *Tower 6*	
Studio / *Bachelor*	28	
1 Chambre / *1 Bedroom*	158	
2 Chambres / *2 Bedrooms*	121	
3 Chambres / *3 Bedrooms*	4	
Total Number of Units	**311**	

2. Could you confirm the following information for the proposed buildings? We would need them to support the fire flow calculations.
   a. Construction type.
   b. Confirmation that the vertical openings (between floors) are going to be **protected** per the fire code requirements outlined in the Ontario and National Building Codes and whether the building will be sprinklered.
3. Could the locations of the fire department connections be identified in the ground floor plans?

Thank you,

Michael Wu EIT
Civil Engineering Intern, Community Development

Direct: 1 (613) 738-6033
Michael.Wu@stantec.com

Stantec
300-1331 Clyde Avenue
Ottawa ON K2C 3G4

The content of this email is the confidential property of Stantec and should not be copied, modified, retransmitted, or used for any purpose except with Stantec's written authorization. If you are not the intended recipient, please delete all copies and notify us immediately.

Caution: This email originated from outside of Stantec. Please take extra precaution.

Attention: Ce courriel provient de l'extérieur de Stantec. Veuillez prendre des précautions supplémentaires.

Atención: Este correo electrónico proviene de fuera de Stantec. Por favor, tome precauciones adicionales.

Appendix B City Comments

File Number: D02-02-23-0046 & D07-12-23-0073

August 25, 2023

Thomas Freeman
Fotenn

Via email: freeman@fotenn.com

Subject: Zoning By-Law Amendment & Site Plan Control Applications – 2946 Baseline Road – 1st Review Comments

Please find below the consolidated comments from the review of the above noted application.

1. Engineering

List of Report(s) reviewed:

- **Servicing and Stormwater Management**, prepared by Stantec, Project No.160401676, date May 25, 2023.

Comments:

1.1. What is the water meter configuration for the proposed development?

1.2. Please include detail calculations on how the effective area was calculated in the fire suppression demand. Info only: A standard condition in the development agreement is included that requires that the building fire suppression demand outlined in the servicing study corresponds with the building permit design. The City would recommend coordinating early in the design process to avoid revisions and delays to the construction.

> "The Owner acknowledges and agrees that the City's boundary conditions were provided for the subject development site setting out the available Select One water supply. The Owner further acknowledges and agrees that prior to building permit issuance, a letter shall be prepared by a qualified Building Code professional, licensed in the Province of Ontario, and provided to the General Manager, Planning, Real Estate and Economic Development confirming the plans submitted for building permit issuance have incorporated any and all requirements of the Fire Underwriters Survey, 2020, or as amended, to achieve the low construction coefficient used within the proposed building design."

1.3. The water boundary conditions provided by the City indicate the pressure at the property boundary. A watermain analysis should be included to demonstrate the pressure at each building/townhouse and ensure there are no stagnation concerns.

1.4. The sanitary demands have been submitted to confirm the capacity of the system.

1.5. The internal cistern design can be designed by mechanical professional; however the design would need to be provided as part of the approvals and specify a product. The design should indicate the available storage volume, freeboard before emergency overflow is initiated, the release rate will not exceed the maximum allowable, product specifications, and documentation how the TSS will be removed.

1.6. Please demonstrate the offsite CBs in the drive aisle can accommodate the additional drainage from UNC-4,UNC-5, UNC-6. As per the Sewer Design Guidelines no surface ponding is permitted in the 2-year event and maximum of 300mm in the 100-year event.

- **Geotechnical Report**, prepared by Paterson Group, project PG6107, Rev 1, dated May 8, 2023.

1.7. A1. Info only: The City prefers that all geotechnical information be contained in a single document. Any comments or amendments should be reflected in a revised report.

1.8. Some areas exceed the maximum grade raise restrictions of 2.0m. Please coordinate with the civil designer to confirm if the proposed grade raises are acceptable.

1.9. Please provide recommendations if blasting may be used. Recommendations should impact to include surrounding structures, watermains, sewers, etc.

- **Servicing Plan, SSP-1,** prepared by Stantec, Project No.160401676, date May 25, 2023.

1.10. Please clarify why two water services for each building? The proposed development is providing redundancy by looping the water service on two different streets, which will allow the City to decommission one watermain while the watermain on the other street remains operational.

1.11. Please clarify why the storm sewer infrastructure on Baseline is being removed. Based on City records the storm sewer and structures on Baseline appear to be City owned and should be maintained.

- **Grading Plan, GP-1,** prepared by Stantec, Project No.160401676, date May 25, 2023.

1.12. Tower 4: There is a significant grade on the West side of the building parking area. Recommended slopes are 3H:1V or terraced. Are guardrails/vehicle barriers being provided at the top of the parking area? (see attached plan)

1.13. Please provide emergency overland drainage arrows either on the Grading Plan or Stormwater Drainage Area Plan.

1.14. Please indicate the ponding elevations for the 2-yr and 100-yr storm events. Or please confirm there is no surface ponding in the 2-year event on the parking area.

1.15. A minimum of 300mm freeboard is required between the building FFE and the adjacent 100-yr ponding elevation. Some T/G elevations are shown less than

300mm freeboard. Should additional freeboard be provided and will the area drains be able to move water fast enough without causing ponding?

1.16. Please indicate the slopes along all City boulevards. There appear to sidewalks that are greater than 2% lateral slope. The longitudinal slope of the sidewalk should match the surrounding road slopes (2-5%). (see attached plan)

1.17. Some areas exceed the maximum grade raise restrictions of 2.0m. Please coordinate with the geotechnical engineer to confirm if the proposed grade raises are acceptable.

Additional Comments:

1.18. The plan number is 19020.

1.19. As per the City of Ottawa Water By-Law and Sewer Connection By-Law, all services crossing private property must be within easements. Please provide a legal agreement to demonstrate the site has legal access to the watermain.

1.20. The existing Ministry of Environment Conservation and Parks Form 1 will need to be amended for the private watermain.

1.21. Please complete the water data card.

Feel free to contact Rubina Rasool, Infrastructure Project Manager, for follow-up questions.

2. Transportation

Comments:

Transportation Engineering Services

3.1.1 Trip Generation

- "Appendix E of the ITE Trip Generation Manual 3rd edition was used to determine pass-by rates. Pass by trips were calculated after the internal reduction factor was applied." Please provide the ITE worksheets as separate appendix for pass by rates.

4.1.1 Provide reference to TDM Design checklist.

4.3.1 Boundary Street

- Use SC7.1 for the private approaches giving paramountcy to the pedestrian mode.

Transit

- Section 2.1.1 Existing Transit Network:
  - Please indicate the frequency of Route 57 based on current schedules for this portion of the route. Please remove reference to Route 283 - it operates along Hwy 416 and does not stop near the subject site.
- Section 4.2 Parking:

- Transit Services is supportive of the reduced residential parking rate and appreciates the forward-looking rationale.

- Section 4.7.1 Transit Route Capacity:
  - Please contact octdevelopmentreview@ottawa.ca to request ridership data to verify the assumptions in this section.
- Site Plan:
  - The truck loading lay-by in the breezeway should be available for use by ParaTranspo for accessible pick-up/drop-off to both buildings 5 and 6.

Additional Comments:

2.1. Access to development:

2.1.1. Please indicate the frequency of Route 57 based on current schedules for this portion of the route. Please remove reference to Route 283 - it operates along Hwy 416 and does not stop near the subject site.

2.2. Proximity to transit:

2.2.1. Please contact octdevelopmentreview@ottawa.ca to request ridership data to verify the assumptions in this section.

2.3. Parking requirements:

2.3.1. Transit Services is supportive of the reduced residential parking rate and appreciates the forward-looking rationale.

2.4. Required ROW width:

2.4.1. Please label ROW on Site Plan

Feel free to contact Mike Giampa (mike.giampa@ottawa.ca) , Transportation Project Manager, for follow-up questions.

3. Noise

Comments:

3.1. No Comments

Feel free to contact Mike Giampa, Transportation Project Manager, for follow-up questions.

4. Planning

Comments:

4.1. Please add file numbers (D02-02-23-0046 & D07-12-23-0073) to all plans and studies

4.2. Baseline Road has a protected ROW of 36.3m at this location. Please properly label the road widening on both the Site Plan and the Landscape Plan

4.3. The Site Plan requires a note stating where property boundary & topographic information was derived from.

4.4. Please provide more information regarding the use of the angular plane as a planning tool for the proposed height.

4.4.1. The angular plane is demonstrated, however there is no comment in the Planning Rationale discussing its function and guidance as a tool for rationalizing additional height.

4.4.2. It is recommended that the angular plane be demonstrated from the rear-yard of the neighbouring low-rise development.

4.5. It is recommended that the building height be lowered to approximately 15 or 16-storeys. This height would provide an appropriate transition from neighboring communities and previous development, as well as have less impact on shadows and privacy on the surrounding neighbourhood. Please see further comments from Urban Design below.

4.6. There is come confusion regarding the height of the podium for Phase 5 & 6. The Site Plan refers to 4 storeys, the Planning Rationale refers to 5 storeys, and the building elevations demonstrate 6 storeys. Please confirm.

4.7. The 6-storey podium height is imposing and inconsistent with the surrounding context. A 2/3-storey podium would provide a more appropriate transition to the surrounding neighbourhood as well as provide consistency with your first phase of development. (See comments from Urban Design below).

4.7.1. The wind study presents an 'inconvenient' condition (level 7) atop the podium amenity. Could this condition be improved (and therefor a more functional amenity space) with a lower podium?

4.7.2. Same comment applies to the 4 storey podium on Tower 4. A 2-3 storey podium is preferred.

4.8. Please provide further rationalization as to why increased floor plate sizes are appropriate for this site. OP policies suggest floor plates generally be limited to 750 m^2, however both towers are 811 and 859 m^2 respectively. Lowering the floor plates would have a positive impact on sun/shadows across the site and create a

4.9. A parking impact assessment study is required. This assessment should address parking spillover is required to further rationalize the drastic reduction in required parking spaces provided.

4.9.1. Given the site context, parking rates for Outer Urban areas (Area B, on Schedule 1A) could be considered.

4.10. Concerns with the safety of perpendicular parking on the private roadway, given it is the main access into the site for both trucks and regular traffic. Please explore the possibility of converting these spaces to parallel parking spots.

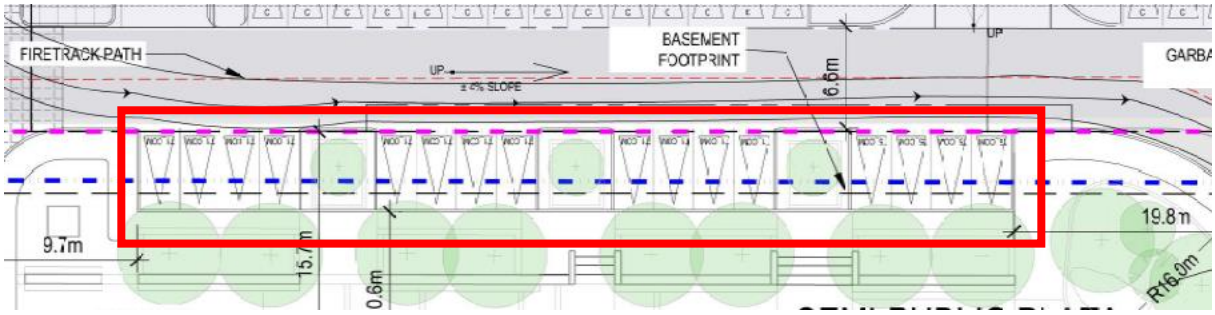

4.11. Per section 2.2.2 of the Official Plan, the City is working towards higher sustainability performance for new buildings. Please consider integrating the following opportunities in your proposal: electric vehicle charging stations, solar panels, green/sustainable roofs, cooling landscape & pavement.

4.12. The windy study discusses the use of plantings and the use of landscape design on the podium for improved wind conditions, however no landscape details are included on the landscape plan. Please provide further information on proposed mitigation measures for wind on the terrace.

4.13. Page 43 of the Planning Rationale refers to zoning compliance of zone GM[62] F(0.25), however this is not the current zoning for the site. Please provide clarification.

4.14. Please provide further information regarding the phasing of the site. Delays (or abandonment) of Towers 5 and 6 would result in development that detracts from the planned urban fabric of the Corridor.

4.15. We appreciate the inclusive building plans through all phases; building for all ages from senior residences in Phase 1, to the daycare provided in Phase 4, and the addition of family sized units.

4.16. The planning rationale refers to the affordable housing policies of the Official Plan but has not expressed the intent to provide affordable housing units.

- 4.16.1. In reference to Policy 4.2.2, we would encourage that 140 of the 700 units be made affordable (98 = core affordable | 42 = market affordable) and distributed between the three towers.
- 4.16.2. We appreciate the addition of 3 bedroom units; is there any opportunity to include more units of this type? 2+den units?

4.17. This application is subject to the Community Benefits Charge By-law.

The by-law can be found here: [Community Benefits Charge By-law (By-law No. 2022-307) | City of Ottawa]

5. Conservation Authority

Comments:

5.1. No Comment

6. Environmental and Trees

Landscape Plan (Environmental Planner Review)

Comments:

6.1. The landscape plan does not offer any recommended quantities for the trees & shrubs listed in their plant list. Please elaborate and revise.

6.2. Given the proximity to Graham Creek (less than 80m), we are pleased to see most of the recommended vegetation is locally appropriate native species, however, we are concerned with potential impacts of two invasive non-native species. These species could compromise the local biodiversity of the Graham Creek corridor and downstream natural features. Please replace *Salix purpurea nana 'gracilis'* (Blue Arctic Willow) with locally appropriate native alternative species, such as but not limited to, *Salix discolor* (Pussy Willow) or *Salix lucida* (Shining Willow).

6.3. Please replace *Juniperous sabina* (Savin Juniper) with locally appropriate native alternative species, such as but not limited to, *Juniperous communis* (Common Juniper), *Juniperus virginiana* (Eastern Red Cedar) or *Taxus canadensis* (Canada Yew).

Site Plan (Environmental Planner Review)

6.4. The architectural drawings and elevations (Neuf 25May2023) illustrate lots of glass on the buildings and near the terraces. I recommend the applicant demonstrate they have reviewed and incorporated design elements from the City's Bird-Safe Design Guidelines into their proposal. This includes the transparency and reflectivity of the glass, lighting and landscaping.

For any questions or concern regarding the environmental review, please contact Sami Rehman (Environmental Planner) at sami.rehman@ottawa.ca or 613.580.2424 ext./poste 13364

7. Urban Design

7.1. UDRP meeting was scheduled on July 7, 2023. Please see the attached UDRP recommendations sheet.

7.2. The applicant team has prepared a proposal that includes many supportable features such as the POPs and park space, commercial spaces opening to the POP's, daycare space, a variety of unit sizes and a context sensitive materiality approach. However, there are concerns with the proposed height, floorplate size and massing that require attention.

7.3. In the Planning Rationale conclusion section, the first bullet speaks to a development in the downtown core with heritage buildings. *Please clarify.*

7.4. Additional discussion and rationale are required in the Planning Rationale to address the projected angular plane, specifically from the north and west. The angular plane is used in the High-Rise Guidelines and Official Plan to direct transition to adjacent low-rise areas from high-rise buildings. This tool isn't to stop density but rather provide a proposal that is context sensitive to the surrounding area.

Angular Plane, Floorplate, & Height:

7.5. The proposed tower separation is appreciated and supported.

7.6. The site is classified in Table 5 of the Official Plan as a Tier 3 – Local (Major) Design Priority Area. Policy 4.6.1(5) speaks to the consideration of four-season comfort, enjoyment, pedestrian amenities, and the micro-climate impacts in the winter. The proposal does include a visually interesting proposal that uses materials reflecting the surrounding context, this is supported. However, the wind study demonstrates that further mitigation measures are required as pedestrian level wind levels in the spring, fall and winter prove to be unacceptable in some locations (namely between the first and second phase development). Methods of mitigating wind levels should be explored by lowering the Phase 6 tower, introducing setbacks and reducing the podium to 3 storeys.

7.7. The floor plate is not discussed anywhere in the Design Brief. It is mentioned in the Planning Rationale but not specific to which tower (why are they different sizes?). These floor plates are not acceptable given the wind impacts (which are not minimal) throughout the seasons and the shadow analysis provided does not demonstrate minimal shadow impacts as discussed in the Planning Rationale. The High-Rise Design Guidelines, while a guiding document, state a maximum floor plate for a high-rise tower should be 750 sq.m.

7.8. As defined in the High-Rise Design Guidelines – Floor plate: The total area of a high-rise building floor measured from the exterior of the outside walls and includes the total floor area occupied by balconies. The proposed floorplates should be reduced to as close as 750 sq.m. as possible according to the definition above.

7.9. OP Policy 4.6.6(8) states that high-rise building floorplate sizes should generally be limited to 750 sq.m., please adjust the floorplate sizes accordingly.

7.10. The proposal does not include appropriate transition to the adjacent low-rise areas except to the neighbourhood conditions to the south. It is acknowledged in the Planning Rationale and Design Brief that the current low-rise conditions to the west and north (Brookhaven and Qualicum community) will likely not change, yet there isn't a response to the angular plane or transition to these communities.

7.11. Please revise Tower 6 height to be closer aligned with the angular plane study ~ 15-storeys or lower.

7.12. Please consider massing that includes building setbacks above the podium for Towers 5 and 6. Including some setbacks above the podium may also improve the wind study projections.

Perspectives

7.13. Please provide more detail and revised renderings to demonstrate the ground plane conditions of Phase 4 parking garage entrance on both the west and east sides of the building. They do not reflect the site plan.

7.14. There are no perspectives showing the relationship between the proposed towers and the completed towers on the adjacent site. Please provide.

7.15. There are no perspectives showing the relationship between the proposal and the existing homes on Brookhaven Court. There should be perspectives showing the relationship from the north, south (given the grade change) and from the centreline of Brookhaven (within the court). See below.

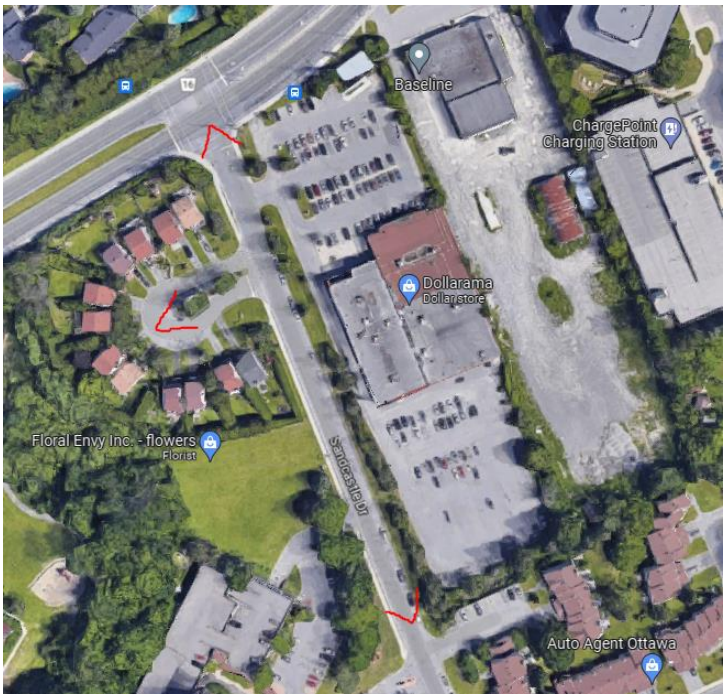

Shadows

7.16. The Shadow Study is not completed to City standards as defined in the terms of reference. The Shadow Analysis must show the as-of-right height and massing, showing the outline of as-of-right heights and the proposed building heights.

7.17. The Shadow Study must show the full extent of the proposed height shadowing, this means showing the extent of the shadowing on Qualicum neighbourhood north of Baseline.

Podium

7.18. The podium height for Tower 4 should be reduced to 3 storeys unless perspectives examining the context leading into the south community demonstrates the proposal is context sensitive.

7.19. The podium for Phase 5 and 6 should reflect the context of the existing homes on Brookhaven and be lowered to 3 stories with the townhouse condition extended along the west façade.

Public Realm

7.20. Per policy 4.6.3(2) of the Official Plan, please explain how the proposed POP is publicly accessible given there are stairs proposed in the Site Plan and Landscape Plan. Please identify accessible features.

7.21. Please integrate the parking ramp within the building.

7.22. Please consider removing the four parking stalls closest to the POPs and park. Cars backing out or pulling out would be in the middle of a T-intersection and this would reduce potential conflict.

7.23. The current podium proposal does not provide a pedestrian scale given the surrounding context. While the Design Brief analysis barely shows the low-rise context to the west, these dwelling units are likely to not change in the immediate future and a context-sensitive approach is required.

7.24. Please provide more information on the main entrance conditions for Phase 6 and 5.

7.25. Please consider including traffic bump-outs along the east private road adjacent to the first phase. Traffic calming measures should be explored given the amount of parking in tandem with outdoor plazas.

Landscape Plan

7.26. The landscape plans propose an interesting and dynamic park space and public realm.

7.27. Please label the Baseline ROW widening on the plans.

7.28. The LP does not identify which tree species is proposed along Baseline, when this is decided please keep in mind that overhead wires are present.

7.29. To ensure long term viability of the trees with the ROW and areas where the parking garage is below, silva cells are to be implemented.

7.30. Please include trees along Phase 4 in the private ROW.

7.31. The elevations (A208), state the amenity area on the podium is to see the landscape plans. Please provide more information on the amenity area. Elevations and perspectives of the proposal include trees, details need to include how the soil volume will be provided and how this will be implemented given this is a phased development.

7.32. The proposal includes several locations for potential public art or wayfinding, please provide more details on these locations.

7.33. Please identify accessible features in the plans. It appears that the POPs and park may not have pathways that are accessible.

Pedestrian Level Wind Study

7.34. In the Results and Discussions section of the Pedestrian level wind study, the wind comfort levels for the public park, semi-public plaza (POP), and common amenity terrace (podium) identify that mitigation measures are required to make these

spaces suitable for their intended use. There is concern that this proposal speaks to an enhanced pedestrian experience in part to support the increased height but its not acceptable to have these public/amenity spaces uncomfortable throughout the year. This modelling does not meet the standards for park space or the semi-public amenity space given wind speed levels are exceeded for more than 20% of the time. The wind study states that if wind speed levels are exceeded for more than 20% of the time, the activity level would be judged to be uncomfortable by most people. Since these spaces are classified as sitting/standing in the desired comfort class, these conditions require mitigation. The study states that mitigation measures are dependent on the programming of the areas, which this mitigation strategy could be developed by the landscape architect and building design. Earlier comments have requested changes to the building height and massing to understand wind impacts, the wind study recommends a 4m landscape buffer along the west perimeter of the public park. Given that this park space will be conveyed to the City, the applicant should be proposing mitigation measures outside of parkland to mitigate the issue that is a result of the proposal rather than placing the responsibility of mitigation onto the City to maintain.

7.35. Pages 10-12 provide the following:

- "wind comfort conditions during the typical use period over the public park to the southwest of Phase 5 are predicted to be suitable for sitting to the north and near the southeast corner with standing conditions throughout the remainder of the area. Within the windier areas, conditions are predicted to be suitable for sitting for at least 70% of the time during the same period, where the target is 80% to achieve the sitting comfort class".
- for the semi-public plaza to the southeast of Phase 5 "within the windier areas, conditions are predicted to be suitable for sitting for at least 65% of the time[…], where the target is 80% to achieve the sitting comfort class".
- The report also states Phase 5 and 6, Level 7 Common Amenity Terrace require mitigation measures, currently the study found that the amenity space is suitable for sitting near the tower but standing throughout the remainder of the area and some areas suitable for strolling.
    - Please provide an updated study that examines a lower tower height along Baseline (Phase 6) and lower podium height (3 storeys) to understand if this improves projections.
    - In the next submission, details on the wind screens for the amenity terrace and daycare terrace are required.

7.36. Other notes on the wind study:

- The wind study demonstrates that the proposal creates a 'strolling' condition for the primary entrances of Phase 1 whereas the study states that primary entrances should be standing. This needs to be addressed, the proposal cannot cause undue impacts on the adjacent site.

- The wind study presents conclusions that require further analysis before it can be deemed acceptable. Please provide a report that studies a lower Phase 6 tower and 3-storey podium as a method to mitigate pedestrian wind levels.

8. Parkland

The timeline below demonstrates Parks and Facilities Planning's numerous requests to provide an acceptable park location that meets parkland requirements.

Prior to 1st pre-consultation, meeting DR Planning directed applicant that *CIL would* be owing for the site as requested for Ph 1.

May 25th 2021 PFP Planner met with DR Planner identifying that *Parkland would* be required on the development site. Parkland was not provided on the concept plan for pre-consultation.

May 27, 2021 at pre-consultation meeting PFP applicant informed that maximum parkland dedication was required. Park would require street frontage on Sandcastle Dr. and pathway access for pedestrians.

July 15 2021 Meeting minutes sent to applicant, by DR Planner - Planning comments listed, "Cash-in-lieu of parkland and associated appraisal fee will be required as a condition of approval as per the Parkland Dedication By-law." No Park comments requiring parkland included in minutes as per meeting or email.
July 16 2021 PFP comments as indicated in the May 27 meeting sent to applicant requiring "max. parkland dedication with park located with street frontage on Sandcastle Dr. and pathway access for pedestrians."

December 2021- Applicant follow-up with concept identifying park/plaza internal to the site between the middle tower and surface parking spaces. PFP – response location not acceptable.

July 2022- Revised concept still shows park in internal location. PFP – response location not acceptable

August 25 2022- PFP provides concept with alternative locations with frontage on Sandcastle and preferred option also adjacent to existing residential development.

Post Pre-consultation meetings comments sent requiring parkland with concept requesting a location that meets park requirements and location.

August 31 2022 – Alternate location proposed by applicant and not approved by PFP. Request for meeting discuss changes.

February 2023 – March 2023 Meetings with the Landscape Architecture consultant. Follow-up emails with drawings requesting revised location and Facility Fit plan - no plan and no changes.

April 2023 - Drawings sent to planner and applicant identifying PFP park location prior to SPA and ZA submission - see drawings below.

July 7 2023- Urban design review panel – PFP proposed park location request for discussion at Panel review - not included in review.

No park location changes made by applicant and identified in Site Plan and Zoning applications.

8.1. Parks and Facilities Planning requires the provision of parkland based on the Parkland Dedication By-law requirements for residential/commercial mixed-use, to a max. of 10% gross land area for residential and 2% for commercial rate.

The site plan park/plaza proposed is identified as 1185 m2.

Based on the calculations for parkland dedication the park is over dedicated by 21.92 m2.

Parkland dedicated as per submission	1185	m2
Required Conveyance of Parkland	1163.08	m2
Proposal is over-dedicated by:	21.92	m2

8.2. The Zoning Amendment and Site Plan Application propose a park location that functions as an urban plaza, surrounded by Sandcastle Street to the west, on the south side, the driveway entrance to the exterior surface parking spaces and underground garage entrance, and high-rise buildings. This proposed park location acts as a landscape feature and transition space of hardscape with raised planters and seating, accommodating businesses and pedestrian traffic from street to interior surface parking areas and businesses between Phases 1(currently under construction) and Phase 2 (this application).

8.3. The proposed park does not provide the amenities suggested by PFP to function as a City park, servicing both the existing community residents and the projected 1200+ new residents in Phase 2, nor does it not consider the number of residents projected in Phase 1.

8.4. As indicated during the pre-consultation process, Parks and Facilities Planning maintains that the best location for the City Park is the south end of the site, adjacent to the private amenity space of the proposed Ph. 2 development and the existing residential development. This location provides a transition from existing community to the new development and can clearly be identified as a City park, a welcome public place with programming to feature a small playground, potential for a water play feature, trees, pathways, grass, and seating. See diagram below, sent to developer during pre-consultation.

8.5. As indicated in previous discussions and comments during pre-consultations, the south location provides a green and natural grassed space including new and

existing trees, providing relief from the intensity of the reflective heat and wind tunnel effect of the high-rise buildings, exhaust from vehicles driving on the street or driveway, idling vehicles in the parking lot, or lining up to enter or exit the underground parking.

8.6. Existing trees on the south edge of the development were evaluated by Forestry in 2021, with recommendation that the trees are retained.

8.7. During pre-consultation, examples were provided of existing City parks developed on slopes and located adjacent to new private amenity space (new developments) and existing residential. The new parks provide as transition and unifying spaces between the old and new communities. The park examples clearly show parks separated from road and traffic, provide a safe and quiet area away from the vehicles and exhaust fumes and are small but welcoming places of respite from the intensity of the high rise and midrise development.

8.8. PFP requested a facility fit plan during pre-consultation meetings illustrating recommended features and amenities. The submission illustrates an urban plaza void of park amenities such as small playground /water play feature, accessible pathways, benches, lawn and trees.

8.9. As indicated in previous comments and discussions with the applicant, the park location must be free of encumbrances: no stormwater management facilities, overland flow routes, and/or encumbrances of any kind, such as, but not limited to, retaining walls, utility lines, agreements and/or easements of any kind shall be located on, under, or above dedicated Park Land, save and except any utilities lines required by the City, and shall be removed and/or released from the Park Land, prior to the conveyance of the said lands to the City. Any utilities presently located within the Park Land, must be relocated at the Owner's sole expense.

8.10. Parks Draft conditions of Site Plan will be provided when acceptable park location has been provided.

8.11. Please see the drawings below illustrating Parks and Facilities Planning's proposed park location as provided to the applicant during the pre-consultation process.

Parks and Facilities Planning proposed park location.

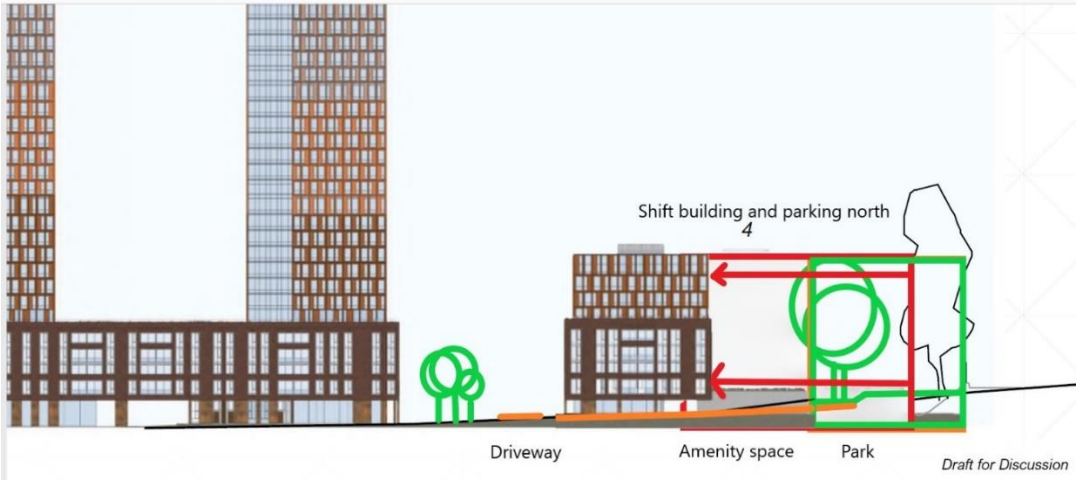

Shift building to accommodate park.

9. Transportation Services

9.1. Construction approach – Please contact the Transportation Services Department (TMconstruction@ottawa.ca) early in the zoning process to determine the ability to construct the site and copy me on this request.

10. Councillor and Community issues

10.1. Please see the attached email from Councillor Laine Johnson.

10.2. A summary of comments from members of the public is attached. Please provide a response to each theme and how the comments have been addressed.

11. Other

11.1. **Building Code Services**:

11.1.1. The maximum distance a fire hydrant is permitted to be from the building's fire department connection is 45 metres, and shall be along an unobstructed path of travel, as per Article 3.2.5.16. via 3.2.5.5., of the Ontario Building Code. Unfortunately, BCSB was unable to identify the location of the fire department connection, in order to verify the design as being O.B.C. compliant in this regard.

11.1.2. As indicated, parts of the Fire Access Route (far) are shown on the parking garage roof deck. Please contact Ottawa Fire Services for confirmation of the minimum design load requirements for the parking garage roof deck. Allan.Evans@ottawa.ca

11.1.3. Please be aware that as shown on the drawings submitted for Site Plan Control Approval, the location of the building on-site may require shoring during the construction stage and possibly permanent encroachment consent. If so, please contact The ROW Permit Office (Right Of Way) at 613-580-2424 x16000 to enquire/obtain a temporary and/or permanent encroachment letter as the shoring is to be adjacent to city property.

11.1.4. Shoring details between private properties will also be reviewed by Building Code Service Branch at time of building permit application submission and will require permission(s) from the neighboring property(s) owners if any portion of the shoring is located on the neighboring property. Please ensure that the shoring details are included in the building permit application.

11.2. **Ottawa Carleton District School Board**

11.2.1. Require our standard clause to be included within the Subdivision Agreement and associated Purchase and Sale Agreement for unit. Our clause is as follows:

"The owner shall include in all Agreements of Purchase and Sale the following clause:

Prospective purchasers are informed that school accommodation pressures exist in the Ottawa-Carleton District School Board schools designated to serve this development which are currently being addressed by the utilization of portable classrooms and/or by directing students to schools outside of their community".

11.3. **Environmental Remediation**

11.3.1. Due to the proposed land use change to a more sensitive use (commercial to residential) filing an RSC is required prior to issuing a building permit for constructing new structures associated with the proposed residential development

11.4. **Waste Management**

11.4.1. No issue with the garbage rooms. The city will collect the residential portion of the building only, the commercial business will require their own garbage room and service.

11.4.2. The tri sorter shows 2 garbage bins and 1 GMP; should it not be 1 garbage,1 fiber and 1 GMP?

12. For the next submission

- The next submission should address each and every one of the comments or issues, to ensure the effectiveness and consistency of the next review.

- A cover letter must be included that states how each comment was addressed in the resubmission. Please co-ordinate the numbering of each resubmission comment, or issue, with the above noted comment number.
- Plans are to be standard A1 size (594 mm x 841 mm) or Arch D size (609.6 mm x 914.4 mm) sheets, utilizing an appropriate Metric scale (1:200, 1:250, 1:300, 1:400 or 1:500).
- All addenda or revisions to any studies or plans must be provided in PDF. All PDF documents are to be unlocked, flattened and not saved as a portfolio file.

The development review team will be happy to meet you to discuss comments and resolve issues. We highly recommend holding the comments review meeting within one week from the date of this letter. Please contact me at your earliest convenience to confirm the meeting date, time, format and location.

Should there be any other questions, please do not hesitate to contact me.

Yours Truly,
Kieran Watson

cc.
Kieran Watson, File lead
PM, Rubina Rasool
TPM, Mike Giampa
Molly Smith, Planner – Urban Design
Louise Cerveny, Parks
Sami Rehman, Environmental Planner
Timothy Beed, Fotenn

Appendix C Water Demand

C.1 Domestic Water Demand

2948 Baseline Road, Ottawa, ON - Domestic Water Demand Estimates

Site Plan provided by Neuf Architects Ltd. (2024-06-21)

Project No. 160401676 Designed by: MW

Date: 7/4/2024 Checked by: AG

Revision: 01 City File No. D02-02-23-0046

D07-12-23-0073

Population densities per Table 4.1 City of Ottawa Water Design Guidelines:		
Bachelor and 1 Bedroom	1.4	ppu
2 Bedroom	2.1	ppu
3 Bedroom	3.1	ppu
Demand conversion factors per Table 4.2 of the City of Ottawa Water Design Guidelines and Technical Bulletin ISTB-2021-03:		
Residential	280	L/cap/day
Commercial	28000	L/ha/day

Building ID	Commercial Floor Area (m²)	No. of Units	Population	Avg Day Demand		Max Day Demand [1 2]		Peak Hour Demand [1 2]	
				(L/min)	(L/s)	(L/min)	(L/s)	(L/min)	(L/s)
Building 3-4									
Bachelor		16	22	4.4	0.1	10.9	0.2	24.0	0.4
1 Bedroom		228	319	62.1	1.0	155.2	2.6	341.4	5.7
2 Bedroom		40	84	16.3	0.3	40.8	0.7	89.8	1.5
Commercial	1025			2.0	0.0	3.0	0.0	5.4	0.1
Residential Subtotal		284	426	82.8	1.4	206.9	3.4	455.2	7.6
Building 3-4 Subtotal	**1025**	**284**	**426**	**84.7**	**1.4**	**209.9**	**3.5**	**460.5**	**7.7**
Building 5									
Bachelor		115	161	31.3	0.5	78.3	1.3	172.2	2.9
1 Bedroom		122	171	33.2	0.6	83.0	1.4	182.7	3.0
2 Bedroom		50	105	20.4	0.3	51.0	0.9	112.3	1.9
3 Bedroom		6	19	3.6	0.1	9.0	0.2	19.9	0.3
Commercial	312			0.6	0.0	0.9	0.0	1.6	0.0
Residential Subtotal		293	455	88.6	1.5	221.4	3.7	487.0	8.1
Building 5 Subtotal	**312**	**293**	**455**	**89.2**	**1.5**	**222.3**	**3.7**	**488.7**	**8.1**
Building 6									
Bachelor		28	39	7.6	0.1	19.1	0.3	41.9	0.7
1 Bedroom		158	221	43.0	0.7	107.5	1.8	236.6	3.9
2 Bedroom		121	254	49.4	0.8	123.5	2.1	271.7	4.5
3 Bedroom		4	12	2.4	0.0	6.0	0.1	13.3	0.2
Commercial	844			1.6	0.0	2.5	0.0	4.4	0.1
Residential Subtotal		311	527	102.5	1.7	256.1	4.3	563.5	9.4
Building 6 Subtotal	**844**	**311**	**527**	**104.1**	**1.7**	**258.6**	**4.3**	**567.9**	**9.5**
Total Site :	**2181**	**888**	**1408**	**278.0**	**4.6**	**690.8**	**11.5**	**1517.1**	**25.3**

1 The City of Ottawa water demand criteria used to estimate peak demand rates for residential areas are as follows:

maximum day demand rate = 2.5 x average day demand rate

peak hour demand rate = 2.2 x maximum day demand rate (as per Technical Bulletin ISD-2010-02)

2 Water demand criteria used to estimate peak demand rates for commercial areas are as follows:

maximum daily demand rate = 1.5 x average day demand rate

peak hour demand rate = 1.8 x maximum day demand rate (as per Technical Bulletin ISD-2010-02)

C.2 Fire Flow Demands (FUS 2020)

Stantec

FUS Fire Flow Calculation Sheet - 2020 FUS Guidelines

Stantec Project #: 160401676
Project Name: 2948 Baseline Road
Date: 7/4/2024
Fire Flow Calculation #: 1
Description: Tower 3-4
Notes: 9-Storey Mixed-Use, sprinklered with floor assemblies / load bearing walls as 1hr rated assemblies per OBC 3.2.2.52.

Step	Task	Notes										Value Used	Req'd Fire Flow (L/min)
1	Determine Type of Construction	Type II - Noncombustible Construction / Type IV-A - Mass Timber Construction										0.8	-
2	Determine Effective Floor Area	Sum of Largest Floor + 25% of Two Additional Floors					Vertical Openings Protected?					YES	-
		5014	5014	5014								7520.58	-
3	Determine Required Fire Flow	(F = 220 x C x $A^{1/2}$). Round to nearest 1000 L/min										-	15000
4	Determine Occupancy Charge	Combustible										0%	15000
5	Determine Sprinkler Reduction	Conforms to NFPA 13										-30%	-7500
		Standard Water Supply										-10%	
		Fully Supervised										-10%	
		% Coverage of Sprinkler System										100%	
6	Determine Increase for Exposures (Max. 75%)	Direction	Exposure Distance (m)	Exposed Length (m)	Exposed Height (Stories)	Length-Height Factor (m x stories)	Construction of Adjacent Wall	Firewall / Sprinklered ?				-	-
		North	20.1 to 30	64	16	> 100	Type I-II - Protected Openings	YES				0%	2100
		East	20.1 to 30	12	2	21-49	Type V	NO				2%	
		South	10.1 to 20	22	2	41-60	Type V	NO				12%	
		West	> 30	0	0	0-20	Type V	NO				0%	
7	Determine Final Required Fire Flow	Total Required Fire Flow in L/min, Rounded to Nearest 1000L/min											10000
		Total Required Fire Flow in L/s											166.7
		Required Duration of Fire Flow (hrs)											2.00
		Required Volume of Fire Flow (m^3)											1200

Stantec

FUS Fire Flow Calculation Sheet - 2020 FUS Guidelines

Stantec Project #: 160401676
Project Name: 2948 Baseline Road
Date: 7/4/2024
Fire Flow Calculation #: 2
Description: Towers 5-6
Notes: 28-Storey and 32-Storey Mixed-Use, sprinklered with floor assemblies / load bearing walls as 1hr rated assemblies per OBC 3.2.2.52.

Step	Task	Notes										Value Used	Req'd Fire Flow (L/min)
1	Determine Type of Construction	Type II - Noncombustible Construction / Type IV-A - Mass Timber Construction										0.8	-
2	Determine Effective Floor Area	Sum of Largest Floor + 25% of Two Additional Floors					Vertical Openings Protected?					YES	-
		3294	3294	1424								4473	-
3	Determine Required Fire Flow	(F = 220 x C x $A^{1/2}$). Round to nearest 1000 L/min										-	12000
4	Determine Occupancy Charge	Limited Combustible										-15%	10200
5	Determine Sprinkler Reduction	Conforms to NFPA 13										-30%	-5100
		Standard Water Supply										-10%	
		Fully Supervised										-10%	
		% Coverage of Sprinkler System										100%	
6	Determine Increase for Exposures (Max. 75%)	Direction	Exposure Distance (m)	Exposed Length (m)	Exposed Height (Stories)	Length-Height Factor (m x stories)	Construction of Adjacent Wall	Firewall / Sprinklered ?				-	-
		North	> 30	0	0	0-20	Type V	NO				0%	204
		East	20.1 to 30	98	16	> 100	Type I-II - Protected Openings	YES				0%	
		South	20.1 to 30	24	9	> 100	Type I-II - Protected Openings	YES				0%	
		West	20.1 to 30	13	2	21-49	Type V	NO				2%	
7	Determine Final Required Fire Flow	Total Required Fire Flow in L/min, Rounded to Nearest 1000L/min											5000
		Total Required Fire Flow in L/s											83.3
		Required Duration of Fire Flow (hrs)											1.75
		Required Volume of Fire Flow (m^3)											525

C.3 Boundary Conditions

Wu, Michael

From: Rasool, Rubina <Rubina.Rasool@ottawa.ca>
Sent: June 17, 2024 08:52
To: Wu, Michael
Cc: Kilborn, Kris
Subject: RE: City File No. D07-12-23-0073 (2948 Baseline Road) Request for Sanitary Sewer Capacity Confirmation
Attachments: 2948 Baseline Road REVISED June 2024.pdf

Hello Michael,

There are no concerns for the proposed 17L/s sanitary release rate on either Baseline Road or Sandcastle Drive.

The following are boundary conditions, HGL, for hydraulic analysis at 2948 Baseline Road (zone 2W2C) with assumed to be connected to the 203 mm watermain on Sandcastle Drive and the 203 mm private connection to the 1220 mm on Baseline Road (see attached PDF for location).

All Connections:
Minimum HGL: 126.7 m
Maximum HGL: 133.0 m
Max Day + Fire Flow (166.7 L/s): 120.6 m (Connection 1), 122.7 m (Connection 2), 129.5 m (Connection 3)

These are for current conditions and are based on computer model simulation.
Disclaimer: The boundary condition information is based on current operation of the city water distribution system. The computer model simulation is based on the best information available at the time. The operation of the water distribution system can change on a regular basis, resulting in a variation in boundary conditions. The physical properties of watermains deteriorate over time, as such must be assumed in the absence of actual field test data. The variation in physical watermain properties can therefore alter the results of the computer model simulation.

Rubina

Rubina Rasool
Project Manager
Planning, Infrastructure and Economic Development Department
Development Review – West Branch
City of Ottawa
110 Laurier Avenue West Ottawa, ON K1P 1J1
613-580-2424 Ext. 24221
rubina.rasool@ottawa.ca

From: Wu, Michael <Michael.Wu@stantec.com>
Sent: June 06, 2024 9:16 AM
To: Rasool, Rubina <Rubina.Rasool@ottawa.ca>
Cc: Kilborn, Kris <kris.kilborn@stantec.com>
Subject: City File No. D07-12-23-0073 (2948 Baseline Road) Request for Sanitary Sewer Capacity Confirmation

CAUTION: This email originated from an External Sender. Please do not click links or open attachments unless you recognize the source.

Wu, Michael

From:	Wu, Michael
Sent:	June 5, 2024 16:51
To:	Rasool, Rubina
Cc:	Kilborn, Kris
Subject:	City File No. D07-12-23-0073 (2948 Baseline Road) Updated Boundary Condition Request
Attachments:	160401676-BC Request Map (2948 Baseline Road).pdf; 2024-06-05 2948 Baseline FUS Fire Flow.pdf; 2024-05-28 2948 Baseline Water Demand.pdf

Good afternoon, Rubina:

We are requesting updated boundary conditions for the proposed development at 2948 Baseline Road on account of the new site plan, which is proposed to service a total population of 1558 persons with a total of 2181 m^2 of commercial space.

The attached request map indicates the three locations we would like the boundary conditions of, with one connection point on Baseline Road and the remaining two on Sandcastle Drive.

The updated water and fire flow demands are as follows:

- Average Day Demand: 5.1 L/s (307.2 L/min)
- Maximum Day Demand: 12.7 L/s (763.8 L/min)
- Peak Hour Demand: 28.0 L/s (1677.9 L/min)
- Fire Flow Demand (2020 FUS): 166.7 L/s (10,000 L/min)

Attached are the calculation sheets and request map for your reference and review.

Please let us know if you have any questions or require any additional information.

Thanks,

Michael Wu EIT
Civil Engineering Intern, Community Development

Direct: 1 (613) 738-6033
Michael.Wu@stantec.com

Stantec
300-1331 Clyde Avenue
Ottawa ON K2C 3G4

The content of this email is the confidential property of Stantec and should not be copied, modified, retransmitted, or used for any purpose except with Stantec's written authorization. If you are not the intended recipient, please delete all copies and notify us immediately.

Boundary Conditions for 2948 Baseline Road

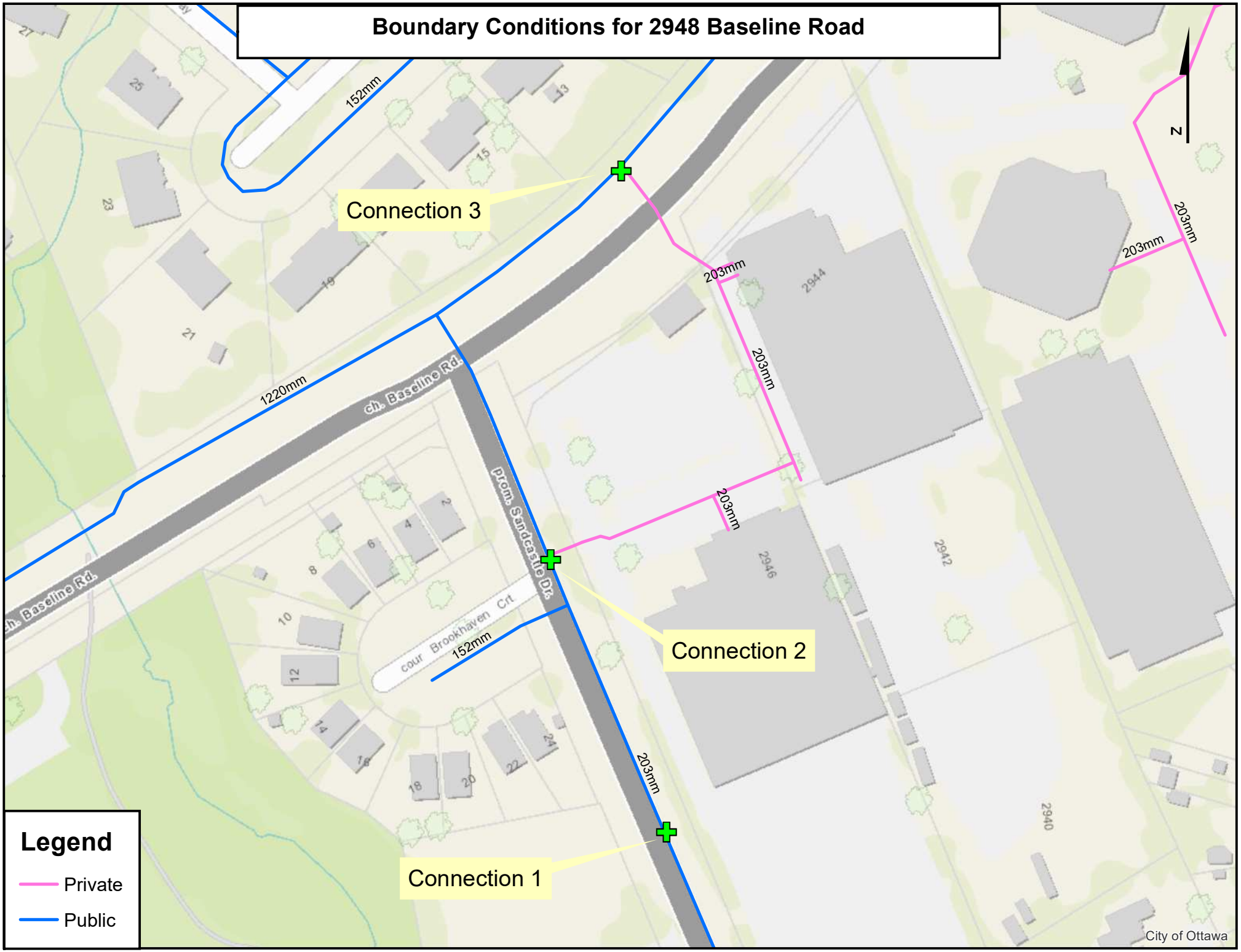

Stantec

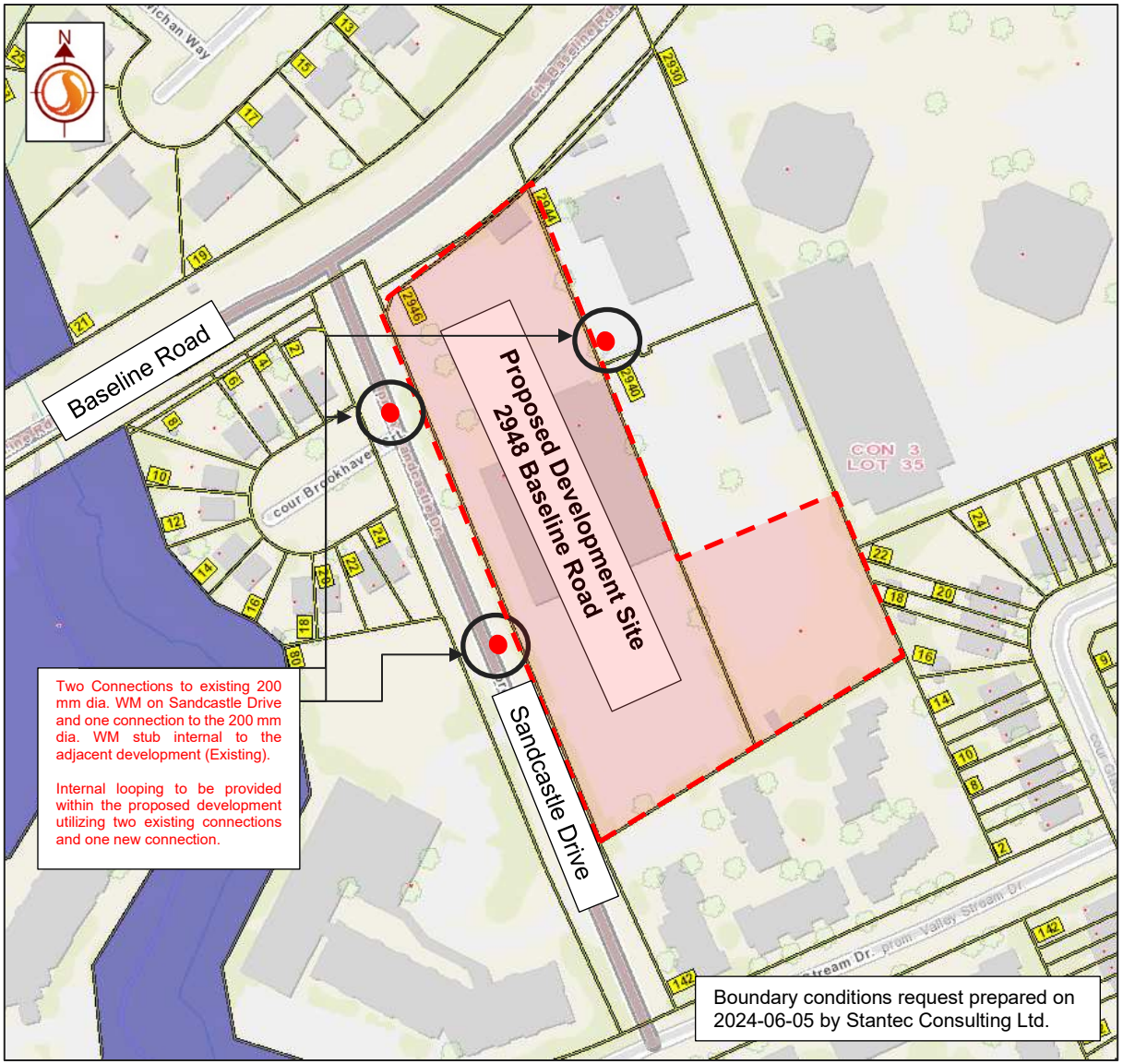

Design with community in mind

FUS Fire Flow Calculation Sheet - 2020 FUS Guidelines

Stantec

Stantec Project #: 160401676
Project Name: 2948 Baseline Road
Date: 2024-06-05
Fire Flow Calculation #: 1
Description: Tower 3-4
Notes: 9-Storey Mixed-Use, sprinklered with floor assemblies / load bearing walls as 1hr rated assemblies per OBC 3.2.2.52.
Floor area measurements taken from CAD Site Plan (2024-05-29)

Step	Task	Notes										Value Used	Req'd Fire Flow (L/min)
1	Determine Type of Construction	Type II - Noncombustible Construction / Type IV-A - Mass Timber Construction										0.8	-
2	Determine Effective Floor Area	Sum of Largest Floor + 25% of Two Additional Floors					Vertical Openings Protected?					YES	-
		5014	5014	5014								7520.58	-
3	Determine Required Fire Flow	(F = 220 x C x $A^{1/2}$). Round to nearest 1000 L/min										-	15000
4	Determine Occupancy Charge	Combustible										0%	15000
5	Determine Sprinkler Reduction	Conforms to NFPA 13										-30%	-7500
		Standard Water Supply										-10%	
		Fully Supervised										-10%	
		% Coverage of Sprinkler System										100%	
6	Determine Increase for Exposures (Max. 75%)	Direction	Exposure Distance (m)	Exposed Length (m)	Exposed Height (Stories)	Length-Height Factor (m x stories)	Construction of Adjacent Wall	Firewall / Sprinklered ?				-	-
		North	20.1 to 30	64	16	> 100	Type I-II - Protected Openings	YES				0%	2100
		East	20.1 to 30	12	2	21-49	Type V	NO				2%	
		South	10.1 to 20	22	2	41-60	Type V	NO				12%	
		West	> 30	0	0	0-20	Type V	NO				0%	
7	Determine Final Required Fire Flow	Total Required Fire Flow in L/min, Rounded to Nearest 1000L/min											10000
		Total Required Fire Flow in L/s											166.7
		Required Duration of Fire Flow (hrs)											2.00
		Required Volume of Fire Flow (m^3)											1200

2948 Baseline Road, Ottawa, ON - Domestic Water Demand Estimates

Site Plan provided by Neuf Architects Ltd. (2024-05-29)

Project No. 160401676 Designed by: MW

Date: 2024-05-28 Checked by: AG

Revision: 01 City File No. D02-02-23-0046

D07-12-23-0073

Population densities per Table 4.1 City of Ottawa Water Design Guidelines:		
Bachelor and 1 Bedroom	1.4	ppu
2 Bedroom	2.1	ppu
3 Bedroom	3.1	ppu
Demand conversion factors per Table 4.2 of the City of Ottawa Water Design Guidelines and Technical Bulletin ISTB-2021-03:		
Residential	280	L/cap/day
Commercial	28000	L/ha/day

Building ID	Commercial Floor Area (m²)	No. of Units	Population	Avg Day Demand		Max Day Demand [1 2]		Peak Hour Demand [1 2]	
				(L/min)	(L/s)	(L/min)	(L/s)	(L/min)	(L/s)
Building 3-4									
Bachelor		16	22	4.4	0.1	10.9	0.2	24.0	0.4
1 Bedroom		77	108	21.0	0.3	52.4	0.9	115.3	1.9
1 Bedroom + Den[3]		151	317	61.7	1.0	154.1	2.6	339.1	5.7
2 Bedroom		40	84	16.3	0.3	40.8	0.7	89.8	1.5
Commercial	1025			2.0	0.0	3.0	0.0	5.4	0.1
Residential Subtotal		284	531	103.3	1.7	258.3	4.3	568.2	9.5
Building 3-4 Subtotal	**1025**	**284**	**531**	**105.3**	**1.8**	**261.3**	**4.4**	**573.6**	**9.6**
Building 5									
Bachelor		115	161	31.3	0.5	78.3	1.3	172.2	2.9
1 Bedroom		70	98	19.1	0.3	47.6	0.8	104.8	1.7
1 Bedroom + Den[3]		52	109	21.2	0.4	53.1	0.9	116.8	1.9
2 Bedroom		50	105	20.4	0.3	51.0	0.9	112.3	1.9
3 Bedroom		6	19	3.6	0.1	9.0	0.2	19.9	0.3
Commercial	312			0.6	0.0	0.9	0.0	1.6	0.0
Residential Subtotal		293	492	95.6	1.6	239.1	4.0	526.0	8.8
Building 5 Subtotal	**312**	**293**	**492**	**96.2**	**1.6**	**240.0**	**4.0**	**527.6**	**8.8**
Building 6									
Bachelor		28	39	7.6	0.1	19.1	0.3	41.9	0.7
1 Bedroom		152	213	41.4	0.7	103.4	1.7	227.6	3.8
1 Bedroom + Den[3]		6	13	2.5	0.0	6.1	0.1	13.5	0.2
2 Bedroom		117	246	47.8	0.8	119.4	2.0	262.8	4.4
2 Bedroom + Den[3]		4	12	2.4	0.0	6.0	0.1	13.3	0.2
3 Bedroom		4	12	2.4	0.0	6.0	0.1	13.3	0.2
Commercial	844			1.6	0.0	2.5	0.0	4.4	0.1
Residential Subtotal		311	535	104.0	1.7	260.1	4.3	572.3	9.5
Building 6 Subtotal	**844**	**311**	**535**	**105.7**	**1.8**	**262.6**	**4.4**	**576.7**	**9.6**
Total Site :	**2181**	**888**	**1558**	**307.2**	**5.1**	**763.8**	**12.7**	**1677.9**	**28.0**

1 The City of Ottawa water demand criteria used to estimate peak demand rates for residential areas are as follows:
maximum day demand rate = 2.5 x average day demand rate
peak hour demand rate = 2.2 x maximum day demand rate (as per Technical Bulletin ISD-2010-02)

2 Water demand criteria used to estimate peak demand rates for commercial areas are as follows:
maximum daily demand rate = 1.5 x average day demand rate
peak hour demand rate = 1.8 x maximum day demand rate (as per Technical Bulletin ISD-2010-02)

3 Assumption that "1 bedroom with den" has density of 2.1 ppu, "2-bedroom with den" has density of 3.1 ppu

Stantec	Project:	2948 Baseline Road	No.	160401676
	SITE PLAN HYDRAULIC ANALYSIS			
	Revision:	02	Prepared By:	MW
	Revision Date:	5-Jul-2024	Checked By:	RB

BOUNDARY CONDITIONS (BC)	
HGL at Sandcastle Drive and Baseline Road	
Site Plan Revision Date	21-Jun-2024
Min. HGL (m)	126.7
Max. HGL (m)	133
Max. Day + Fire Flow (167 L/s)	120.6

Ground Floor Elevation (GFE) (Level 01) (m)	80.75

GROUND FLOOR (GF) PRESSURE RANGE				
	GF HGL (m)	**GF Pressure (kPa)**	**GF Pressure (psi)**	**Outcome**
	= BC HGL (m) - FFE (m)	= GF HGL (m) x 9.804 (kPa/m)	= GF Pressure (kPA) x 0.145 (psi/kPa)	If min <50 psi: booster pump If max >100 psi: pressure reducer
Minimum Normal	45.95	450.5	65.3	No Booster Pump Required
Maximum Normal	52.25	512.3	74.3	No Pressure Reducer Required

Number of Floors Above Ground	9
Approximate Height of One Storey (m)	3
Pressure Drop Per Floor (kPa)	29.4
Pressure Drop Per Floor (psi)	4.3

RESIDUAL PRESSURE RANGE IN MULTI-LEVEL BUILDINGS			
	Residual Pressure (kPa)	**Residual Pressure (psi)**	**Outcome**
Top Floor Min	215.2	31.2	Booster Pump Required
Top Floor Max	277.0	40.2	
Maximum Number of Floors Above Ground at Minimum Pressure	5		

RESIDUAL PRESSURE UNDER FIRE FLOW CONDITIONS			
	Residual HGL (m)	**Residual Pressure (kPa)**	**Residual Pressure (psi)**
Ground Floor	39.85	390.7	56.7
Top Floor	15.85	155.4	22.5

PRESSURE CHECK		
	Pressure (kPa)	**Pressure (psi)**
UNDER NORMAL OPERATING CONDITIONS		
Pressure Below Minimum	<276	<40
Pressure Below Normal	276-345	40-50
Pressure Within Normal Range	345-552	50-80
Pressure Above Normal Range	552-690	80-100
Pressure Above Maximum	>690	>100
UNDER FIRE FLOW CONDITIONS		
Pressure Below Minimum	<140	<20
Acceptable Pressure	≥140	≥20

Stantec	Project:	2948 Baseline Road	No.	160401676
	SITE PLAN HYDRAULIC ANALYSIS			
	Revision:	02	Prepared By:	MW
	Revision Date:	5-Jul-2024	Checked By:	RB

BOUNDARY CONDITIONS (BC)	
HGL at Sandcastle Drive and Baseline Road	
Site Plan Revision Date	21-Jun-2024
Min. HGL (m)	126.7
Max. HGL (m)	133
Max. Day + Fire Flow (167 L/s)	120.6

Ground Floor Elevation (GFE) (Level 01) (m)	79.6

GROUND FLOOR (GF) PRESSURE RANGE				
	GF HGL (m)	**GF Pressure (kPa)**	**GF Pressure (psi)**	**Outcome**
	= BC HGL (m) - FFE (m)	= GF HGL (m) x 9.804 (kPa/m)	= GF Pressure (kPA) x 0.145 (psi/kPa)	If min <50 psi: booster pump If max >100 psi: pressure reducer
Minimum Normal	47.1	461.8	67.0	No Booster Pump Required
Maximum Normal	53.4	523.5	75.9	No Pressure Reducer Required

Number of Floors Above Ground	28
Approximate Height of One Storey (m)	3
Pressure Drop Per Floor (kPa)	29.4
Pressure Drop Per Floor (psi)	4.3

RESIDUAL PRESSURE RANGE IN MULTI-LEVEL BUILDINGS			
	Residual Pressure (kPa)	**Residual Pressure (psi)**	**Outcome**
Top Floor Min	-332.4	-48.2	Booster Pump Required
Top Floor Max	-270.6	-39.2	
Maximum Number of Floors Above Ground at Minimum Pressure	6		

RESIDUAL PRESSURE UNDER FIRE FLOW CONDITIONS			
	Residual HGL (m)	**Residual Pressure (kPa)**	**Residual Pressure (psi)**
Ground Floor	41	402.0	58.3
Top Floor	-40	-392.2	-56.9

PRESSURE CHECK		
	Pressure (kPa)	**Pressure (psi)**
UNDER NORMAL OPERATING CONDITIONS		
Pressure Below Minimum	<276	<40
Pressure Below Normal	276-345	40-50
Pressure Within Normal Range	345-552	50-80
Pressure Above Normal Range	552-690	80-100
Pressure Above Maximum	>690	>100
UNDER FIRE FLOW CONDITIONS		
Pressure Below Minimum	<140	<20
Acceptable Pressure	≥140	≥20

Stantec	Project:	2948 Baseline Road	No.	160401676
	SITE PLAN HYDRAULIC ANALYSIS			
	Revision:	02	Prepared By:	MW
	Revision Date:	5-Jul-2024	Checked By:	RB

BOUNDARY CONDITIONS (BC)	
HGL at Sandcastle Drive and Baseline Road	
Site Plan Revision Date	21-Jun-2024
Min. HGL (m)	126.7
Max. HGL (m)	133
Max. Day + Fire Flow (167 L/s)	120.6

Ground Floor Elevation (GFE) (Level 01) (m)	78.7

GROUND FLOOR (GF) PRESSURE RANGE				
	GF HGL (m)	**GF Pressure (kPa)**	**GF Pressure (psi)**	**Outcome**
	= BC HGL (m) - FFE (m)	= GF HGL (m) x 9.804 (kPa/m)	= GF Pressure (kPA) x 0.145 (psi/kPa)	If min <50 psi: booster pump If max >100 psi: pressure reducer
Minimum Normal	48	470.6	68.2	No Booster Pump Required
Maximum Normal	54.3	532.4	77.2	No Pressure Reducer Required

Number of Floors Above Ground	32
Approximate Height of One Storey (m)	3
Pressure Drop Per Floor (kPa)	29.4
Pressure Drop Per Floor (psi)	4.3

RESIDUAL PRESSURE RANGE IN MULTI-LEVEL BUILDINGS			
	Residual Pressure (kPa)	**Residual Pressure (psi)**	**Outcome**
Top Floor Min	-441.2	-64.0	Booster Pump Required
Top Floor Max	-379.4	-55.0	
Maximum Number of Floors Above Ground at Minimum Pressure	6		

RESIDUAL PRESSURE UNDER FIRE FLOW CONDITIONS			
	Residual HGL (m)	**Residual Pressure (kPa)**	**Residual Pressure (psi)**
Ground Floor	41.9	410.8	59.6
Top Floor	-51.1	-501.0	-72.6

PRESSURE CHECK		
	Pressure (kPa)	**Pressure (psi)**
UNDER NORMAL OPERATING CONDITIONS		
Pressure Below Minimum	<276	<40
Pressure Below Normal	276-345	40-50
Pressure Within Normal Range	345-552	50-80
Pressure Above Normal Range	552-690	80-100
Pressure Above Maximum	>690	>100
UNDER FIRE FLOW CONDITIONS		
Pressure Below Minimum	<140	<20
Acceptable Pressure	≥140	≥20

Appendix D Sanitary

D.1 Sanitary Sewer Design Sheet

Stantec

SUBDIVISION:

2948 Baseline Road

DATE: 7/4/2024
REVISION: 1
DESIGNED BY: MW
CHECKED BY: AG

SANITARY SEWER DESIGN SHEET
(City of Ottawa)

FILE NUMBER: 160401676

DESIGN PARAMETERS

MAX PEAK FACTOR (RES.)=	4.0	AVG. DAILY FLOW / PERSON	280 l/p/day	MINIMUM VELOCITY	0.60 m/s
MIN PEAK FACTOR (RES.)=	2.0	COMMERCIAL	28,000 l/ha/day	MAXIMUM VELOCITY	3.00 m/s
PEAKING FACTOR (INDUSTRIAL):	2.4	INDUSTRIAL (HEAVY)	55,000 l/ha/day	MANNINGS n	0.013
PEAKING FACTOR (ICI >20%):	1.5	INDUSTRIAL (LIGHT)	35,000 l/ha/day	BEDDING CLASS	B
PERSONS / 1 BEDROOM	1.4	INSTITUTIONAL	28,000 l/ha/day	MINIMUM COVER	2.50 m
PERSONS / 2 BEDROOM	2.1	INFILTRATION	0.33 l/s/Ha	HARMON CORRECTION FACTOR	0.8
PERSONS / 3 BEDROOM	3.1				

LOCATION			RESIDENTIAL AREA AND POPULATION									COMMERCIAL		INDUSTRIAL (L)		INDUSTRIAL (H)		INSTITUTIONAL		GREEN / UNUSED		C+I+I	INFILTRATION			TOTAL	PIPE								
AREA ID NUMBER	FROM M.H.	TO M.H.	AREA (ha)	UNITS 1 BEDROOM	UNITS 2 BEDROOM	UNITS 3 BEDROOM	POP.	CUMULATIVE AREA (ha)	CUMULATIVE POP.	PEAK FACT.	PEAK FLOW (l/s)	AREA (ha)	ACCU. AREA (ha)	AREA (ha)	ACCU. AREA (ha)	AREA (ha)	ACCU. AREA (ha)	AREA (ha)	ACCU. AREA (ha)	AREA (ha)	ACCU. AREA (ha)	PEAK FLOW (l/s)	TOTAL AREA (ha)	ACCU. AREA (ha)	INFILT. FLOW (l/s)	FLOW (l/s)	LENGTH (m)	DIA (mm)	MATERIAL	CLASS	SLOPE (%)	CAP. (FULL) (l/s)	CAP. V PEAK FLOW (%)	VEL. (FULL) (m/s)
R1A (Towers 3-4)	BLDG STUB 1	MONITOR MH 1	0.501	244	40		426	0.501	426	3.41	4.70	0.103	0.103	0.00	0.00	0.00	0.00	0.00	0.00	0.000	0.000	0.05	0.501	0.501	0.17	4.91	5.9	150	PVC	DR 28	1.00	15.3	**32.07%**	0.86
G1A	MONITOR MH 1	SAN 1						0.501	426	3.41	4.70	0.000	0.103	0.00	0.00	0.00	0.00	0.00	0.00	0.307	0.307	0.05	0.307	0.808	0.27	5.02	48.3	200	PVC	SDR 35	0.50	23.6	**21.22%**	0.74
R2A (Towers 5-6)	BLDG STUB 2	SAN 2	0.329	423	171	10	982	0.329	982	3.24	10.33	0.116	0.116	0.00	0.00	0.00	0.00	0.00	0.00	0.000	0.000	0.06	0.329	0.329	0.11	10.49	2.6	250	PVC	SDR 35	1.00	60.6	**17.30%**	1.22
G2A	SAN 2	EX SAN MH						0.329	982	3.24	10.33	0.000	0.116	0.00	0.00	0.00	0.00	0.00	0.00	0.341	0.341	0.06	0.341	0.670	0.22	10.60	11.7	250	PVC	SDR 35	1.00	60.6	**17.49%**	1.22
							1408				**15.03**	**0.218**														**15.41**								

Notes
1. Unit breakdown provided by Neuf Architect(e)s in June 21, 2024
2. Site to outlet to existing 250 mm dia. sanitary sewer on Sandcastle Drive.
3. Entire site area considered as potential source of infiltration.
4. Bachelor unit has 1.4 ppu

D.2 Sanitary Sewer Capacity Confirmation

Wu, Michael

From: Rasool, Rubina <Rubina.Rasool@ottawa.ca>
Sent: June 17, 2024 08:52
To: Wu, Michael
Cc: Kilborn, Kris
Subject: RE: City File No. D07-12-23-0073 (2948 Baseline Road) Request for Sanitary Sewer Capacity Confirmation
Attachments: 2948 Baseline Road REVISED June 2024.pdf

Hello Michael,

There are no concerns for the proposed 17L/s sanitary release rate on either Baseline Road or Sandcastle Drive.

The following are boundary conditions, HGL, for hydraulic analysis at 2948 Baseline Road (zone 2W2C) with assumed to be connected to the 203 mm watermain on Sandcastle Drive and the 203 mm private connection to the 1220 mm on Baseline Road (see attached PDF for location).

All Connections:
Minimum HGL: 126.7 m
Maximum HGL: 133.0 m
Max Day + Fire Flow (166.7 L/s): 120.6 m (Connection 1), 122.7 m (Connection 2), 129.5 m (Connection 3)

These are for current conditions and are based on computer model simulation.
Disclaimer: The boundary condition information is based on current operation of the city water distribution system. The computer model simulation is based on the best information available at the time. The operation of the water distribution system can change on a regular basis, resulting in a variation in boundary conditions. The physical properties of watermains deteriorate over time, as such must be assumed in the absence of actual field test data. The variation in physical watermain properties can therefore alter the results of the computer model simulation.

Rubina

Rubina Rasool
Project Manager
Planning, Infrastructure and Economic Development Department
Development Review – West Branch
City of Ottawa
110 Laurier Avenue West Ottawa, ON K1P 1J1
613-580-2424 Ext. 24221
rubina.rasool@ottawa.ca

From: Wu, Michael <Michael.Wu@stantec.com>
Sent: June 06, 2024 9:16 AM
To: Rasool, Rubina <Rubina.Rasool@ottawa.ca>
Cc: Kilborn, Kris <kris.kilborn@stantec.com>
Subject: City File No. D07-12-23-0073 (2948 Baseline Road) Request for Sanitary Sewer Capacity Confirmation

CAUTION: This email originated from an External Sender. Please do not click links or open attachments unless you recognize the source.

ATTENTION : Ce courriel provient d'un expéditeur externe. Ne cliquez sur aucun lien et n'ouvrez pas de pièce jointe, excepté si vous connaissez l'expéditeur.

Good morning, Rubina:

We are looking to confirm whether the downstream sanitary sewers in Sandcastle Drive have the capacity to receive an additional 17 L/s of peak sanitary flow from the proposed 2948 Baseline Road development.

Attached is the design sheet for your reference.

Please let us know if you have any questions or require additional information.

Thanks,

Michael Wu EIT
Civil Engineering Intern, Community Development

Direct: 1 (613) 738-6033
Michael.Wu@stantec.com

Stantec
300-1331 Clyde Avenue
Ottawa ON K2C 3G4

The content of this email is the confidential property of Stantec and should not be copied, modified, retransmitted, or used for any purpose except with Stantec's written authorization. If you are not the intended recipient, please delete all copies and notify us immediately.

'

This e-mail originates from the City of Ottawa e-mail system. Any distribution, use or copying of this e-mail or the information it contains by other than the intended recipient(s) is unauthorized. Thank you.

Le présent courriel a été expédié par le système de courriels de la Ville d'Ottawa. Toute distribution, utilisation ou reproduction du courriel ou des renseignements qui s'y trouvent par une personne autre que son destinataire prévu est interdite. Je vous remercie de votre collaboration.

'

Caution: This email originated from outside of Stantec. Please take extra precaution.

Attention: Ce courriel provient de l'extérieur de Stantec. Veuillez prendre des précautions supplémentaires.

Atención: Este correo electrónico proviene de fuera de Stantec. Por favor, tome precauciones adicionales.

Appendix E Stormwater Servicing

E.1 Novatech 2015 SWM Plan and Analysis

ROOF DRAIN TABLE

ROOF DRAIN No.	1:5 YEAR RELEASE RATE	APPROX. 5 YR PONDING DEPTH	1:100 YEAR RELEASE RATE	APPROX. 100 YR PONDING DEPTH
PHASE 1	UNCONTROLLED	N/A	UNCONTROLLED	N/A
PHASE 2	UNCONTROLLED	N/A	UNCONTROLLED	N/A
PHASE 3	UNCONTROLLED	N/A	UNCONTROLLED	N/A

AREA PL 1 - INLET CONTROL DEVICE DATA - MH 101

DESIGN EVENT	ORIFICE DIAMTER (mm)	DIAMETER OF OUTLET PIPE (mm)	DESIGN FLOW (L/s)	UPSTREAM HEAD (m)	REQUIRED VOLUME (m^3)	VOLUME PROVIDED (m^3)
1:5 YR	171	375	76.2	1.55	139	327
1:100 YR	171	375	97.3	2.55	325	327

AREA PL 2 - INLET CONTROL DEVICE DATA - CBMH 112

DESIGN EVENT	ORIFICE DIAMTER (mm)	DIAMETER OF OUTLET PIPE (mm)	DESIGN FLOW (L/s)	UPSTREAM HEAD (m)	REQUIRED VOLUME (m^3)	VOLUME PROVIDED (m^3)
1:5 YR	158	450	74.2	2.05	62	117
1:100 YR	158	450	80.0	2.35	165	184

AREA PH 4 - INLET CONTROL DEVICE DATA - STMMH 122

DESIGN EVENT	ORIFICE DIAMTER (mm)	DIAMETER OF OUTLET PIPE (mm)	DESIGN FLOW (L/s)	UPSTREAM HEAD (m)	REQUIRED VOLUME (m^3)	VOLUME PROVIDED (m^3)
1:5 YR	73	300	19.4	3.11	15	74
1:100 YR	73	300	20.0	3.21	44	74

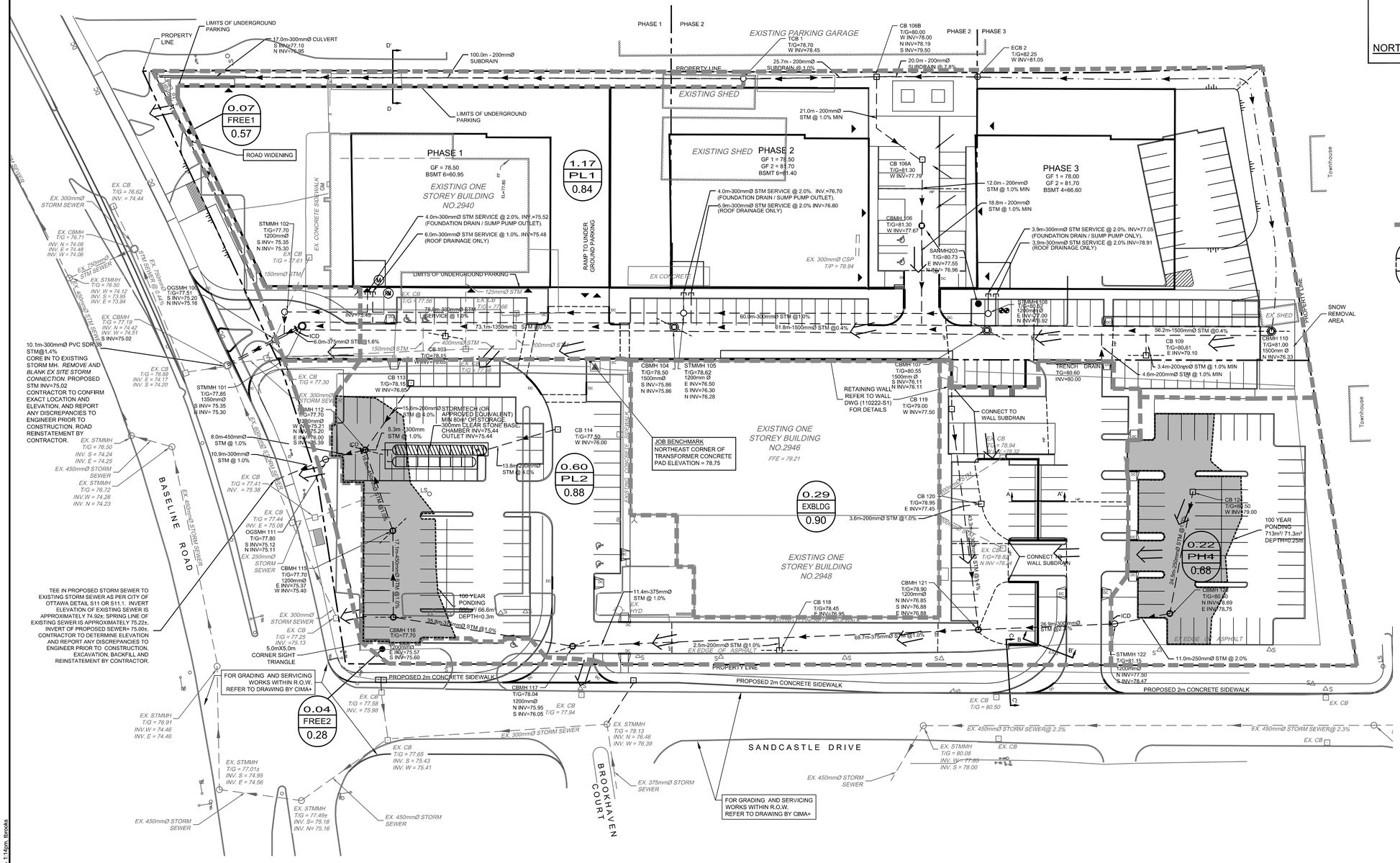

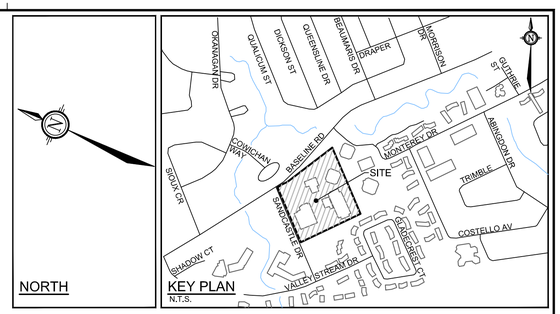

LEGEND

- PROPOSED CURB
- PROPOSED DEPRESSED CURB
- PROPOSED CATCHBASIN
- PROPOSED SWALE
- PROPOSED BUILDING ENTRANCE
- DIRECTION OF MAJOR OVERLAND FLOW
- MAXIMUM SURFACE PONDING
- DRAINAGE AREA
- EXISTING STORM MANHOLE
- EXISTING SANITARY MANHOLE
- EXISTING CATCHBASIN
- EXISTING DITCH INLET CATCH BASIN
- EXISTING TOP OF GRATE
- EXISTING VALVE & VALVE BOX
- EXISTING HYDRANT C/W VALVE
- EXISTING UTILITY POLE C/W GUY WIRES
- EXISTING LIGHT STANDARD
- EXISTING FENCE
- EXISTING OVERHEAD WIRES

0.085 / R1B / 0.2 — DRAINAGE AREA (hectares); AREA I.D.; RUN-OFF COEFFICIENT

NOTE:
THE POSITION OF ALL POLE LINES, CONDUITS, WATERMAINS, SEWERS AND OTHER UNDERGROUND AND OVERGROUND UTILITIES AND STRUCTURES IS NOT NECESSARILY SHOWN ON THE CONTRACT DRAWINGS, AND WHERE SHOWN, THE ACCURACY OF THE POSITION OF SUCH UTILITIES AND STRUCTURES IS NOT GUARANTEED. BEFORE STARTING WORK, DETERMINE THE EXACT LOCATION OF ALL SUCH UTILITIES AND STRUCTURES AND ASSUME ALL LIABILITY FOR DAMAGE TO THEM.

NOT FOR CONSTRUCTION

No.	REVISION	DATE	BY
5.	REVISED PER CITY COMMENTS	DEC 18/15	ARM
4.	REVISED PER CITY COMMENTS	OCT 19/15	ARM
3.	REVISED PER CITY COMMENTS	JULY 21/15	ARM
2.	REVISED PER CITY COMMENTS	MAY 7/15	ARM
1.	ISSUED FOR SITE PLAN APPLICATION	DEC 19/14	MS

SCALE 1:400

DESIGN ARM
CHECKED MS
DRAWN IA
CHECKED MS
APPROVED MSP

FOR REVIEW ONLY

LICENSED PROFESSIONAL ENGINEER M. SAVIC 100102651 DEC 18/15 PROVINCE OF ONTARIO

NOVATECH
Engineers, Planners & Landscape Architects
Suite 200, 240 Michael Cowpland Drive
Ottawa, Ontario, Canada K2M 1P6
Telephone (613) 254-9643
Facsimile (613) 254-5867
Website www.novatech-eng.com

LOCATION
CITY OF OTTAWA
2940/2946/2948 BASELINE ROAD

DRAWING NAME
STORMWATER MANAGEMENT PLAN

PROJECT No. 110222-00
REV REV # 5
DRAWING No. 110222-SWM

PLANA4v06.DWG - 914.dmmv06.dmm

M:\2011\011022\CAD\Design\110222-SWM.dwg, SWM, Dec 18, 2015 - 1:14pm, tbrooks

PROJECT #: 110222

PROJECT NAME: 2940, 2946, 2948 BASELINE RD.
LOCATION: 2940, 2946, 2948 BASELINE RD.
DATE PREPARED: December 2014
DATE REVISED: May 2015
DATE REVISED: July 2015
DATE REVISED: Oct 2015
DATE REVISED: Dec 2015

NOVATECH
Engineers, Planners & Landscape Architects

TABLE D4: Controlled Flow - Parking Lot - 2940 Baseline(PL1)

Post Development Runoff Coefficient "C"

			5 Year Event		100 Year Event	
Area	Surface	Ha	"C"	C_{avg}	"C" + 25%	$^*C_{avg}$
Total	Hard	0.375	0.90	0.84	1.00	0.93
1.169	Roof	0.681	0.90		1.00	
	Soft	0.113	0.20		0.25	

Runoff Coefficient Equation
$C = (A_{hard} \times 0.9 + A_{soft} \times 0.2)/A_{Tot}$
$^*C = (A_{hard} \times 1.0 + A_{soft} \times 0.25)/A_{Tot}$
* Runoff Coefficient increases by 25% up to a maximum value of 1.00 for the 100-Year event

QUANTITY STORAGE REQUIREMENT - 5 YEAR

1.169 =Area (ha)
0.84 = C

Return Period	Time (min)	Intensity (mm/hr)	Flow Q (L/s)	Allowable Runoff (L/s)	Net Flow to be Stored (L/s)	Storage Req'd (m^3)
5 YEAR	10	104.19	284.43	76.2	208.23	124.94
	15	83.56	228.10	76.2	151.90	136.71
	20	**70.25**	**191.77**	**76.2**	**115.57**	**138.69**
	25	60.90	166.24	76.2	90.04	135.06
	30	53.93	147.21	76.2	71.01	127.83

QUANTITY STORAGE REQUIREMENT - 100 YEAR

1.169 =Area (ha)
0.93 = C

Return Period	Time (min)	Intensity (mm/hr)	Flow Q (L/s)	Allowable Runoff (L/s)	Net Flow to be Stored (L/s)	Storage Req'd (m^3)
100 YEAR	15	142.89	431.87	97.3	334.57	301.12
	20	119.95	362.53	97.3	265.23	318.28
	25	**103.85**	**313.86**	**97.3**	**216.56**	**324.84**
	30	91.87	277.66	97.3	180.36	324.64
	35	82.58	249.58	97.3	152.28	319.79

Equations:
Flow Equation
Q = 2.78 x C x I x A
Where:
C is the runoff coefficient
I is the rainfall intensity, City of Ottawa IDF
A is the total drainage area

ORIFICE SIZING

Control Device				
Circular Plug Type ICD		171 mm		
Design Event	**Flow**	**Head**	**Orifice Area (m^2)**	**Circ (mm)**
1:5 Year	76.2	1.55	0.023031	171.0
1:100 Year	97.3	2.55	0.022927	171.0

Orifice Control Sizing
Q = 0.6 x A x (2gh) x 0.5
Where:
Q is the release rate in m^3/s
A is the orifice area in m^2

g is the acceleration due to gravity, 9.81 m/s^2
h is the head of water above the orifice centre in m
d is the diameter of the orifice in m

PROJECT #: 110222

PROJECT NAME: 2940, 2946, 2948 BASELINE RD.
LOCATION: 2940, 2946, 2948 BASELINE RD.
DATE PREPARED: December 2014
DATE REVISED: May 2015
DATE REVISED: July 2015
DATE REVISED: Oct 2015

NOVATECH
Engineers, Planners & Landscape Architects

TABLE D5: Storage Provided - PL1

Max Water Elevation = 77.85

Description		Pipe Diameter (mm)	Length (m)	Depth (m)	Volume (cu.m)	Cumulative Volume (cu.m)
Pipe Storage						
		200	51.8	N/A	1.63	1.63
		1350	73.1	N/A	104.63	106.26
		1500	118	N/A	208.52	314.79
Catchbasin Storage	CB103	N/A	N/A	1.20	0.43	106.69
	CB106A	N/A	N/A	0.00	0.00	0.00
	CB106B	N/A	N/A	0.00	0.00	106.26
	CB109	N/A	N/A	0.00	0.00	314.79
CBMH/MH Storage	STMMH101	1350	N/A	2.55	3.65	318.44
	CBMH104	1350	N/A	1.99	2.85	321.28
	CBMH106	200	N/A	0.18	0.01	321.29
	CBMH107	1500	N/A	1.74	3.07	324.36
	CBMH110	1500	N/A	1.52	2.69	327.04
Surface Ponding	5 Year	N/A	N/A	0.00	0.00	327.04
	100 Year	N/A	N/A	0.00	0.00	327.04

TOTAL STORAGE = 327.04

E.2 Storm Sewer Analysis

File No: **160401676**
Project: **Baseline Road**
Date: **July 2024**

SWM Approach:
Post-development to Pre-development flows

Post-Development Site Conditions:

Overall Runoff Coefficient for Site and Sub-Catchment Areas

Runoff Coefficient Table

Catchment Type	Sub-catchment Area ID / Description		Area (ha) "A"		Runoff Coefficient "C"	"A x C"		5-Year Runoff Coefficient	Runoff Coefficient "C"	"A x C"		100-Year Runoff Coefficient
Phase 1 and 2	PL1	Hard	0.758		0.9	0.682			1.0	0.758		
		Soft	0.012		0.2	0.002			0.25	0.003		
		Subtotal		0.770			0.685	0.89			0.761	0.99
Offsite (Non-Tributary)	FREE1	Hard	0.037		0.9	0.033			1.0	0.037		
		Soft	0.033		0.2	0.007			0.25	0.008		
		Subtotal		0.070			0.040	0.57			0.045	0.65
Controlled - Outlet 100	CIST1-1 to CIST1-12	Hard	0.3175		0.9	0.286			1.0	0.318		
	STM 100	Soft	0.4795		0.2	0.096			0.25	0.120		
		Subtotal		0.797			0.382	0.48			0.437	0.55
External	EXT	Hard	0.000		0.9	0.000			1.0	0.000		
		Soft	0.040		0.2	0.008			0.25	0.010		
		Subtotal		0.040			0.008	0.20			0.010	0.25
		Hard	0.000		0.9	0.000			1.0	0.000		
		Soft	0.000		0.2	0.000			0.25	0.000		
		Subtotal		0.000			0.000	0.00			0.000	0.00
		Hard	0.000		0.9	0.000			1.0	0.000		
		Soft	0.000		0.2	0.000			0.25	0.000		
		Subtotal		0.000			0.000	0.00			0.000	0.00
Controlled - Outlet 200	CIST2-1 to CIST2-11	Hard	0.4822		0.9	0.434			1.0	0.482		
	STM 200	Soft	0.0488		0.2	0.010			0.25	0.012		
		Subtotal		0.531			0.444	0.84			0.494	0.93
Offsite-1 (Non-Tributary)	OFFSITE-1	Hard	0.029		0.9	0.026			1.0	0.029		
		Soft	0.009		0.2	0.002			0.25	0.002		
		Subtotal		0.038			0.028	0.73			0.031	0.82
Offsite-2 (Non-Tributary)	OFFSITE-2	Hard	0.065		0.9	0.059			1.0	0.065		
		Soft	0.022		0.2	0.004			0.25	0.006		
		Subtotal		0.087			0.063	0.72			0.071	0.81
Park (Non-Tributary)	PARK	Hard	0.044		0.9	0.040			1.0	0.044		
		Soft	0.058		0.2	0.012			0.25	0.015		
		Subtotal		0.102			0.051	0.50			0.059	0.57
Total				**2.435**			**1.700**				**1.908**	
Overall Runoff Coefficient= C:								**0.70**				**0.78**

Total Phase 1 and 2 Areas	**0.77 ha**
Total Outlet 100 Areas	**0.84 ha**
Total Outlet 200 Areas	**0.53 ha**
Total Tributary Area to Outlet	**2.14 ha**
Total Phase 1 and 2 Uncontrolled Areas	**0.07 ha**
Total Outlet 100 Uncontrolled Areas	**0.00 ha**
Total Outlet 200 Uncontrolled Areas	**0.13 ha**
Total Other Uncontrolled Areas (Park)	**0.10 ha**
Total Uncontrolled Areas (Non-Tributary)	**0.30 ha**
Total Site	**2.44 ha**

Stormwater Management Calculations

Project #160401676, Baseline Road
Modified Rational Method Calculations for Storage

5 yr Intensity $I = a/(t + b)^c$
City of Ottawa

a =	998.071
b =	6.053
c =	0.814

t (min)	I (mm/hr)
10	104.19
15	83.56
20	70.25
25	60.90
30	53.93
35	48.52
40	44.18
45	40.63
50	37.65
55	35.12
60	32.94
65	31.04

5 -Year Allowable Flow Calculation for Full Site Area + External Area

Subdrainage Area: Total
Area (ha): 2.435
C: 0.50

Historical 20 minute Time of Concentration for existing site plan applied

tc (min)	I (5 yr) (mm/hr)	Qtarget (L/s)
20	70.25	**237.8**

5 -Year Target Flow Allocation

Time of Concentration (min): 10
Intensity (mm/hr): 104.19

	Controlled	Area (ha)	C	Flow (L/s) Calculated	Applied	
Phase 1-2 (EX 100)						
PL1	Y	0.770	0.89	198.3	75.6	
FREE1	Y	0.070	0.57	11.6	11.6	
Phase 3-4 (STM 100)						
STM 100	Y	0.797	0.48	110.5	21.3	
EXT	Y	0.040	0.20	2.3	0.0	Incl. in STM 100
Phase 5-6 (STM 200)						
STM 200	Y	0.531	0.84	128.5	17.2	
OFFSITE-1	N	0.038	0.73	8.1	8.1	
OFFSITE-2	N	0.087	0.72	18.2	18.2	
Public Park						
PARK	N	0.102	0.50	14.8	14.8	
			Total	154.8	**43.5**	

Project #160401676, Baseline Road
Modified Rational Method Calculations for Storage

100 yr Intensity $I = a/(t + b)^c$
City of Ottawa

a =	1735.688
b =	6.014
c =	0.820

t (min)	I (mm/hr)
10	178.56
15	142.89
20	119.95
25	103.85
30	91.87
35	82.58
40	75.15
45	69.05
50	63.95
55	59.62
60	55.89
65	52.65

100-Year Flow Calculation for Full Site Area + External Area

Subdrainage Area: Total
Area (ha): 2.435
C: 0.50

Historical 20 minute Time of Concentration for existing site plan applied

tc (min)	I (100 yr) (mm/hr)	Q100yr (L/s)
20	119.95	**406.0**

100-Year Target Flow Allocation

Time of Concentration (min): 10
Intensity (mm/hr): 178.56

	Control	Area (ha)	C	Flow (L/s) Calculated	Applied	
Phase 1-2 (EX 100)						
PL1	Y	0.770	0.99	377.8	97.3	
FREE1	Y	0.070	0.65	22.5	22.5	
Phase 3-4 (STM 100)						
STM 100	Y	0.797	0.55	217.1	21.3	
EXT	Y	0.040	0.25	5.0	0.0	Incl. in STM 100
Phase 5-6 (STM 200)						
STM 200	Y	0.531	0.93	245.4	17.2	
OFFSITE-1	N	0.038	0.82	15.5	15.5	
OFFSITE-2	N	0.087	0.81	35.0	35.0	
PARK	N	0.102	0.57	29.0	29.0	
			Total	295.9	**67.7**	

Stormwater Management Calculations

Project #160401676, Baseline Road
Modified Rational Method Calculations for Storage

5 -Year Allowable Flow Calculation for Phase 1-2 (EX 100)

Subdrainage Area: Tributary Area to Outlet
Area (ha): 0.840
C: 0.50

Assumed approximate current Time of Concentration

tc (min)	I (5 yr) (mm/hr)	Qtarget (L/s)
20	70.25	**82.0**

5-Year Modified Rational Method for Phase 1-2 (EX 100)

Subdrainage Area: FREE1 0 0 0.00
Area (ha): 0.00 0.00 0.00 At Outlet EX 100
C: 0.00 0.00 0.00

tc (min)	I (5 yr) (mm/hr)	Q1actual (L/s)	(L/s)	(L/s)	QUactual (L/s)
10	104.19	0.0	0.0	0.0	0.0
15	83.56	0.0	0.0	0.0	0.0
20	70.25	0.0	0.0	0.0	0.0
25	60.90	0.0	0.0	0.0	0.0
30	53.93	0.0	0.0	0.0	0.0
35	48.52	0.0	0.0	0.0	0.0
40	44.18	0.0	0.0	0.0	0.0
45	40.63	0.0	0.0	0.0	0.0
50	37.65	0.0	0.0	0.0	0.0
55	35.12	0.0	0.0	0.0	0.0
60	32.94	0.0	0.0	0.0	0.0
65	31.04	0.0	0.0	0.0	0.0

Subdrainage Area: PL1 Controlled - EX 100
Area (ha): 0.770
C: 0.89
Discharge (L/s): 75.6 From May 2015 Novatech SWM Report

tc (min)	I (5 yr) (mm/hr)	Qactual (L/s)	Qrelease (L/s)	Qstored (L/s)	Vstored (m^3)
10	104.19	198.3	75.6	122.7	73.6
15	83.56	159.0	75.6	83.4	**75.1**
20	70.25	133.7	75.6	58.1	69.7
25	60.90	115.9	75.6	40.3	60.4
30	53.93	102.6	75.6	27.0	48.7
35	48.52	92.3	75.6	16.7	35.1
40	44.18	84.1	75.6	8.5	20.4
45	40.63	77.3	75.6	1.7	4.7
50	37.65	71.7	71.7	0.0	0.0
55	35.12	66.8	66.8	0.0	0.0
60	32.94	62.7	62.7	0.0	0.0
65	31.04	59.1	59.1	0.0	0.0

Storage Volume Required (m^3) 76

Project #160401676, Baseline Road
Modified Rational Method Calculations for Storage

100-Year Allowable Flow Calculation for Phase 1-2 (EX 100)

Subdrainage Area: Tributary Area to Outlet
Area (ha): 0.840
C: 0.50

Assumed approximate current Time of Concentration

tc (min)	I (100 yr) (mm/hr)	Q100yr (L/s)
20	119.95	**140.1**

100-Year Modified Rational Method for Phase 1-2 (EX 100)

Subdrainage Area: FREE1 0.00 0.00 0.00
Area (ha): 0.00 0.00 0.00 At Outlet EX 100
C: 0.00 0.00 0.00

tc (min)	I (100 yr) (mm/hr)	Q1actual (L/s)	(L/s)	(L/s)	QUactual (L/s)
10	178.56	0.0	0.0	0.0	0.0
15	142.89	0.0	0.0	0.0	0.0
20	119.95	0.0	0.0	0.0	0.0
25	103.85	0.0	0.0	0.0	0.0
30	91.87	0.0	0.0	0.0	0.0
35	82.58	0.0	0.0	0.0	0.0
40	75.15	0.0	0.0	0.0	0.0
45	69.05	0.0	0.0	0.0	0.0
50	63.95	0.0	0.0	0.0	0.0
55	59.62	0.0	0.0	0.0	0.0
60	55.89	0.0	0.0	0.0	0.0
65	52.65	0.0	0.0	0.0	0.0

Subdrainage Area: PL1 Controlled - EX 100
Area (ha): 0.770
C: 0.99
Discharge (L/s): 97.3 From May 2015 Novatech SWM Report

tc (min)	I (100 yr) (mm/hr)	Qactual (L/s)	Qrelease (L/s)	Qstored (L/s)	Vstored (m^3)
10	178.56	377.8	97.3	280.5	168.3
15	142.89	302.3	97.3	205.0	184.5
20	119.95	253.8	97.3	156.5	**187.8**
25	103.85	219.7	97.3	122.4	183.6
30	91.87	194.4	97.3	97.1	174.7
35	82.58	174.7	97.3	77.4	162.5
40	75.15	159.0	97.3	61.7	148.0
45	69.05	146.1	97.3	48.8	131.7
50	63.95	135.3	97.3	38.0	114.0
55	59.62	126.1	97.3	28.8	95.2
60	55.89	118.2	97.3	20.9	75.4
65	52.65	111.4	97.3	14.1	54.9

Storage Volume Required (m^3) 188

Stormwater Management Calculations

Project #160401676, Baseline Road
Modified Rational Method Calculations for Storage

5 -Year Allowable Flow Calculation for Phase 3-4 (STM 100)

Subdrainage Area: Tributary Area to Outlet
Area (ha): 0.837
C: 0.50

Assumed approximate current Time of Concentration

tc (min)	I (5 yr) (mm/hr)	Qtarget (L/s)
20	70.25	**81.7**

5-Year Modified Rational Method for Phase 3-4 (STM 100)

Subdrainage Area:	PARK	0	0	Park (Non-Tributary)
Area (ha):	0.10	0.00	0.00	At Outlet 100
C:	0.50	0.00	0.00	

tc (min)	I (5 yr) (mm/hr)	Q1actual (L/s)	(L/s)	(L/s)	QUactual (L/s)
10	104.19	14.8	0.0	0.0	14.8
15	83.56	11.9	0.0	0.0	11.9
20	70.25	10.0	0.0	0.0	10.0
25	60.90	8.7	0.0	0.0	8.7
30	53.93	7.7	0.0	0.0	7.7
35	48.52	6.9	0.0	0.0	6.9
40	44.18	6.3	0.0	0.0	6.3
45	40.63	5.8	0.0	0.0	5.8
50	37.65	5.4	0.0	0.0	5.4
55	35.12	5.0	0.0	0.0	5.0
60	32.94	4.7	0.0	0.0	4.7
65	31.04	4.4	0.0	0.0	4.4

Subdrainage Area: STM 100 + EXT — Controlled - Outlet 100
Area (ha): 0.84
C: 0.87
Discharge (L/s): 21.3

tc (min)	I (5 yr) (mm/hr)	Qactual (L/s)	Qrelease (L/s)	Qstored (L/s)	Vstored (m^3)
10	104.19	209.9	21.3	188.6	113.1
20	70.25	141.5	21.3	120.2	144.2
30	53.93	108.6	21.3	87.3	157.2
40	44.18	89.0	21.3	67.7	162.5
50	37.65	75.8	21.3	54.5	**163.6**
60	32.94	66.4	21.3	45.1	162.2
70	29.37	59.2	21.3	37.9	159.0
80	26.56	53.5	21.3	32.2	154.6
90	24.29	48.9	21.3	27.6	149.1
100	22.41	45.1	21.3	23.8	143.0
110	20.82	41.9	21.3	20.6	136.2
120	19.47	39.2	21.3	17.9	129.0

Storage Volume Required (m^3) **164**

Project #160401676, Baseline Road
Modified Rational Method Calculations for Storage

100-Year Allowable Flow Calculation for Phase 3-4 (STM 100)

Subdrainage Area: Tributary Area to Outlet
Area (ha): 0.837
C: 0.50

Assumed approximate current Time of Concentration

tc (min)	I (100 yr) (mm/hr)	Q100yr (L/s)
20	119.95	**139.6**

100-Year Modified Rational Method for Phase 3-4 (STM 100)

Subdrainage Area:	PARK	0.00	0.00	Park (Non-Tributary)
Area (ha):	0.10	0.00	0.00	At Outlet 100
C:	0.57	0.00	0.00	

tc (min)	I (100 yr) (mm/hr)	Q1actual (L/s)	(L/s)	(L/s)	QUactual (L/s)
10	178.56	29.0	0.0	0.0	29.0
15	142.89	23.2	0.0	0.0	23.2
20	119.95	19.5	0.0	0.0	19.5
25	103.85	16.9	0.0	0.0	16.9
30	91.87	14.9	0.0	0.0	14.9
35	82.58	13.4	0.0	0.0	13.4
40	75.15	12.2	0.0	0.0	12.2
45	69.05	11.2	0.0	0.0	11.2
50	63.95	10.4	0.0	0.0	10.4
55	59.62	9.7	0.0	0.0	9.7
60	55.89	9.1	0.0	0.0	9.1
65	52.65	8.6	0.0	0.0	8.6

Subdrainage Area: STM 100 + EXT — Controlled - Outlet 100
Area (ha): 0.84
C: 0.53
Discharge (L/s): 21.3

tc (min)	I (100 yr) (mm/hr)	Qactual (L/s)	Qrelease (L/s)	Qstored (L/s)	Vstored (m^3)
10	178.56	222.1	21.3	200.8	120.5
20	119.95	149.2	21.3	127.9	153.5
30	91.87	114.3	21.3	93.0	167.3
40	75.15	93.5	21.3	72.2	173.2
50	63.95	79.5	21.3	58.2	**174.7**
60	55.89	69.5	21.3	48.2	173.6
70	49.79	61.9	21.3	40.6	170.6
80	44.99	56.0	21.3	34.7	166.3
90	41.11	51.1	21.3	29.8	161.1
100	37.90	47.1	21.3	25.8	155.0
110	35.20	43.8	21.3	22.5	148.4
120	32.89	40.9	21.3	19.6	141.2

Storage Volume Required (m^3) **175**

Stormwater Management Calculations

Project #160401676, Baseline Road
Modified Rational Method Calculations for Storage

5 -Year Allowable Flow Calculation for Phase 5-6 (STM 200)

Subdrainage Area: Tributary Area to Outlet
Area (ha): 0.656
C: 0.50

Assumed approximate equivalent Time of Concentration for existing storm sewer

tc (min)	I (5 yr) (mm/hr)	Qtarget (L/s)
20	70.25	**64.1**

5-Year Modified Rational Method for Phase 5-6 (STM 200)

Subdrainage Area:	OFFSITE-1	OFFSITE-2	0.00	Offsite (Non-Tributary)
Area (ha):	0.04	0.09	0.00	At Outlet 200
C:	0.73	0.72	0.00	

tc (min)	I (5 yr) (mm/hr)	Q2actual (L/s)	Q3actual (L/s)	(L/s)	QUactual (L/s)
10	104.19	8.1	18.2	0.0	26.3
15	83.56	6.5	14.6	0.0	21.1
20	70.25	5.4	12.3	0.0	17.7
25	60.90	4.7	10.6	0.0	15.4
30	53.93	4.2	9.4	0.0	13.6
35	48.52	3.8	8.5	0.0	12.2
40	44.18	3.4	7.7	0.0	11.2
45	40.63	3.2	7.1	0.0	10.3
50	37.65	2.9	6.6	0.0	9.5
55	35.12	2.7	6.1	0.0	8.9
60	32.94	2.6	5.8	0.0	8.3
65	31.04	2.4	5.4	0.0	7.8

Subdrainage Area: ˜2-1 to CIST2-11 — Controlled - Outlet 200
Area (ha): 0.53
C: 0.84
Discharge (L/s): 17.2 5yr Qtarget less 100yr Uncontrolled QUactual

tc (min)	I (5 yr) (mm/hr)	Qactual (L/s)	Qrelease (L/s)	Qstored (L/s)	Vstored (m^3)
10	104.19	128.5	17.2	111.3	66.8
20	70.25	86.7	17.2	69.5	83.4
30	53.93	66.5	17.2	49.3	88.8
40	44.18	54.5	17.2	37.3	**89.5**
50	37.65	46.4	17.2	29.2	87.7
60	32.94	40.6	17.2	23.4	84.4
70	29.37	36.2	17.2	19.0	79.9
80	26.56	32.8	17.2	15.6	74.7
90	24.29	30.0	17.2	12.8	68.9
100	22.41	27.6	17.2	10.4	62.6
110	20.82	25.7	17.2	8.5	56.0
120	19.47	24.0	17.2	6.8	49.1

Storage Volume Required (m^3) 90

Project #160401676, Baseline Road
Modified Rational Method Calculations for Storage

100 -Year Allowable Flow Calculation for Phase 5-6 (STM 200)

Subdrainage Area: Tributary Area to Outlet
Area (ha): 0.656
C: 0.50

Assumed approximate equivalent Time of Concentration for existing storm sewer

tc (min)	I (100 yr) (mm/hr)	Q100yr (L/s)
20	119.95	**109.4**

100-Year Modified Rational Method for Phase 5-6 (STM 200)

Subdrainage Area:	OFFSITE-1	OFFSITE-2	0.00	Offsite (Non-Tributary)
Area (ha):	0.04	0.09	0.00	At Outlet 200
C:	0.82	0.81	0.00	

tc (min)	I (100 yr) (mm/hr)	Q2actual (L/s)	Q3actual (L/s)	(L/s)	QUactual (L/s)
10	178.56	15.5	35.0	0.0	50.5
15	142.89	12.4	28.0	0.0	40.4
20	119.95	10.4	23.5	0.0	33.9
25	103.85	9.0	20.4	0.0	29.4
30	91.87	8.0	18.0	0.0	26.0
35	82.58	7.2	16.2	0.0	23.4
40	75.15	6.5	14.7	0.0	21.3
45	69.05	6.0	13.5	0.0	19.5
50	63.95	5.6	12.5	0.0	18.1
55	59.62	5.2	11.7	0.0	16.9
60	55.89	4.9	11.0	0.0	15.8
65	52.65	4.6	10.3	0.0	14.9

Subdrainage Area: ˜2-1 to CIST2-11 — Controlled - Outlet 200
Area (ha): 0.53
C: 0.93
Discharge (L/s): 17.2 5yr Qtarget less 100yr Uncontrolled QUactual

tc (min)	I (100 yr) (mm/hr)	Qactual (L/s)	Qrelease (L/s)	Qstored (L/s)	Vstored (m^3)
10	178.56	245.4	17.2	228.2	136.9
20	119.95	164.9	17.2	147.7	177.2
30	91.87	126.3	17.2	109.1	196.3
40	75.15	103.3	17.2	86.1	206.6
50	63.95	87.9	17.2	70.7	212.1
60	55.89	76.8	17.2	59.6	214.6
70	49.79	68.4	17.2	51.2	**215.2**
80	44.99	61.8	17.2	44.6	214.3
90	41.11	56.5	17.2	39.3	212.2
100	37.90	52.1	17.2	34.9	209.4
110	35.20	48.4	17.2	31.2	205.8
120	32.89	45.2	17.2	28.0	201.7

Storage Volume Required (m^3) 216

Stormwater Management Calculations

Project #160401676, Baseline Road
Modified Rational Method Calculations for Storage

SUMMARY TO OUTLET

Phase 1-2 (EX 100)			
Allowable Flow to Public Storm Sewer	82.0	L/s	
Uncontrolled Area	0.070	ha	
Total 5yr Flow Uncontrolled	0.0	L/s	Tc = 10 min
Total 100yr Flow Uncontrolled	0.0	L/s	Tc = 10 min
Controlled Area	0.770	ha	
Total 5yr Flow to Outlet EX 100	198.3	L/s	Tc = 10 min
Total 5yr Flow from Outlet EX 100	75.6	L/s	
Storage Volume Required	76	m^3	
Phase 3-4 (STM 100)			
Allowable Flow to Public Storm Sewer	81.7	L/s	
Uncontrolled Area	0.000	ha	
Total 5yr Flow Uncontrolled	14.8	L/s	Tc = 10 min
Total 100yr Flow Uncontrolled	29.0	L/s	Tc = 10 min
Controlled Area	0.837	ha	
Total 5yr Flow to Outlet 100	209.9	L/s	Tc = 10 min
Total 5yr Flow from Outlet 100	21.3	L/s	
Storage Volume Required	164	m^3	
Phase 5-6 (STM 200)			
Allowable Flow to Public Storm Sewer	64.1	L/s	
Uncontrolled Area	0.125	ha	
Total 5yr Flow Uncontrolled	26.3	L/s	Tc = 10 min
Total 100yr Flow Uncontrolled	50.5	L/s	Tc = 10 min
Controlled Area	0.531	ha	
Total 5yr Flow to Outlet 200	128.5	L/s	Tc = 10 min
Total 5yr Flow from Outlet 200	17.2	L/s	
Storage Volume Required	90	m^3	
Reference Areas			
Allowable Flow from Reference Areas	227.8	L/s	
5yr Design Flow to Storm Sewer	114.1	L/s	
5yr Uncontrolled Flow	41.1	L/s	
5yr Design Flow	155.2	L/s	

Project #160401676, Baseline Road
Modified Rational Method Calculations for Storage

SUMMARY TO OUTLET

Phase 1-2 (EX 100)			
Allowable Flow to Public Storm Sewer	82.0	L/s	
Uncontrolled Area	0.070	ha	
Total 5yr Flow Uncontrolled	N/A	L/s	Tc = 10 min
Total 100yr Flow Uncontrolled	0.0	L/s	Tc = 10 min
Controlled Area	0.770	ha	
Total 100yr Flow to Outlet EX 100	377.8	L/s	Tc = 10 min
Total 100yr Flow from Outlet EX 100	97.3	L/s	
Storage Volume Required	188	m^3	
Phase 3-4 (STM 100)			
Allowable Flow to Public Storm Sewer	81.7	L/s	
Uncontrolled Area	0.000	ha	
Total 5yr Flow Uncontrolled	N/A	L/s	
Total 100yr Flow Uncontrolled	29.0	L/s	Tc = 10 min
Controlled Area	0.837	ha	
Total 100yr Flow to Outlet 100	222.1	L/s	Tc = 10 min
Total 100yr Flow from Outlet 100	21.3	L/s	
Storage Volume Required	175	m^3	
Phase 5-6 (STM 200)			
Allowable Flow to Public Storm Sewer	64.1	L/s	
Uncontrolled Area	0.125	ha	
Total 5yr Flow Uncontrolled	N/A	L/s	
Total 100yr Flow Uncontrolled	50.5	L/s	Tc = 10 min
Controlled Area	0.531	ha	
Total 100yr Flow to Outlet 200	245.4	L/s	Tc = 10 min
Total 100yr Flow from Outlet 200	17.2	L/s	
Storage Volume Required	216	m^3	
Reference Areas			
Allowable Flow from Reference Areas	227.8	L/s	
100yr Design Flow to Storm Sewer	135.8	L/s	
100yr Uncontrolled Flow	79.5	L/s	
100yr Design Flow	215.3	L/s	

Baseline Road
Phase 1 and 2 Storage Capacity
Duplicate analysis set to match May 2015 work by Novatech

Storage Type	ID	Pipe Size (mm)	Area (m^2)	Length (m)	Depth (m)	Volume (m^3)	Cummulative Volume (m^3)
Pipe		200	0.03	51.8	N/A	1.6	2
		1350	1.43	73.1	N/A	104.6	106
		1500	1.77	51.3	N/A	90.7	197
CB	CB103	N/A	0.36	N/A	1.2	0.4	107
	CB106A	N/A		N/A	0	0.0	0
	CB106B	N/A		N/A	0	0.0	106
	CB109	N/A		N/A	0	0.0	197
CBMH / MH	STMMH101	1350	1.43	N/A	2.55	3.6	201
	CBMH104	1350	1.43	N/A	1.99	2.8	203
	CBMH106	200	0.06	N/A	0.18	0.0	203
	CBMH107	1500	1.77	N/A	1.74	3.1	206
	~~CBMH110~~						206
Surface Ponding	5-Year	N/A		N/A	0	0.0	206
	100-Year	N/A		N/A	0	0.0	206

Stantec

Baseline Road

DATE: 2024-07-08
REVISION: 2
DESIGNED BY: RB
CHECKED BY:

STORM SEWER DESIGN SHEET
(City of Ottawa)

FILE NUMBER: 160401676

DESIGN PARAMETERS

$I = a / (t+b)^c$ (As per City of Ottawa Guidelines, 2012)

	1:2 yr	1:5 yr	1:10 yr	1:100 yr
a =	732.951	998.071	1174.184	1735.688
b =	6.199	6.053	6.014	6.014
c =	0.810	0.814	0.816	0.820

MANNING'S n = 0.013 BEDDING CLASS = B
MINIMUM COVER: 2.00 m
TIME OF ENTRY 10 min

LOCATION			DRAINAGE AREA																							PIPE SELECTION											
AREA ID NUMBER	FROM M.H.	TO M.H.	AREA (2-YEAR) (ha)	AREA (5-YEAR) (ha)	AREA (10-YEAR) (ha)	AREA (100-YEAR) (ha)	C (2-YEAR) (-)	C (5-YEAR) (-)	C (10-YEAR) (-)	C (100-YEAR) (-)	A x C (2-YEAR) (ha)	ACCUM AxC (2YR) (ha)	A x C (5-YEAR) (ha)	ACCUM. AxC (5YR) (ha)	A x C (10-YEAR) (ha)	ACCUM. AxC (10YR) (ha)	A x C (100-YEAR) (ha)	ACCUM. AxC (100YR) (ha)	T of C (min)	$I_{2\text{-YEAR}}$ (mm/h)	$I_{5\text{-YEAR}}$ (mm/h)	$I_{10\text{-YEAR}}$ (mm/h)	$I_{100\text{-YEAR}}$ (mm/h)	$Q_{CONTROL}$ (L/s)	ACCUM. $Q_{CONTROL}$ (L/s)	Q_{ACT} (CIA/360) (L/s)	LENGTH (m)	PIPE WIDTH OR DIAMETER (mm)	PIPE HEIGHT (mm)	PIPE SHAPE (-)	MATERIAL (-)	CLASS (-)	SLOPE %	Q_{CAP} (FULL) (L/s)	% FULL (-)	VEL. (FULL) (m/s)	VEL. (ACT) (m/s)	TIME OF FLOW (min)
Phase 3-4																																					
CIST1-1 to CIST 1-12, EXT1. EXT-2	100A	100	0.00	0.00	0.00	0.837	0.00	0.47	0.00	0.53	0.000	0.000	0.000	0.000	0.000	0.000	0.444	0.444	10.00	76.81	104.19	122.14	178.56	21.3	21.3	21.3	3.9	300	300	CIRCULAR	PVC	-	1.00	96.2	**22.15%**	1.37	0.92	0.07
	100	EX TIE	0.00	0.00	0.00	0.00	0.00	0.00	0.00	0.00	0.000	0.000	0.000	0.000	0.000	0.000	0.000	0.444	10.07	76.53	103.82	121.70	177.91	0.0	21.3	21.3	41.7	300	300	CIRCULAR	PVC	-	1.00	96.2	**22.15%**	1.37	0.92	0.76
																			10.83																		
Phase 5 and 6																																					
CIST2-1 to CIST2-11	200A	200	0.00	0.00	0.00	0.531	0.00	0.84	0.00	0.93	0.000	0.000	0.000	0.000	0.000	0.000	0.494	0.494	10.00	76.81	104.19	122.14	178.56	17.2	17.2	17.2	1.9	300	300	CIRCULAR	PVC	-	1.00	96.2	**17.89%**	1.37	0.86	0.04
	200	EX TIE	0.00	0.00	0.00	0.00	0.00	0.00	0.00	0.00	0.000	0.000	0.000	0.000	0.000	0.000	0.000	0.494	10.04	76.66	104.00	121.91	178.22	0.0	17.2	17.2	13.8	300	300	CIRCULAR	PVC	-	0.50	68.0	**25.30%**	0.97	0.67	0.34
																			10.38																		
PARK	PARK 1-A	PARK 1	0.00	0.00	0.00	0.102	0.00	0.50	0.00	0.57	0.000	0.000	0.000	0.000	0.000	0.000	0.058	0.058	10.00	76.81	104.19	122.14	178.56	0.0	0.0	28.8	3.5	200	200	CIRCULAR	PVC	-	3.27	60.2	**47.88%**	1.90	1.61	0.04
	PARK 1	EX TIE	0.00	0.00	0.00	0.00	0.00	0.00	0.00	0.00	0.000	0.000	0.000	0.000	0.000	0.000	0.000	0.058	10.04	76.67	104.00	121.92	178.23	0.0	0.0	28.8	12.7	200	200	CIRCULAR	PVC	-	1.00	33.3	**86.42%**	1.05	1.05	0.20
																			10.24																		

GENERAL NOTES AND SPECIFICATIONS

1. ALL MATERIALS AND CONSTRUCTION METHODS TO BE IN ACCORDANCE WITH ONTARIO PROVINCIAL STANDARD AND CITY OF OTTAWA STANDARD SPECIFICATIONS AND DRAWINGS AND ONTARIO PROVINCIAL STANDARD DRAWING SUPPLEMENT. ONTARIO PROVINCIAL STANDARDS WILL APPLY WHERE NO CITY STANDARDS ARE AVAILABLE.
2. THE CONTRACTOR IS RESPONSIBLE FOR OBTAINING ALL PERMITS REQUIRED AND BEAR COST OF SAME INCLUDING WATER PERMIT AND ASSOCIATED COSTS.
3. SERVICE AND UTILITY LOCATIONS ARE APPROXIMATE, CONTRACTOR TO VERIFY LOCATION AND ELEVATION OF EXISTING SERVICES AND UTILITIES PRIOR TO CONSTRUCTION. CONTRACTOR SHALL BE RESPONSIBLE FOR OBTAINING LOCATES FROM ALL UTILITY COMPANIES TO LOCATE EXISTING UTILITIES PRIOR TO EXCAVATION. THE CONTRACTOR IS RESPONSIBLE FOR PROTECTION AND REINSTATEMENT.
4. ALL DISTURBED AREAS SHALL BE REINSTATED TO EQUAL OR BETTER CONDITION TO THE SATISFACTION OF THE ENGINEER & THE CITY. PAVEMENT REINSTATEMENT FOR SERVICE AND UTILITY CUTS SHALL BE IN ACCORDANCE WITH OPSD 509.010 AND OPSS 310.
5. ALL WORK SHALL BE COMPLETED IN ACCORDANCE WITH THE "OCCUPATIONAL HEALTH AND SAFETY ACT AND REGULATION FOR CONSTRUCTION PROJECTS". THE GENERAL CONTRACTOR SHALL BE DEEMED TO BE THE CONSTRUCTOR AS DEFINED IN THE ACT.
6. THE CONTRACTOR SHALL SUBMIT AN EROSION AND SEDIMENTATION CONTROL PLAN THAT WILL IMPLEMENT BEST MANAGEMENT PRACTICES TO PROVIDE PROTECTION FOR RECEIVING STORM SEWERS OR DRAINAGE DURING CONSTRUCTION ACTIVITIES. THIS PLAN SHALL INCLUDE BUT NOT BE LIMITED TO CATCH BASINS INSERTS, STRAW BALE CHECK DAMS AND SEDIMENT CONTROLS AROUND ALL DISTURBED AREAS. DEWATERING SHALL BE PUMPED INTO SEDIMENT TRAPS.
7. SITE PLAN PREPARED BY NEUF ARCHITECTS. DATED 2023-04-21 WITH REVISION 2 DATED 2024-07-12, DRAWING TITLE: PROPOSED SITE PLAN. PROJECT NAME: BASELINE TOWER 3456. PROJECT No. 12762.00.
8. TOPOGRAPHIC SURVEY SUPPLIED BY ANNIS, O'SULLIVAN, VOLLEBEKK LTD. TOPOGRAPHIC PLAN OF SURVEY PART OF LOT 35, CONCESSION 3 (RIDEAU FRONT) AND PART OF THE ROAD ALLOWANCE BETWEEN CONCESSION 2 (OTTAWA FRONT) AND CONCESSION 3 (RIDEAU FRONT), (CLOSED BY BY-LAY 51-64, INST. CR521552 GEOGRAPHIC TOWNSHIP OF NEPEAN, CITY OF OTTAWA.
9. REFER TO LANDSCAPE ARCHITECTURE PLAN FOR ALL LANDSCAPE FEATURES (ie. TREES, WALKWAYS, PARK DETAILS, NOISE BARRIERS, FENCES, RETAINING WALLS, etc.)
10. GEOTECHNICAL INVESTIGATION PROPOSED MULTI-STOREY BUILDING - TOWER 4 TO 6, 2946 BASELINE ROAD, OTTAWA, ON. PREPARED BY PATERSON GROUP, DATED MAY 8, 2023. REPORT No PG6107-1. GEOTECHNICAL INFORMATION PRESENTED ON THESE DRAWINGS MAY BE INTERPOLATED FROM THE ORIGINAL REPORT. REFER TO ORIGINAL GEOTECHNICAL REPORT FOR ADDITIONAL DETAILS AND TO VERIFY ASSUMPTIONS MADE HEREIN.
11. ALL DIMENSIONS ARE IN METRES UNLESS OTHERWISE STATED. DIMENSIONS SHALL BE CHECKED AND VERIFIED IN THE FIELD BY THE CONTRACTOR PRIOR TO THE START OF CONSTRUCTION. ANY DISCREPANCIES TO BE REPORTED IMMEDIATELY TO ENGINEER.
12. THERE WILL BE NO SUBSTITUTION OF MATERIALS UNLESS PRIOR WRITTEN APPROVAL BY THE CONTRACT ADMINISTRATOR AND DIRECTOR OF ENGINEERING HAS BEEN OBTAINED.
13. HERITAGE OPERATIONS UNIT OF THE ONTARIO MINISTRY OF CULTURE TO BE NOTIFIED IF DEEPLY BURIED ARCHEOLOGICAL REMAINS ARE FOUND ON THE PROPERTY DURING CONSTRUCTION ACTIVITIES.

ROADWORKS

1. ALL TOPSOIL AND ORGANIC MATERIAL TO BE STRIPPED FROM WITHIN THE FULL RIGHT OF WAY PRIOR TO CONSTRUCTION.
2. SUB-EXCAVATE SOFT AREAS & FILL WITH GRANULAR 'B' COMPACTED IN 0.30m LAYERS.
3. ALL GRANULAR FOR ROADS SHALL BE COMPACTED TO A MINIMUM OF 98% STANDARD PROCTOR MAXIMUM DRY DENSITY (SPMDD).
4. ROAD SUBDRAINS SHALL BE CONSTRUCTED AS PER CITY OF OTTAWA STANDARD R1.
5. ASPHALT WEAR COURSE SHALL NOT BE PLACED UNTIL THE VIDEO INSPECTION OF SEWERS & NECESSARY REPAIRS HAVE BEEN CARRIED OUT TO THE SATISFACTION OF THE CONSULTANT.
6. CONTRACTOR TO OBTAIN A ROAD OCCUPANCY PERMIT 48 HOURS PRIOR TO COMMENCING ANY WORK WITHIN THE MUNICIPAL ROAD ALLOWANCE IF REQUIRED BY THE MUNICIPALITY. ALL WORK ON THE MUNICIPAL RIGHT OF WAY AND EASEMENTS TO BE INSPECTED BY THE MUNICIPALITY PRIOR TO BACKFILLING.
7. PAVEMENT REINSTATEMENT FOR SERVICE AND UTILITY CUTS SHALL BE IN ACCORDANCE WITH CITY OF OTTAWA STANDARD R10, AND OPSD 509.010, AND OPSS 310.
8. CONCRETE CURBS SHALL BE CONSTRUCTED AS PER CITY STANDARD SC1.1 AND SC1.3 (BARRIER OR MOUNTABLE CURB AS SHOWN ON DRAWINGS).
9. CONCRETE SIDEWALKS SHALL BE CONSTRUCTED AS PER CITY STANDARDS SC3 AND SC1.4.
10. PAVEMENT CONSTRUCTION AS PER GEOTECHNICAL INVESTIGATION PROPOSED MULTI-STOREY BUILDING - TOWER 4 TO 6, 2946 BASELINE ROAD, OTTAWA, ON. PREPARED BY PATERSON GROUP, DATED MAY 8, 2023. PROJECT No. PG6107-1

    PAVEMENT STRUCTURE - CAR ONLY PARKING AREAS
    50mm SUPERPAVE 12.5 ASPHALTIC CONCRETE
    150 OPSS GRANULAR 'A' BASE
    300 OPSS GRANULAR 'B' TYPE II

    PAVEMENT STRUCTURE - ACCESS LANES AND HEAVY TRUCK PARKING AREAS
    40mm SUPERPAVE 12.5 ASPHALTIC CONCRETE
    50mm SUPERPAVE 19.0 ASPHALTIC CONCRETE
    150 OPSS GRANULAR 'A' BASE
    450 OPSS GRANULAR 'B' TYPE II

WATER SUPPLY SERVICING

10. THE CONTRACTOR SHALL CONSTRUCT WATERMAIN, WATER SERVICES, CONNECTIONS & APPURTENANCES AS PER CITY OF OTTAWA SPECIFICATIONS & SHALL CO-ORDINATE AND PAY ALL RELATED COSTS INCLUDING THE COST OF CONNECTION, INSPECTION & DISINFECTION BY CITY PERSONNEL.
11. WATERMAIN PIPE MATERIAL SHALL BE PVC CL.150 DR18. DEFLECTION OF WATERMAIN PIPE IS NOT TO EXCEED 1/2 OF THAT SPECIFIED BY THE MANUFACTURER. PVC WATERMAINS TO BE INSTALLED WITH TRACER WIRE IN ACCORDANCE WITH CITY OF OTTAWA STANDARD W36.
12. WATER SERVICES ARE TO BE TYPE K SOFT COPPER AS PER CITY OF OTTAWA STANDARD W26 (UNLESS OTHERWISE NOTED).
13. FIRE HYDRANTS TO BE INSTALLED AS PER CITY OF OTTAWA STANDARDS W18 AND W19.
14. WATER VALVES TO BE INSTALLED AS PER CITY OF OTTAWA STANDARD W24.
15. WATERMAIN TRENCH SHALL BE IN ACCORDANCE WITH CITY OF OTTAWA STD. W17 UNLESS OTHERWISE SPECIFIED. BEDDING AND COVER MATERIAL AS PER SECTION 6.4 OF THE GEOTECH REPORT.
16. SERVICE CONNECTIONS SHALL BE INSTALLED A MINIMUM OF 2400mm FROM ANY CATCHBASIN, MANHOLE, OR OBJECT THAT MAY CONTRIBUTE TO FREEZING. THERMAL INSULATION SHALL BE INSTALLED ON ALL PROPOSED CB'S ON THE W/M STREET SIDE WHERE 2400mm SEPARATION CANNOT BE ACHIEVED (AS PER CITY OF OTTAWA W22 & W23).
17. CATHODIC PROTECTION TO BE SUPPLIED ON METALLIC FITTINGS AS PER CITY OF OTTAWA W40 AND W42.
18. THRUST BLOCKS TO BE INSTALLED AS PER CITY OF OTTAWA STANDARDS W25.3 AND W25.4.
19. WATERMAIN TO HAVE MIN. 2.4m COVER. WHERE WATERMAIN COVER IS LESS THAN 2.4m, INSULATION TO BE SUPPLIED IN ACCORDANCE WITH CITY STANDARD W22.
20. WATERMAIN CROSSINGS ABOVE AND BELOW SEWERS TO BE INSTALLED AS PER CITY OF OTTAWA STANDARD W25 AND W25.2.
21. PRESSURE REDUCING VALVES (PRV) IF REQUIRED, TO BE INSTALLED AS PER ONTARIO PLUMBING CODE.

STORM AND SANITARY SEWERS

1. SANITARY SEWERS 375mm DIA. OR SMALLER SHALL BE PVC DR35. SANITARY SEWERS LARGER THAN 375mm SHALL BE CONCRETE CSA A 257.2 CLASS 100-D AS PER OPSD 807.010.
2. STORM SEWERS 375mm DIA. OR SMALLER SHALL BE PVC DR35. STORM SEWERS LARGER THAN 375mm DIA. SHALL BE CONCRETE CSA A 257.2 CLASS 100-D AS PER OPSD 807.010
3. ALL STORM AND SANITARY SEWER BEDDING SHALL BE INSTALLED AS PER SECTION 6.4 OF THE GEOTECHNICAL REPORT.
4. STORM AND SANITARY MANHOLES SHALL BE 1200mm DIAMETER IN ACCORDANCE WITH OPSD-701.01 (UNLESS OTHERWISE NOTED) c/w FRAME AND COVER AS PER CITY OF OTTAWA S24, S24.1, AND S25 WHERE APPLICABLE. CATCH BASIN MANHOLE FRAME AND COVERS PER S25 AND S28.1. ALL STORM MANHOLES WITH SEWERS 900mm DIA SEWERS AND OVER IN SIZE SHALL BE BENCHED. ALL OTHER STORM MANHOLES SHALL BE COMPLETED WITH 300mm SUMPS AS PER CITY STANDARDS. SANITARY MANHOLES SHALL NOT HAVE SUMPS.
5. ALL SEWERS CONSTRUCTED WITH GRADES 0.50% OR LESS, TO BE INSTALLED WITH LASER AND CHECKED WITH LEVEL INSTRUMENT PRIOR TO BACKFILLING.
6. FOR STORM SEWER INSTALLATION (EXCLUDING CB LEADS) THE MINIMUM DEPTH OF COVER OVER THE CROWN OF THE SEWER IS 2.0m. FOR SANITARY SEWERS THE MINIMUM DEPTH OF COVER IS 2.5m OVER PIPE OBVERT.
7. ALL STORM AND SANITARY SERVICES TO BE EQUIPPED WITH APPROVED BACKWATER VALVES.
8. STORM AND SANITARY SERVICE LATERALS TO BE PVC SDR 28 INSTALLED AT MIN. 1.0% SLOPE.
9. CATCH BASINS SHALL BE INSTALLED IN ACCORDANCE WITH CITY STANDARDS S1, S2, S3 c/w FRAME AND GRATE AS PER S19. CURB INLET FRAME AND GRATE PER S22 AND S23. CATCH BASIN MANHOLES FRAME AND GRATE AS PER S25 FRAME AND S28.1 COVER. PROVIDE 150mm ADJUSTED SPACERS. ALL CATCH BASINS SHALL HAVE SUMPS (600mm DEEP). STREET CATCH BASIN LEADS SHALL BE 200mm DIA.(MIN) PVC DR 35 AT 1.0% GRADE WHERE NOT OTHERWISE SHOWN ON PLAN. CATCH BASINS WILL BE INSTALLED WITH INLET CONTROL DEVICES (ICD) AS PER ICD SCHEDULE ON STORM DRAINAGE PLAN.
10. CLAY SEALS TO BE INSTALLED AS PER CITY STANDARD DRAWING S8. THE SEALS SHOULD BE AT LEAST 1.5m LONG (IN THE TRENCH DIRECTION) AND SHOULD EXTEND FROM TRENCH WALL TO TRENCH WALL. GENERALLY, THE SEALS SHOULD EXTEND FROM THE FROST LINE AND FULLY PENETRATE THE BEDDING, SUBBEDDING AND COVER MATERIAL. THE BARRIERS SHOULD CONSIST OF RELATIVELY DRY AND COMPACTABLE BROWN SILTY CLAY PLACED IN MAXIMUM 225mm THICK LOOSE LAYERS COMPACTED TO A MINIMUM OF 95% OF THE MATERIAL'S SPMDD. THE CLAY SEALS SHOULD BE PLACED AT THE SITE BOUNDARIES AND AT STRATEGIC LOCATIONS AT NO MORE THAN 60m INTERVALS IN THE SERVICE TRENCHES. FOR DETAILS REFER TO GEOTECHNICAL INVESTIGATION .
11. GRANULAR "A" SHALL BE PLACED TO A MINIMUM THICKNESS OF 300 mm AROUND ALL STRUCTURES WITHIN PAVEMENT AREA AND COMPACTED TO A MINIMUM OF 98% STANDARD PROCTOR DENSITY.
12. CONTRACTOR SHALL PERFORM LEAKAGE TESTING, IN THE PRESENCE OF THE CONSULTANT, FOR SANITARY SEWERS IN ACCORDANCE WITH OPSS 410 AND OPSS 407. CONTRACTOR SHALL PERFORM VIDEO INSPECTION OF ALL STORM AND SANITARY SEWERS. A COPY OF THE VIDEO AND INSPECTION REPORT SHALL BE SUBMITTED TO THE CONSULTANT FOR REVIEW.
13. ANY SEWER ABANDONMENT TO BE CONDUCTED ACCORDING TO CITY OF OTTAWA STANDARD S11.4
14. SEWERS WITH LESS THAN 1.5m COVER TO BE INSULATED IN ACCORDANCE WITH CITY STANDARD W22.

GRADING

1. ALL GRANULAR BASE & SUB BASE COURSE MATERIALS SHALL BE COMPACTED TO 98% STANDARD PROCTOR MAX. DRY DENSITY.
2. SUB-EXCAVATE SOFT AREAS & FILL WITH GRANULAR 'B' COMPACTED IN 0.15m LAYERS.
3. ALL DISTURBED GRASSED AREAS SHALL BE RESTORED TO ORIGINAL CONDITION OR BETTER, WITH SOD ON MIN. 100mm TOPSOIL. THE RELOCATION OF TREES AND SHRUBS SHALL BE SUBJECT TO APPROVAL BY THE PROJECT LANDSCAPE ARCHITECT OR ENGINEER.
4. 100 YEAR PONDING DEPTH TO BE 0.30m (MAXIMUM).
5. EMBANKMENTS TO BE SLOPED AT MAX. 3:1, UNLESS OTHERWISE SPECIFIED.
6. ALL SWALES TO BE MIN. 0.15m DEEP WITH MAX. 3:1 SIDE SLOPES UNLESS OTHERWISE NOTED.
7. ALL RETAINING WALLS GREATER THAN 1.0m IN HEIGHT ARE TO BE DESIGNED, APPROVED, AND STAMPED BY A STRUCTURAL ENGINEER.
8. FENCES OR RAILINGS ARE REQUIRED FOR RETAINING WALLS GREATER THAN 0.60m IN HEIGHT.
9. EXCESS EXCAVATED MATERIAL SHALL BE REMOVED FROM THE SITE.
10. ALL NECESSARY CLEARING AND GRUBBING SHALL BE COMPLETED BY THE CONTRACTOR. REVIEW WITH CONTRACT ADMINISTRATOR AND THE CITY OF OTTAWA PRIOR TO TREE CUTTING.
11. REFER TO DRAWING EC DS-1 FOR EROSION AND SEDIMENT CONTROL DETAILS.

Best Management Practices

CONTRACTOR TO PROVIDE EROSION AND SEDIMENT CONTROLS (BEST MANAGEMENT PRACTICES) DURING CONSTRUCTION OF THIS PROJECT.

EROSION MUST BE MINIMIZED AND SEDIMENTS MUST BE REMOVED FROM CONSTRUCTION SITE RUN-OFF IN ORDER TO PROTECT DOWNSTREAM AREAS. DURING ALL CONSTRUCTION, EROSION AND SEDIMENTATION SHOULD BE CONTROLLED BY THE FOLLOWING TECHNIQUES:

1. LIMIT THE EXTENT OF EXPOSED SOILS AT ANY GIVEN TIME.
2. REVEGETATE EXPOSED AREAS AND SLOPES AS SOON AS POSSIBLE.
3. MINIMIZE AREA TO BE CLEARED AND GRUBBED.
4. PROTECT EXPOSED SLOPES WITH PLASTIC OR SYNTHETIC MULCHES.
5. INSTALL CATCH BASIN INSERTS OR EQUIVALENT IN ALL PROPOSED CATCH BASINS AND CATCH BASIN MANHOLES AND IN ALL EXISTING CATCH BASINS THAT WILL RECEIVE RUN-OFF FROM THE SITE.
6. A SILT FENCE SHALL BE INSTALLED AROUND THE PERIMETER OF ALL AND ANY STOCKPILES OF MATERIAL TO BE USED OR REMOVED FROM SITE. (LOCATION TO BE DETERMINED)
7. A VISUAL INSPECTION SHALL BE DONE DAILY ON SEDIMENT CONTROL MEASURES AND CLEANED OF ANY ACCUMULATED SILT AS REQUIRED. THE DEPOSITS WILL BE DISPOSED OFF SITE AS PER THE REQUIREMENTS OF THE CONTRACT.
8. SEDIMENT CONTROL BARRIERS MAY ONLY BE REMOVED TEMPORARILY WITH APPROVAL OF CONTRACT ADMINISTRATOR TO ACCOMMODATE CONSTRUCTION OPERATIONS. ALL AFFECTED BARRIERS MUST BE REINSTATED AT NIGHT WHEN CONSTRUCTION IS COMPLETED. NO REMOVAL WILL OCCUR IF THERE IS A SIGNIFICANT RAINFALL EVENT ANTICIPATED (>10mm) UNLESS A NEW DEVICE HAS BEEN INSTALLED TO PROTECT EXISTING STORM AND SANITARY SEWER SYSTEMS, OR DOWNSTREAM WATERCOURSES.
9. NO REFUELING OR CLEANING OF EQUIPMENT IS PERMITTED NEAR ANY EXISTING WATERWAY.
10. CONTRACTOR SHALL REMOVE SEDIMENT CONTROL MEASURES WHEN, IN THE OPINION OF THE CONTRACT ADMINISTRATOR, THE MEASURE(S) IS NO LONGER REQUIRED. NO CONTROL MEASURES SHALL BE PERMANENTLEY REMOVED WITHOUT PRIOR WRITTEN AUTHORIZATION FROM THE CONTRACT ADMINISTRATOR.
11. THE CONTRACTOR SHALL PERIODICALLY, OR WHEN REQUESTED BY THE CONTRACT ADMINISTRATOR, CLEAN OUT ACCUMULATED SEDIMENTS AS REQUIRED.
12. THE CONTRACTOR SHALL IMMEDIATELY REPORT TO THE ENGINEER ANY ACCIDENTAL DISCHARGES OF SEDIMENT MATERIAL INTO THE WATERCOURSE. APPROPRIATE RESPONSE MEASURES, INCLUDING ANY REPAIRS TO EXISTING CONTROL MEASURES OR THE IMPLEMENTATION OF ADDITIONAL CONTROL MEASURES, SHALL BE CARRIED OUT BY THE CONTRACTOR WITHOUT DELAY.
13. CONTRACTOR SHALL INSTALL MUD MAT AT CONSTRUCTION ENTRANCE TO THE SITE.

LEGEND

EXISTING CONDITIONS

ORIGINAL GROUND ELEVATION
EXISTING WATERMAIN
EXISTING VALVE AND VALVE BOX
EXISTING VALVE CHAMBER
EXISTING REDUCER
EXISTING FIRE HYDRANT
EXISTING SANITARY MH AND SEWER
EXISTING STORM MH AND SEWER
EXISTING CATCHBASIN MANHOLE
EXISTING CATCHBASIN
REMOVAL ITEMS
ASPHALT REMOVAL
EXISTING GASMAIN
EXISTING BELL LINE
EXISTING ROGERS
EXISTING OVERHEAD WIRES
EXISTING UNDERGROUND HYDRO

SERVICES

PROPOSED WATERMAIN
PROPOSED VALVE AND VALVE BOX
PROPOSED VALVE CHAMBER
PROPOSED REDUCER
PROPOSED FIRE HYDRANT
PROPOSED SANITARY SEWER AND MH
PROPOSED STORM SEWER AND MH
PROPOSED SINGLE CATCHBASIN
PROPOSED DOUBLE CATCHBASIN
PROPOSED CATCHBASIN ELBOW PER CITY STD S31
PROPOSED AREA DRAIN / TRENCH DRAIN TO BE CONNECTED TO INTERNAL BUILDING MECHANICAL SYSTEMS
EX/FUT. WATERMAIN
EXISTING/FUTURE VALVE AND VALVE BOX
EXISTING/FUTURE VALVE CHAMBER
EXISTING/FUTURE REDUCER
EXISTING/FUTURE FIRE HYDRANT
EXISTING/FUTURE SANITARY SEWER
EXISTING/FUTURE STORM SEWER
EXISTING/FUTURE CATCHBASIN MANHOLE
EXISTING/FUTURE CATCHBASIN
PROPOSED DEPRESSED CURB LOCATIONS (DC)
PROPOSED BARRIER CURB
THERMAL INSULATION ON STORM SEWER WHERE COVER IS LESS THAN 1.5m. THERMAL INSULATION ON WATERMAIN WHERE COVER IS LESS THAN 2.4m AS PER W22.
WATER METER (M)
REMOTE WATER METER (RM)
LANDSCAPE AREAS
ROAD CUT AS PER CITY OF OTTAWA STANDARD DETAIL R10
EXISTING STREET LIGHT CABLE
EXISTING BELL LINE
EXISTING ROGERS LINE
EXISTING GASMAIN

SANITARY DRAINAGE

R100A / 0.31 / 50:
SANITARY DRAINAGE AREA ID#
POPULATION COUNT
SANITARY DRAINAGE AREA ha.

G100A / 0.11 / INFL:
SANITARY DRAINAGE AREA ID#
INFILTRATION RATE OF 0.33 L/s/Ha APPLIED
SANITARY DRAINAGE AREA ha.

SANITARY DRAINAGE AREA
PROPOSED SANITARY MH AND SEWER
EXISTING SANITARY MH AND SEWER

EROSION CONTROL

PROPOSED SILT FENCE BOUNDARY AS PER OPSD 219.110
PROPOSED CATCH BASIN PROTECTION AS PER TERRAFIX SILTSACK DETAIL
PROPOSED MUD MAT LOCATION
PROPOSED VALVE BOX
PROPOSED VALVE CHAMBER
PROPOSED FIRE HYDRANT
PROPOSED SANITARY SEWER MANHOLE
PROPOSED STORM SEWER MANHOLE
PROPOSED SINGLE CATCHBASIN
PROPOSED DOUBLE CATCHBASIN

GRADING

ORIGINAL GROUND ELEVATION (99.99)
PROPOSED ELEVATION (99.99)
PROPOSED LOT CORNER ELEVATION (99.99)
EXISTING ELEVATION AT LOT CORNER (98.88)
FLOW DIRECTION AND GRADE (2.0%)
FINISHED FIRST FLOOR ELEVATION (FFE=100.00)
UNDERSIDE OF FOOTING ELEVATION (USF=97.00)
ENGINEERED FILL REQUIRED (E.F.)
TERRACING 3:1 SLOPE MAXIMUM (UNLESS OTHERWISE SHOWN)
DIRECTION OF OVERLAND FLOW
PROPOSED VALVE BOX
PROPOSED VALVE CHAMBER
PROPOSED FIRE HYDRANT
PROPOSED SANITARY SEWER MANHOLE
PROPOSED STORM SEWER MANHOLE
PROPOSED CATCHBASIN MANHOLE
PROPOSED SINGLE CATCHBASIN
PROPOSED DOUBLE CATCHBASIN
PROPOSED CATCHBASIN ELBOW PER CITY STD S31
PROPOSED AREA DRAIN / TRENCH DRAIN TO BE CONNECTED TO INTERNAL BUILDING MECHANICAL SYSTEMS
PROPOSED DEPRESSED CURB LOCATION (D.C.)
PROPOSED BARRIER CURB
PROPOSED ASPHALT ACCESS LANES
OVERLAND SPILL LOCATION
TWSI LOCATION AS PER CITY STD

STORM DRAINAGE

CIST 1-1 / 1.00 / 0.85:
AREA ID TO CISTERN 1
RUNOFF COEFFICIENT
STORM DRAINAGE AREA ha.

CIST 2-1 / 1.00 / 0.85:
AREA ID TO CISTERN 2
RUNOFF COEFFICIENT
STORM DRAINAGE AREA ha.

STORM DRAINAGE BOUNDARY

EXT-1 / 1.00 / 0.50:
AREA ID
EXTERNAL RUNOFF COEFFICIENT
EXTERNAL STORM DRAINAGE AREA ha.

EXTERNAL STORM DRAINAGE BOUNDARY
DIRECTION OF OVERLAND FLOW
PROPOSED STORM MH AND SEWER
PROPOSED CATCHBASIN MANHOLE
PROPOSED SINGLE CATCHBASIN
PROPOSED DOUBLE CATCHBASIN
PROPOSED CATCHBASIN ELBOW PER CITY STD S31
PROPOSED AREA DRAIN / TRENCH DRAIN TO BE CONNECTED TO INTERNAL BUILDING MECHANICAL SYSTEMS
EXISTING STORM MH AND SEWER
EXISTING CATCHBASIN
THERMAL INSULATION ON STORM SEWER WHERE COVER IS LESS THAN 1.5m. THERMAL INSULATION ON WATERMAIN WHERE COVER IS LESS THAN 2.4m AS PER W22.
MAXIMUM STATIC PONDING LIMITS

Stantec

Stantec Consulting Ltd.
400 - 1331 Clyde Avenue
Ottawa ON
Tel. 613.722.4420
www.stantec.com

Copyright Reserved
The Contractor shall verify and be responsible for all dimensions. DO NOT scale the drawing - any errors or omissions shall be reported to Stantec without delay.
The Copyrights to all designs and drawings are the property of Stantec. Reproduction or use for any purpose other than that authorized by Stantec is forbidden.

Legend

Notes

1	REVISED AS PER NEW SITE PLAN	MJS	RB	24.07.19
0	ISSUED FOR SPA	MJS	RB	23.05.25
Revision		By	Appd.	YY.MM.DD

File Name: 160401676 DB.dwg	MJS	RB	MJS	23.03.31
	Dwn.	Chkd.	Dsgn.	YY.MM.DD

Permit-Seal

LICENSED PROFESSIONAL ENGINEER
R. J. B. BRANDRICK
100570025
July 19 2024
PROVINCE OF ONTARIO

Client/Project
BRIGIL HOMES

BASELINE TOWERS 3-4-5-6
2946 BASELINE ROAD
OTTAWA, ON, CANADA

Title
NOTES AND LEGENDS PLAN

Project No. 160401676
Scale 1:500 (0 5 15 25m)

Drawing No. NL-1
Sheet 1 of 7
Revision 1

V:\01-604\active\160401676\design\drawing\160401676 DB.dwg
2024/07/18 3:02 PM By: Sharp, Mike

ORIGINAL SHEET - ARCH D

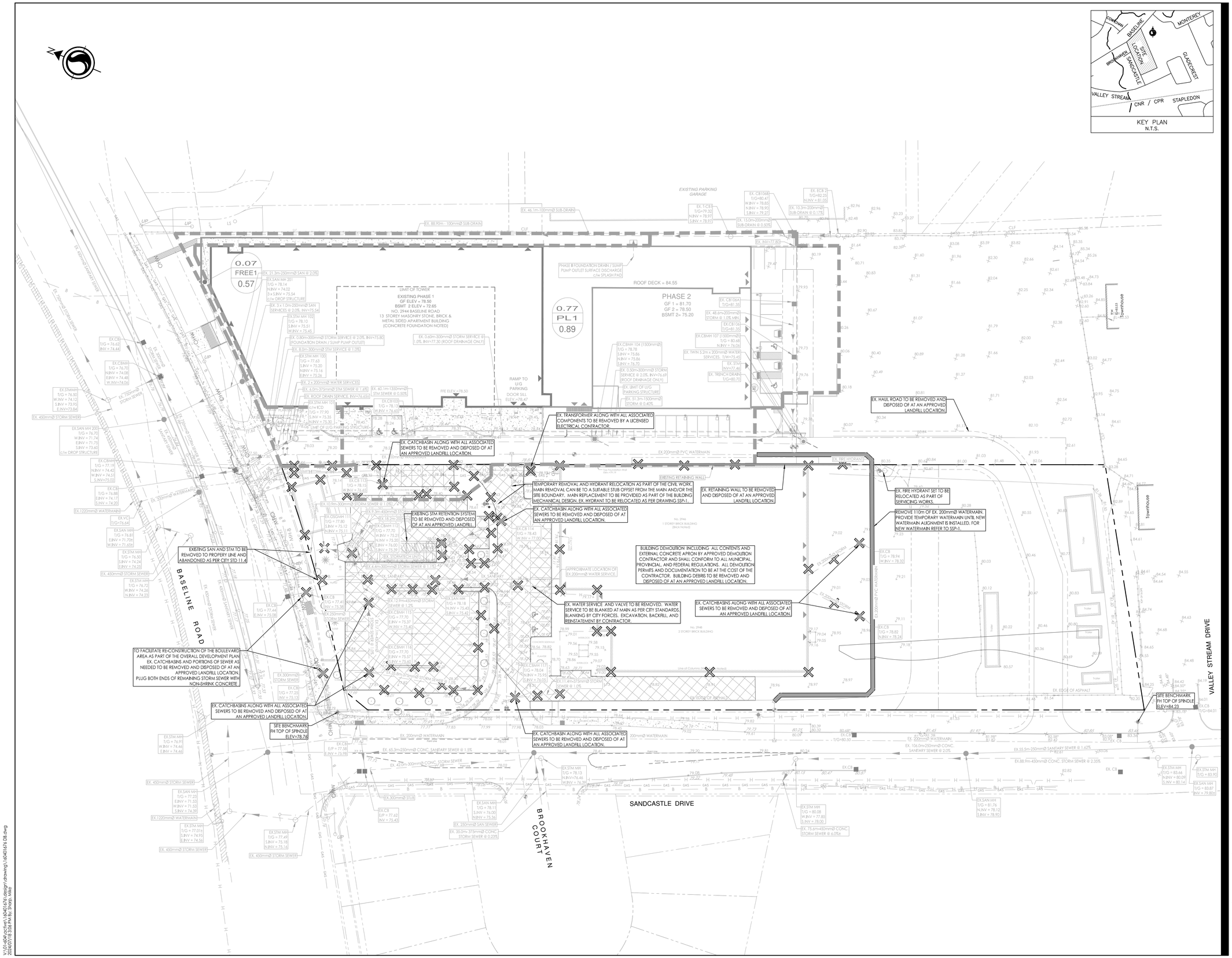

Stantec

Stantec Consulting Ltd.
400 - 1331 Clyde Avenue
Ottawa ON
Tel. 613.722.4420
www.stantec.com

Copyright Reserved

The Contractor shall verify and be responsible for all dimensions. DO NOT scale the drawing - any errors or omissions shall be reported to Stantec without delay.
The Copyrights to all designs and drawings are the property of Stantec. Reproduction or use for any purpose other than that authorized by Stantec is forbidden.

Legend

- ORIGINAL GROUND ELEVATION
- EXISTING WATERMAIN
- EXISTING VALVE AND VALVE BOX
- EXISTING VALVE CHAMBER
- EXISTING REDUCER
- EXISTING FIRE HYDRANT
- EXISTING SANITARY MH AND SEWER
- EXISTING STORM MH AND SEWER
- EXISTING CATCHBASIN MANHOLE
- EXISTING CATCHBASIN
- REMOVAL ITEMS
- ASPHALT REMOVAL
- EXISTING GASMAIN
- EXISTING BELL LINE
- EXISTING ROGERS
- EXISTING OVERHEAD WIRES
- EXISTING UNDERGROUND HYDRO

Notes

1. THE LOCATION OF UTILITIES IS APPROXIMATE ONLY AND THE EXACT LOCATION SHOULD BE DETERMINED BY CONSULTING THE MUNICIPAL AUTHORITIES AND UTILITY COMPANIES CONCERNED. THE CONTRACTOR SHALL PROVE THE LOCATION OF UTILITIES AND SHALL BE RESPONSIBLE FOR THEIR PROTECTION AND THE IMPLEMENTATION OF ANY NECESSARY PROCEDURES CALLED FOR IN THE APPROPRIATE STANDARD AND REGULATIONS.
2. FOR TREE REMOVALS, REFER TO TREE CONSERVATION REPORT PREPARED BY SITE FORM.
3. APPROXIMATE ASPHALT REMOVAL = 2650m²

Revision		By	Appd.	YY.MM.DD
1	REVISED AS PER NEW SITE PLAN	MJS	RB	24.07.19
0	ISSUED FOR SPA	MJS	RB	23.05.25

File Name: 160401676 DB.dwg	MJS	RB	MJS	23.03.31
	Dwn.	Chkd.	Dsgn.	YY.MM.DD

Permit-Seal

LICENSED PROFESSIONAL ENGINEER
R. J. B. BRANDRICK
100570025
July 19 2024
PROVINCE OF ONTARIO

Client/Project

BRIGIL HOMES

BASELINE TOWERS 3-4-5-6
2946 BASELINE ROAD
OTTAWA, ON, CANADA

Title

EXISTING CONDITIONS AND REMOVALS PLAN

Project No. 160401676

Scale 1:400 (0 4 12 20m)

Drawing No. EX/RM-1

Sheet 2 of 7

Revision 1

ORIGINAL SHEET - ARCH D

V:\01-04\active\160401676\design\drawings\160401676 DB.dwg
2024/07/18 3:06 PM By: Stacy, Julie

ICD TABLE				
CATCHBASIN ID	TRIBUTARY AREA ID	ICD TYPE	5-YR FLOW (L/s)	100-YR FLOW (L/s)
EX 100	PL1	EX 171 mm ORIFICE	75.6	97.3
STM 100	CIST 1-1 TO 1-12, EXT-1, EXT-2	BUILDING MECHANICAL	21.3	21.3
STM 200	CIST 2-1 TO 2-11	BUILDING MECHANICAL	17.2	17.2
PARK 1	PARK	UNCONTROLLED	14.8	21.9
	FREE1	UNCONTROLLED	11.6	22.5
	OFF-SITE 1	UNCONTROLLED	8.1	15.5
	OFF-SITE 2	UNCONTROLLED	18.2	35.0

*NOTE: FLOW CONTROL TO BE AS PER BUILDING MECHANICAL ENGINEERING DESIGN. ALL ROOF DRAINAGE CONSIDERED TO CONTRIBUTE DIRECTLY TO THE INTERNAL BUILDING MECHANICAL SYSTEMS. ALL INLETS CONNECTED TO INTERNAL BUILDING MECHANICAL SYSTEMS MUST CAPTURE THE 100 YEAR FLOW CONTRIBUTION.

SEWER AND WATERMAIN CROSSING TABLE						
CROSSING	STM INV	STM OBV	SAN INV	SAN OBV	WTR TOP	WTR BTM
1			77.79(77.72)±	77.99(80.06)±	78.86±	78.66±
2	78.96	79.16	77.66(77.59)±	77.91(77.98)±	78.81±	78.61±
3	78.47	78.77	77.29(77.22)±	77.54(77.61)±	78.17±	77.97±
4			77.34	77.59	78.13±	77.93±
5	76.52	76.82	76.03(75.96)±	76.28(76.35)±	76.06±	75.86±
6			75.54	75.74	76.06±	75.86±
7	78.65	78.95	77.51	77.71	77.01	76.81

* BRACKETS DENOTE ADJUSTED VALUE WITH CONCRETE PIPE THICKNESS

200mmØ WATERMAIN TABLE			
STATION	FINISHED GRADE	TOP W/M	ITEM
0+000	80.48	78.08±	CONNECTION TO EX.200mmØ PVC WATERMAIN WITH 45° BEND
0+004	80.45	78.050	45° BEND HORIZONTAL BEND
0+007.6	80.32	77.920	WATERMAIN ENTERS U/G PARKING
0+024.9	80.28	77.880	WATERMAIN EXITS U/G PARKING
0+037.2	80.11	77.710	200mmØ TEE
0+037.7	80.10	77.700	200mmØ VALVE AND VALVE BOX
0+038.2	80.09	77.690	200mmØ TEE
0+060	79.78	77.380	TOP OF PIPE
0+061.7	79.75	77.35±	CONNECT TO EX. 200mmØ WATERMAIN

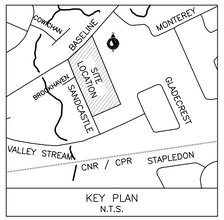

KEY PLAN
N.T.S.

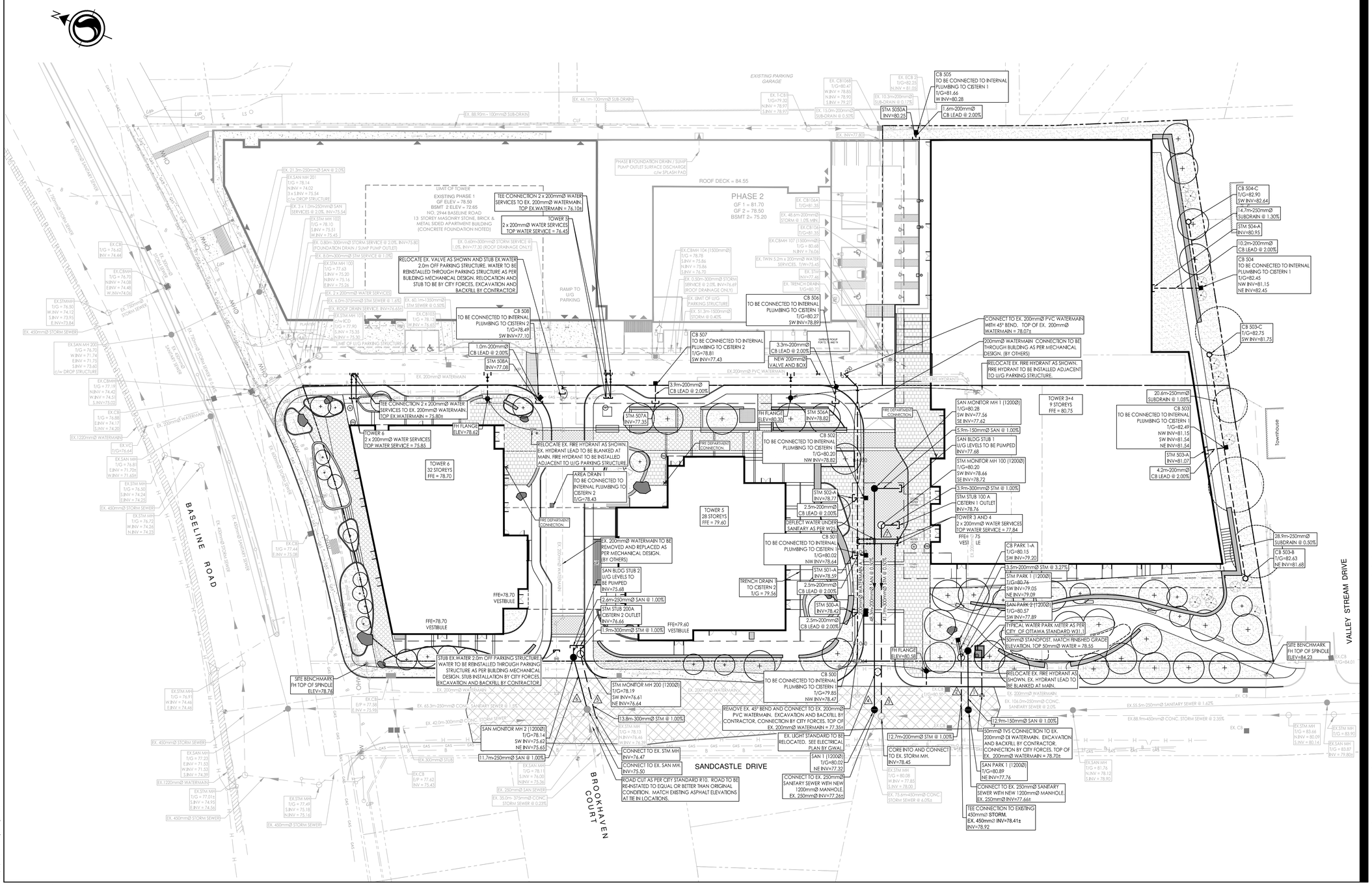

Stantec

Stantec Consulting Ltd.
400 - 1331 Clyde Avenue
Ottawa ON
Tel. 613.722.4420
www.stantec.com

Copyright Reserved

The Contractor shall verify and be responsible for all dimensions. DO NOT scale the drawing - any errors or omissions shall be reported to Stantec without delay.
The Copyrights to all designs and drawings are the property of Stantec. Reproduction or use for any purpose other than that authorized by Stantec is forbidden.

Legend

- PROPOSED WATERMAIN
- PROPOSED VALVE AND VALVE BOX
- PROPOSED VALVE CHAMBER
- PROPOSED REDUCER
- PROPOSED FIRE HYDRANT
- PROPOSED SANITARY SEWER AND MH
- PROPOSED STORM SEWER AND MH
- PROPOSED SINGLE CATCHBASIN
- PROPOSED DOUBLE CATCHBASIN
- PROPOSED CATCHBASIN ELBOW PER CITY STD S31
- PROPOSED AREA DRAIN / TRENCH DRAIN TO BE CONNECTED TO INTERNAL BUILDING MECHANICAL SYSTEMS
- EX/FUT. WATERMAIN
- EXISTING/FUTURE VALVE AND VALVE BOX
- EXISTING/FUTURE VALVE CHAMBER
- EXISTING/FUTURE REDUCER
- EXISTING/FUTURE FIRE HYDRANT
- EXISTING/FUTURE SANITARY SEWER
- EXISTING/FUTURE STORM SEWER
- EXISTING/FUTURE CATCHBASIN MANHOLE
- EXISTING/FUTURE CATCHBASIN
- PROPOSED DEPRESSED CURB LOCATIONS
- PROPOSED BARRIER CURB
- THERMAL INSULATION ON STORM SEWER WHERE COVER IS LESS THAN 1.5m. THERMAL INSULATION ON WATERMAIN WHERE COVER IS LESS THAN 2.4m AS PER W22.
- WATER METER
- REMOTE WATER METER
- LANDSCAPE AREAS
- ROAD CUT AS PER CITY OF OTTAWA STANDARD DETAIL R10
- EXISTING STREET LIGHT CABLE
- EXISTING BELL LINE
- EXISTING ROGERS LINE
- EXISTING GASMAIN

Notes

1. FINAL METER AND REMOTE METER LOCATINS TO BE CONFIRMED BY THE MECHANICAL ENGINEERING CONSULTANT.
2. THE LOCATION OF UTILITIES IS APPROXIMATE ONLY AND THE EXACT LOCATION SHOULD BE DETERMINED BY CONSULTING THE MUNICIPAL AUTHORITIES AND UTILITY COMPANIES CONCERNED. THE CONTRACTOR SHALL PROVE THE LOCATION OF UTILITIES AND SHALL BE RESPONSIBLE FOR THEIR PROTECTION AND THE IMPLEMENTATION OF ANY NECESSARY PROCEDURES CALLED FOR IN THE APPROPRIATE STANDARD AND REGULATIONS.
3. INTERNAL PLUMBING SYSTEMS TO BE DESIGNED BY THE MECHANICAL ENGINEERING CONSULTANT.
4. STORMWATER MANAGEMENT TO BE PROVIDED THROUGH INTERNAL BUILDING MECHANICAL SYSTEMS.
   PHASE 3 + 4 175.0 m^3. MAX RELEASE RATE TO STORM SEWER = 21.3 L/s.
   PHASE 5 + 6 215.0 m^3. MAX RELEASE RATE TO STORM SEWER = 17.2 L/s.

Revision				
1	REVISED AS PER NEW SITE PLAN	MJS	RB	24.07.19
0	ISSUED FOR SPA	MJS	RB	23.05.25
		By	Appd.	YY.MM.DD

File Name: 160401676 DB.dwg

MJS	RB	MJS	23.03.31
Dwn.	Chkd.	Dsgn.	YY.MM.DD

Permit-Seal

LICENSED PROFESSIONAL ENGINEER
R. J. B. BRANDRICK
100570025
July 19 2024
PROVINCE OF ONTARIO

Client/Project

BRIGIL HOMES

BASELINE TOWERS 3-4-5-6
2946 BASELINE ROAD
OTTAWA, ON, CANADA

Title

SITE SERVICING PLAN

Project No.	Scale	
160401676	1:400 (0 4 12 20m)	
Drawing No.	Sheet	Revision
SSP-1	3 of 7	1

V:\01-60\Section\160401676\design\drawings\160401676 DB.dwg
2024/07/18 3:19 PM By: Shopp, Mike

ORIGINAL SHEET - ARCH D

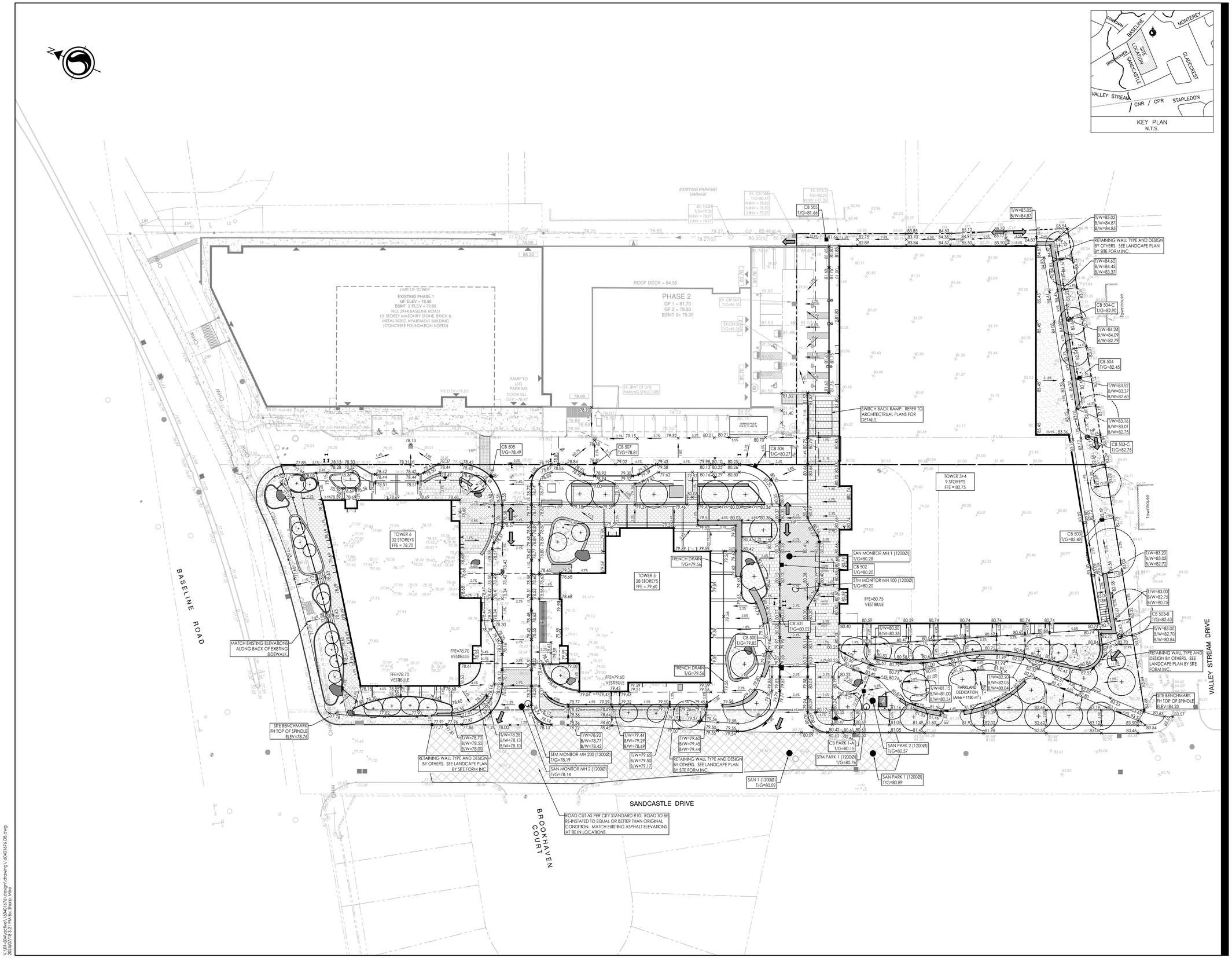

KEY PLAN
N.T.S.

Stantec

Stantec Consulting Ltd.
400 - 1331 Clyde Avenue
Ottawa ON
Tel. 613.722.4420
www.stantec.com

Copyright Reserved

The Contractor shall verify and be responsible for all dimensions. DO NOT scale the drawing - any errors or omissions shall be reported to Stantec without delay.
The Copyrights to all designs and drawings are the property of Stantec. Reproduction or use for any purpose other than that authorized by Stantec is forbidden.

Legend

- ORIGINAL GROUND ELEVATION
- PROPOSED ELEVATION
- PROPOSED LOT CORNER ELEVATION / EXISTING ELEVATION AT LOT CORNER
- FLOW DIRECTION AND GRADE
- FFE=100.00 FINISHED FIRST FLOOR ELEVATION
- USF=97.00 UNDERSIDE OF FOOTING ELEVATION
- E.F. ENGINEERED FILL REQUIRED
- 3:1 TERRACING 3:1 SLOPE MAXIMUM (UNLESS OTHERWISE SHOWN)
- DIRECTION OF OVERLAND FLOW
- PROPOSED VALVE BOX
- PROPOSED VALVE CHAMBER
- PROPOSED FIRE HYDRANT
- PROPOSED SANITARY SEWER MANHOLE
- PROPOSED STORM SEWER MANHOLE
- PROPOSED CATCHBASIN MANHOLE
- PROPOSED SINGLE CATCHBASIN
- PROPOSED DOUBLE CATCHBASIN
- PROPOSED CATCHBASIN ELBOW PER CITY STD S31
- PROPOSED AREA DRAIN / TRENCH DRAIN TO BE CONNECTED TO INTERNAL BUILDING MECHANICAL SYSTEMS
- D.C. PROPOSED DEPRESSED CURB LOCATION
- PROPOSED BARRIER CURB
- PROPOSED ASPHALT ACCESS LANES
- OVERLAND SPILL LOCATION
- TWSI LOCATION AS PER CITY STD

Notes

PAVEMENT STRUCTURE - CAR ONLY PARKING AREAS
50mm SUPERPAVE 12.5 ASPHALTIC CONCRETE
150 OPSS GRANULAR 'A' BASE
300 OPSS GRANULAR 'B' TYPE II

PAVEMENT STRUCTURE - ACCESS LANES AND HEAVY TRUCK PARKING AREAS
40mm SUPERPAVE 12.5 ASPHALTIC CONCRETE
50mm SUPERPAVE 19.0 ASPHALTIC CONCRETE
150 OPSS GRANULAR 'A' BASE
450 OPSS GRANULAR 'B' TYPE II

PAVEMENT STRUCTURE AS PER RECOMMENDATIONS BY GEOTECHNICAL ENGINEER IN THE DOCUMENT Geotechnical Investigation - Proposed Multi-Storey Building - Tower 4 to 6, 2946 Baseline Road, Ottawa, Ontario, Paterson Group Inc., March 24, 2022

ALL RETAINING WALL ELEVATIONS PROVIDED AS GENERAL GRADING REFERENCE ONLY. ALL RETAINING WALL DESIGN BY OTHERS, INCLUDING ALL RELATED DRAINAGE AND SUB-DRAINAGE DESIGN AND DETAIL.

Revision	By	Appd.	YY.MM.DD
1 REVISED AS PER NEW SITE PLAN	MJS	RB	24.07.19
0 ISSUED FOR SPA	MJS	RB	23.05.25

File Name: 160401676 D8.dwg	MJS	RB	MJS	23.03.31
	Dwn.	Chkd.	Dsgn.	YY.MM.DD

Permit-Seal

LICENSED PROFESSIONAL ENGINEER
R. J. B. BRANDRICK
100570025
July 19 2024
PROVINCE OF ONTARIO

Client/Project
BRIGIL HOMES

BASELINE TOWERS 3-4-5-6
2946 BASELINE ROAD
OTTAWA, ON, CANADA

Title
GRADING PLAN

Project No. 160401676

Scale 1:400 (0 4 12 20m)

Drawing No. GP-1

Sheet 4 of 7

Revision 1

ORIGINAL SHEET - ARCH D

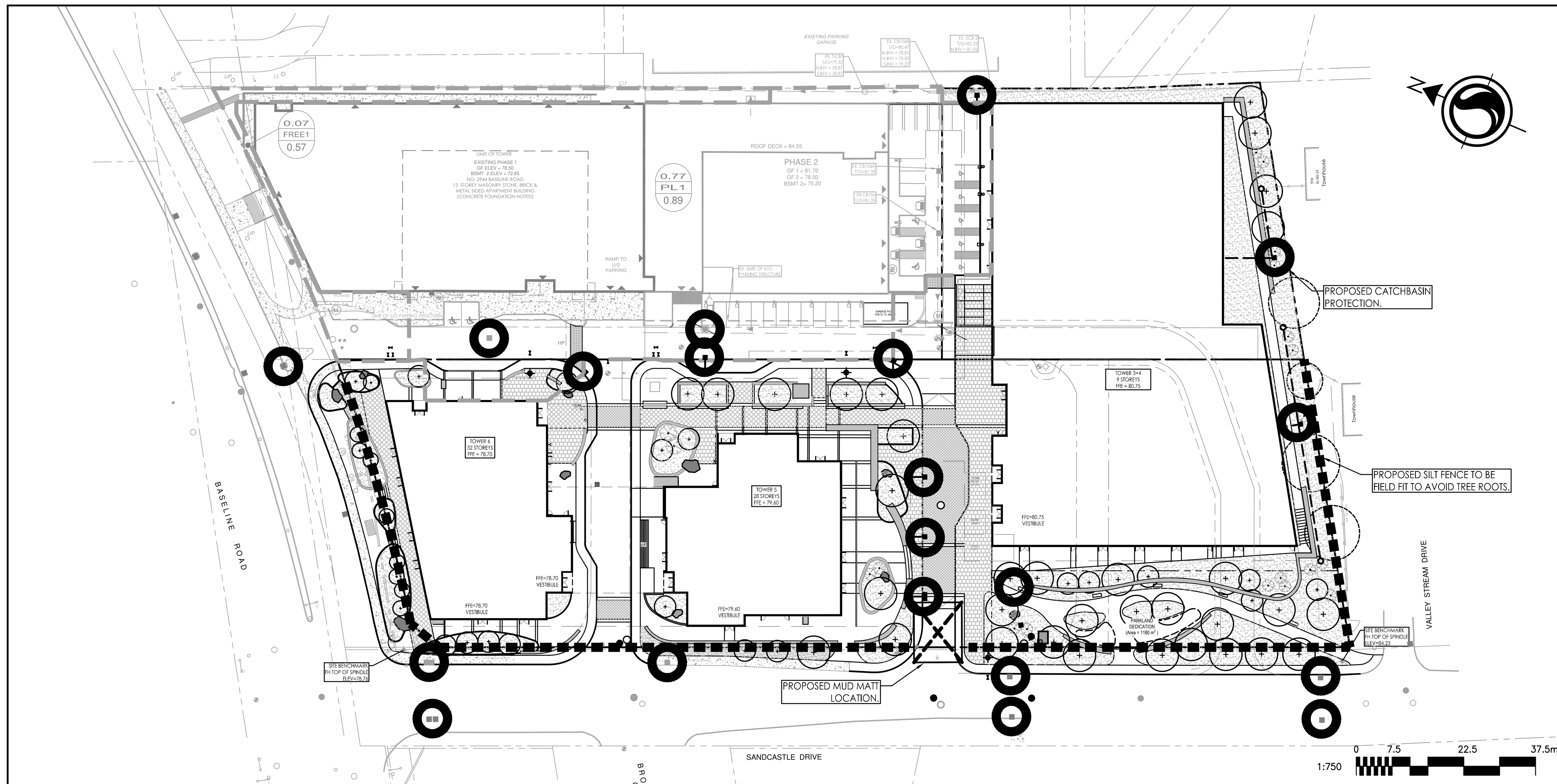

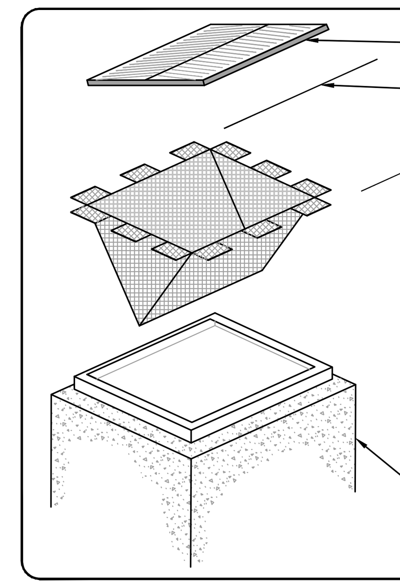

NOTES:

1) TO BE USED UNDER APPROPRIATE DRAINAGE CIRCUMSTANCES, DURING THE CONSTRUCTION PERIOD.
2) SILTSACK SHOULD BE INSPECTED EVERY 2-3 WEEKS AND AFTER EVERY MAJOR STORM.
3) TO BE INSTALLED AND MAINTAINED BY MANUFACTURES RECOMMENDATIONS

ROADSIDE CATCH BASIN PROTECTION DETAIL: TERRAFIX SILTSACK
SCALE: N.T.S.

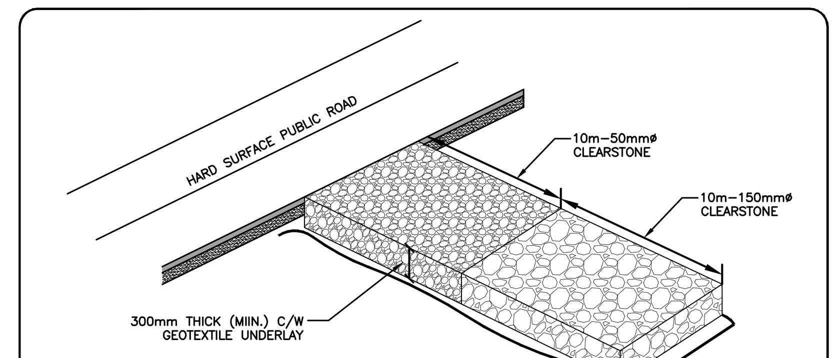

NOTES:

1. MUD MAT TO BE INSTALLED AT ALL CONSTRUCTION ENTRANCES
2. MUD MAT TO EXTEND FULL WIDTH OF ENTRANCE
3. IN THE CASE THAT THE ACCESS CROSSES A CULVERT OR DITCH, SEDIMENT FENCING SHOULD BE INSTALLED ALONG THE EDGES OF THE ACCESS TO PREVENT SEDIMENT FROM BEING WASHED AWAY WITH RUNOFF.
4. THE GRANULAR MATERIAL WILL REQUIRE PERIODIC REPLACEMENT AS IT BECOMES CONTAMINATED BY VEHICLE TRAFFIC.
5. SEDIMENT SHALL BE CLEANED FROM PUBLIC ROADS AT THE END OF EACH DAY.
6. STORM INLETS BOTH ON AND IN THE PROXIMITY OF THE SITE SHALL BE PROTECTED WITH INLET CONTROL MEASURES PRIOR TO ROAD CLEANING ACTIVITIES.

MUD MAT ENTRANCE DETAIL
SCALE: N.T.S.

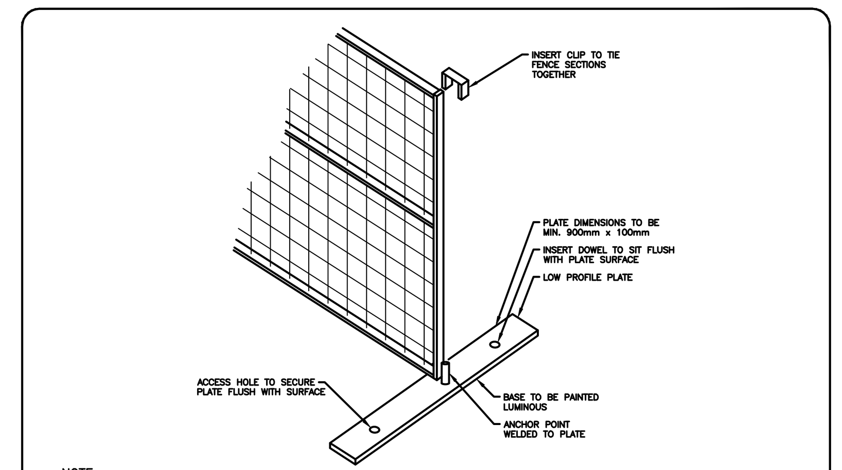

NOTE:

1. NON-TRANSPARENT/OPAQUE SCREENING TO BE INSTALLED ON ALL FENCE SECTIONS.
2. SAFETY SIGNS TO BE SECURED TO FENCE SECTIONS ON THE NON CONSTRUCTION SIDE AS REQUIRED BY PHASING PLAN.
3. INSTALLATION OF FEDERAL SIGNS (2) AS REQUIRED.

WEBSITE OF POSSIBLE SUPPLIER OF APPROVED DETAILS WWW.MODU-LOC.CA

CONSTRUCTION FENCE DETAIL
SCALE: N.T.S.

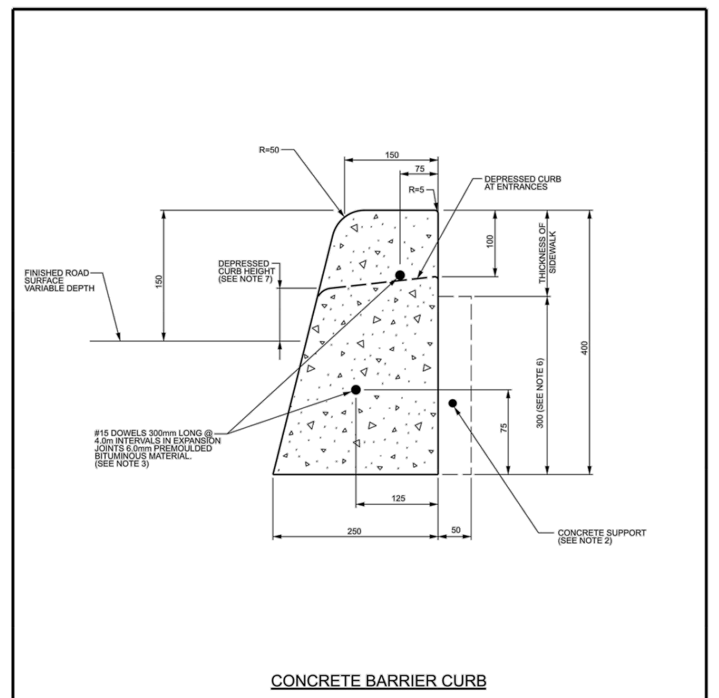

NOTES:

1. THE FULL CURB DEPTH SHALL BE CARRIED THROUGH THE DEPRESSED ACCESS CROSSING.
2. A CONCRETE SUPPORT IS REQUIRED WHEN BUILT ADJACENT TO THE SIDEWALK.
3. IF AN EXTRUSION CURBING MACHINE IS USED, THE EXPANSION BITUMINOUS MATERIAL AND THE #15 DOWELS ARE TO BE PLACED AT THE END OF THE EXTRUSION.
4. ALL DIMENSIONS ARE IN MILLIMETRES UNLESS SHOWN OTHERWISE.
5. DUMMY JOINTS SHALL BE 25mm DEEP, FRONT, BACK AND TOP OF SECTION AT 4m SPACING OR MATCH JOINTING WHERE SIDEWALK IS ADJACENT.
6. FOR DEPRESSED CURB AT ENTRANCES USE 250.
7. DEPRESSED CURB HEIGHT - FOR PEDESTRIAN CURB RAMPS 0 TO 6 mm AND FOR PRIVATE ENTRANCES 0 TO 13mm.

N.T.S.

Ottawa — CONCRETE BARRIER CURB FOR GRANULAR BASE PAVEMENT (MODIFIED OPSD-600.110) — DATE: JANUARY 2003 — REV. DATE: MARCH 2021 — DWG. No.: SC1.1

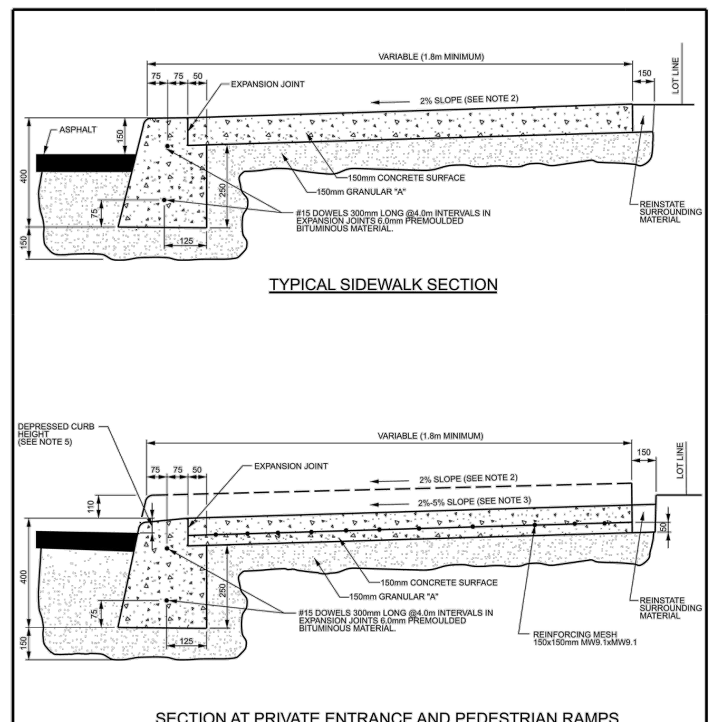

NOTES:

1. ALL DIMENSIONS ARE IN MILLIMETRES UNLESS SHOWN OTHERWISE.
2. THE MAXIMUM SLOPE IS NOT TO EXCEED 2%.
3. FOR CURB RAMPS, SLOPE OF 2% TO 5%, MAXIMUM 8%..
4. EXPANSION AND DUMMY JOINTS AS PER SC5.
5. DEPRESSED CURB HEIGHT - FOR PEDESTRIAN CURB RAMPS 0 TO 6 mm AND FOR PRIVATE ENTRANCES 0 TO 13mm.

N.T.S.

Ottawa — CONCRETE BARRIER CURB WITH SIDEWALK — DATE: JANUARY 2003 — REV. DATE: MARCH 2021 — DWG. No.: SC1.4

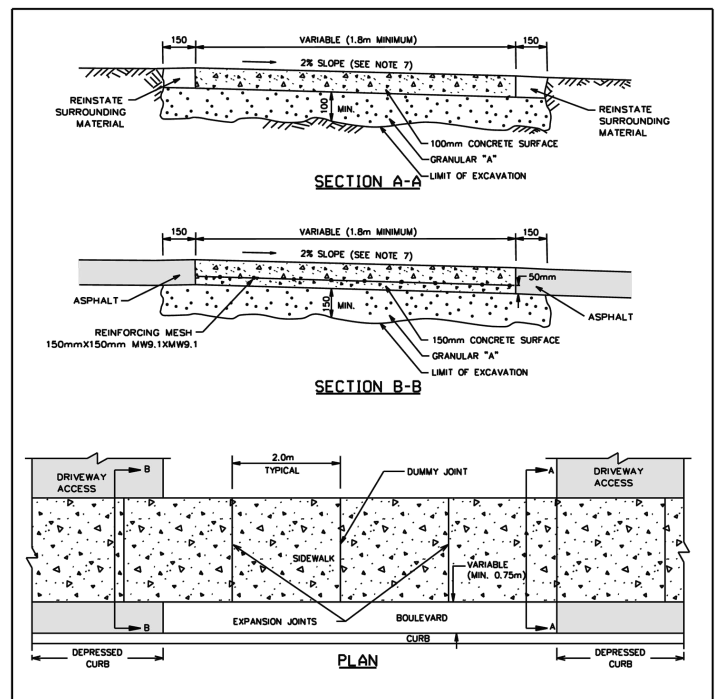

NOTES:

1. CONCRETE AND GRANULAR "A" IS TO BE INCREASED TO 150mm AT THE ENTRANCE AND 150x150mm MW9.1 x MW9.1 REINFORCING MESH IS TO BE PLACED MID DEPTH WITHIN DRIVEWAY ACCESS.
2. TRANSVERSE EXPANSION JOINTS ARE REQUIRED AT THE ENDS, THE MIDPOINT, AT INTERVALS OF 4m MAXIMUM, AND ALSO TO ISOLATE OBSTRUCTIONS FROM SIDEWALK, HYDRANTS, POLES, BUILDINGS, ETC.
3. WHEN THE OVERALL SIDEWALK WIDTH EXCEEDS 2.5m, A LONGITUDINAL CONSTRUCTION JOINT SHALL BE CREATED AT ITS MIDPOINT.
4. EDGES AND JOINTS ARE TO BE FINISHED WITH A 75mm EDGING TOOL.
5. ALL CONCRETE SIDEWALKS ARE TO HAVE A BROOM FINISH UNLESS OTHERWISE SPECIFIED.
6. ALL DIMENSIONS ARE IN MILLIMETRES UNLESS SHOWN OTHERWISE.
7. THE MAXIMUM SLOPE IS NOT TO EXCEED 2%.
8. INSTALL DUMMY TRANSVERSE JOINTS AS REQUIRED SO THERE IS A MAXIMUM SPACING OF 2m BETWEEN ALL JOINTS.
9. SIDEWALK NOT TO BE DEPRESSED ACROSS DRIVEWAY ACCESSES.
10. EXPANSION AND DUMMY JOINTS AS PER SC5

Ottawa — TYPICAL CONCRETE SIDEWALK IN BOULEVARD — DATE: MAY 2001 — REV. DATE: MARCH 2016 — DWG. No.: SC4

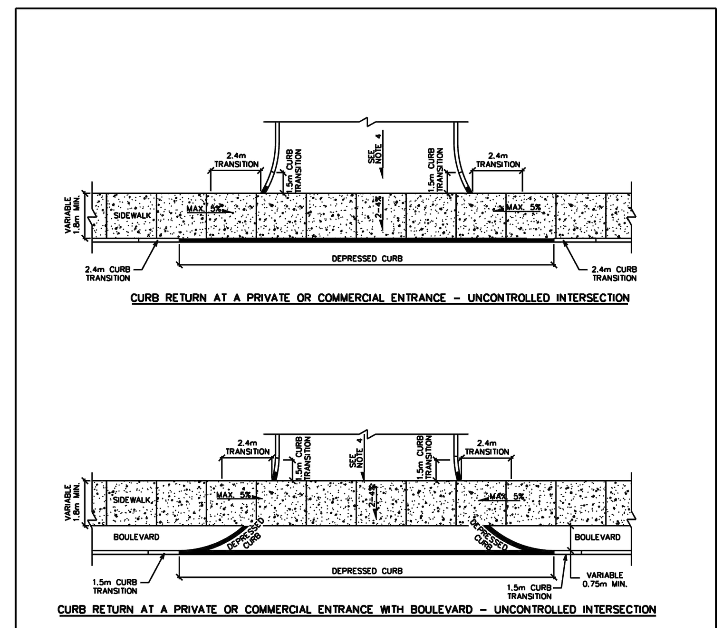

NOTES:

1. ALL DIMENSIONS ARE IN MILLIMETRES UNLESS SHOWN OTHERWISE.
2. CURB DETAILS SEE SC1.1, SC1.2 AND SC1.3.
3. SIDEWALK DETAILS SEE SC2 AND SC3.
4. MAXIMUM SLOPE VARIES, SEE PRIVATE APPROACH BYLAW.
5. UNCONTROLLED INTERSECTION MEANS AN ENTRANCE NOT LOCATED AT A TRAFFIC SIGNAL OR ALL-WAY STOP CONTROL.

Ottawa — CURB RETURN ENTRANCES - UNCONTROLLED INTERSECTIONS — DATE: MARCH 2007 — REV. DATE: MARCH 2021 — DWG. No.: SC7.1

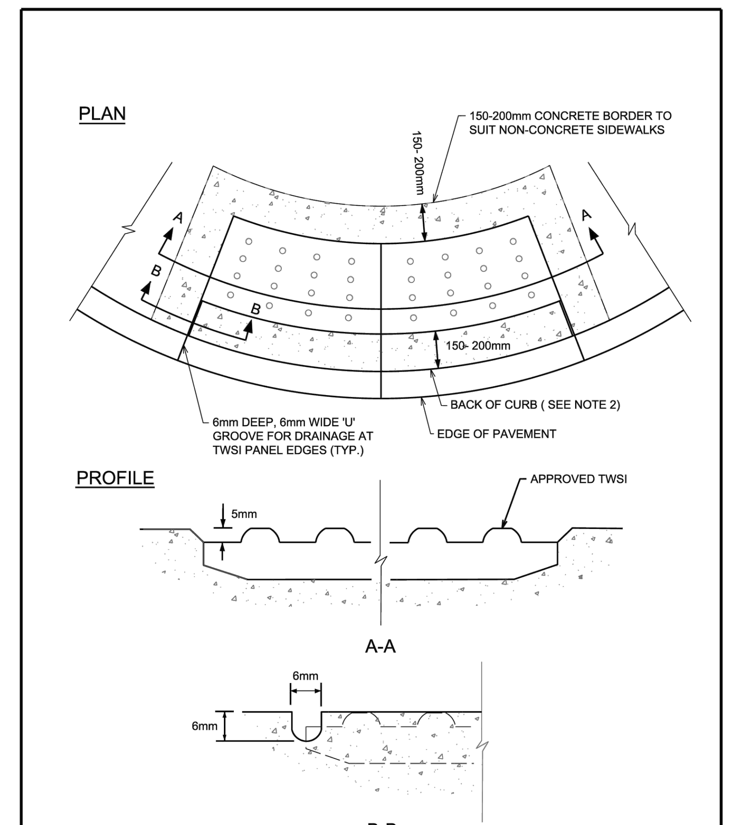

NOTES:

1. TOPS OF TWSI'S (TACTILE WALKING SURFACE INDICATOR) SHALL BE ALIGNED & LEVEL WITH THE ADJACENT CONCRETE SURFACE & INSTALLATION IN WET CONCRETE SHALL BE EFFECTIVE IN PERMANENTLY SECURING THE TWSI IN PLACE ONCE DRY.
2. FOR MONOLITHIC SIDEWALKS, TWSI SHALL BE 300 TO 350mm BACK FROM THE CURB FACE.

N.T.S.

Ottawa — TWSI DETAIL — DATE: MARCH 2015 — REV. DATE: MARCH 2016 — DWG. No.: SC7.3

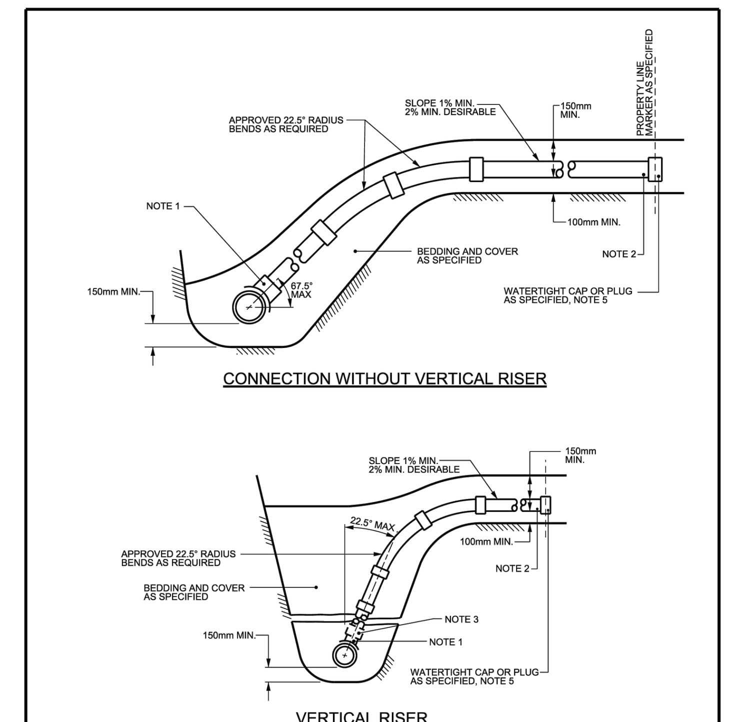

NOTES:

1. ALL DIAMETERES OF SERVICE CONNECTIONS THAT HAVE NOMINAL DIAMETERS NO GREATER THAN 50% OF THE NOMINAL DIAMETER OF THE RIGID SEWER PIPE SHALL BE MADE USING A BELL END INSERT AS PER S11.2 OR AN APPROVED RUBBER GASKETED INSERT, INSTALLED ABOVE THE SPRING LINE.
2. SANITARY SERVICES TO BE 135mm AND STORM SERVICES TO BE 100mm FOR NEW RESIDENCES UNLESS SPECIFIED OTHERWISE. SERVICE PIPE AND RADIUS BENDS TO BE APPROVED CSA B182.2, SDR28 PRODUCTS UNLESS SPECIFIED OTHERWISE.
3. APPROVED CONTROLLED SETTLEMENT JOINTS OPTIONAL FOR SERVICE CONNECTIONS TO MAIN SEWERS UP TO 5m DEEP. WHERE APPROVED, CONNECTIONS TO SEWERS OVER 5m DEEP REQUIRE APPROVED CONTROLLED SETTLEMENT JOINTS.
4. VERTICAL RISER SHALL BE SAME AS SERVICE PIPE UNLESS OTHERWISE SPECIFIED.
5. CAP OR PLUG AT THE PROPERTY LINE SHALL BE ADEQUATELY BRACED TO WITHSTAND TESTING PRESSURE.
6. FOR NEW CONSTRUCTION, INSERTS MUST BE INSTALLED ON THE MAIN PIPE BEFORE THAT PIPE IS LAID. FOR SERVICES/BRANCHES 375mm DIA. OR LESS, APPROVED "CORED TEES" MAY BE USED.
7. APPROVED CUT-IN TOOL MUST BE USED FOR FIELD MADE CONNECTIONS.
8. ALL DIMENSIONS ARE IN MILLIMETRES UNLESS OTHERWISE SHOWN.

N.T.S.

Ottawa — SEWER SERVICE CONNECTIONS FOR RIGID MAIN SEWER PIPE (MODIFIED OPSD-1006.010) — DATE: MARCH 2006 — REV. DATE: MARCH 2014 — DWG. No.: S11

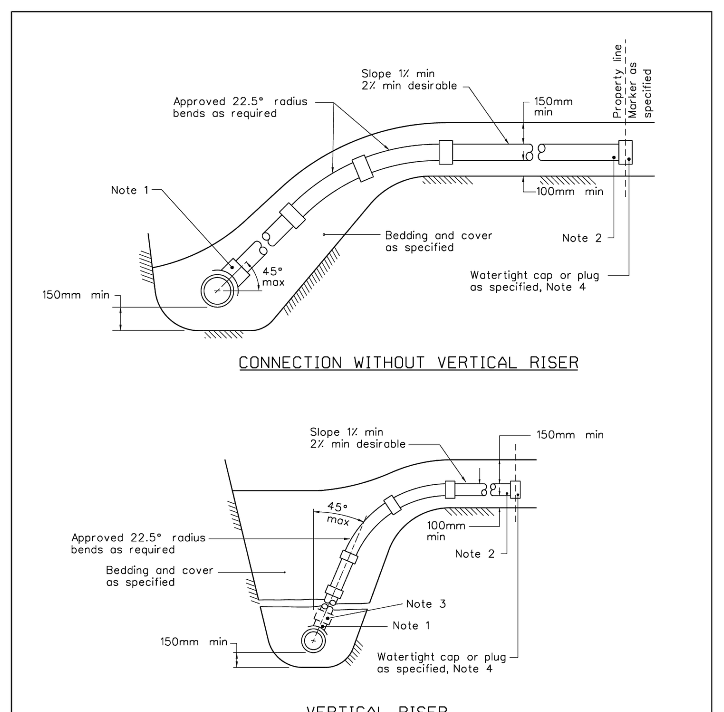

NOTES:

1. ALL DIAMETERS OF SERVICE CONNECTIONS TO FLEXIBLE MAIN SEWER SHALL BE MADE USING APPROVED TEE OR WYE FITTINGS.
2. SANITARY SERVICES TO BE 135mm AND STORM SERVICES TO BE 100mm FOR NEW RESIDENCES UNLESS SPECIFIED OTHERWISE. SERVICE PIPE AND RADIUS BENDS TO BE APPROVED CSA B182.2, SDR28 PRODUCTS UNLESS SPECIFIED OTHERWISE.
3. APPROVED CONTROLLED SETTLEMENT JOINTS OPTIONAL FOR SERVICE CONNECTIONS TO MAIN SEWERS UP TO 5m DEEP. WHERE APPROVED, CONNECTIONS TO SEWERS OVER 5m DEEP REQUIRE APPROVED CONTROLLED SETTLEMENT JOINTS.
4. CAP OR PLUG AT THE PROPERTY LINE SHALL BE ADEQUATELY BRACED TO WITHSTAND TESTING PRESSURE.
5. ALL DIMENSIONS ARE IN MILLIMETRES UNLESS OTHERWISE SHOWN.

Ottawa — SEWER SERVICE CONNECTIONS FOR FLEXIBLE MAIN SEWER PIPE (MODIFIED OPSD-1006.020) — DATE: MARCH 2006 — REV. DATE: MARCH 2013 — DWG. No.: S11.1

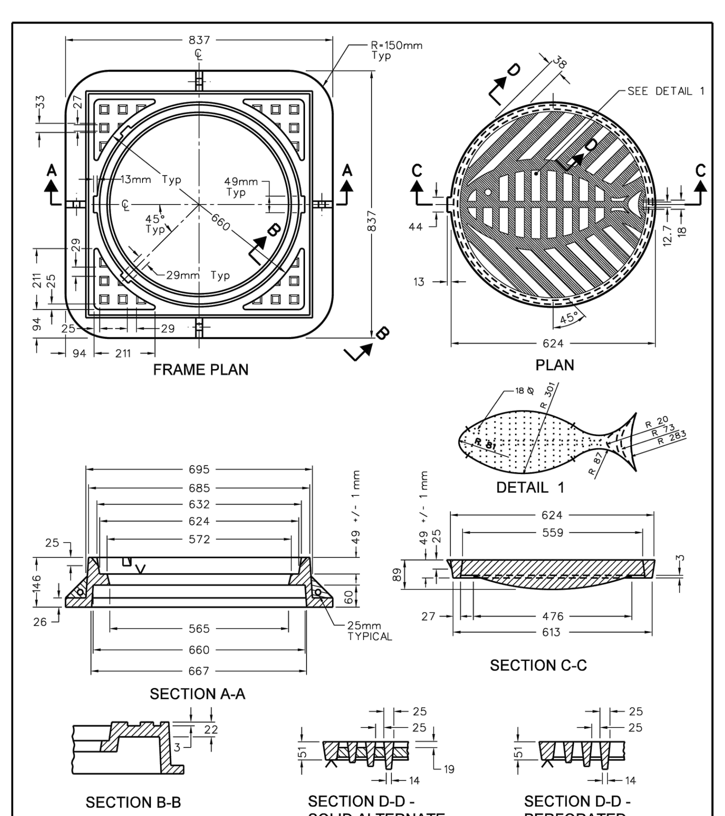

NOTES:

1. ALL DIMENSIONS SHOWN ARE FOR FINISHED CASTINGS ONLY. PATTERN MAKERS AND CASTING SHOP SHOULD MAKE ALLOWANCES ACCORDINGLY.
2. ALL DIMENSIONS ARE IN MILLIMETRES UNLESS SHOWN OTHERWISE.
3. FOR NEW CONSTRUCTION WHERE SURFACE INLETS ARE SPECIFIED.
4. COMPANIES WITH GRATE DIMENSIONS NOT EXACTLY THE SAME AS SHOWN ABOVE WILL ALSO BE CONSIDERED.
5. ALTERNATE SOLID COVER TO HAVE EYE 25mm Dia. HOLE WITH 25mm APPROVED PLUG

Ottawa — HEAVY DUTY "FISH" TYPE ROUND CATCH BASIN COVER (MODIFIED OPSD-400.07) — DATE: MAY 2005 — REV. DATE: MARCH 2017 — DWG. No.: S19

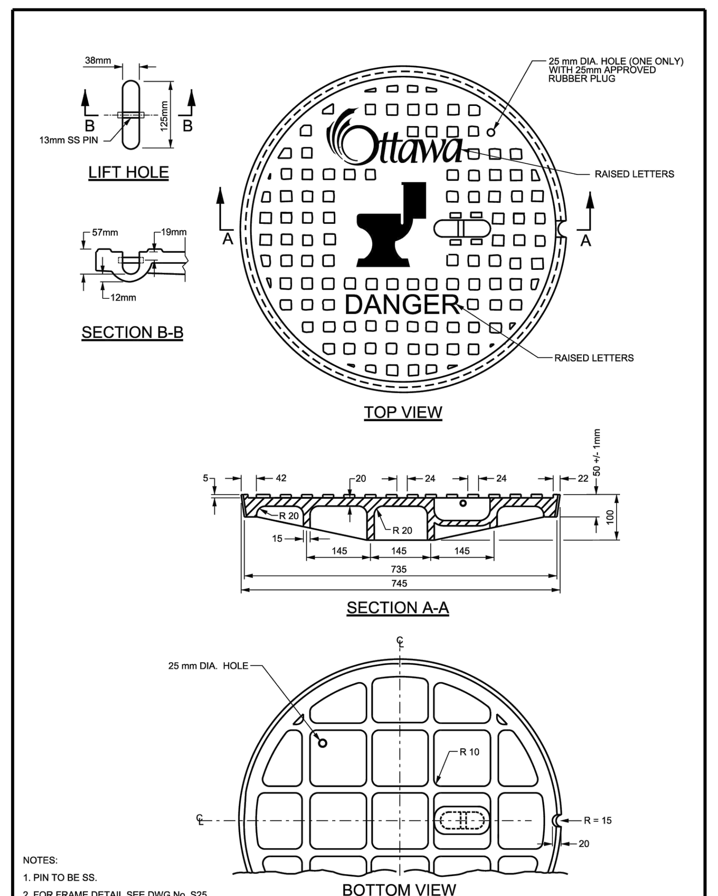

NOTES:

1. PIN TO BE SS.
2. FOR FRAME DETAIL SEE DWG No. S25.
3. ALL DIMENSIONS ARE IN MILLIMETRES UNLESS OTHERWISE SHOWN.

N.T.S.

Ottawa — STANDARD CIRCULAR SANITARY & COMBINED MAINTENANCE HOLE COVER — DATE: MARCH 2008 — REV. DATE: MARCH 2017 — DWG. No.: S24

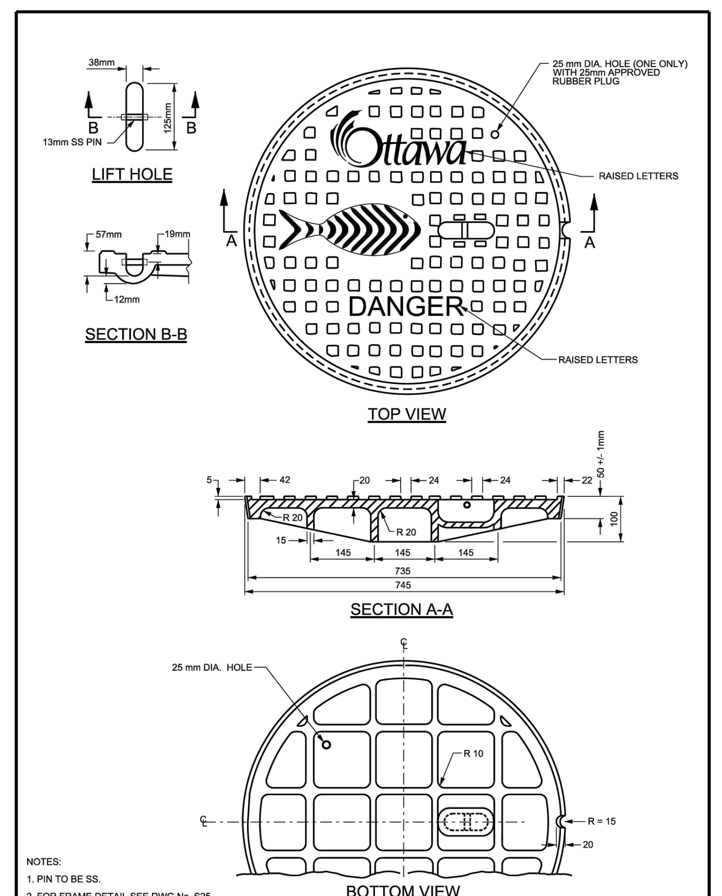

NOTES:

1. PIN TO BE SS.
2. FOR FRAME DETAIL SEE DWG No. S25.
3. ALL DIMENSIONS ARE IN MILLIMETRES UNLESS OTHERWISE SHOWN.

N.T.S.

Ottawa — STANDARD CIRCULAR STORM MAINTENANCE HOLE COVER — DATE: MARCH 2010 — REV. DATE: MARCH 2017 — DWG. No.: S24.1

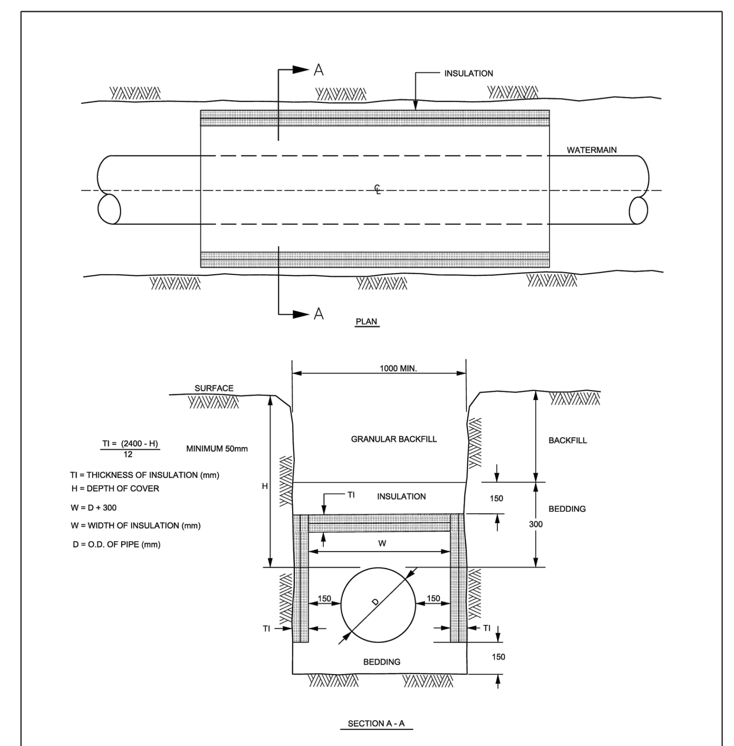

NOTES

FOR 150 - 400mm (NOMINAL DIAMETER) WATERMAINS, WHERE THE DEPTH OF COVER IS LESS THAN 2400mm

1. INCREMENTS OF THICKNESS SHALL BE ADJUSTABLE TO 25mm.
2. IN PROXIMITY OF MAINTENANCE HOLES, CULVERTS, CATCHBASINS, ETC., INSULATION SHALL BE PLACED PER DETAIL W23
3. DEPTH OF COVER LESS THAN 1200mm REQUIRES SPECIAL DESIGN
4. STAGGER JOINTS OF MULTIPLE SHEETS.
5. ALL DIMENSIONS ARE IN MILLIMETRES UNLESS SHOWN OTHERWISE.

Ottawa — THERMAL INSULATION FOR WATERMAINS IN SHALLOW TRENCHES — DATE: MAY 2001 — REV. DATE: MARCH 2013 — DWG. No.: W22

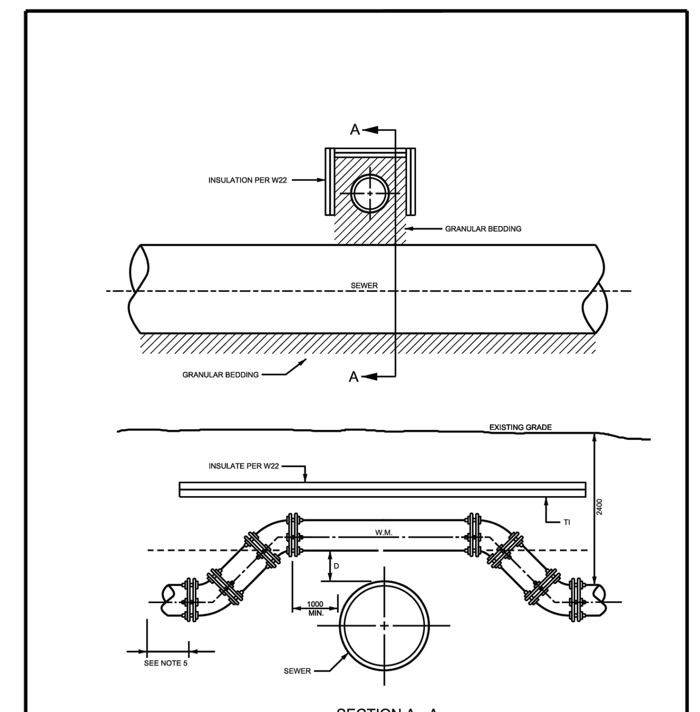

NOTES:

FOR WATERMAIN 100mm (NOMINAL) TO 400mm (NOMINAL)

1. BARREL TO BARREL SEPARATION (D) SHALL BE 250mm MINIMUM.
2. THRUST BLOCKS FOR MAINS LARGER THAN 400mm (NOMINAL) SHALL BE PER SPECIAL DESIGN.
3. FOR 300mm (NOMINAL) AND 400mm (NOMINAL) MAINS, BENDS SHALL BE MAX. 22° 30'.
4. CONCRETE FOR THRUST BLOCKS SHALL BE 20 MPa.
5. REFER TO W25.6 FOR RESTRAINED LENGTH REQUIREMENTS.
6. REFER TO W25.3 AND W25.4 FOR THRUST BLOCK REQUIREMENTS.
7. ALL DIMENSIONS ARE IN MILLIMETRES UNLESS SHOWN OTHERWISE.
8. DESIGNED TO MEET THE INTENT OF THE MOE WATERMAIN DESIGN CRITERIA JUNE 2012.
9. CATHODIC PROTECTION MEASURES SHALL BE INSTALLED IN ACCORDANCE WITH W39, W40, AND W42.
10. TRACER WIRE REQUIRED FOR PVC, PEX AND HDPE WATERMAIN PIPE ONLY AS PER W36.

Ottawa — WATERMAIN CROSSING OVER SEWER — DATE: MAY 2001 — REV. DATE: MARCH 2021 — DWG. No.: W25.2

Stantec

Stantec Consulting Ltd.
400 - 1331 Clyde Avenue
Ottawa ON
Tel. 613.722.4420
www.stantec.com

Copyright Reserved

The Contractor shall verify and be responsible for all dimensions. DO NOT scale the drawing - any errors or omissions shall be reported to Stantec without delay.
The Copyrights to all designs and drawings are the property of Stantec. Reproduction or use for any purpose other than that authorized by Stantec is forbidden.

Legend

- PROPOSED SILT FENCE BOUNDARY AS PER OPSD 219.110
- PROPOSED CATCH BASIN PROTECTION AS PER TERRAFIX SILTSACK DETAIL
- PROPOSED MUD MAT LOCATION
- PROPOSED VALVE BOX
- PROPOSED VALVE CHAMBER
- PROPOSED FIRE HYDRANT
- PROPOSED SANITARY SEWER MANHOLE
- PROPOSED STORM SEWER MANHOLE
- PROPOSED SINGLE CATCHBASIN
- PROPOSED DOUBLE CATCHBASIN

Best Management Practices

CONTRACTOR TO PROVIDE EROSION AND SEDIMENT CONTROLS (BEST MANAGEMENT PRACTICES) DURING CONSTRUCTION OF THIS PROJECT.

EROSION MUST BE MINIMIZED AND SEDIMENTS MUST BE REMOVED FROM CONSTRUCTION SITE RUN-OFF IN ORDER TO PROTECT DOWNSTREAM AREAS. DURING ALL CONSTRUCTION, EROSION AND SEDIMENTATION SHOULD BE CONTROLLED BY THE FOLLOWING TECHNIQUES:

1. LIMIT THE EXTENT OF EXPOSED SOILS AT ANY GIVEN TIME.
2. REVEGETATE EXPOSED AREAS AND SLOPES AS SOON AS POSSIBLE.
3. MINIMIZE AREA TO BE CLEARED AND GRUBBED.
4. PROTECT EXPOSED SLOPES WITH PLASTIC OR SYNTHETIC MULCHES.
5. INSTALL CATCH BASIN INSERTS OR EQUIVALENT IN ALL PROPOSED CATCH BASINS AND CATCH BASIN MANHOLES AND IN ALL EXISTING CATCH BASINS THAT WILL RECEIVE RUN-OFF FROM THE SITE.
6. A SILT FENCE SHALL BE INSTALLED AROUND THE PERIMETER OF ALL AND ANY STOCKPILES OF MATERIAL TO BE USED OR REMOVED FROM SITE. (LOCATION TO BE DETERMINED)
7. A VISUAL INSPECTION SHALL BE DONE DAILY ON SEDIMENT CONTROL MEASURES AND CLEANED OF ANY ACCUMULATED SILT AS REQUIRED. THE DEPOSITS WILL BE DISPOSED OFF SITE AS PER THE REQUIREMENTS OF THE CONTRACT.
8. SEDIMENT CONTROL BARRIERS MAY ONLY BE REMOVED TEMPORARILY WITH APPROVAL OF CONTRACT ADMINISTRATOR TO ACCOMMODATE CONSTRUCTION OPERATIONS. ALL AFFECTED BARRIERS MUST BE REINSTATED AT NIGHT WHEN CONSTRUCTION IS COMPLETED. NO REMOVAL WILL OCCUR IF THERE IS A SIGNIFICANT RAINFALL EVENT ANTICIPATED (>10mm) UNLESS A NEW DEVICE HAS BEEN INSTALLED TO PROTECT EXISTING STORM AND SANITARY SEWER SYSTEMS, OR DOWNSTREAM WATERCOURSES.
9. NO REFUELING OR CLEANING OF EQUIPMENT IS PERMITTED NEAR ANY EXISTING WATERWAY.
10. CONTRACTOR SHALL REMOVE SEDIMENT CONTROL MEASURES WHEN, IN THE OPINION OF THE CONTRACT ADMINISTRATOR, THE MEASURE(S) IS NO LONGER REQUIRED. NO CONTROL MEASURES SHALL BE PERMANENTLEY REMOVED WITHOUT PRIOR WRITTEN AUTHORIZATION FROM THE CONTRACT ADMINISTRATOR.
11. THE CONTRACTOR SHALL PERIODICALLY, OR WHEN REQUESTED BY THE CONTRACT ADMINISTRATOR, CLEAN OUT ACCUMULATED SEDIMENTS AS REQUIRED.
12. THE CONTRACTOR SHALL IMMEDIATELY REPORT TO THE ENGINEER ANY ACCIDENTAL DISCHARGES OF SEDIMENT MATERIAL INTO THE WATERCOURSE. APPROPRIATE RESPONSE MEASURES, INCLUDING ANY REPAIRS TO EXISTING CONTROL MEASURES OR THE IMPLEMENTATION OF ADDITIONAL CONTROL MEASURES, SHALL BE CARRIED OUT BY THE CONTRACTOR WITHOUT DELAY.
13. CONTRACTOR SHALL INSTALL MUD MAT AT CONSTRUCTION ENTRANCE TO THE SITE.

Revision		By	Appd.	YY.MM.DD
1	REVISED AS PER NEW SITE PLAN	MJS	RB	24.07.19
0	ISSUED FOR SPA	MJS	RB	23.05.25

File Name: 160401676 DB.dwg	MJS	RB	MJS	23.03.31
	Dwn.	Chkd.	Dsgn.	YY.MM.DD

Permit-Seal

LICENSED PROFESSIONAL ENGINEER
R. J. B. BRANDRICK
100570025
July 19 2024
PROVINCE OF ONTARIO

Client/Project
BRIGIL HOMES

BASELINE TOWERS 3-4-5-6
2946 BASELINE ROAD
OTTAWA, ON, CANADA

Title
EROSION CONTROL PLAN AND DETAIL SHEET

Project No.	Scale	
160401676		
Drawing No.	Sheet	Revision
EC/DS-1	5 of 7	1

V:\01-604\active\160401676\design\drawing\160401676 DB.dwg
2024/07/18 3:24 PM By: Sharp, Mike

ORIGINAL SHEET - ARCH D

ICD TABLE				
CATCHBASIN ID	TRIBUTARY AREA ID	ICD TYPE	5-YR FLOW (L/s)	100-YR FLOW (L/s)
EX 100	PL1	EX 171 mm ORIFICE	75.6	97.3
STM 100	CIST 1-1 TO 1-12, EXT-1, EXT-2	BUILDING MECHANICAL	21.3	21.3
STM 200	CIST 2-1 TO 2-11	BUILDING MECHANICAL	17.2	17.2
PARK 1	PARK	UNCONTROLLED	14.8	21.9
	FREE1	UNCONTROLLED	11.6	22.5
	OFF-SITE 1	UNCONTROLLED	8.1	15.5
	OFF-SITE 2	UNCONTROLLED	18.2	35.0

*NOTE: FLOW CONTROL TO BE AS PER BUILDING MECHANICAL ENGINEERING DESIGN. ALL ROOF DRAINAGE CONSIDERED TO CONTRIBUTE DIRECTLY TO THE INTERNAL BUILDING MECHANICAL SYSTEMS. ALL INLETS CONNECTED TO INTERNAL BUILDING MECHANICAL SYSTEMS MUST CAPTURE THE 100 YEAR FLOW CONTRIBUTION.

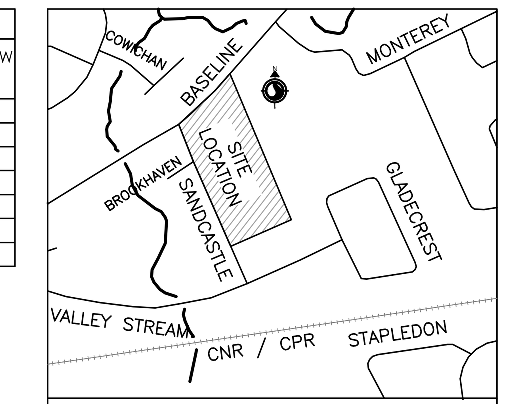

KEY PLAN
N.T.S.

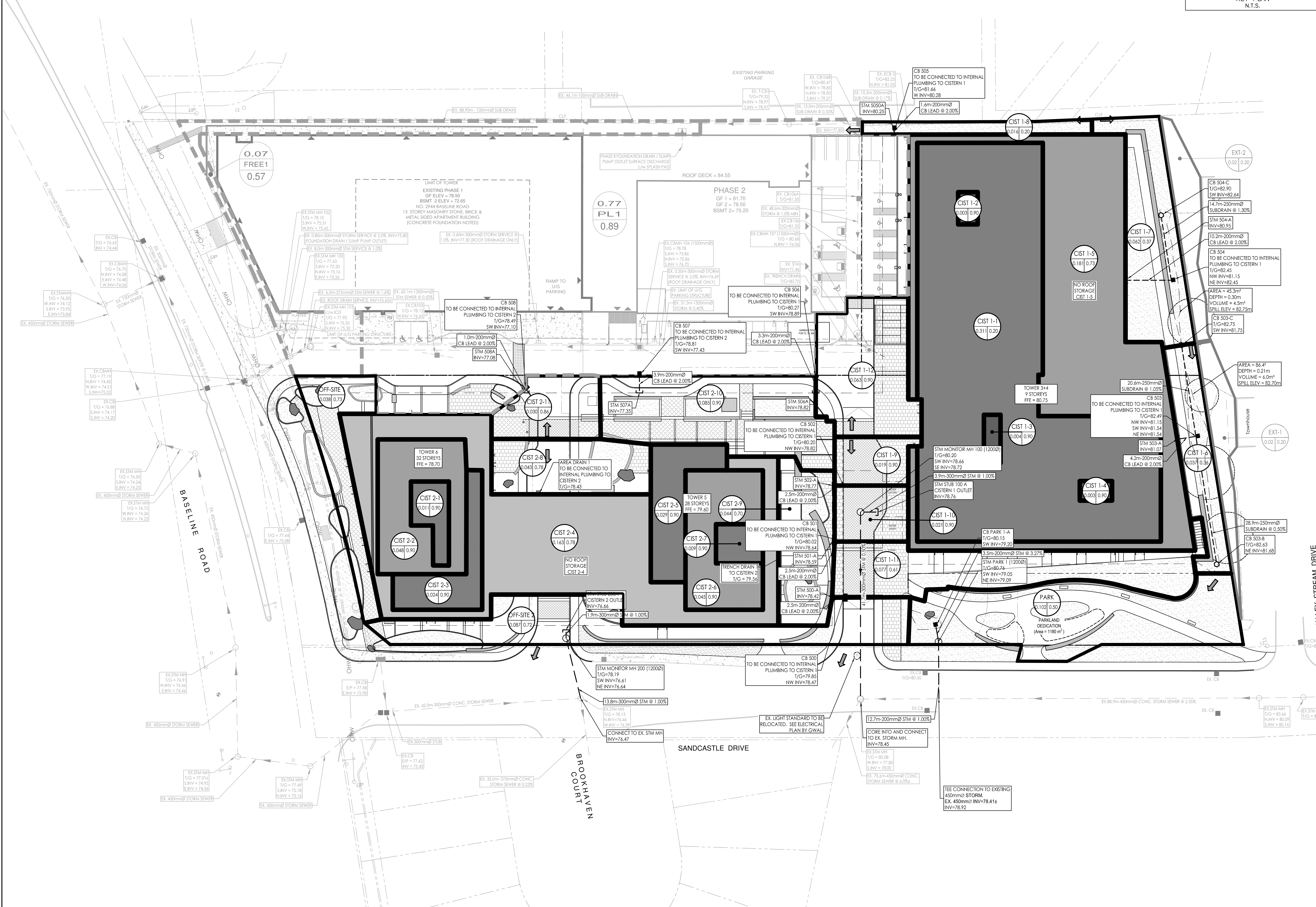

Legend

- CIST 1-1 / 1.00 / 0.85 — AREA ID TO CISTERN 1; RUNOFF COEFFICIENT; STORM DRAINAGE AREA ha.
- CIST 2-1 / 1.00 / 0.85 — AREA ID TO CISTERN 2; RUNOFF COEFFICIENT; STORM DRAINAGE AREA ha.
- STORM DRAINAGE BOUNDARY
- EXT-1 / 1.00 / 0.50 — AREA ID; EXTERNAL RUNOFF COEFFICIENT; EXTERNAL STORM DRAINAGE AREA ha.
- EXTERNAL STORM DRAINAGE BOUNDARY
- DIRECTION OF OVERLAND FLOW
- PROPOSED STORM MH AND SEWER
- PROPOSED CATCHBASIN MANHOLE
- PROPOSED SINGLE CATCHBASIN
- PROPOSED DOUBLE CATCHBASIN
- PROPOSED CATCHBASIN ELBOW PER CITY STD S31
- PROPOSED AREA DRAIN / TRENCH DRAIN TO BE CONNECTED TO INTERNAL BUILDING MECHANICAL SYSTEMS
- EXISTING STORM MH AND SEWER
- EXISTING CATCHBASIN
- THERMAL INSULATION ON STORM SEWER WHERE COVER IS LESS THAN 1.5m. THERMAL INSULATION ON WATERMAIN WHERE COVER IS LESS THAN 2.4m AS PER W22.
- MAXIMUM STATIC PONDING LIMITS

Notes

1. STORMWATER MANAGEMENT TO BE PROVIDED THROUGH INTERNAL BUILDING MECHANICAL SYSTEMS.
   PHASE 3 + 4 = 175.0 m³
   PHASE 5 + 6 = 215.0 m³
   MAX. RELEASE RATE TO STORM SEWER
   PHASE 3 + 4 RELEASE RATE = 21.3 L/s
   PHASE 5 + 6 RELEASE RATE = 17.2 L/s
   STORAGE AND RELEASE RATE CONTROL AS PER BUILDING MECHANICAL ENGINEERING DESIGN.

Stantec

Stantec Consulting Ltd.
400 - 1331 Clyde Avenue
Ottawa ON
Tel. 613.722.4420
www.stantec.com

Copyright Reserved
The Contractor shall verify and be responsible for all dimensions. DO NOT scale the drawing - any errors or omissions shall be reported to Stantec without delay.
The Copyrights to all designs and drawings are the property of Stantec. Reproduction or use for any purpose other than that authorized by Stantec is forbidden.

		By	Appd.	YY.MM.DD
1	REVISED AS PER NEW SITE PLAN	MJS	RB	24.07.19
0	ISSUED FOR SPA	MJS	RB	23.05.25

Revision

File Name: 160401676 DB.dwg	MJS	RB	MJS	23.03.31
	Dwn.	Chkd.	Dsgn.	YY.MM.DD

Permit-Seal

LICENSED PROFESSIONAL ENGINEER
R. J. B. BRANDRICK
100570025
July 19 2024
PROVINCE OF ONTARIO

Client/Project
BRIGIL HOMES

BASELINE TOWERS 3-4-5-6
2946 BASELINE ROAD
OTTAWA, ON, CANADA

Title
STORM DRAINAGE PLAN

Project No. 160401676
Scale 1:400 (0 4 12 20m)
Drawing No. SD-1
Sheet 6 of 7
Revision 1

V:\01-604\active\160401676\design\drawing\160401676 DB.dwg
2024/07/18 3:28 PM By: Sharp, Mike

ORIGINAL SHEET - ARCH D

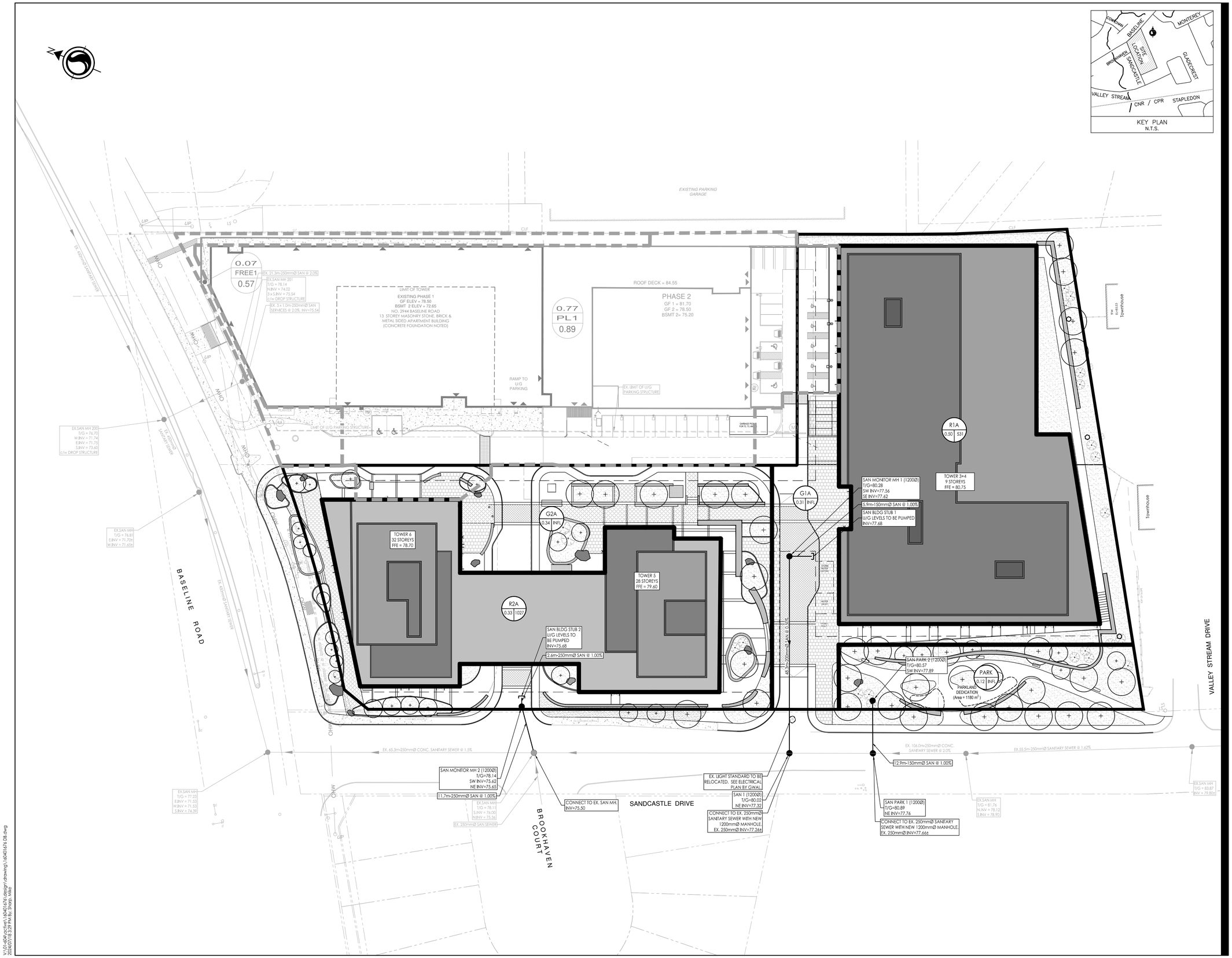

KEY PLAN
N.T.S.

Stantec

Stantec Consulting Ltd.
400 - 1331 Clyde Avenue
Ottawa ON
Tel. 613.722.4420
www.stantec.com

Copyright Reserved

The Contractor shall verify and be responsible for all dimensions. DO NOT scale the drawing - any errors or omissions shall be reported to Stantec without delay.
The Copyrights to all designs and drawings are the property of Stantec. Reproduction or use for any purpose other than that authorized by Stantec is forbidden.

Legend

R100A — SANITARY DRAINAGE AREA ID#
0.31 — POPULATION COUNT
50 — SANITARY DRAINAGE AREA ha.

G100A — SANITARY DRAINAGE AREA ID#
0.11 — INFILTRATION RATE OF 0.33 L/s/Ha APPLIED
INFL — SANITARY DRAINAGE AREA ha.

SANITARY DRAINAGE AREA
PROPOSED SANITARY MH AND SEWER
EXISTING SANITARY MH AND SEWER

Notes

SANITARY STATS

POPULATION COUNT

TOWER 3 AND 4

16 - BACHELOR @ 1.4 PPU = 22 PEOPLE
228 - 1 BEDROOM APTS @ 1.4 PPU = 319 PEOPLE
40 - 2 BEDROOM APTS @ 2.1 PPU = 84 PEOPLE

TOTAL POPULATION TOWER 3 AND 4 = 426 PEOPLE

TOWER 5

115 - BACHELOR @ 1.4 PPU = 161 PEOPLE
112 - 1 BEDROOM APTS @ 1.4 PPU = 171 PEOPLE
50 - 2 BEDROOM APTS @ 2.1 PPU = 105 PEOPLE
6 - 3 BEDROOM APTS @ 3.1 PPU = 19 PEOPLE

TOTAL POPULATION TOWER 5 = 455 PEOPLE

TOWER 6

28 - BACHELOR @ 1.4 PPU = 39 PEOPLE
158 - 1 BEDROOM APTS @ 1.4 PPU = 221 PEOPLE
121 - 2 BEDROOM APTS @ 2.1 PPU = 254 PEOPLE
4 - 3 BEDROOM APTS @ 3.1 PPU = 12 PEOPLE

TOTAL POPULATION TOWER 6 = 527 PEOPLE

TOTAL POPULATION = 1408

TOTAL COMMERCIAL SPACE = 2181m² (0.2181ha) @ 28,000 L/ha/day

Revision		By	Appd.	YY.MM.DD
1	REVISED AS PER NEW SITE PLAN	MJS	RB	24.07.19
0	ISSUED FOR SPA	MJS	RB	23.05.25

File Name: 160401676 D8.dwg	MJS	RB	MJS	23.03.31
	Dwn.	Chkd.	Dsgn.	YY.MM.DD

Permit-Seal

LICENSED PROFESSIONAL ENGINEER
R. J. B. BRANDRICK
100570025
July 19 2024
PROVINCE OF ONTARIO

Client/Project
BRIGIL HOMES

BASELINE TOWERS 3-4-5-6
2946 BASELINE ROAD
OTTAWA, ON, CANADA

Title
SANITARY DRAINAGE PLAN

Project No.	Scale	
160401676	1:400 (0 4 12 20m)	
Drawing No.	Sheet	Revision
SA-1	7 of 7	1

V:\01-604\central\160401676\design\drawings\160401676 D8.dwg
2024/07/18 3:29 PM By: Sharp, Mike

ORIGINAL SHEET - ARCH D