GENERAL

1. DRAWINGS TO BE READ IN CONJUNCTION WITH ARCHITECTURAL AND LANDSCAPE DRAWINGS.
2. ALL SERVICES, MATERIALS, CONSTRUCTION METHODS AND INSTALLATIONS SHALL BE IN ACCORDANCE WITH THE LATEST STANDARDS AND REGULATIONS OF THE: CITY OF OTTAWA STANDARD SPECIFICATIONS AND DRAWINGS, ONTARIO PROVINCIAL SPECIFICATION STANDARD SPECIFICATION (OPSS) AND ONTARIO PROVINCIAL STANDARD DRAWINGS (OPSD), UNLESS OTHERWISE SPECIFIED, TO THE SATISFACTION OF THE CITY AND THE CONSULTANT.
3. THE POSITION OF EXISTING POLE LINES, CONDUITS, WATERMAINS, SEWERS AND OTHER UNDERGROUND AND ABOVEGROUND UTILITIES, STRUCTURES AND APPURTENANCES IS NOT NECESSARILY SHOWN ON THE CONTRACT DRAWING, AND WHERE SHOWN, THE ACCURACY OF THE POSITION OF SUCH UTILITIES AND STRUCTURES IS NOT GUARANTEED. PRIOR TO CONSTRUCTION, THE CONTRACTOR SHALL SATISFY HIMSELF OF THE EXACT LOCATION OF ALL SUCH UTILITIES AND STRUCTURES, AND SHALL ASSUME ALL LIABILITY FOR DAMAGE TO THEM DURING THE COURSE OF CONSTRUCTION. ANY RELOCATION OF EXISTING UTILITIES REQUIRED BY THE DEVELOPMENT OF SUBJECT LANDS IS TO BE UNDERTAKEN AT CONTRACTOR'S EXPENSE.
4. THE CONTRACTOR MUST NOTIFY ALL EXISTING UTILITY COMPANY OFFICIALS FIVE (5) BUSINESS DAYS PRIOR TO START OF CONSTRUCTION AND HAVE ALL EXISTING UTILITIES AND SERVICES LOCATED IN THE FIELD OR EXPOSED PRIOR TO THE START OF CONSTRUCTION, INCLUDING BUT NOT LIMITED TO HYDRO, BELL, CABLE TV, AND CONSUMERS GAS LINES.
5. ALL TRENCHING AND EXCAVATIONS TO BE IN ACCORDANCE WITH THE LATEST REVISIONS OF THE OCCUPATIONAL HEALTH AND SAFETY ACT AND REGULATIONS FOR CONSTRUCTION PROJECTS. ALL INFORMATION SHALL BE CONFIRMED PRIOR TO COMMENCEMENT OF CONSTRUCTION.
6. REFER TO ARCHITECTS PLANS FOR BUILDING DIMENSIONS, ELEVATIONS, LAYOUT AND REMOVALS. REFER TO LANDSCAPE PLAN FOR LANDSCAPED DETAILS AND OTHER RELEVANT INFORMATION. ALL INFORMATION SHALL BE CONFIRMED PRIOR TO COMMENCEMENT OF CONSTRUCTION.
7. TOPOGRAPHIC SURVEY COMPLETED AND PROVIDED BY FARLEY, SMITH AND DENIS SURVEYING LTD., DATED DECEMBER 9, 2022. CONTRACTOR TO VERIFY IN THE FIELD PRIOR TO CONSTRUCTION OF ANY WORK AND NOTIFY THE ENGINEER OF ANY DISCREPANCIES.
8. ALL ELEVATIONS ARE GEODETIC AND UTILIZE METRIC UNITS. VERIFY THAT JOB BENCHMARKS HAVE NOT BEEN ALTERED OR DISTURBED.
9. ALL GROUND SURFACES SHALL BE EVENLY GRADED WITHOUT PONDING AREAS AND WITHOUT LOW POINTS EXCEPT WHERE APPROVED SWALE OR DRAIN OUTLETS ARE PROVIDED.
10. ALL EDGES OF DISTURBED PAVEMENT SHALL BE SAW CUT TO FORM A NEAT AND STRAIGHT LINE PRIOR TO PLACING NEW PAVEMENT. PAVEMENT REINSTATEMENT SHALL BE WITH STEP JOINTS OF 500mm WIDTH MINIMUM.
11. ALL DISTURBED AREAS OUTSIDE PROPOSED GRADING LIMITS TO BE RESTORED TO ORIGINAL ELEVATIONS AND CONDITIONS UNLESS OTHERWISE SPECIFIED. EXISTING PARKING LOT SHALL BE RE-ASPHALTED AT EXISTING GRADES EXCEPT AS NOTED TO EVEN OUT GRADES. ALL RESTORATION SHALL BE COMPLETED WITH THE GEOTECHNICAL REQUIREMENTS FOR BACKFILL AND COMPACTION.
12. ABUTTING PROPERTY GRADES TO BE MATCHED.
13. CONTRACTOR SHALL OBTAIN AND PAY FOR ALL NECESSARY PERMITS AND APPROVALS FROM THE MUNICIPAL AUTHORITIES PRIOR TO COMMENCING CONSTRUCTION, INCLUDING WATER PERMIT AND ROAD CUT PERMIT.
14. MINIMIZE DISTURBANCE TO EXISTING VEGETATION DURING THE EXECUTION OF ALL WORKS.
15. REMOVE FROM SITE ALL EXCESS EXCAVATED MATERIAL UNLESS OTHERWISE DIRECTED FROM THE ENGINEER. EXCAVATE AND REMOVE ALL ORGANIC MATERIAL AND DEBRIS LOCATED WITHIN THE PROPOSED BUILDING, PARKING AND ROADWAY LOCATIONS.
16. AT PROPOSED UTILITY CONNECTION POINTS AND CROSSINGS (I.E. STORM SEWER, SANITARY SEWER, WATER, ETC.) THE CONTRACTOR SHALL DETERMINE THE PRECISE LOCATION AND DEPTH OF EXISTING UTILITIES AND REPORT ANY DISCREPANCIES OR CONFLICTS TO THE ENGINEER BEFORE COMMENCING WORK.
17. PRIOR TO CONSTRUCTION, A GEOTECHNICAL ENGINEER REGISTERED IN THE PROVINCE OF ONTARIO IS TO INSPECT ALL SUB-SURFACES FOR FOOTINGS, SERVICES AND PAVEMENT STRUCTURES.
18. CONTRACTOR TO OBTAIN POST-CONSTRUCTION TOPOGRAPHIC SURVEY PERFORMED BY CERTIFIED OLS OR P.ENG. CONFIRMING COMPLIANCE WITH DESIGN GRADING AND SERVICING. SURVEY IS TO INCLUDE LOCATION AND INVERTS FOR BURIED UTILITIES.
19. PROVIDE CCTV INSPECTION REPORT FOR ALL SEWERS AND CATCHBASIN LEADS 200MM DIAMETER AND LARGER. REPEAT CCTV INSPECTION FOLLOWING RECTIFICATION OF ANY DEFICIENCIES.
20. REPORT REFERENCES
    - 20.1. PRELIMINARY GEOTECHNICAL INVESTIGATION - PROPOSED MULTI-STOREY BUILDING: 451 SMYTH ROAD, OTTAWA, ONTARIO, PREPARED BY ARCADIS CANADA INC., REF NO. 30054299-G, MARCH 11, 2021.
    - 20.2. GEOTECHNICAL INVESTIGATION - PROPOSED INSTITUTIONAL BUILDING, 451 SMYTH ROAD , OTTAWA, ONTARIO, PREPARED BY PATERSON GROUP, (DRAFT), REPORT PG6804-1, OCTOBER 20, 2023

PARKING LOT AND WORK IN PUBLIC RIGHTS OF WAY

1. CONTRACTOR TO REINSTATE ROAD CUTS AS PER CITY OF OTTAWA DETAIL R10.
2. CONTRACTOR TO PREPARE SUBGRADE, INCLUDING PROOFROLLING, TO THE SATISFACTION OF THE GEOTECHNICAL CONSULTANT PRIOR TO THE COMMENCEMENT OF PLACEMENT OF GRANULAR B MATERIAL.
3. FILL TO BE PLACED AND COMPACTED PER THE GEOTECHNICAL REPORT REQUIREMENTS.
4. CONTRACTOR TO SUPPLY, PLACE AND COMPACT GRANULAR B MATERIAL IN ACCORDANCE WITH THE RECOMMENDATIONS OF THE GEOTECHNICAL CONSULTANT. CONTRACTOR TO PROVIDE CONSULTANT WITH SAMPLES OF GRANULAR B MATERIAL FOR TESTING AND CERTIFICATION FROM THE GEOTECHNICAL CONSULTANT THAT THE MATERIAL MEETS THE GRADATION REQUIREMENTS SPECIFIED IN THE GEOTECHNICAL REPORT.
5. GRANULAR A MATERIAL TO BE PLACED ONLY UPON APPROVAL BY THE GEOTECHNICAL CONSULTANT OF GRANULAR B PLACEMENT.
6. CONTRACTOR TO SUPPLY, PLACE AND COMPACT GRANULAR A MATERIAL IN ACCORDANCE WITH THE RECOMMENDATIONS OF THE GEOTECHNICAL CONSULTANT. CONTRACTOR TO PROVIDE CONSULTANT WITH SAMPLES OF GRANULAR A MATERIAL FOR TESTING AND CERTIFICATION FROM THE GEOTECHNICAL CONSULTANT THAT THE MATERIAL MEETS THE GRADATION REQUIREMENTS SPECIFIED IN THE GEOTECHNICAL REPORT.
7. ASPHALT MATERIAL TO BE PLACED ONLY UPON APPROVAL BY THE GEOTECHNICAL CONSULTANT OF GRANULAR A PLACEMENT.
8. CONTRACTOR TO SUPPLY, PLACE AND COMPACT ASPHALT MATERIAL IN ACCORDANCE WITH THE RECOMMENDATIONS OF THE GEOTECHNICAL CONSULTANT. CONTRACTOR TO PROVIDE CONSULTANT WITH SAMPLES OF ASPHALT MATERIAL FOR TESTING AND CERTIFICATION FROM THE GEOTECHNICAL CONSULTANT THAT THE MATERIAL MEETS THE REQUIREMENTS SPECIFIED IN THE GEOTECHNICAL REPORT.
9. CONTRACTOR IS RESPONSIBLE FOR ESTABLISHING LINE AND GRADE IN ACCORDANCE WITH THE PLANS, AND FOR PROVIDING THE CONSULTANT WITH VERIFICATION PRIOR TO PLACEMENT.
10. ALL EXCESS MATERIAL TO BE HAULED OFFSITE AND DISPOSED OF AT AN APPROVED DUMP SITE. SHOULD THE CONTRACTOR DISCOVER ANY HAZARDOUS MATERIAL, CONTRACTOR IS TO NOTIFY CONSULTANT. CONSULTANT TO DETERMINE APPROPRIATE DISPOSAL METHOD/LOCATION.
11. PAVEMENT STRUCTURE (MATERIAL TYPES AND THICKNESS) TO BE AS SPECIFIED IN THE GEOTECHNICAL REPORT.

STORM SEWERS AND STRUCTURES

1. ALL STORM SEWER MATERIALS AND CONSTRUCTION METHODS SHALL CONFORM TO THE CURRENT CITY OF OTTAWA STANDARDS AND SPECIFICATIONS. PROVIDE CCTV INSPECTION REPORTS FOR ALL NEW STORM SEWERS, SERVICES AND CB LEADS.
2. STORM SEWERS 450mm DIAMETER AND SMALLER SHALL BE PVC SDR-35, WITH RUBBER GASKET PER CSA A-257.3 UNLESS OTHERWISE NOTED.
3. STORM SEWER LARGER THAN 450mm SHALL BE REINFORCED CONCRETE CLASS 100D.
4. SEWER BEDDING AS PER CITY OF OTTAWA DETAIL S6.
5. ALL STORM MANHOLES TO BE AS PER STORM STRUCTURE TABLE.
6. ANY NEW OR EXISTING STORM SEWER WITH LESS THAN 2.0m COVER REQUIRES THERMAL INSULATION AS PER CITY OF OTTAWA STANDARD W22, OR APPROVED BY THE ENGINEER.
7. ALL CATCHBASIN LEADS TO BE MINIMUM 200mm DIAMETER AT MINIMUM 1.0% SLOPE UNLESS OTHERWISE SPECIFIED.
8. STORM CATCHBASINS AS PER OPSD 705.010 AND FRAME/COVER AS PER CITY STANDARD DRAWINGS S19. STORM CBMH'S AS INDICATED IN TABLE WITH SUMP, ADJUSTMENT SECTIONS SHALL BE AS PER OPSD 704.010. ALL CATCHBASINS EXCLUDING LANDSCAPING CATCHBASINS TO HAVE 150mm Ø PERFORATED PIPE FOR 3m ON ALL AVAILABLE SIDES AT AN ELEVATION OF 300mm BELOW SUBGRADE LEVEL AS PER CITY OF OTTAWA STANDARD DRAWING 'R1'
9. INSTALLATION OF FLOW CONTROL ICD'S TO BE VERIFIED BY QUALITY VERIFICATION ENGINEER RETAINED BY CONTRACTOR.
10. PROVIDE BACKWATER VALVE ON FOUNDATION DRAIN, STORM DISCHARGE, AND OVERFLOW DISCHARGE PER S14.
11. WHERE SEWER INSTALLATIONS ARE PARALLEL TO WATERMAIN WITH LESS THAN 2.5m SEPARATION, SEWERS SHALL BE PVC SDR-18 OR APPROVED EQUIVALENT MEETING MOE F-6-1.
12. ALL CATCHBASINS EXCLUDING LANDSCAPE CATCHBASINS TO HAVE 150mm Ø PERFORATED PIPE FOR 3.0m ON ALL AVAILABLE SIDES AT AN ELEVATION OF 300mm BELOW SUBGRADE LEVEL AS PER CITY OF OTTAWA STANDARD DRAWING 'R1'.

SANITARY SEWER AND STRUCTURES

1. ALL SANITARY SEWER, SANITARY SEWER APPURTENANCES AND CONSTRUCTION METHODS SHALL CONFORM TO THE CURRENT CITY OF OTTAWA STANDARDS AND SPECIFICATIONS. PROVIDE CCTV INSPECTION REPORTS FOR ALL NEW SANITARY PIPING.
2. SANITARY SEWER PIPE SIZE 150mm DIAMETER AND GREATER TO BE PVC SDR-35 (UNLESS SPECIFIED OTHERWISE) WITH RUBBER GASKET TYPE JOINTS IN CONFORMANCE WITH CSA B-182.2,3,4.
3. SEWER BEDDING AS PER CITY OF OTTAWA DETAIL S6.
4. ALL SANITARY MANHOLES 1200mm IN DIAMETER TO BE AS PER OPSD 701.01. FRAME AND COVER TO BE AS PER CITY OF OTTAWA STANDARD S25 AND S24.
5. MAINTENANCE HOLE BENCHING AND PIPE OPENING ALTERNATIVES AS PER THE OPSD 701.021
6. ANY SANITARY SEWER WITH LESS THAN 2.0m COVER REQUIRES THERMAL INSULATION AS PER CITY OF OTTAWA STANDARD W22, OR APPROVED BY THE ENGINEER.
7. PROVIDE BACKWATER VALVE FOR BUILDING SANITARY SERVICES PER S14.1
11. WHERE SEWER INSTALLATIONS ARE PARALLEL TO WATERMAIN WITH LESS THAN 2.5m SEPARATION, SEWERS SHALL BE PVC SDR-18 OR APPROVED EQUIVALENT MEETING MOE F-6-1.

WATERMAIN

1. ALL WATERMAIN AND WATERMAIN APPURTENANCES, MATERIALS, CONSTRUCTION AND TESTING METHODS SHALL CONFORM TO THE CURRENT CITY OF OTTAWA AND MINISTRY OF ENVIRONMENT STANDARDS AND SPECIFICATIONS.
2. ALL WATERMAIN 300mm DIAMETER AND SMALLER TO BE POLY VINYL CHLORIDE (PVC) CLASS 150 DR 18 MEETING AWWA SPECIFICATION C900.
3. ALL WATERMAIN TO BE INSTALLED AT MINIMUM COVER OF 2.4m BELOW FINISHED GRADE. WHERE WATERMAINS CROSS OVER OTHER UTILITIES, A MINIMUM 0.30m CLEARANCE SHALL BE MAINTAINED; WHERE WATERMAINS CROSS UNDER OTHER UTILITIES, A MINIMUM 0.50m CLEARANCE SHALL BE MAINTAINED. WHERE THE MINIMUM SEPARATION CANNOT BE ACHIEVED, THE WATERMAIN SHALL BE INSTALLED AS PER CITY OF OTTAWA STANDARDS W25 AND W25.2. WHERE 2.4m MINIMUM DEPTH CANNOT BE ACHIEVED, THERMAL INSULATION SHALL BE PROVIDED AS PER CITY OF OTTAWA STANDARD W22. WHERE A WATERMAIN IS IN CLOSE PROXIMITY TO AN OPEN STRUCTURE, THERMAL INSULATION SHALL BE PROVIDED AS PER CITY OF OTTAWA STANDARD W23.
4. CONCRETE THRUST BLOCKS AND MECHANICAL RESTRAINTS ARE TO BE INSTALLED AT ALL TEES, BENDS, HYDRANTS, REDUCERS, ENDS OF MAINS AND CONNECTIONS 100mm AND LARGER, IN ACCORDANCE WITH CITY OF OTTAWA STANDARDS W25.3 & W25.4.
5. CATHODIC PROTECTION REQUIRED FOR ALL IRON FITTINGS AS PER CITY OF OTTAWA STANDARD W40 & W42.
6. ALL VALVES AND VALVE BOXES AND CHAMBERS, HYDRANTS, AND HYDRANT VALVES AND ASSEMBLES SHALL BE INSTALLED AS PER CITY OF OTTAWA STANDARD
7. FIRE HYDRANT LOCATION AND INSTALLATION AS PER CITY OF OTTAWA STANDARD W18 & W19. CONTRACTOR TO PROVIDE FLOW TEST AND PAINTING OF NEW HYDRANT IN ACCORDANCE WITH CITY STANDARDS.
8. IF WATER MAIN MUST BE DEFLECTED TO MEET ALIGNMENT, ENSURE THAT THE AMOUNT OF DEFLECTION USED IS LESS THAN HALF THAT RECOMMENDED BY THE MANUFACTURER.

EROSION AND SEDIMENT CONTROL

** CONTRACTOR IS RESPONSIBLE FOR ALL INSTALLATION, MONITORING, REPAIR AND REMOVAL OF ALL EROSION AND SEDIMENT CONTROL FEATURES. **

1. PRIOR TO START OF CONSTRUCTION:
   - 1.1. INSTALL SILT FENCE IN LOCATION SHOWN.
   - 1.2. INSTALL FILTER FABRIC OR SILT SACK FILTERS IN ALL THE CATCHBASINS AND MANHOLES TO REMAIN DURING CONSTRUCTION WITHIN THE SITE.
   - 1.3. INSPECT MEASURES IMMEDIATELY AFTER INSTALLATION.
   - 1.4. INSTALL MUD MAT AT CONSTRUCTION ENTRANCES.
2. DURING CONSTRUCTION:
   - 2.1. MINIMIZE THE EXTENT OF DISTURBED AREAS AND THE DURATION OF EXPOSURE AND IMPACTS TO EXISTING GRADING.
   - 2.2. PERIMETER VEGETATION TO REMAIN IN PLACE UNTIL PERMANENT STORM WATER MANAGEMENT IS IN PLACE. OTHERWISE, IMMEDIATELY INSTALL SILT FENCE WHEN THE EXISTING SITE IS DISTURBED AT THE PERIMETER.
   - 2.3. PROTECT DISTURBED AREAS FROM OVERLAND FLOW BY PROVIDING TEMPORARY SWALES TO THE SATISFACTION OF THE FIELD ENGINEER. TIE-IN TEMPORARY SWALE TO EXISTING CB'S AS REQUIRED.
   - 2.4. PROVIDE TEMPORARY COVER SUCH AS SEEDING OR MULCHING IF DISTURBED AREA WILL NOT BE REHABILITATED WITHIN 30 DAYS.
   - 2.5. INSPECT SILT FENCES, FILTER FABRIC FILTERS AND CATCH BASIN SUMPS WEEKLY AND WITHIN 24 HOURS AFTER A STORM EVENT. CLEAN AND REPAIR WHEN NECESSARY.
   - 2.6. DOWNSTREAM STORM INFRASTRUCTURE SHALL BE PROTECTED FROM UNFILTERED RUNOFF DURING ON-SITE STORM INFRASTRUCTURE DEMOLITION.
   - 2.7. DRAWING TO BE REVIEWED AND REVISED AS REQUIRED DURING CONSTRUCTION.
   - 2.8. EROSION CONTROL FENCING TO BE ALSO INSTALLED AROUND THE BASE OF ALL STOCKPILES.
   - 2.9. DO NOT LOCATE TOPSOIL PILES AND EXCAVATION MATERIAL CLOSER THAN 2.5m FROM ANY PAVED SURFACE, OR ONE WHICH IS TO BE PAVED BEFORE THE PILE IS REMOVED. ALL TOPSOIL PILES ARE TO BE SEEDED IF THEY ARE TO REMAIN ON SITE LONG ENOUGH FOR SEEDS TO GROW (LONGER THAN 30 DAYS).
   - 2.10. CONTROL WIND-BLOWN DUST OFF SITE BY SEEDING TOPSOIL PILES AND OTHER AREAS TEMPORARILY (PROVIDE WATERING AS REQUIRED AND TO THE SATISFACTION OF THE ENGINEER).
   - 2.11. NO ALTERNATE METHODS OF EROSION PROTECTION SHALL BE PERMITTED UNLESS APPROVED BY THE FIELD ENGINEER.
   - 2.12. CITY ROADWAY AND SIDEWALK TO BE CLEANED OF ALL SEDIMENT FROM VEHICULAR TRACKING AS REQUIRED.
   - 2.13. DURING WET CONDITIONS, TIRES OF ALL VEHICLES/EQUIPMENT LEAVING THE SITE ARE TO BE SCRAPED.
   - 2.14. ANY MUD/MATERIAL TRACKED ONTO THE ROAD SHALL BE REMOVED IMMEDIATELY BY HAND OR
   - 12. RUBBER TIRE LOADER.
   - 2.15. TAKE ALL NECESSARY STEPS TO PREVENT BUILDING MATERIAL, CONSTRUCTION DEBRIS OR WASTE BEING SPILLED OR TRACKED ONTO ABUTTING PROPERTIES OR PUBLIC STREETS DURING CONSTRUCTION AND PROCEED IMMEDIATELY TO CLEAN UP ANY AREAS SO AFFECTED.
   - 2.16. ALL EROSION CONTROL STRUCTURE TO REMAIN IN PLACE UNTIL ALL DISTURBED GROUND SURFACES HAVE BEEN STABILIZED EITHER BY PAVING OR RESTORATION OF VEGETATIVE GROUND COVER.
   - 2.17. THE CONTRACTOR SHALL IMPLEMENT BEST MANAGEMENT PRACTICES, TO PROVIDE FOR PROTECTION OF THE AREA DRAINAGE SYSTEM AND THE RECEIVING WATERCOURSE, DURING CONSTRUCTION ACTIVITIES. THE CONTRACTOR ACKNOWLEDGES THAT FAILURE TO IMPLEMENT APPROPRIATE EROSION AND SEDIMENT CONTROL MEASURES MAY BE SUBJECT TO PENALTIES IMPOSED BY ANY APPLICABLE REGULATORY AGENCY.

Typical Siltsack® Construction - Type B

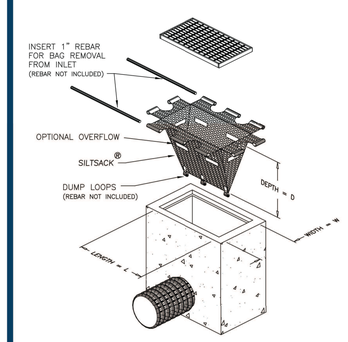

APPROVED
By Lily Xu at 9:01 am, May 14, 2024

LILY XU, MCIP, RPP
MANAGER, DEVELOPMENT REVIEW SOUTH
PLANNING, DEVELOPMENT, AND BUILDING SERVICES
DEPARTMENT, CITY OF OTTAWA

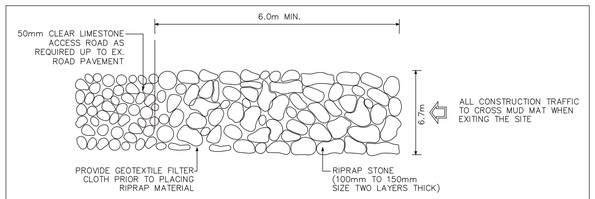

MUD MAT DETAIL - PLAN VIEW
(NTS)

Recommended Pavement Structure-Car Only Parking Areas

THICKNESS (mm)	MATERIAL DESCRIPTION
50	**Wear Course:** HL-3 of Superpave 12.5 Asphaltic Concrete
150	**Base:** OPSS Granular A Crushed Stone
300	**Subbase:** OPSS Granular B Type II
Subgrade: Either fill, in-situ soil or OPSS Granular B Type I or II material placed over in-situ soil or fill.	

Recommended Pavement Structure - Access Lanes and Heavy Truck Parking/Loading Areas

THICKNESS (mm)	MATERIAL DESCRIPTION
40	**Wear Course:** HL-3 of Superpave 12.5 Asphaltic Concrete
50	**Binder Course:** HL-8 or Superpave 19.0 Asphaltic Concrete
150	**Base:** OPSS Granular A Crushed Stone
400	**Subbase:** OPSS Granular B Type II
Subgrade: Either fill, in-situ soil or OPSS Granular B Type I or II material placed over in-situ soil or fill.	

DISCIPLINE/PROJECT DEFINED (eg LEGEND / KEY PLAN / LOGOS)

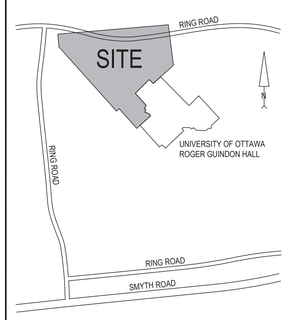

KEY PLAN
NTS

REVISION:

REV	DATE	DESCRIPTION	BY
7	2024-04-30	30% CONSTRUCTION DOCUMENT SUBMISSION	VT
6	2024-04-18	ISSUED FOR ZBLA AND SPC SUBMISSION	VT
5	2024-02-26	ISSUED FOR SITE PLAN APPROVAL	VT
4	2024-02-02	ISSUED FOR COORDINATION	VT
3	2023-11-30	ISSUED FOR SITE PLAN APPROVAL	VT
2	2023-11-20	ISSUED FOR BUILDING PERMIT	VT
1	2023-10-31	ISSUED FOR PRICING PROPOSAL	VT

SEAL: LICENSED PROFESSIONAL ENGINEER Y. TENG 100226367 2024-04-18 PROVINCE OF ONTARIO

NORTH:

DISCLAIMER: COPYRIGHT:
THIS DRAWING AND DESIGN IS COPYRIGHT PROTECTED WHICH SHALL NOT BE USED, REPRODUCED OR REVISED WITHOUT WRITTEN PERMISSION BY WSP. THE CONTRACTOR SHALL CHECK AND VERIFY ALL DIMENSIONS AND UTILITY LOCATIONS AND REPORT ALL ERRORS AND OMISSIONS PRIOR TO COMMENCING WORK.

ORIGINAL SCALE: AS NOTED
DATE: 2023-09-25
DESIGNED BY: V. TENG
DRAWN BY: B. NANDLAL
APPROVED BY: I. JAFFERJEE
IF THIS BAR IS NOT 25mm LONG, ADJUST YOUR PLOTTING SCALE. 25mm
DISCIPLINE: CIVIL

WSP CANADA INC.
2611 QUEENSVIEW DRIVE, SUITE 300
OTTAWA ONTARIO K2B 8K2 CANADA
WSP.COM

PROJECT NUMBER: CA0009956.0165-CA

CLIENT: uOttawa PCL

CLIENT REF. #:

PROJECT:
ADVANCED MEDICAL RESEARCH CENTRE

TITLE:
NOTES AND DETAILS

DRAWING NUMBER: C100
REV. 7

File No. D07-12-24-0021 Plan No. 19104

CTB: wsp_ottawa.ctb
PLOTTED: 2024-05-10 - 8:41 AM FILE: \\corp.pbwan.net\ca\ott\300\ott1da01\ws\ottawa_infrastructure\10-13 me 2023 projects\ca0009956.0165-ca-ottawa amc pursuit\14.0 tech_prof services\14.60_civil\3. drawing\working drawing\sheets\ca0009956.0165-ca_civil_amrc.dwg