Site Servicing and Stormwater Management Report 1136 Gabriel Street, Ottawa, ON

Client:
PulseSocieties Ltd
Suite 100, 135 Laurier Avenue W
Ottawa, ON K1P 5J2

Submitted for:
Site Plan Application (SPA)

Project Name:
1136 Gabriel Street

Project Number:
OTT-24006874-A0

Prepared By:
EXP
2650 Queensview Drive
Ottawa, ON K2B 8H8
t: +1.613.688.1899
f: +1.613.225.7337

Date Submitted:
August 1, 2024

EXP Services Inc.
1136 Gabriel Street, Ottawa, ON
OTT-24006874-A0
August 1, 2024

Site Servicing and Stormwater Management Report
1136 Gabriel Street, Ottawa, ON

Prepared by:

Alexander Johnson, B.Eng, E.I.T.
Engineering Designer
Infrastructure Services

Checked by:

Aaditya Jariwala, M.Eng, P.Eng
Project Manager
Infrastructure Services

Approved by:

Alam Ansari, M.Sc, P.Eng.
Director of Operations, Eastern Ontario
Infrastructure Services

Date Submitted:
August 1, 2024

Table of Contents

1 Introduction 1
1.1 Overview 1
2 Existing Conditions 2
2.1 Site Topography 2
3 Existing Infrastructure 2
4 Pre-Consultation / Permits / Approvals 2
4.1 Design Guidelines 3
5 Water Servicing 3
5.1 Water Servicing Design Criteria 3
5.2 Estimated Water Demands 4
5.3 Boundary Conditions 4
5.4 Fire Flow Requirements 5
5.5 Review of Hydrant Spacing 5
6 Sanitary Sewage Servicing 6
6.1 Sanitary Sewage Design Criteria 6
6.2 Proposed Sewage Conditions 7
6.3 Sanitary Servicing Review 7
7 Storm Servicing & Stormwater Management 7
7.1 Design Criteria 7
7.2 Runoff Coefficients 8
7.3 Pre-Development Conditions and Allowable Release Rate 8
7.4 Post Development Runoff 8
7.5 Flow Attenuation & Storage 9
7.6 Quality 10
8 Conclusions and Recommendations 11
9 Legal Notification 12
Appendix A – Figures ..... A
Appendix B – Water Servicing ..... B
Appendix C – Sanitary Demand Chart C
Appendix D – SWM Design Sheets ..... D

Appendix E – Correspondence ..... E

Appendix F – Drawings ..... F

Appendix G – ICD and Oil and Grit Seperator ..... G

List of Figures

Figure 1-1 - Site Location 1
Figure A1 – Site Location Plan ..... A
Figure A2 – Hydrant Location Plan ..... A

List of Tables

Table 5-1: Summary of Water Supply Design Criteria 3
Table 5-2: Residential Water Demand Summary 4
Table 6-1: Summary of Wastewater Design Criteria / Parameters 6
Table 6-2: Summary of Anticipated Sewage Rates 7
Table 7-1: The total pre-development storm runoff 8
Table 7-2: Summary of Post-Development Controlled and Uncontrolled flowrates 9
Table 7-3: Summary of Post-Development Storage and Release Rates 9
Table B1: Water Demand Chart ..... B
Table B2: Fire Flow Requirements Based on Fire Underwriters Survey (FUS) ..... B
Table B3: Estimated Water Pressure at Proposed Building FFE ..... B
Table C1: Sanitary Demand Chart C
Table D1: Calculation of Average Runoff Coefficients for Pre-Development Conditions ..... D
Table D2: Calculation of Catchment Time of Concentration for Pre-Development Conditions ..... D
Table D3: Calculation of Peak Runoff for Pre-Development Conditions (Allowable Release Rates) ..... D
Table D4: Average Runoff Coefficients for Post-Development Conditions ..... D
Table D5: Summary of Post-Development Peak Flows (Uncontrolled and Controlled) ..... D
Table D6: Summary of Post Development Storage & Release Rates ..... D
Table D7: Calculation of Available Surface Storage ..... D
Table D8: Calculation of Available Underground Pipe Storage ..... D
Table D9: Calculation of Underground Structure Storage ..... D
Table D10: Storage Volumes For 2-Year, 5-Year And 100-Year Storms (MRM) For Sub catchments S03, S04, S05 ..... D
Table D11: 5- 2-year, 5-year & 100-year Roof Drains Design Sheet - using Flow Controlled Roof Drains ..... D
Table D12: Storage Volumes for 2-year, 5-Year and 100-Year Storms (MRM) for Sub catchments S06-1, S06-2 ..... D
Table D13: 5-Year Storm Sewer Calculation Sheet ..... D

1 Introduction

1.1 Overview

EXP Services Inc. (EXP) was retained by PluseSocieties Limited to prepare a Site Servicing and Stormwater Management Report for the proposed development of 1136 Gabriel Street in support of Site Plan Application (SPA).

The site is situated on Gabriel Street Road, south of Highway 174 and west of Place d'Orleans Drive. The site is surrounded by Gabriel Street on the east, and residential dwellings to the north, south, and west as illustrated in **Figure 1-1** below. The site is within the City of Ottawa urban boundary and situated in Orléans East-Cumberland Ward (Ward 1).

Figure 1-1 - Site Location

The proposed development will consist of one (1) four (4) storey apartment building with a below grade basement. The proposed apartment building will consist of 20 units.

This report will discuss the adequacy of the adjacent municipal watermain, sanitary sewers and storm sewers to provide the required water supply, convey the sewage and stormwater flows that will result from the proposed development.

2 Existing Conditions

2.1 Site Topography

The site is currently occupied by a single-family residential unit. The site is bounded to the north, south, and west by single family residential units, and to the east by Gabriel Street. The topography of the site is roughly split with the front half sloping toward Gabriel Street at with minimal slopes. The rear half drains away from the rear of the house and towards the north side property line. Each side of the property ultimately drains towards Gabriel Street along property lines shared with adjacent properties.

3 Existing Infrastructure

From review of the sewer and watermain mapping, as-built drawings and the City's GeoOttawa mapping, the following summarizes the onsite and adjacent offsite infrastructure:

Within property

- None

Within Meadowbrook Road Right-of-way

- 152 mm – CI watermain and fire hydrant
- 250 mm – AC sanitary sewer
- 525 PVC storm sewer
- Gas main
- Overhead hydro lines and communication cables

  Refer to the survey plan prepared by Annis, O'Sullivan, Vollebekk Ltd., included in **Appendix F**.

4 Pre-Consultation / Permits / Approvals

A pre-consultation meeting was held with the City prior to design commencement. This meeting, held June 10, 2024, outlined the submission requirements and provided information to assist with the development proposal. Please refer to the email correspondence included in **Appendix E**.

Generally, an Environmental Compliance Approval (ECA) would be obtained from the Ministry of Environment, Conservation and Parks (MECP), formerly the Ministry of the Environment and Climate Change (MOECC), for any onsite private Sewage Works; however, an Approval Exemption under Ontario Regulation 525/98 can be applied. Under Section 3 of O'Reg 525/98, Section 53 (1) and (3) do not apply to the alteration, extension, replacement, or a change to a stormwater management facility that 1) is designed to service one lot or parcel of land, b) discharges into a storm sewer that is not a combined sewer, c) does not service industrial land or a structure located on industrial land, and finally d) is not located on industrial land. The onsite Sewage Works would generally include the onsite stormwater works such as flow controls, associated stormwater detention, and treatment works. Proposed stormwater management infrastructure complies with all of the above noted exemption requirements. Therefore, the proposed private stormwater management infrastructure would not require an ECA.

4.1 Design Guidelines

Various design guidelines were referred to in preparing the current report including:

- Bulletin ISDTB-2012-4 (20 June 2012)
    - Technical Bulletin ISDTB-2014-01 (05 February 2014)
    - Technical Bulletin PIEDTB-2016-01 (September 6, 2016)
    - Technical Bulletin ISDTB-2018-01 (21 March 2018)
    - Technical Bulletin ISDTB-2018-04 (27 June 2018)
- Ottawa Design Guidelines – Water Distribution, July 2010 (WDG001), including:
    - Technical Bulletin ISDTB-2014-02 (May 27, 2014)
    - Technical Bulletin ISTB-2018-02 (21 March 2018)
- Stormwater Management Planning and Design Manual, Ontario Ministry of the Environment and Climate Change, March 2003 (SMPDM).
- Design Guidelines for Drinking-Water Systems, Ontario Ministry of the Environment and Climate Change, 2008 (GDWS).
- Fire Underwriters Survey, Water Supply for Public Fire Protection (FUS), 2020.
- Ontario Building Code 2012, Ministry of Municipal Affairs and Housing.

5 Water Servicing

5.1 Water Servicing Design Criteria

Table 5-1 below summarizes the Design Criteria that was used to establish the water demands and the required fire flows, based on the proposed building uses. The design parameters that apply to this project and used for calculations are identified below.

Table 5-1: Summary of Water Supply Design Criteria

Design Parameter	Value	Applies
Population Density – Single-family Home	3.4 persons/unit	
Population Density – Semi-detached/Townhomes	2.7 persons/unit	
Population Density – Terrace Flat	1.8 persons/unit	
Population Density – Bachelor Apartment	1.4 persons/unit	✓
Population Density – Bachelor + Den Apartment	1.4 persons/unit	
Population Density – One Bedroom Apartment	1.4 persons/unit	✓
Population Density – One Bedroom plus Den Apartment	1.4 persons/unit	
Population Density – Two Bedroom Apartment	2.1 persons/unit	✓
Population Density – Two Bedroom plus Den Apartment	2.1 persons/unit	
Population Density – Three Bedroom Apartment	3.1 persons/unit	
Average Day Demands – Residential	280 L/person/day	✓

Average Day Demands – Commercial / Institutional	5 L/m^2 floor area/day	
Average Day Demands – Light Industrial / Heavy Industrial	35,000 or 55,000 L/gross ha/day	
Maximum Day Demands – Residential	Max day factor (MECP GDWS Table 3-3) x Average Day Demands	9.17
Maximum Day Demands – Commercial / Institutional	1.5 x Average Day Demands	
Peak Hour Demands – Residential	Peak Hour factor (MECP GDWS Table 3-3) x Average Day Demands	13.81
Peak Hour Demands – Commercial / Institutional	2.7 x Average Day Demands	
Fire Flow Requirements Calculation	FUS	✓
Depth of Cover Required	2.4m	✓
Maximum Allowable Pressure	551.6 kPa (80 psi)	✓
Minimum Allowable Pressure	275.8 kPa (40 psi)	✓
Minimum Allowable Pressure during fire flow conditions	137.9 kPa (20 psi)	✓

5.2 Estimated Water Demands

Table 5-2 below summarizes the anticipated water demands for the proposed development based on following:

- 1 four storey apartment building with basement. Estimated total residential population of 38.5 persons.

Table 5-2: Residential Water Demand Summary

Water Demand Conditions	20 unit apartment building water demands (L/sec)
Average Day	0.125
Max Day	1.145
Peak Hour	1.723

Refer to **Table B1** in **Appendix B** for detailed calculations.

5.3 Boundary Conditions

Hydraulic Grade Line (HGL) boundary conditions were obtained from the City for design purposes. A copy of the correspondence received from the City is provided in **Appendix E**.

The following hydraulic grade line (HGL) boundary conditions were provided:

Maximum HGL = 114.2 m (69.2 psi)

Peak Hour = 109.7 m (62.8 psi)

Max Day Plus Fire Flow = 96.0 m (43.4 psi)

Ground Elevation =65.5m

Pressure losses were calculated for the proposed 10-meter long 50mm diameter water service from the water main on Gabriel Street to the building finished floor elevation of 65.10m. The pressure drops for the average day, max day, and peak hour conditions was 0.6 psi, 0.8 psi, and 1.0 psi respectively. The existing 152mm watermain and proposed 50mm service connection are suitable for the proposed apartment buildings domestic water supply.

Refer to **Table B2** in **Appendix B** for detailed calculations

5.4 Fire Flow Requirements

The following equation from the Fire Underwriters document "Water Supply for Public Fire Protection", 2020, was used for calculation of the on-site supply rates required to be supplied by the hydrants:

$F = 200 * C * \sqrt{(A)}$

where:

F	=	Required Fire flow in Litres per minute
C	=	Coefficient related to type of Construction
A	=	Total Floor Area in square metres

Fire flow calculations were completed for the apartment building. The required fire flow was estimated at 116.7L/s (7,000 L/min).

Refer to **Table B2** in **Appendix B** for detailed calculations

As per the City of Ottawa water distribution guidelines, minimum pressure requirement during max day plus fire flow condition is 140 kPa (20 psi). The City provided a residual pressure for Max Day plus Fire flow of 43.4 psi. Therefore, the 152mm water supply on Gabriel Street is sufficient for the proposed development.

5.5 Review of Hydrant Spacing

A review of the hydrant spacing was completed to ensure compliance with Appendix I of Technical Bulletin ISTB-2018-02. As per Section 3 of Appendix I all hydrants within 150 meters were reviewed to assess the total possible contribution of flow from these hydrants. For each hydrant, the distance to the proposed building was determined to arrive at the contribution of fire flow. A review of the available fire hydrant within 150m distance along the fire route from the building was carried out which is summarized in the table below.

Hydrant #	Location	Color Code	City/Private	Distance from the Building (m)	Fire Flow Contribution for Class AA Hydrant (L/min)
380037H054	Rocque	Blue	City	130	3800
380037H056	Gabriel	Blue	City	10	5700
380037H057	St Joseph Blvd.	Blue	City	150	3800
Total					13,300

Please refer to Figure A2 in Appendix A for location of the above noted hydrants. As noted in the table above, there are 3 existing hydrants available within 150m from the building to access the required fire flow of 7000 L/min. The total fire flow contribution from existing hydrants is 13,300 L/min.

6 Sanitary Sewage Servicing

6.1 Sanitary Sewage Design Criteria

The sanitary sewer system is designed based on a population flow and an area-based infiltration allowance. The flows were calculated using City sewer design guidelines (SDG002). **Table 6-1** below summarizes the design parameters used.

Table 6-1: Summary of Wastewater Design Criteria / Parameters

Design Parameter	Value	Applies
Population Density – Single-family Home	3.4 persons/unit	
Population Density – Semi-detached Home	2.7 persons/unit	
Population Density – Duplex	2.3 persons/unit	
Population Density – Townhome (row)	2.7 persons/unit	
Population Density – Bachelor Apartment	1.4 persons/unit	✓
Population Density – Bachelor + Den Apartment	1.4 persons/unit	
Population Density – One Bedroom Apartment	1.4 persons/unit	✓
Population Density – One Bedroom plus Den Apartment	1.4 persons/unit	
Population Density – Two Bedroom Apartment	2.1 persons/unit	✓
Population Density – Two Bedroom plus Den Apartment	2.1 persons/unit	
Population Density – Three Bedroom Apartment	3.1 persons/unit	
Average Daily Residential Sewage Flow	280 L/person/day	✓
Average Daily Commercial / Intuitional Flow	28,000 L/gross ha/day	
Average Light / Heavy Industrial Daily Flow	35,000 / 55,000 L/gross ha/day	
Residential Peaking Factor – Harmon Formula (Min = 2.0, Max =4.0, with K=0.8)	$M = 1 + \frac{14}{4 + P^{0.5}} * k$	3.67
Commercial Peaking Factor	1.5	
Institutional Peaking Factor	1.5	

Industrial Peaking Factor	As per Table 4-B (SDG002)	
Unit of Peak Extraneous Flow (Total I/I)	0.33 L/s/gross ha	✓

6.2 Proposed Sewage Conditions

The estimated peak sanitary flow rate from the proposed property is **0.49 L/sec** based on City Design Guidelines. Sewage rates include a total infiltration allowance of 0.33 L/ha/sec based on the total gross site area. **Table 6-2** below summarizes the sewage anticipated peak sewage flows for the proposed site.

Table C1 in **Appendix C** summarizes the anticipated peak sewage flows from the proposed development up to the existing 250 mm diameter municipal sanitary sewer on Gabriel Street.

Table 6-2: Summary of Anticipated Sewage Rates

Sewage Condition	Sanitary Sewage Flow (L/sec)
Peak Residential Flow (for 38.5 persons)	0.458
Infiltration Flow (for 0.085 ha)	0.028
Peak Design Flow	0.486

6.3 Sanitary Servicing Review

There is a 250mm diameter municipal sanitary sewer on Gabriel Street. No capacity issue was identified during the pre-consultation meeting for the existing city sewer. The municipal sanitary sewer should therefore have sufficient residual capacity to convey the peak sanitary flow of 0.486 L/sec from the proposed development.

7 Storm Servicing & Stormwater Management

7.1 Design Criteria

The proposed stormwater management system is designed in conformance with the latest version of the City of Ottawa Design Guidelines (October 2012) Section 8 “Stormwater Management”. A summary of the design criteria that relates to this design report is the proceeding sections below.

- The storm sewer sizing will be based on the Rational Method and Manning’s Equation under free flow conditions for the 5-year storm using a 10-minute inlet time.
- Minimum sewer slopes to be based on minimum velocities for storm sewers of 0.80 m/sec.
- Post-development storm events shall be controlled to their respective pre-development storm event release rates. A pre-development runoff coefficient calculated based on existing land cover or a maximum equivalent ‘C’ of 0.5, whichever is less.
- Since the site is small, an alternative stormwater management option of overcontrolling roof area to a 2 year pre-development level with max C=0.5 while keeping the remaining site uncontrolled.
- Flows must be directed to the street.

7.2 Runoff Coefficients

Runoff coefficients used were based on actual areas taken from CAD. Runoff coefficients for impervious surfaces (roofs, asphalt, and concrete) were taken as 0.90, whereas those for pervious surfaces (grass/landscaping) were taken as 0.20. Gravel areas were considered as 0.75. The average runoff coefficients were calculated for the catchments (or drainage areas) using the area-weighting method in excel. C_{avg} for the site under pre-development conditions was 0.46 and under post-development conditions it is 0.76. The detailed calculations are included in **Table D1** and **Table D4** in **Appendix D**.

7.3 Pre-Development Conditions and Allowable Release Rate

In the pre-development conditions, the majority portion of the property drains towards the roadside ditch within the right of way of Gabriel Street. In the post development conditions, the stormwater runoff from the site will be controlled to pre-dev flows for up to and including 100-year storm as noted in the stormwater management criteria above. **Table 7-1** below summarizes the breakdown of the pre-development runoff from the site for the 2, 5, and 100-year storm respectively. **Table D3** in **Appendix D** provides detailed calculations on the total pre-development peak flows.

Therefore, the allowable release rateS under post-development conditions are summarized in the table below.

Table 7-1: The total pre-development storm runoff

Area No.	Area (ha)	Storm=2 Yr		Storm=5 Yr		Storm=100 Yr	
		C_{AVG}	Q (L/sec)	C_{AVG}	Q (L/sec)	C_{AVG}	Q (L/sec)
E1	*0.085*	*0.46*	*8.34*	*0.46*	*11.32*	*0.58*	*24.24*

7.4 Post Development Runoff

The 2-year, 5-year and 100-year post-development uncontrolled peak flows were calculated using Rational Method. Due to increased impervious areas under post-development conditions uncontrolled flows will exceed that of pre-development conditions.

To control post-development storm events to their respective pre-development storm event release rates, attenuation and storage will be provided in post-development catchment S06, corresponding to the roof of the building, and S03, S04 and S05 corresponding to surface ponding and storage in underground pipes and structures resulting from an inlet control device at CB 203. The remaining post development catchments will be uncontrolled and ultimately discharge into the roadside ditch within the right of way of Gabriel Street.

Post development controlled and uncontrolled flowrates are summarized in **Table 7-2** below. Detailed calculations are provided in **Table D5** of **Appendix D**.

Table 7-2: Summary of Post-Development Controlled and Uncontrolled flowrates

Area No.	Area (ha)	Storm=2 Yr			Storm=5 Yr			Storm=100 Yr		
		C_{AVG}	Q (L/sec)	Q_{CAP} (L/sec)	C_{AVG}	Q (L/sec)	Q_{CAP} (L/sec)	C_{AVG}	Q (L/sec)	Q_{CAP} (L/sec)
S01	0.0103	0.49	1.08	1.08	0.49	1.47	1.47	0.62	3.15	3.15
S02	0.0056	0.90	1.08	1.08	0.90	1.46	1.46	1.00	2.78	2.78
S03	0.0208	0.90	3.99		0.90	5.41		1.00	10.31	
S04	0.0103	0.31	0.68	**(2.25)**	0.31	0.92	**(3.06)**	0.39	1.98	**(6.00)**
S05	0.0053	0.53	0.60		0.53	0.81		0.66	1.74	
S06	0.0325	0.90	6.25	**(1.55)**	0.90	8.48	**(1.65)**	1.00	16.15	**(1.88)**
Totals	***0.0848***		***13.682***	***5.969***		***18.562***	***7.638***		***36.107***	***13.816***

The controlled peak flowrates for the post development site are 5.969L/s, 7.638 L/s, and 13.816L/s for the 2, 5, and 100 years storm events, respectively. Which are less than the pre-development flowrates of 8.342 L/s, 11.317 L/s and 24.24 L/s, respectively.

7.5 Flow Attenuation & Storage

As previously mentioned, flow attenuation and storage will be provided on the roof of the apartment building. The approximate roof area is 325m2. It was assumed that 75 percent of the available roof area could accommodate maximum ponding of 0.15m and that two roof drains should be used. The two roof drain areas are denoted by S06-1 and S06-2 respectively. Based on an iterative approach to achieve the allowable release rates, the roof drains were chosen to be Watts Accutrol roof drains with 1 weir set to the ¼ open position. Flow attenuation and storage was also provided in catchment S03 by way of surface ponding resulting from an inlet control device at CB 203. **Table 7-3** below provides a summary of the maximum release rates and required storage for drainage areas.

Table 7-3: Summary of Post-Development Storage and Release Rates

Area No.	Area (ha)	Max. Release Rate (L/sec)			Storage Required (m^3)		
		2-Yr	5-Yr	100-Yr	2-Yr	5-Yr	100-Yr
S01	0.0103	1.08	1.47	3.15			
S02	0.0056	1.08	1.46	2.78			
S03	0.0208						
S04	0.0103	**(2.25)**	**(3.06)**	**(6.00)**	1.8	2.5	5.6
S05	0.0053						
S06	0.0325	**(1.55)**	**(1.65)**	**(1.88)**	3.2	5.0	11.8
Totals	***0.0848***	***5.97***	***7.64***	***13.82***	***5.0***	***7.4***	***17.4***

Table D6 in **Appendix D** provides details of the controlled release rates and required storage volumes for each storm events. **Table D7** through **Table D8** in **Appendix D** details available storage volume calculation for catchment S03. **Table D8** in **Appendix D** details required storage volume calculation for catchment S03. **Table D8** in **Appendix D** details the Roof Drain Design worksheet. **Table D8** in **Appendix D** details required storage volume calculation for roof catchment S06.

7.6 Quality

Stormwater runoff from catchments S02, S03, S04, and S05 will be treated in an oil and grit separator located within the property. The oil and grit separator will be Stormceptor EF4 or approved equivalent. The oil and grit separator will discharge treated stormwater runoff to the intermediate STMMH 101 before discharging to the 525mm municipal storm sewer. Catchments S01, and S06 are not expected to produce significantly contaminated runoff and will not be treated in the oil and grit separator. quality control criteria for the subject development was set to provide 80% TSS removal. However, due to the type of development and site constraints, an Oil Grit Separator unit was sized as per new Canada PTV particle size distribution to provide a max. 70% TSS removal.

8 Conclusions and Recommendations

- Peak sanitary flows from the proposed development are expected to be 0.45 L/s which represents an estimated 0.82% of the capacity of the existing 250mm municipal sanitary sewer on Gabriel Street.
- The 152 mm diameter municipal watermain on Gabriel Street has sufficient capacity and pressure to meet the domestic and fire flow demands of the proposed development.
- Stormwater runoff from the site will be restricted from the roof and asphalt laneway to ensure that peak post development stormwater runoff rates remain below that of pre-development conditions for up to and including the 100-year storm event. The remainder of the site will flow uncontrolled to the 525mm municipal storm sewer on Gabriel Street. Stormwater runoff originating from the asphalt laneway will be treated in an oil and grit separator to achieve an enhanced level of quality treatment corresponding to 70% removal of suspended solids.

9 Legal Notification

This report was prepared by EXP Services Inc. for the account of PulseSocieties Ltd.

Any use which a third party makes of this report, or any reliance on or decisions to be made based on it, are the responsibility of such third parties. EXP Services Inc. accepts no responsibility for damages, if any, suffered by any third party as a result of decisions made or actions based on this project.

Appendix A – Figures

Figure A1 – Site Location Plan

Figure A2 – Hydrant Location Plan

FIGURE A1: Site Location Plan

FIGURE A2: HYDRANT LOCATION PLAN

Appendix B – Water Servicing

Table B1: Water Demand Chart

Table B2: Fire Flow Requirements Based on Fire Underwriters Survey (FUS)

Table B3: Estimated Water Pressure at Proposed Building FFE

TABLE B-1: Water Demand Chart

Location: 1136 Gabriel Street
Project No: OTT-24006874-A0
Designed by: A. Johnson
Checked By: A. Jariwala
Date Revised: July 2024

Water Consumption

Residential = **280** L/cap/day
Commercial = 5.0 L/m^2/day

Population Densities

Single Family	3.4	person/unit
Semi-Detahced	2.7	person/unit
Duplex	2.3	person/unit
Townhome (Row)	2.7	person/unit
Bachelor Apartment	1.4	person/unit
1 Bedroom Apartment	1.4	person/unit
2 Bedroom Apartment	2.1	person/unit
3 Bedroom Apartment	3.1	person/unit
4 Bedroom Apartment	4.1	person/unit
Avg. Apartment	1.8	person/unit

Proposed Buildings	No. of Residential Units										Total Persons (pop)	Residential Demands in (L/sec)					Commercial						Total Demands (L/sec)		
	Singles/Semis/Towns				Apartments								Peaking Factors (x Avg Day)						Peaking Factors (x Avg Day)						
	Single Family	Semi-Detached	Duplex	Townhome	Studio	1 Bedroom	2 Bedroom	3 Bedroom	4 Bedroom	Avg Apt.		Avg. Day Demand (L/day)	Max Day	Peak Hour	Max Day Demand (L/day)	Peak Hour Demand (L/day)	Area (m^2)	Avg Demand (L/day)	Max Day	Peak Hour	Max Day Demand (L/day)	Peak Hour Demand (L/day)	Avg Day (L/s)	Max Day (L/s)	Max Hour (L/s)
Appartment Building					4	1	15				38.5	10,780	9.17	13.81	98,898	148,885							0.125	1.145	1.723
Total =					4	1	15				38.5	10,780			98,898	148,885							0.12	1.14	1.72

PEAKING FACTORS FROM MOECC TABLE 3-3 (Peaking Factors for Water Systems Servicing Fewer Than 500 persons)

Dwelling Units Serviced	Equiv Pop	Night Min Factor	Maximum Day Factor	Peak Hour Factor
10	30	0.10	9.50	14.30
50	150	0.10	4.90	7.40
100	300	0.20	3.60	5.40
150	450	0.30	3.00	4.50
167	500	0.40	2.90	4.30

TABLE B2: FIRE FLOW REQURIEMENTS BASED ON FIRE UNDERWRITERS SURVEY(FUS) 2020
PROJECT: OTT-24006874-A0
Building: **1136 Gabriel Street**

An estimate of the Fire Flow required for a given fire area may be estimated by:

F = 220 * C * SQRT(A)

where: F = required fire flow in litres per minute
A = total floor area in m^2 (including all storeys, but excluding basements at least 50% below grade)
C = coefficient related to the type of construction

Task	Options	Multiplier	Input	Value Used	Fire Flow Total (L/min)
Choose Building Frame (C)	Wood Frame	1.5	Non-combustible Construction	0.8	
	Ordinary Construction	1			
	Non-combustible Construction	0.8			
	Fire Resistive Construction	0.6			
	Fourth Floor		335	1340.0 m²	
	Third Floor		335		
	Second Floor		335		
	First Floor		335		
	Basement (At least 50% below grade, not included)		335		
Fire Flow (F)	F = 220 * C * SQRT(A)				6,443
Fire Flow (F)	Rounded to nearest 1,000				**6,000**

Reductions/Increases Due to Factors Effecting Burning

Task	Options	Multiplier	Input	Value Used	Fire Flow Change (L/min)	Fire Flow Total (L/min)
Choose Combustibility of Building Contents	Non-combustible	-25%	Limited Combustible	-15%	-900	5,100
	Limited Combustible	-15%				
	Combustible	0%				
	Free Burning	15%				
	Rapid Burning	25%				
Choose Reduction Due to Sprinkler System	**Adequate** Sprinkler Conforms to NFPA13	-30%	No Sprinkler	0%	0	5,100
	No Sprinkler	0%				
	Standard Water Supply for Fire Department Hose Line and for Sprinkler System	-10%	Not Standard Water Supply or Unavailable	0%	0	5,100
	Not Standard Water Supply or Unavailable	0%				
	Fully Supervised Sprinkler System	-10%	Not Fully Supervised or N/A	0%	0	5,100
	Not Fully Supervised or N/A	0%				

Choose Structure Exposure Distance	Exposures	Separation Dist (m)	Cond	Separation Conditon	Exposed Wall type	Exposed Wall Length: Length (m)	No of Storeys	Length-Height Factor	Sub-Conditon	Charge (%)	Total Charge (%)	Total Exposure Charge (L/min)	
	West	6.61	2	3.1 to 10	Type V	7.37	1	7.37	2A	15%	31%	1,581	6,681
	East	4.69	2	3.1 to 10	Type V	11.38	2	22.76	2B	16%			
	South	32.87	5	30.1 to 45	Type V	14.87	2	29.74	6	0%			
	North	39.05	5	30.1 to 45	Type V	30.42	1	30.42	6	0%			

Obtain Required Fire Flow		
	Total Required Fire Flow, Rounded to the Nearest 1,000 L/min =	**7,000**
	Total Required Fire Flow, L/s =	**116.7**

Exposure Charges for Exposing Walls of Wood Frame Construciton (from Table G5)

Type V	Wood Frame
Type IV-III (U)	Mass Timber or Ordinary with Unprotected Openings
Type IV-III (P)	Mass Timber or Ordinary with Protected Openings
Type II-I (U)	Noncombustible or Fire Resistive with Unprotected Openings
Type II-I (P)	Noncombustible or Fire Resistive with Protected Openings

Conditons for Separation

Separation Dist	Condition
0m to 3m	1
3.1m to 10m	2
10.1m to 20m	3
20.1m to 30m	4
> 30.1m	5

TABLE B3

ESTIMATED WATER PRESSURE AT PROPOSED BUILDING FFE

Description	From	To	Demand (L/sec)	Pipe Length (m)	Pipe Dia (mm)	Dia (m)	Q (m3/sec)	Area (m2)	C	Vel (m/s)	Slope of HGL (m/m)	Head Loss (m)	Elev From (m)	Elev To (m)	*Elev Diff (m)	Pressure From kPa	(psi)	Pressure To kPa	(psi)	Pressure Drop (psi)
Avg Day Conditons																				
Single 50mm water service	Main	Building	0.12	10 m	50	0.050	0.0001	0.001963	110	0.0635	0.00023	0.0023	64.70	65.10	-0.4	485.6	(70.4)	481.6	(69.9)	0.6
Max Day Conditons																				
Single 50mm watermain	Main	Building	1.14	10 m	50	0.050	0.0011	0.001963	110	0.583	0.01368	0.1368	64.70	65.10	-0.4	441.5	(64.0)	436.2	(63.3)	0.8
Peak Hour Conditons																				
Single 50mm watermain	Main	Building	1.72	10 m	50	0.050	0.0017	0.001963	110	0.8776	0.02918	0.2918	64.70	65.10	-0.4	441.5	(64.0)	434.7	(63.0)	1.0

Water Demand Info

Average Demand =	0.12	L/sec
Max Day Demand =	1.14	L/sec
Peak Hr Deamand =	1.72	L/sec
Fireflow Requriement =	116.7	L/sec
Max Day Plus FF Demand =	117.8	L/sec

Pipe Lengths

From watermain to building =	10 m
Hazen Williams C Factor for Friction Loss in Pipe, C=	110

Boundary Conditon

	Min HGL	Max HGL	Max Day + Fireflow
HGL (m)	109.7	114.2	96.0
Approx Ground Elev (m) =	64.70	64.70	64.70
Approx Bldg FF Elev (m) =	65.10	65.10	65.10
Pressure (m) =	45	49.5	31.3
Pressure (Pa) =	441,450	485,595	307,053
Pressure (psi) =	64.0	70.4	44.5

(From City of Ottawa)

Appendix C – Sanitary Demand Chart

Table C1: Sanitary Demand Chart

TABLE C1 : SANITARY DEMAND CHART

LOCATION				RESEDENTIAL AREAS AND POPULAITONS												INFILTRATION		TOTAL	SEWER DATA						
					NUMBER OF UNITS							POPULATION				AREA (ha)									
Street	U/S MH	D/S MH	Desc	Area (ha)	Singles	Semis	Towns	1-Bed Apt.	2-Bed Apt.	3-Bed Apt.	4-Bed Apt.	INDIV	ACCU	Peak Factor	Peak Flow (L/sec)	INDIV	ACCU	FLOW (L/s)	Nom Dia (mm)	Actual Dia (mm)	Slope (%)	Length (m)	Capacity (L/sec)	Q/Q_{CAP} (%)	Full Velocity (m/s)
Gabriel	BLDG	SANMH 302		0.085				5	15			38.5	38.5	3.67	0.458	0.085	0.085	***0.486***	200	201.16	2.00	4.82	47.1	1.0%	1.7
	SANMH 302	SANMH 301																***0.49***	200	201.16	1.00	7.90	33.3	1.46%	1.2
	SANMH 301	EX SANMH																***0.49***	250	250.00	1.00	64.00	59.5	0.82%	1.2
				0.085				**5**				**39**				**0.085**									

Residential Avg. Daily Flow, q (L/p/day) =	280	Peak Population Flow, (L/sec) =	P*q*M/86.4	Unti Type	Persons/Unit
Residential Correction Factor, K =	0.80	Peak Extraneous Flow, (L/sec) =	I*Ac	Singles	3.0
Manning N =	0.013	Residential Peaking Factor, M =	1 + (14/(4+P^0.5)) * K	Semi-Detached	2.7
Peak extraneous flow, I (L/s/ha) =	0.33	A_c = Cumulative Area (hectares)		Townhomes	2.7
		P = Population (thousands)		Single Apt. Unit	1.4
				2-bed Apt. Unit	2.1
		Sewer Capacity, Qcap (L/sec) =	$1/N \; S^{1/2} R^{2/3} A_c$	3-bed Apt. Unit	3.1
		(Manning's Equation)		4-bed Apt. Unit	3.8

Designed:	Project:
A. Johnson B.Eng, EIT	OTT-24006874-A0
Checked:	Location:
A. Jariwala M.Eng, P.Eng	1136 Gabriel Street, Ottawa, Ontario
File Reference:	Page No:
24006874 - SAN - SAN Design Sheet.xlsx	**1 of 1**

Appendix D – SWM Design Sheets

Table D1: Calculation of Average Runoff Coefficients for Pre-Development Conditions

Table D2: Calculation of Catchment Time of Concentration for Pre-Development Conditions

Table D3: Calculation of Peak Runoff for Pre-Development Conditions (Allowable Release Rates)

Table D4: Average Runoff Coefficients for Post-Development Conditions

Table D5: Summary of Post-Development Peak Flows (Uncontrolled and Controlled)

Table D6: Summary of Post Development Storage & Release Rates

Table D7: Calculation of Available Surface Storage

Table D8: Calculation of Available Underground Pipe Storage

Table D9: Calculation of Underground Structure Storage

Table D10: Storage Volumes For 2-Year, 5-Year And 100-Year Storms (MRM) For Sub catchments S03, S04, S05

Table D11: 5- 2-year, 5-year & 100-year Roof Drains Design Sheet - using Flow Controlled Roof Drains

Table D12: Storage Volumes for 2-year, 5-Year and 100-Year Storms (MRM) for Sub catchments S06-1, S06-2

Table D13: 5-Year Storm Sewer Calculation Sheet

TABLE D1

CALCULATION OF AVERAGE RUNOFF COEFFICIENTS FOR PRE-DEVELOPMENT CONDTIONS

Area No.	Roof Areas		Asphalt Areas		Concrete / Pavers		Gravel		Grassed Areas		Sum AC	Total Area (m^2)	C_{AVG}
	C=0.90		C=0.90		C=0.90		C=0.75		C=0.20				
	Area (m^2)	A * C	Area (m^2)	A * C	Area (m^2)	A * C	Area (m^2)	A * C	Area (m^2)	A * C			
E1	152.36	137.1	163.32	147.0					532.97	106.59	390.7	848.65	0.46
Totals											**390.7**	**848.65**	**0.46**

TABLE D2

CALCULATION OF CATCHMENT TIME OF CONCENTRATION FOR PRE-DEVELOPMENT CONDITIONS

Catchment No.	Area (ha)	High Elev (m)	Low Elev (m)	Flow Path Length (m)	Indiv Slope	Avg. C	Time of Conc. Tc (mins)	Description
E1	0.0849	65.4	64.2	11.4	10.6	0.46	0.52	See Note 2

Notes

1) For Catchments with Runoff Coefficient less than C=0.40, Time of Concentration Based on Federal Aviation Formula (Airport Method), from MTO

2) For Catchments with Runoff Coefficient greater than C=0.40, Time of Concentration Based on Bransby Williams Equation, from MTO Drainage Manual

TABLE D3

CALCULATION OF PEAK RUNOFF FOR PRE-DEVELOPMENT CONDTIONS (ALLOWABLE RELEASE RATES)

Area No	Outlet Location	Area (ha)	Time of Conc, Tc (min)	Storm = 2 yr			Storm = 5 yr			Storm = 100 yr			Comment
				I_2 (mm/hr)	Cavg	Q_2 (L/sec)	I_5 (mm/hr)	Cavg	Q_5 (L/sec)	I_{100} (mm/hr)	Cavg	Q_{100} (L/sec)	
E1	Gabriel Street	0.085	10	76.81	0.46	8.34	104.19	0.46	11.3	178.56	0.58	24.2	
Totals		0.085				**8.34**			**11.32**			**24.2**	

Notes

1) Intensity, $I = 732.951/(Tc+6.199)^{0.810}$ (2-year, City of 0ttawa)

2) Intensity, $I = 998.071/(Tc+6.053)^{0.814}$ (5-year, City of 0ttawa)

3) Intensity, $I = 1735.688/(Tc+6.014)^{0.820}$ (100-year, City of Ottawa)

4) Cavg for 100-year is increased by 25% to a maximum of 1.0

5) The standard minimium Time of Concentraion of 10 minutes was used, rather then the calaculted time, since calcualted time was less than 10 minutes.

TABLE D4

AVERAGE RUNOFF COEFFICIENTS FOR POST-DEVELOPMENT CONDITIONS

$C_{ASPH/CONC}$ = 0.90 C_{ROOF} = 0.90 C_{GRASS} = 0.20 C_{PAVERS} = 0.90

Area No.	Asphalt & Conc Areas (m^2)	A * C_{ASPH}	Roof Areas (m^2)	A * C_{ROOF}	Grassed Areas (m^2)	A * C_{GRASS}	Concrete Pavers Area (m^2)	A*C_{PAVERS}	Sum AC	Total Area (m^2)	C_{AVG} (see note)	Comment
S01	9	7.9			60	12	34	31	50.8	103	0.49	Front Yard
S02	56	50.5							50.5	56	0.90	Driveway
S03	208	186.9							186.9	208	0.90	Driveway+Parking Lot
S04					87	17	16	15	31.8	103	0.31	Amenity Area
S05					29	6	25	22	28.1	53	0.53	Side Yard
S06			325.3	292.7					292.7	325	0.90	Building Roof
Totals									***640.8***	***848.3***	***0.76***	

Notes

1) Cavg derived with area from CAD.

TABLE D5

SUMMARY OF POST-DEVELOPMENT PEAK FLOWS (Uncontrolled and Controlled)

Area No	Area (ha)	Time of Conc, Tc (min)	Storm = 2 yr				Storm = 5 yr				Storm = 100 yr				Comment
			C_{AVG}	I_2 (mm/hr)	Q (L/sec)	Q_{CAP} (L/sec)	C_{AVG}	I_5 (mm/hr)	Q (L/sec)	Q_{CAP} (L/sec)	C_{AVG}	I_{100} (mm/hr)	Q (L/sec)	Q_{CAP} (L/sec)	
S01	0.0103	10	0.49	76.81	1.08	1.08	0.49	104.19	1.47	1.47	0.62	178.56	3.15	3.15	uncontrolled
S02	0.0056	10	0.90	76.81	1.08	1.08	0.90	104.19	1.46	1.46	1.00	178.56	2.78	2.78	uncontrolled
S03	0.0208	10	0.90	76.81	3.99		0.90	104.19	5.41		1.00	178.56	10.31		
S04	0.0103	10	0.31	76.81	0.68	**(2.25)**	0.31	104.19	0.92	**(3.06)**	0.39	178.56	1.98	**(6.00)**	Controlled with ICD in CB 203
S05	0.0053	10	0.53	76.81	0.60		0.53	104.19	0.81		0.66	178.56	1.74		
S06	0.0325	10	0.90	76.81	6.25	**(1.55)**	0.90	104.19	8.48	**(1.65)**	1.00	178.56	16.15	**(1.88)**	Flow Controlled Roof Drains (Watts Accutrol)
Totals	**0.0848**				**13.682**	**5.969**			**18.562**	**7.638**			**36.107**	**13.816**	
Allowable						**8.342**				**11.317**				**24.243**	

Notes

1) Intensity, I = 732.951/(Tc+6.199) $^{0.810}$ (2-year, City of 0ttawa)

2) Intensity, I = 998.071/(Tc+6.053) $^{0.814}$ (5-year, City of 0ttawa)

3) Intensity, I = 1735.688/(Tc+6.014) $^{0.820}$ (100-year, City of Ottawa)

4) Cavg for 100-year is increased by 25% to a maximum of 1.0

5) Time of Concentration, Tc = ***10 mins***

6) For Flows under column Qcap which are shown in brackets ***(0.0)*** *, denotes flows that are controlled*

TABLE D6
SUMMARY OF POST DEVELOPMENT STORAGE & RELEASE RATES

Area No.	Area (ha)	Max Release Rate (L/s)			[1] Storage Required (m^3)			Storage Provided (m^3)			[2]Storage Method	[2]Control Method
		2-yr (MRM)	5-yr (MRM)	100-yr (MRM)	2-yr (MRM)	5-yr (MRM)	100-yr (MRM)	2-yr (MRM)	5-yr (MRM)	100-yr (MRM)		
S01	0.0103	1.08	1.47	3.15								
S02	0.0056	1.08	1.46	2.78								
S03	0.0208	**(2.25)**	**(3.06)**	**(6.00)**	1.8	2.5	5.6	7.8	7.8	7.8	Surface Ponding, U/G pipe and CBs	ICD (Hydrovex 50VHV-1 in CB 203)
S04	0.0103											
S05	0.0053											
S06	0.0325	**(1.55)**	**(1.65)**	**(1.88)**	3.2	5.0	11.8	12.2	12.2	12.2	Roof Ponding	Watts Accutrol Flow Control Roof Drains
Totals	**0.0848**	**5.97**	**7.64**	**13.82**	**5.0**	**7.4**	**17.4**	**20.0**	**20.0**	**20.0**		

Notes
1) The storage required is based on the Modified Rational Method (MRM) for the relase rates noted.
2) The storage and control methods to be confirmed in detailed design.

TABLE D7
CALCULATION OF AVAILABLE SURFACE STORAGE

Drainage Area	Ponding Number	Min W/L or T/G (m)	Indiv Spill Elev (m)	[1]Max Depth (m)	Area (m^2)	Max Volume (m^3)
S03	1	64.90	64.95	0.05	12	0.2
	2	64.80	64.95	0.15	65.60	3.3
Totals						**3.5**

Notes:
The Max Depth is is the distance from the Min W/L (T/G) and the lower of the Indiv Spill or System Spill Elev

TABLE D8
CALCULATION OF AVAILABLE UNDERGROUND PIPE STORAGE

Drainage Area	U/S Manhole	D/S Manhole	Pipe Type	Length (m)	Pipe Dia (mm)	Pipe Area (m^2)	Pipe Volume (m3)
S03, S04, S05	201	202	PVC	12.7	200	0.031	0.40
	204	201	PVC	17.6	200	0.031	0.55
	CB ELBOW	204	HDPE	36.9	200	0.031	1.16
Totals							**2.11**

TABLE D9
CALCULATION OF UNDERGROUND STRUCTURE STORAGE

Drainage Area	Structure No.	Size	T/G (m)	Spill Elev (m)	Inv Elev (m)	Sump Elev (m)	[1]Storage Depth (m)	Area (m^2)	Volume (m^3)
S03	CB201	600X600	64.80	64.80	62.74	62.74	2.06	0.36	0.74
	CB202	600X600	64.90	64.90	62.80	62.80	2.10	0.36	0.76
	CB204	600X600	64.96	64.95	63.04	63.04	1.91	0.36	0.69
Totals									**2.19**

Notes:
The Storage Depth is the distance from the invert elevation to either the T/G or Spill Elev (whichever is lower)

Table D10 Storage Volumes for 2-year, 5-Year and 100-Year Storms (MRM) for Subcatchment S03, S04, S05

Area No: **S03, S04, S05**

C_{AVG} = 0.68 (2-yr)

C_{AVG} = 0.68 (5-yr)

C_{AVG} = 0.85 (100-yr, Max 1.0)

Time Interval = 5.00 (mins)

Drainage Area = 0.0364 (hectares)

Duration (mins)	Release Rate = 2.25 (L/sec) Return Period = 2 (years) IDF Parameters, A = 733.0, B = 0.810 (I = A/(T_c+C) , C = 6.199					Release Rate = 3.06 (L/sec) Return Period = 5 (years) IDF Parameters, A = 998.1, B = 0.814 (I = A/(T_c+C) , C = 6.053					Release Rate = 6.00 (L/sec) Return Period = 100 (years) IDF Parameters, A = 1735.7, B = 0.820 (I = A/(T_c+C) , C = 6.014				
	Rainfall Intensity, I (mm/hr)	Peak Flow (L/sec)	Release Rate (L/sec)	Storage Rate (L/sec)	Storage (m^3)	Rainfall Intensity, I (mm/hr)	Peak Flow (L/sec)	Release Rate (L/sec)	Storage Rate (L/sec)	Storage (m^3)	Rainfall Intensity, I (mm/hr)	Peak Flow (L/sec)	Release Rate (L/sec)	Storage Rate (L/sec)	Storage (m^3)
0	167.2	11.5	2.3	9.2	0.0	230.5	15.8	3.1	12.8	0.0	398.6	34.2	6.0	28.2	0.0
5	103.6	7.1	2.3	4.9	1.5	141.2	9.7	3.1	6.6	2.0	242.7	20.8	6.0	14.8	4.4
10	76.8	5.3	2.3	3.0	1.8	104.2	7.1	3.1	4.1	2.5	178.6	15.3	6.0	9.3	5.6
15	61.8	4.2	2.3	2.0	1.8	83.6	5.7	3.1	2.7	2.4	142.9	12.3	6.0	6.3	5.6
20	52.0	3.6	2.3	1.3	1.6	70.3	4.8	3.1	1.8	2.1	120.0	10.3	6.0	4.3	5.1
25	45.2	3.1	2.3	0.8	1.3	60.9	4.2	3.1	1.1	1.7	103.8	8.9	6.0	2.9	4.4
30	40.0	2.7	2.3	0.5	0.9	53.9	3.7	3.1	0.6	1.2	91.9	7.9	6.0	1.9	3.4
35	36.1	2.5	2.3	0.2	0.5	48.5	3.3	3.1	0.3	0.6	82.6	7.1	6.0	1.1	2.3
40	32.9	2.3	2.3	0.0	0.0	44.2	3.0	3.1	0.0	-0.1	75.1	6.4	6.0	0.4	1.1
45	30.2	2.1	2.3	-0.2	-0.5	40.6	2.8	3.1	-0.3	-0.7	69.1	5.9	6.0	-0.1	-0.2
50	28.0	1.9	2.3	-0.3	-1.0	37.7	2.6	3.1	-0.5	-1.4	64.0	5.5	6.0	-0.5	-1.5
55	26.2	1.8	2.3	-0.5	-1.5	35.1	2.4	3.1	-0.6	-2.1	59.6	5.1	6.0	-0.9	-2.9
60	24.6	1.7	2.3	-0.6	-2.0	32.9	2.3	3.1	-0.8	-2.9	55.9	4.8	6.0	-1.2	-4.3
65	23.2	1.6	2.3	-0.7	-2.6	31.0	2.1	3.1	-0.9	-3.6	52.6	4.5	6.0	-1.5	-5.8
70	21.9	1.5	2.3	-0.8	-3.2	29.4	2.0	3.1	-1.0	-4.4	49.8	4.3	6.0	-1.7	-7.3
75	20.8	1.4	2.3	-0.8	-3.7	27.9	1.9	3.1	-1.1	-5.2	47.3	4.1	6.0	-1.9	-8.8
80	19.8	1.4	2.3	-0.9	-4.3	26.6	1.8	3.1	-1.2	-5.9	45.0	3.9	6.0	-2.1	-10.3
85	18.9	1.3	2.3	-1.0	-4.9	25.4	1.7	3.1	-1.3	-6.7	43.0	3.7	6.0	-2.3	-11.8
90	18.1	1.2	2.3	-1.0	-5.5	24.3	1.7	3.1	-1.4	-7.5	41.1	3.5	6.0	-2.5	-13.4
95	17.4	1.2	2.3	-1.1	-6.0	23.3	1.6	3.1	-1.5	-8.3	39.4	3.4	6.0	-2.6	-14.9
100	16.7	1.1	2.3	-1.1	-6.6	22.4	1.5	3.1	-1.5	-9.1	37.9	3.3	6.0	-2.7	-16.5
Max =					**1.8**					**2.5**					**5.6**

Notes

1) Peak flow is equal to the product of 2.78 x C x I x A
2) Rainfall Intensity, I = $A/(Tc+C)^B$
3) Release Rate = Min (Release Rate, Peak Flow)
4) Storage Rate = Peak Flow - Release Rate
5) Storage = Duration x Storage Rate
6) Maximum Storage = Max Storage Over Duration
7) Parameters a,b,c are for City of Ottawa

City of Ottawa IDF Data (from SDG002)

IDF curve equations (Intensity in mm/hr)

100 year Intensity = 1735.688 / (Time in min + 6.014) $^{0.820}$
50 year Intensity = 1569.580 / (Time in min + 6.014) $^{0.820}$
25 year Intensity = 1402.884 / (Time in min + 6.018) $^{0.819}$
10 year Intensity = 1174.184 / (Time in min + 6.014) $^{0.816}$
5 year Intensity = 998.071 / (Time in min + 6.053) $^{0.814}$
2 year Intensity = 732.951 / (Time in min + 6.199) $^{0.810}$

Table D11 : 2-year, 5-year & 100-year Roof Drains Design Sheet - using Flow Controlled Roof Drains

Project: 1568 Meadowbrook
Location: City of Ottawa
Date: Jan 2023

Area #	Drain Type	Roof Drain Type	No Drains per Area	No of Weirs per Drain	Weir Position	Runoff Coeff (Cavg)			Drainage Area		2-year Event						5-year Event						100-year Event						Storage Required *(MRM)*			Maximium Storage Provided at Spill Elevation			
						2-year	5-year	100-year	m^2	ha	Runoff Rate (L/sec)	2yr Ponding Depth (mm)	Roof Drain Capacity Per Weir (gpm)	Drain Capacity Per Drain per weir	Drain Capacity Per Drain (L/sec)	Flow From Roof Drains (L/sec)	Runoff Rate (L/sec)	5yr Ponding Depth (mm)	Roof Drain Capacity Per Weir (gpm)	Roof Drain Capacity Per Drain per weir (gpm)	Roof Drain Capacity Per Drain (L/sec)	Flow From Roof Drains (L/sec)	Runoff Rate (L/sec)	100yr Ponding Depth (mm)	Roof Drain Capacity Per Weir (gpm)	Roof Drain Capacity Per Drain per weir (gpm)	Roof Drain Capacity Per Drain (L/sec)	Total Flow From Roof Drains (L/sec)	2-year (m3)	5-year (m^3)	100-year (m^3)	Area Available for Storage (m^2)	Max Prism Depth (mm)	Max Prisim Volume (m^3)	Total Volume (m3)
S06-1	RD	RD1	1	1	3-1/4 open	0.90	0.90	1.00	162.63	0.0163	3.125	96	12.3	12.3	0.776	0.776	4.240	111	13.1	13.1	0.823	0.823	8.073	148	14.9	14.9	0.940	0.940	1.61	2.48	5.90	122.0	150	6.10	6.10
S06-2	RD	RD1	1	1	3-1/4 open	0.90	0.90	1.00	162.63	0.0163	3.125	96	12.3	12.3	0.776	0.776	4.240	111	13.1	13.1	0.823	0.823	8.073	148	14.9	14.9	0.940	0.940	1.61	2.48	5.90	122.0	150	6.10	6.10
Totals									**325**	**0.0325**	6.251		**24.60**		**1.55**	**1.55**	8.479		**26.10**		**1.65**	**1.65**	**16.15**		**29.80**		**1.88**	**1.88**	**3.22**	**4.96**	**11.80**	**244**		**12.2**	**12.2**
Min												**96**				`		**111**				`		**148**											
Max												**96**						**111**						**148**											

Runoff Based on the Following:

Storm Frequency (years) =	2	5	100
Time of Conc (mins) =	10	10	10
Storm Intensity (mm/hr) =	76.8	104.2	178.6

Roof Drains have Following Flow Rates: WATTS Flow Controlled Drain

Weir Position		Flow (gpm) per depth							Max Flow Rate per Weir @150mm
		0	25	50	75	100	125	150	
		0	0.025	0.05	0.075	0.1	0.125	0.15	
1-None		0	0	0	0	0	0	0	0.000
2-Closed		0	5	5	5	5	5	5	0.315
3-1/4 open		0	5	10	11	13	14	15	0.946
4-1/2 open		0	5	10	12	15	18	20	1.262
5-3/4 open		0	5	10	14	18	21	25	1.577
6-Full		0	5	10	15	20	25	30	1.893

Roof Drain Types

Drain Type =	RD1
Max Overflow Depth (mr	150 mm
Flow Controlled (Yes/No	Yes
Ponding	Yes
Weir Desc	Accutrol
No. Weirs	1

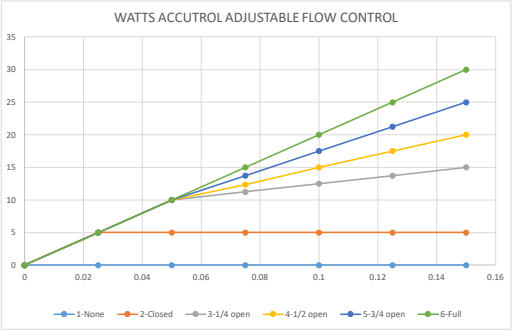

Table D12 Storage Volumes for 2-year, 5-Year and 100-Year Storms (MRM) for Subcatchments S06

Area No: **S06-1, S06-2**

C_{AVG} = 0.90 (2-yr)

C_{AVG} = 0.90 (5-yr)

C_{AVG} = 1.00 (100-yr, Max 1.0)

Time Interval = 5.00 (mins)

Drainage Area = 0.0163 (hectares)

Duration (mins)	Release Rate = 0.78 (L/sec) Return Period = 2 (years) IDF Parameters, A = 733.0, B = 0.810 (I = A/(T_c+C) , C = 6.199					Release Rate = 0.82 (L/sec) Return Period = 5 (years) IDF Parameters, A = 998.1, B = 0.814 (I = A/(T_c+C) , C = 6.053					Release Rate = 0.94 (L/sec) Return Period = 100 (years) IDF Parameters, A = 1735.7, B = 0.820 (I = A/(T_c+C) , C = 6.014				
	Rainfall Intensity, I (mm/hr)	Peak Flow (L/sec)	Release Rate (L/sec)	Storage Rate (L/sec)	Storage (m^3)	Rainfall Intensity, I (mm/hr)	Peak Flow (L/sec)	Release Rate (L/sec)	Storage Rate (L/sec)	Storage (m^3)	Rainfall Intensity, I (mm/hr)	Peak Flow (L/sec)	Release Rate (L/sec)	Storage Rate (L/sec)	Storage (m^3)
0	167.2	6.8	0.8	6.0	0.0	230.5	9.4	0.8	8.6	0.0	398.6	18.0	0.9	17.1	0.0
5	103.6	4.2	0.8	3.4	1.0	141.2	5.7	0.8	4.9	1.5	242.7	11.0	0.9	10.0	3.0
10	76.8	3.1	0.8	2.3	1.4	104.2	4.2	0.8	3.4	2.0	178.6	8.1	0.9	7.1	4.3
15	61.8	2.5	0.8	1.7	1.6	83.6	3.4	0.8	2.6	2.3	142.9	6.5	0.9	5.5	5.0
20	52.0	2.1	0.8	1.3	1.6	70.3	2.9	0.8	2.0	2.4	120.0	5.4	0.9	4.5	5.4
25	45.2	1.8	0.8	1.1	1.6	60.9	2.5	0.8	1.7	2.5	103.8	4.7	0.9	3.8	5.6
30	40.0	1.6	0.8	0.9	1.5	53.9	2.2	0.8	1.4	2.5	91.9	4.2	0.9	3.2	5.8
35	36.1	1.5	0.8	0.7	1.5	48.5	2.0	0.8	1.2	2.4	82.6	3.7	0.9	2.8	5.9
40	32.9	1.3	0.8	0.6	1.3	44.2	1.8	0.8	1.0	2.3	75.1	3.4	0.9	2.5	5.9
45	30.2	1.2	0.8	0.5	1.2	40.6	1.7	0.8	0.8	2.2	69.1	3.1	0.9	2.2	5.9
50	28.0	1.1	0.8	0.4	1.1	37.7	1.5	0.8	0.7	2.1	64.0	2.9	0.9	2.0	5.9
55	26.2	1.1	0.8	0.3	1.0	35.1	1.4	0.8	0.6	2.0	59.6	2.7	0.9	1.8	5.8
60	24.6	1.0	0.8	0.2	0.8	32.9	1.3	0.8	0.5	1.9	55.9	2.5	0.9	1.6	5.7
65	23.2	0.9	0.8	0.2	0.6	31.0	1.3	0.8	0.4	1.7	52.6	2.4	0.9	1.4	5.6
70	21.9	0.9	0.8	0.1	0.5	29.4	1.2	0.8	0.4	1.6	49.8	2.3	0.9	1.3	5.5
75	20.8	0.8	0.8	0.1	0.3	27.9	1.1	0.8	0.3	1.4	47.3	2.1	0.9	1.2	5.4
80	19.8	0.8	0.8	0.0	0.1	26.6	1.1	0.8	0.3	1.2	45.0	2.0	0.9	1.1	5.3
85	18.9	0.8	0.8	0.0	0.0	25.4	1.0	0.8	0.2	1.1	43.0	1.9	0.9	1.0	5.1
90	18.1	0.7	0.8	0.0	-0.2	24.3	1.0	0.8	0.2	0.9	41.1	1.9	0.9	0.9	5.0
95	17.4	0.7	0.8	-0.1	-0.4	23.3	0.9	0.8	0.1	0.7	39.4	1.8	0.9	0.8	4.8
100	16.7	0.7	0.8	-0.1	-0.6	22.4	0.9	0.8	0.1	0.5	37.9	1.7	0.9	0.8	4.6
Max =					**1.6**					**2.5**					**5.9**

Notes

1) Peak flow is equal to the product of 2.78 x C x I x A
2) Rainfall Intensity, I = A/(Tc+C)^B
3) Release Rate = Min (Release Rate, Peak Flow)
4) Storage Rate = Peak Flow - Release Rate
5) Storage = Duration x Storage Rate
6) Maximium Storage = Max Storage Over Duration
7) Parameters a,b,c are for City of Ottawa

City of Ottawa IDF Data (from SDG002)

IDF curve equations (Intensity in mm/hr)

100 year Intensity = 1735.688 / (Time in min + 6.014) $^{0.820}$
50 year Intensity = 1569.580 / (Time in min + 6.014) $^{0.820}$
25 year Intensity = 1402.884 / (Time in min + 6.018) $^{0.819}$
10 year Intensity = 1174.184 / (Time in min + 6.014) $^{0.816}$
5 year Intensity = 998.071 / (Time in min + 6.053) $^{0.814}$
2 year Intensity = 732.951 / (Time in min + 6.199) $^{0.810}$

Table D13 5-YEAR STORM SEWER CALCULATION SHEET

Return Period Storm =	**5**	(5-years, 100-years)
Default Inlet Time=	10	(minutes)
Manning Coefficient =	0.013	(dimensionless)

LOCATION			AREA (hectares)				FLOW (UNRESTRICTED - RATIONAL METHOD)							SEWER DATA										
																				Velocity (m/s)			Hydraulic Ratios	
Location	From Node	To Node	Area No.	Area (ha)	∑ Area (ha)	Average C	Indiv. 2.78*A*R	Accum. 2.78*A*R	Tc (mins)	I (mm/h)	Indiv. Flow (L/sec)	Return Period	Q (L/sec)	Dia (mm) Actual	Dia (mm) Nominal	Type	Slope (%)	Length (m)	Capacity (L/sec)	Vf	Va	Time in Pipe, Tt (min)	Qa/Qf	Va/Vf
	CB ELBOW	CB204	S05	0.005	0.0053	0.53	0.0078	0.008	10.00	104.19	0.81	5.00	0.8	201.16	200	HDPE	1.00	36.93	33.3	1.04	0.32	1.90	0.02	0.31
	CB204	CB201	S04	0.010	0.0156	0.31	0.01	0.017	11.90	95.12	0.84	5.00	1.6	201.16	200	PVC	1.00	17.60	33.3	1.04	0.32	0.91	0.05	0.31
	CB201	CB203	S03	0.0208	0.0364	0.90	0.0520	0.069	12.81	91.38	4.75	5.00	6.3	201.16	200	PVC	0.50	12.70	23.6	0.74	0.52	0.41	0.27	0.70
	CB203	CB202			0.0208			0.069	13.22	89.80		5.00	6.2	201.16	200	PVC	0.50	19.70	23.6	0.74	0.52	0.64	0.26	0.70
	CB202	OGS	S02	0.0056	0.0264	0.90	0.0140	0.083	13.85	87.46	1.23	5.00	7.2	201.16	200	PVC	2.00	4.44	47.1	1.48	0.87	0.08	0.15	0.59
	OGS	STMMH101			0.0420			0.083	13.94	87.15		5.00	7.2	201.16	200	PVC	0.50	1.86	23.6	0.74	0.52	0.06	0.31	0.70
	BLDG	STMMH102	S06	0.033	0.0325	0.90	0.0814	0.081	10.00	104.19	8.48	5.00	8.5	201.16	200	PVC	2.00	4.73	47.1	1.48	0.94	0.08	0.18	0.64
	STMMH102	STMMH101			0.0325			0.081	10.08	103.75		5.00	8.4	201.16	200	PVC	2.00	2.25	47.1	1.48	0.93	0.04	0.18	0.63
	STMMH101	EX.STMH			0.0745			0.16	14.00	86.94		5.00	14.3	201.16	200	PVC	0.50	16.84	23.6	0.74	0.66	0.42	0.61	0.90

Definitions:
Q = 2.78*AIR, where
Q = Peak Flow in Litres per second (L/s)
A = Watershed Area (hectares)
I = Rainfall Intensity (mm/h)
R = Runoff Coefficients (dimensionless)

Notes:

		5yr
Ottawa Rainfall Intensity Values:	a =	998.071
From Sewer Desing Guidelines, 2004	b=	0.814
	c =	6.053

Designed: **Alexander Johnson**	Project: **1136 Gabriel Street**	
Checked: **Aaditya Jariwala, P.Eng**	Location: **Ottawa, Ontario**	
Dwg Reference: **C100**	File Ref: **OTT-24006874-A0 - STM Design Sheet**	Sheet No: **1 of 1**

Appendix E – Correspondence

Email Correspondence from City of Ottawa on Water System Boundary Condition.

Pre-Application Consultation Meeting Minutes

Alexander Johnson

From: Charie, Kelsey <kelsey.charie@ottawa.ca>
Sent: Monday, July 29, 2024 1:22 PM
To: Aaditya Jariwala; Unrau, Derek
Cc: Luciana Traldi
Subject: RE: Gabriel, Maisonneuve, St Pierre Water Capacity
Attachments: 1136Gabriel_Boundary Condition(29july2024).docx; 1108Maisonneuve_Boundary Condition(29july2024).docx; 1132_Boundary Condition(26July2024).docx

CAUTION: This email originated from outside of the organization. Do not click links or open attachments unless you recognize the sender and know the content is safe.

Hi Aaditya,

Please see the results of the updated Boundary Condition requests. Please let me know if you have any questions.

Regards,
Kelsey

From: Aaditya Jariwala <Aaditya.Jariwala@exp.com>
Sent: July 25, 2024 2:11 PM
To: Unrau, Derek <derek.unrau@ottawa.ca>
Cc: Luciana Traldi <luciana@nemoringroup.ca>; Charie, Kelsey <kelsey.charie@ottawa.ca>
Subject: RE: Gabriel, Maisonneuve, St Pierre Water Capacity
Importance: High

CAUTION: This email originated from an External Sender. Please do not click links or open attachments unless you recognize the source.

ATTENTION : Ce courriel provient d'un expéditeur externe. Ne cliquez sur aucun lien et n'ouvrez pas de pièce jointe, excepté si vous connaissez l'expéditeur.

Hi Derek,

Please see attached revised FUS calculation sheets for 1108 Maisonneuve, 1132 St. Pierre and 1136 Gabriel Street. We have decided to go with a non-combustible construction type. With this, the RFF for all three buildings will be less than 9000 L/min.

Domestic demands remain unchanged.

Can you please provide the revised boundary conditions ASAP?

Thanks,

Aaditya Jariwala, M.Eng, P.Eng.
EXP | Project Manager
t : +1.613.688.1899, 63240 | m : +1.613.816.5961 | e : aaditya.jariwala@exp.com

exp.com | legal disclaimer
keep it green, read from the screen

From: Unrau, Derek <derek.unrau@ottawa.ca>
Sent: Thursday, July 11, 2024 12:52 PM
To: Aaditya Jariwala <Aaditya.Jariwala@exp.com>
Cc: Luciana Traldi <luciana@nemoringgroup.ca>; Charie, Kelsey <kelsey.charie@ottawa.ca>
Subject: RE: Gabriel, Maisonneuve, St Pierre Water Capacity

CAUTION: This email originated from outside of the organization. Do not click links or open attachments unless you recognize the sender and know the content is safe.

Hi Aaditya,

Yes, once you have redesigned to be less than 9000L/min we would have to send the boundary request back to Asset Management.

Regards,

Derek Unrau, C.E.T.
Project Manager
Planning, Development and Building Services Department (PDBS)
Development Review - East Branch
City of Ottawa | Ville d'Ottawa
110 Laurier Avenue West Ottawa, ON | 110, avenue. Laurier Ouest. Ottawa (Ontario) K1P 1J1
613.580.2424 ext./poste 27670, Derek.Unrau@ottawa.ca

From: Aaditya Jariwala <Aaditya.Jariwala@exp.com>
Sent: July 11, 2024 11:46 AM
To: Unrau, Derek <derek.unrau@ottawa.ca>
Cc: Luciana Traldi <luciana@nemoringgroup.ca>; Charie, Kelsey <kelsey.charie@ottawa.ca>
Subject: RE: Gabriel, Maisonneuve, St Pierre Water Capacity

CAUTION: This email originated from an External Sender. Please do not click links or open attachments unless you recognize the source.

ATTENTION : Ce courriel provient d'un expéditeur externe. Ne cliquez sur aucun lien et n'ouvrez pas de pièce jointe, excepté si vous connaissez l'expéditeur.

Thanks Derek,

We will evaluate the options on our end to bring the RFF below 9000 L/min. Do we have to resubmit the boundary condition request or we can use the same conditions provided for each site in separate emails?

Thanks,

Aaditya Jariwala, M.Eng, P.Eng.
EXP | Project Manager
t : +1.613.688.1899, 63240 | m : +1.613.816.5961 | e : aaditya.jariwala@exp.com
exp.com | legal disclaimer
keep it green, read from the screen

From: Unrau, Derek <derek.unrau@ottawa.ca>
Sent: Thursday, July 11, 2024 11:29 AM
To: Aaditya Jariwala <Aaditya.Jariwala@exp.com>
Cc: Luciana Traldi <luciana@nemoringgroup.ca>; Charie, Kelsey <kelsey.charie@ottawa.ca>
Subject: Gabriel, Maisonneuve, St Pierre Water Capacity
Importance: High

CAUTION: This email originated from outside of the organization. Do not click links or open attachments unless you recognize the sender and know the content is safe.

Good morning,

In addition to the boundary condition results provided for each site, the following constraints/conditions also apply.

Unfortunately, the existing 152 mm cast iron watermains built in the 1960s have limited capacity and can only support required fire flows of around 9,000 l/min.
Current watermains cannot accommodate fire flows exceeding 9,000 l/min before sending the request to Infrastructure Planning. Applicants may need to revise their boundary conditions to ensure required fire flows are below approximately 9,000 l/min by incorporating measures such as sprinklers, firewalls, increasing exposure distances to adjacent structures, etc. Alternatively, they may consider upsizing the existing watermains if fire flows greater than 9,000 l/min are necessary.

Please let me know if you have any questions.

Regards,

Derek Unrau, C.E.T.
Project Manager
Planning, Development and Building Services Department (PDBS)
Development Review - East Branch
City of Ottawa | Ville d'Ottawa
110 Laurier Avenue West Ottawa, ON | 110, avenue. Laurier Ouest. Ottawa (Ontario) K1P 1J1
613.580.2424 ext./poste 27670, Derek.Unrau@ottawa.ca

'

This e-mail originates from the City of Ottawa e-mail system. Any distribution, use or copying of this e-mail or the information it contains by other than the intended recipient(s) is unauthorized. Thank you.

Le présent courriel a été expédié par le système de courriels de la Ville d'Ottawa. Toute distribution, utilisation ou reproduction du courriel ou des renseignements qui s'y trouvent par une personne autre que son destinataire prévu est interdite. Je vous remercie de votre collaboration.

'
'

This e-mail originates from the City of Ottawa e-mail system. Any distribution, use or copying of this e-mail or the information it contains by other than the intended recipient(s) is unauthorized. Thank you.

Le présent courriel a été expédié par le système de courriels de la Ville d'Ottawa. Toute distribution, utilisation ou reproduction du courriel ou des renseignements qui s'y trouvent par une personne autre que son destinataire prévu est interdite. Je vous remercie de votre collaboration.

'
'

This e-mail originates from the City of Ottawa e-mail system. Any distribution, use or copying of this e-mail or the information it contains by other than the intended recipient(s) is unauthorized. Thank you.

Le présent courriel a été expédié par le système de courriels de la Ville d'Ottawa. Toute distribution, utilisation ou reproduction du courriel ou des renseignements qui s'y trouvent par une personne autre que son destinataire prévu est interdite. Je vous remercie de votre collaboration.

'

Boundary Conditions
1136 Gabriel Street

Provided Information

Scenario	Demand	
	L/min	L/s
Average Daily Demand	7	0.12
Maximum Daily Demand	68	1.14
Peak Hour	103	1.72
Fire Flow Demand #1	7,002	116.7

Location

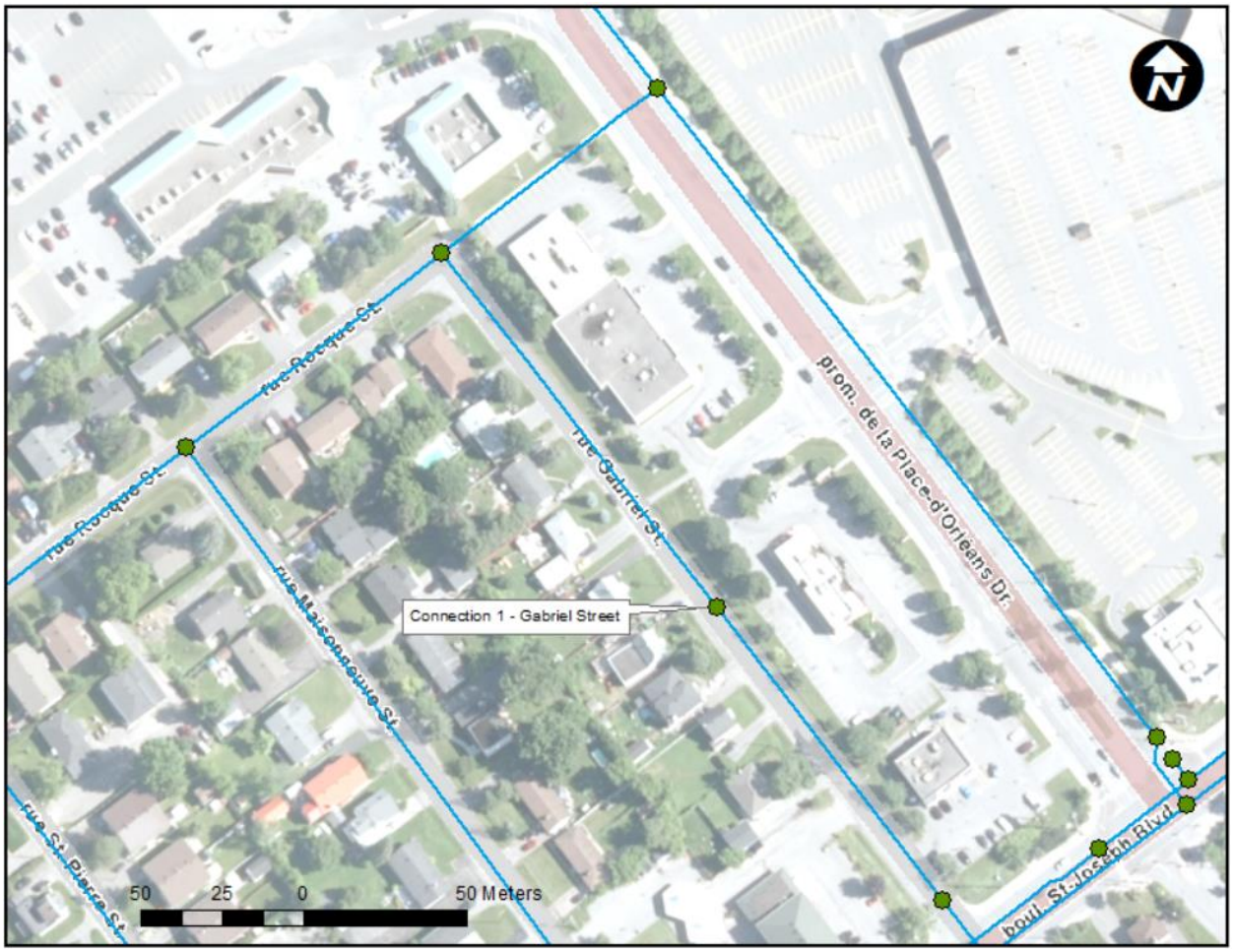

Results

Connection 1 – Gabriel Street

Demand Scenario	Head (m)	Pressure[1] (psi)
Maximum HGL	114.2	69.2
Peak Hour	109.7	62.8
Max Day plus Fire Flow	96.0	43.4

[1] Ground Elevation = 65.5 m

Disclaimer

The boundary condition information is based on current operation of the city water distribution system. The computer model simulation is based on the best information available at the time. The operation of the water distribution system can change on a regular basis, resulting in a variation in boundary conditions. The physical properties of watermains deteriorate over time, as such must be assumed in the absence of actual field test data. The variation in physical watermain properties can therefore alter the results of the computer model simulation. Fire Flow analysis is a reflection of available flow in the watermain; there may be additional restrictions that occur between the watermain and the hydrant that the model cannot take into account.

File No.: PC2024-0213

June 14, 2024

Peter Hume and Alison Clarke
HPUrban Inc.
Via email: peter.hume@hpurban.ca

Subject: Pre-Consultation: Meeting Feedback
Proposed Site Plan Control Application – 1136 Gabriel Street

Please find below information regarding next steps as well as consolidated comments from the above-noted pre-consultation meeting held on June 10, 2024.

Pre-Consultation Preliminary Assessment

1 ☐	**2** ☐	**3** ☐	**4** ☒	**5** ☐

One (1) indicates that considerable major revisions are required while five (5) suggests that the proposal appears to meet the City's key land use policies and guidelines. This assessment is purely advisory and does not consider technical aspects of the proposal or in any way guarantee application approval.

Next Steps

1. A review of the proposal and materials submitted for the above-noted pre-consultation has been undertaken. As of June 6, 2024, planning pre-consultations are no longer mandatory as per the Province of Ontario's Bill 185. Considering the applicant has three sites under consideration in this neighbourhood, a Phase 3 pre-consultation is still recommended by staff.

   If the applicant chooses to proceed with further pre-consultation, please complete a Phase 3 Pre-consultation Application Form and submit it together with the necessary studies and/or plans to planningcirculations@ottawa.ca.

2. In your subsequent pre-consultation submission, please ensure that all comments or issues detailed herein are addressed. A detailed cover letter stating how each issue has been addressed must be included with the submission materials. Please coordinate the numbering of your responses within the cover letter with the comment number(s) herein.

3. Please note, if your development proposal changes significantly in scope, design, or density before the Phase 3 pre-consultation, it is recommended thatyou complete the Phase 2 pre-consultation process.

Submission Requirements and Fees

1. If the applicant would like to proceed to a formal Site Plan Control application submission, fees for a Complex Site Plan will be required in addition to the required application materials.
    a. Additional information regarding fees related to planning applications can be found here.
    b. The applicant should be aware that additional planning applications and fees may apply if the proposal requires any deviation from the existing Official Plan and Zoning By-law.
2. The attached **Study and Plan Identification List** outlines the information and material that has been identified as either required (R) or advised (A) as part of a future complete application submission.
    a. The required plans and studies must meet the City's Terms of Reference (ToR) and/or Guidelines, as available on Ottawa.ca. These ToR and Guidelines outline the specific requirements that must be met for each plan or study to be deemed adequate.
3. All of the above comments or issues should be addressed to ensure the effectiveness of the application submission review.

Consultation with Technical Agencies

1. You are encouraged to consult with technical agencies early in the development process and throughout the development of your project concept. A list of technical agencies and their contact information is enclosed.

Planning

Comments:

1. The site is within the Suburban Transect of the City of Ottawa's Official Plan (2022) and is designated Neighbourhood with an Evolving Neighbourhood Overlay. Further, the site is designated Station Periphery in the Orléans Corridor Secondary Plan (OCSP) (attached). The site is zoned R5A[2179]H(40).

2. A Planning Rationale is required that demonstrates how the new development will be consistent with the vision, goals, and objectives of both the Official Plan and Secondary Plan. This report is triggered by Section 4.1.1 of the Secondary Plan.

3. Planning staff appreciate the developer's intent to make 30% of the residential units affordable. The City of Ottawa's 10-Year Housing and Homelessness Plan aims to create 5,700 to 8,500 affordable housing options throughout Ottawa through partnerships with not-for-profit and private housing providers. There may be opportunities for developing affordable units for low- and medium-income households that the developer should consider exploring.

4. Planning staff appreciate the developer's intent to make 30% of the residential units affordable. The City of Ottawa's 10-Year Housing and Homelessness Plan aims to create 5,700 to 8,500 affordable housing options throughout Ottawa through partnerships with not-for-profit and private housing providers. There may be opportunities for developing affordable units for low- and medium-income households that the developer should consider exploring.

5. The applicant should consider the provision of larger household units (3+ bedrooms).

6. The current location of the garbage storage area outside in the rear is undesirable due to being visible from the street (OCSP section 4.11.9). Staff recommend that the waste management be brought within the ground floor of the building, or otherwise covered and relocated to a different location within the rear yard.

7. The current concept plan has some concerns regarding the parking lot shown:

    a. The only required parking space for the number of units shown is 1 visitor parking space. While the concept plan only shows one space, there appears to be an error on the Parking Statistics notes on the plan, which identifies four total parking spaces. Please correct.

    b. While the parking lot's location at the rear of the property is in line with the Secondary Plan policy (section 4.11.3), there is a large amount of space lost on the lot to asphalt for one parking space. The applicant should consider the possibility of the parking space and walkway being located in the interior side yard beside the building. This change would enable more soft landscaping, communal amenity area, and larger canopy trees to be located in the rear yard.

8. The Secondary Plan recommends a minimum target of 1 bicycle parking space per residential unit (section 4.12). While it is appreciated that the applicant has provided the required bicycle parking spaces by the Zoning By-law, there should be an attempt to meet the Secondary Plan recommendation for 20 spaces.

    a. Long-term bike parking facilities should be provided in a secure interior parking area within the building with convenient access to the street.

    b. Short term bike parking facilities should be provided in convenient, well-lit location on the lot. It would be ideal if the location in the rear yard was sheltered, and the applicant could also consider spaces in the front yard for visitors.

9. Please demonstrate how the proposal will meet the amenity area requirements required in Section 137 of the Zoning By-law. Based on 20 units, 120 m^2 of amenity area is required in total for the site. Fifty percent of this total (60 m^2) must be provided as communal amenity space.

10. Planning staff appreciate the accessible units.

11. The applicant should be aware of the City's Transit-Oriented Development Guidelines, Bird-Safe Design Guidelines and Urban Design Guidelines for Low-rise Infill Housing.

Please contact Jerrica Gilbert, Planner II, for follow-up questions related to planning policy and the application process.

Urban Design

Comments:

12. An Urban Design Brief is required. Please see attached Terms of Reference to guide the preparation of the submission.

    a. The Urban Design Brief should be structured by generally following the headings highlighted under Section 3 – Contents of these Terms of Reference.

13. Please follow the Terms of Reference to prepare these drawings and studies. These include Urban Design Review Panel drawings:

    a. Landscape Plan

    b. Elevations

14. The following elements of the preliminary design are appreciated:
    a. Main entrance at grade,

    b. Proportional distribution of material/colour.

15. The following elements of the preliminary design are of concern:

    a. Unprotected bicycle parking,

    b. Large area of asphalt for only one vehicle,

    c. Unprotected garbage bins visible from the street.

16. Providing parking is recommended at a ratio of 1:1 (parking to unit) for protected bike parking interior to the building or in the rear yard.

17. Please consider the recommendation of relocating the protected garbage enclosure to ensure it is not visible from the public right-of-way.

18. Please consider the recommendation to reduce the amount of asphalt in the rear yard to allow for more soft landscaping and opportunities for trees.

Please contact Christopher Moise, Planner II, for follow-up questions, related to Urban Design.

Engineering
Comments:

19. Watermain looping is required for developments above 50 m3/day (0.58 l/s) to avoid creating a vulnerable service area.

20. District Metering Area (DMA) Chamber(s) are required for private developments serviced by a connection 150 mm or larger or when there are two or more private connections to the public watermain.

21. Please be advised that a water boundary condition request must be submitted to the City Project Manager, Development Review by the civil design engineer or consultant prior to submission and include the following information:

    a. The location of the service and the expected water demand of the proposed development shown on a plan, figure, or map;

    b. Type of development;

    c. Average daily demand: ___ l/s;

    d. Maximum daily demand: ___l/s;

    e. Maximum hourly daily demand: ___ l/s;

    f. Required fire flow: ___ l/s;

    g. Supporting calculations for all demands listed above

22. The water boundary condition request should be completed as soon as possible, as the area holds low water supply and may not have the capacity to facilitate the proposed development.

23. Demonstrate adequate hydrant coverage for fire protection. Please review Technical Bulletin ISTB-2018-02, Appendix I Table 1 – maximum flow to be considered from a given hydrant.

24. Please show the proposed emergency route to be satisfactory to Fire Services.

25. A monitoring maintenance hole shall be required inside of the property line for all non-residential and multi residential buildings connections from a private sewer to a public sewer. See the sewer use by-law for details.

26. Provide pre and post CCTV of any City sewers if there are new connections required to the City sewers as per City Standard CCTV spec S.P. F-4090.

27. A maintenance hole is required to be installed over the public sewer where private sewer connection to the public sewer exceeds 50% of the public sewer diameter. If a maintenance hole is proposed to be installed over existing City infrastructure, clearly indicate on the design drawings the applicable Standard City Drawing.

66. Sewer connections to be made above the springline of the sewermain as per:

    a. Std Dwg S11.1 for flexible main sewers – connections made using approved tee or wye fittings.

    b. Std Dwg S11 (For rigid main sewers) – lateral must be less that 50% the diameter of the sewermain,

    c. Std Dwg S11.2 (for rigid main sewers using bell end insert method) – for larger diameter laterals where manufactured inserts are not available; lateral must be less that 50% the diameter of the sewermain,

    d. Connections to manholes permitted when the connection is to rigid main sewers where the lateral exceeds 50% the diameter of the sewermain. – Connect obvert to obvert with the outlet pipe unless pipes are a similar size.

    e. No submerged outlet connections

67. Please provide an analysis to demonstrate that there is adequate residual capacity in the receiving and downstream wastewater system to accommodate the proposed development.

68. Please adhere to the following stormwater management criteria:

    a. Quantity control criteria:

        i. All post development flows shall be directed towards the street. Absolutely no drainage to neighbouring properties will be accepted.

        ii. Post development storm events shall be controlled to their respective pre-development storm event release rates.

        iii. The pre-development runoff coefficient shall be the lesser of:
            1. the existing coefficient
            2. a maximum equivalent ‘C’ of 0.5

        iv. A calculated time of concentration, which cannot be less than 10 minutes

v. Application of the IDF information derived from the Meteorological Services of Canada rainfall data, taken from the MacDonald Cartier Airport, collected 1966 to 1997.

vi. Since the site is small, an alternative stormwater management option will be acceptable: overcontrol the roof area to a 2-year pre-development level with max C=0.5 while keeping the remaining site uncontrolled. (flows still need to be directed to the street).

b. Quality control criteria:

i. Characterize the water quality to be protected and Stormwater Contaminants (e.g., suspended solids, nutrients, bacteria, water temperature) for potential impact on the Natural Environment, and control as necessary.

ii. Provide Enhanced level of protection (80%) for suspended solids removal.

iii. If an Oil/Grit Separator is required, the OGS unit sizing shall be as per ISO 14034 Environmental Technology Verification

69. Permissible ponding of 350mm for 100-year. No spilling to adjacent sites. At 100-year ponding elevation, you must spill to the ROW. 100-year Spill elevation must be 300mm lower than any building opening or ramp.

70. Consider Pedestrian Accessibilities at max 5%.

71. Reduce the reliance on retaining walls as much as possible by incorporating grading transitions between adjacent properties.

72. Sensitive Marine Clay (SMC) is widely found across Ottawa- geotechnical reports should include Atterberg Limits, consolidation testing, sensitivity values, and vane shear test. Refer to City of Ottawa Geotechnical and Slope Stability Guidelines.

73. No road moratorium that would impact the application has been identified.

74. Any easement required should be shown on all plans.

75. For any proposed exterior light fixtures, please provide certification from a licensed professional engineer confirming lighting has been designed only using fixtures that meet the criteria for full cut-off classification as recognized by the Illuminating Engineering Society of North America and result in minimal light spillage onto adjacent properties (maximum allowable spillage is 0.5 fc).

Additionally, include in the submission the location of the fixtures, fixture type (make, model, part number and mounting height.

76. Minimum Drawing and File Requirements:

    a. Plans are to be submitted on standard A1 size (594mm x 841mm) sheets, utilizing an appropriate Metric scale (1:200, 1:250, 1:300, 1:400, or 1:500).

    b. With all submitted hard copies provide individual PDF of the DWGs and for reports please provide one PDF file of the reports. All PDF documents are to be unlocked and flattened.

77. Record drawings and utility plans are also available for purchase from the City (Contact the City's Information Centre by email at InformationCentre@ottawa.ca or by phone at (613) 580-2424 x.44455.

Please contact Kelsey Charie, Project Manager, for follow-up questions.

Noise

Comments:

78. A noise study assessing roadway noise is required due to proximity to Place d'Orléans Drive.

Please contact Rochelle Fortier, Transportation Project Manager, for follow-up questions.

Transportation

Comments:

79. A TIA is not required.

80. Ensure that the development proposal complies with the Right-of-Way protection requirements as per Schedule C16 of the Official Plan.
    a. Right-Of-Way (ROW) must be unincumbered and conveyed at no cost to the City. Note that conveyance of the ROW will be required prior to registration of the SP agreement. Additional information on the conveyance process can be provided upon request.
    b. Any requests for exceptions to ROW protection requirements must be discussed with Transportation Planning and concurrence provided by Transportation Planning management.
81. Please note that the Transportation Master Plan includes:

    a. Phase 2 LRT east extension (under construction)

b. Feasibility study of cycling facilities on St. Joseph Boulevard between Forest Valley Drive and Tenth Line Road, as part of the Orléans Corridor Secondary Plan Study

82. As the site proposed is residential, AODA legislation applies for all areas accessible to the public (i.e. outdoor pathways, parking, etc.).Please consider using the City's Accessibility Design Standards, which provide a summary of AODA requirements.

83. Covered bicycle parking is recommended.

84. Please see the following considerations on the site plan:

    a. Ensure site accesses meet the City's Private Approach Bylaw and all driveways/aisles meet the requirements outlined in Section 107 of the Zoning By-law.

    b. Show all details of the roads abutting the site; include such items as pavement markings, accesses and/or sidewalks.

    c. Turning movement diagrams required for all accesses showing the largest vehicle to access/egress the site.

    d. Turning movement diagrams required for internal movements including loading areas and garbage.

    e. Show dimensions for site elements, such as lane/aisle widths, access width and throat length, parking stalls, sidewalks, pedestrian pathways, and more.

    f. Parking stalls at the end of dead-end parking aisles require adequate turning around space.

    g. Grey out any area that will not be impacted by this application.

Please contact Rochelle Fortier, Transportation Project Manager, for follow-up questions.

Environment

Comments:

85. There are no natural heritage features, surface water features, or species at risk habitat on or near the site that would trigger the need for an Environmental Impact Statement (EIS). An EIS is not required for this application.

86. A Tree Conservation Report must be submitted with this application. The primary concern for this report is the possibility of this development having a negative impact on the trees on neighbouring properties. As such, an analysis of the

Critical Root Zone (CRZ) of the neighbouring trees must be included. Any development must be kept out of this CRZ unless permission from the neighbouring landowners is given. The TCR may be incorporated into the Landscape Plan, so long as the necessary information is provided.

87. At four storeys, this development is not required to adhere to the Bird Safe Design Guidelines. However, it is still recommended that the applicant consider adapting some of the mitigation features of the Guidelines where applicable.

88. The City has strong provisions for tree planting to help meet the Urban Forest Canopy goals as well as to reduce the impacts of climate change and the urban heat island effect. Please consider adding additional tree plantings where possible and note that the City prefers that tree plantings be of native and non-invasive species.

Please contact Mark Elliott, Environmental Planner, for follow-up questions.

Forestry

Comments

89. A Landscape Plan (LP) and Tree Conservation Report (TCR) are submission requirements for a Site Plan Control application. The TCR can only be waived if there are no trees 10 cm in diameter or greater on the subject site, no City trees of any size in the right of way, and no adjacently owned trees with their critical root zones extending into the development site. Proof can be provided in a combination of photos and plans confirming these conditions do not exist.

90. The secondary plan notes most of the area is underlain with Sensitive Marine Clay (SMC) soils. Complete geotechnical investigations as early as possible to ensure adequate space and soil volume is provided for tree planting, as required by the Official Plan. Prepare the LP in conjunction with the Geotechnical Report.

91. Reduce hardscaping/paving in the rear yard. Consider Plannings suggestion to move the parking space to the side yard. Move bike parking so that it does not conflict with suitable areas for tree planting.

92. If the site may be designed without the drainage ditches, it will offer more opportunity for tree planting in the front yards.

93. Planning Forestry would not support a change to the zoning for the site that impacts tree planting opportunities.

94. The following Tree Conservation Report (TCR) requirements have been adapted from the Schedule E of the Urban Tree Protection Guidelines:

    a. A Tree Conservation Report (TCR) must be supplied for review along with the suite of other plans/reports required by the City.

b. Any tree 10 cm in diameter or greater and City-owned trees of any diameter requires a tree permit issued under the Tree Protection Bylaw (Bylaw 2020 – 340). The permit will be based on an approved TCR and made available at or near plan approval.
c. The TCR must contain 2 separate plans/maps:
    i. Plan/Map 1 illustrates existing conditions with tree cover information.
    ii. Plan/Map 2 illustrates proposed development with tree cover information.
d. The TCR must list all trees on site, as well as off-site trees if the CRZ (critical root zone) extends into the developed area, by species, diameter, and health condition. Please note that averages can be used if there are forested areas.
e. Please identify trees by ownership including private onsite, private on adjoining site, city owned and co-owned trees on a property line.
f. If trees are to be removed, the TCR must clearly show where they are, and document the reason they cannot be retained.
g. The removal of trees on a property line will require the permission of both property owners.
h. All retained trees must be shown, and all retained trees within the area impacted by the development process must be protected as per City guidelines available at Tree Protection Specification or by searching Ottawa.ca.
i. The city encourages the retention of healthy trees. If possible, please seek opportunities for retention of trees that will contribute to the design/function of the site.
j. Removal of a City tree is not permitted unless justified. If justified, monetary compensation for the value of the tree must be paid before a tree removal permit is issued.

95. Landscape Plan Terms of Reference must be adhered to for all tree planting.

96. Additional Elements for Tree Planting in the Right of Way:

a. Please ensure any retained trees are shown on the Landscape Plan.

b. Sensitive Marine Clay - Please follow the City's 2017 Tree Planting in Sensitive Marine Clay guidelines.

c. Soil Volume - Please demonstrate as per the Landscape Plan Terms of Reference that the available soil volumes for new plantings will meet or exceed the minimum soil volumes requested.

d. The city requests that consideration be given to planting native species wherever there is a high probability of survival to maturity.

e. Efforts shall be made to provide as much future canopy cover as possible at a site level, through tree planting and tree retention. The Landscape

Plan shall show/document that the proposed tree planting and retention will contribute to the City's overall canopy cover over time. Please provide a projection of the future canopy cover for the site to 40 years.

f. Please see the following minimum setback requirements:

   i. Maintain 1.5m from sidewalk or MUP/cycle track or water service laterals.
   ii. Maintain 2.5m from curb.
   iii. Coniferous species require a minimum 4.5m setback from curb, sidewalk, or MUP/cycle track/pathway.
   iv. Maintain 7.5m between large growing trees, and 4m between small growing trees. Park or open space planting should consider 10m spacing, except where otherwise approved in naturalization / afforestation areas.
   v. Adhere to Ottawa Hydro's Planting Guidelines (species and setbacks) when planting around overhead primary conductors.

59. Please see the following tree specifications:

   a. Minimum stock size: 50mm tree caliper for deciduous, 200cm height for coniferous.
   b. Maximize the use of large deciduous species wherever possible to maximize future canopy coverage.
   c. Tree planting on City property shall be in accordance with the City of Ottawa's Tree Planting Specification and (if possible) include watering and warranty as described in the specification.
   d. No root barriers, dead-man anchor systems, or planters are permitted.
   e. No tree stakes unless necessary (and only 1 on the prevailing winds side of the tree).

60. Please see the following hard surface planting specifications:

   a. If there are hard surface plantings, a planting detail must be provided.

   b. Curb style planters are highly recommended.

   c. No grates are to be used and if guards are required, City of Ottawa standard (which can be provided) shall be used.

   d. Trees are to be planted at grade.

Please contact Hayley Murray, Planning Forester, for follow-up questions related to trees.

<u>Parkland</u>

Comments:

61. Cash-in-lieu of Parkland (CILP) will apply to this application, at the rate specified in the Parkland Dedication By-law No.2022-280 (as amended):

a. This proposal is for a residential development of greater than 18 units per net hectare.

b. Where the property is less than or equal to five hectares, the rate for residential uses > 18 units/net ha = the land value of the area determined by the following calculation:

   i. The lesser of:

      1. 1 hectare per 1,000 net residential units; or
      2. 10% of the gross land area.

c. Based on the land area identified for this site, preliminary parkland area calculation is 84.85 m^2.

63. Cash in lieu of parkland amount will then be calculated using the appraised value of the land per square metre.

64. CILP payment will be due prior to the issuance of a Building Permit.

65. Please note that the parkland dedication calculation provided is preliminary and is subject to change upon receipt of the development application and supporting documentation. The parkland dedication requirement will also be re-evaluated should any of the details of the proposal be modified.

Please contact Marika Atfield, Parks Planner, for follow-up questions related to parkland.

Community Issues

Comments:

97. The Ottawa Neighbourhood Equity Index identifies the Convent Glen-Place d'Orleans community as having a possible equity concern. Development proponents in this area should consider how their proposal may contribute to improving inequities for both existing and future residents, especially in the domain of social and human development, health, community belonging and the physical environment.

Other

98. The High Performance Development Standard (HPDS) is a collection of voluntary and required standards that raise the performance of new building projects to achieve sustainable and resilient design. The HPDS was passed by Council on April 13, 2022.

    a. At this time, the HPDS is not in effect and Council has referred the 2023 HPDS Update Report back to staff with direction to bring forward an updated report to Committee with recommendations for revised phasing timelines, resource requirements and associated amendments to the Site Plan Control By-law.

b. Please refer to the HPDS information attached and ottawa.ca/HPDS for more information.

Should there be any questions, please do not hesitate to contact myself or the contact identified for the above areas / disciplines.

Yours Truly,
Jerrica Gilbert, Planner II

Encl. Urban Design Brief – Terms of Reference

Orléans Corridor Secondary Plan

c.c. Kelley Livingstone, Senior PL (Development Review)
Zoha Rashid, PL (Development Review)
Rochelle Fortier, PM (Transportation)
Kelsey Charie, IPM (Infrastructure Approvals)
Derek Unrau, Senior IPM (Infrastructure Approvals)
Christopher Moise, PL (Urban Design)
Marika Atfield, PL (Parks and Recreation)
Hayley Murray, PL (Forestry)
Mark Elliott, PL (Environmental)

Peter Hume (HP Urban Inc.)
Alison Stirling (HP Urban Inc.)
Sael Nemorin (Nemorin Group Limited)
Leah Arsenault (Nemorin Group Limited)
Luciana Traldi (Nemorin Group Limited)

SUPPLEMENTARY DEVELOPMENT INFORMATION

The following details have been compiled to provide additional information on matters for consideration throughout the application approval and development process. Please note, this document is updated from time to time and should be reviewed for each project proposed to be undertaken.

General

- Refer to Planning application submission information and materials and fees for further information on preparing for application submission. Be aware that other fees and permits may be required, outside of the development review process.
- Additional information is available related to building permits, development charges, and the Accessibility Design Standards.
- You may obtain background drawings by contacting geoinformation@ottawa.ca.
- Plans are to be standard A1 size (594 mm x 841 mm) or Arch D size (609.6 mm x 914.4 mm) sheets, dimensioned in metric and utilizing an appropriate Metric scale (1:200, 1:250, 1:300, 1:400 or 1:500).
- All PDF submitted documents are to be unlocked, flattened and not saved as a portfolio file.
- Where private roads are proposed:
    - Submit a Private Roadway Street Naming application to Building Code Services Branch for any internal private road network.
    - Applications are available at all Client Service Centres and the private roadway approval process takes three months.

Servicing and Site Works

Servicing and site works shall be in accordance with the following documents:

- Ottawa Sewer Design Guidelines (October 2012)
- Ottawa Design Guidelines – Water Distribution (2010)
- Geotechnical Investigation and Reporting Guidelines for Development Applications in the City of Ottawa (2007)
- City of Ottawa Slope Stability Guidelines for Development Applications (revised 2012)
- City of Ottawa Environmental Noise Control Guidelines (January, 2016)
- City of Ottawa Park and Pathway Development Manual (2012)
- City of Ottawa Accessibility Design Standards (2012)
- Ottawa Standard Tender Documents (latest version)

- Ontario Provincial Standards for Roads & Public Works (2013)

Exterior Site Lighting

Where proposed, requires certification by an acceptable professional engineer, licensed in the Province of Ontario, which states that the exterior site lighting has been designed to meet the following criteria:

- It uses only fixtures that meet the criteria for Full Cut-Off (Sharp cut-off) classification, as recognized by the Illuminating Engineering Society of North America (IESNA or IES), and
- It results in minimal light spillage onto adjacent properties. As a guideline, 0.5 foot-candle is normally the maximum allowable spillage.

The location of the fixtures, fixture type (make, model, part number and the mounting height) must be shown on one of the approved plans.

City Surveyor Direction

- The determination of property boundaries, minimum setbacks and other regulatory constraints are a critical component of development. An Ontario Land Surveyor (O.L.S.) needs to be consulted at the outset of a project to ensure properties are properly defined and can be used as the geospatial framework for the development.
- Topographic details may also be required for a project and should be either carried out by the O.L.S. that has provided the Legal Survey or done in consultation with the O.L.S. to ensure that the project is integrated to the appropriate control network.

  Questions regarding the above requirements can be directed to the City's Surveyor, Andre Roy, at Andre.Roy1@ottawa.ca.

Waste Management

- New multi-unit residential development, defined as containing six (6) or more units, intending to receive City waste collection services will be required, as of June 1, 2022, to participate in the City's Green Bin program in accordance with Council's approval of the multi-residential waste diversion strategy. The development must include adequate facilities for the proper storage of allocated garbage, recycling, and green bin containers and such facilities built in accordance with the approved site design. Questions regarding this change and requirements can be directed to Andre.Laplante@ottawa.ca.

- For sites containing:
  - One or more buildings with a total GFA greater than 2000 square metres;

- Retail shopping complexes with a total GFA greater than 10,000 square metres;
- Sites containing office buildings with total GFA greater than 10,000 square metres;
- Hotels and motels with more than 75 units;
- Hospitals (human);
- Educational institutions with more than 350 students; or
- Manufacturing establishments working more than 16,000 person-hours in a month

A Waste Reduction Workplan Summary is required for the construction project as required by O.Reg. 102/94, being "Waste Audits and Waste Reduction Work Plans" made under the Environmental Protection Act, RSO 1990, c E.19, as amended.

Fire Routes

- Fire routes are required to be designated by By-law for Fire Services to establish them as a legal fire route. Where a development proposes to establish a fire route, an Application for Fire Route Designation is to be made. Questions regarding the designation of fire routes and required process can be directed to fireroutes@ottawa.ca.

Dewatering Activities

- Project contractors and/or your engineers are required to contact the Sewer Use Program to arrange for the proper agreements or approvals to allow for the discharge of water from construction dewatering activities to the City's sanitary or storm sewer system. Please contact the Sewer Use Duty Officer at 613-580-2424 ext. 23326 and/or suppue@ottawa.ca.

Backflow Prevention Devices for Premise Isolation

- Buildings or facilities installing a backflow preventer for premise isolation of the drinking water system must register with the City's Backflow Prevention Program where a moderate or severe hazard may be caused in accordance with CSA B64.10 "Selection and Installation of Backflow Preventers". Please contact the Backflow Prevention Program at 613-580-2424 ext. 22299 or backflow@ottawa.ca to submit a Premise Isolation Survey.

Energy Considerations

- Are you considering harvesting thermal energy from the wastewater infrastructure or harvesting geothermal energy?

- Additional information can be found on the City website or by contacting Melissa Jort-Conway.

Flood Plain Mapping and Climate Change

- An interactive map, for informational purposes only, showing the results of on-going flood plain mapping work completed by the Conservation Authorities in partnership with the City is now available. This mapping may be used to identify known riverine flood hazards for a property or area. The map and additional related information can be found on Ottawa.ca.

Blasting

- Where blasting may take place:
  - Blasting activities will be required to conform to the City's Standard S.P. No. F-1201 entitled Use of Explosives, as amended.
  - To avoid future delays in process, including the Municipal Consent process for shoring, ensure communication with necessary entities, including utilities, is undertaken early.
- Blasting and pile driving activities in the vicinity of Enbridge Gas Distribution and Storage (GDS) facilities require prior approval by GDS. The Blasting and Pile Driving Form, referenced in Enbridge's Third Party Requirements in the Vicinity of Natural Gas Facilities Standard, must be provided to mark-ups@enbridge.com by the Owner of the proposed work for all blasting and pile driving operations. In addition, a licensed blasting consultant's stamped validation report must be submitted to GDS for review if blasting is to occur within thirty (30) metres of GDS facilities. The request must be submitted a minimum of four weeks prior to the beginning of work to allow sufficient time for review.

Archaeological

- Archaeological Resources
  - Should potential archaeological resources be encountered during excavation activities, all Work in the area must stop immediately and the Owner shall contact a provincially licensed archaeologist.
  - If during the process of development deeply buried/undetected archaeological remains are uncovered, the Owner shall immediately notify the Archaeology Section of the Ontario Ministry of Tourism, Culture and Sport.
  - In the event that human remains are encountered during construction, the Owner shall immediately contact the police, the Ministry of Tourism, Culture and Sport and the Registrar of Cemeteries, Cemeteries Regulation Unit, Ministry of Consumer and Business Services, Consumer Protection Branch.

Trees

- The City's Tree Protection Bylaw, being By-Law No. 2020-340, as amended, requires that any trees to be removed shall be removed in accordance with an approved Tree Permit and Tree Conservation Report and that all retained trees will be protected in accordance with an approved Tree Conservation Report.

Limiting Distance and Parks

- A Limiting Distance Agreement may be required by Building Code Services before building permit(s) can be issued with respect to the proximity of the building to a park block. The City will consider entering into a Limiting Distance Agreement with the Owner with such Agreement to be confirmed through the City's Corporate Real Estate Office. A Limiting Distance Agreement is at the expense of the Owner.

Development Constructability

How a development is constructed, its constructability, is being looked at earlier in the development review process to raise awareness of potential impacts to the City's right of way and facilitate earlier issue resolution with stakeholders. Where a construction management plan is required as part of the site plan or subdivision application approval, conditions will be included that set out the specific parameters to be addressed for the specific project. However, please note the following construction and traffic management requirements and considerations in the development of your project.

- **Open Lane (includes all vehicular lanes, transit lanes and cycling lanes) Requirements**
    - Unless specified in the site-specific conditions to be provided by City of Ottawa Traffic Management at the time of approval, the following requirements must be adhered to and accommodated as part of any proposed encroachments and construction management plan. The standard requirements outlined in this section shall further apply to cycling facilities and Transit.
        - All lanes are to function uninterrupted at all times.
        - No interruption or blockage of traffic is permitted.
        - No loading or unloading from an open lane is permitted.
        - All vehicular travel lanes are to be a minimum of 3.5 metres in width.
        - All cycling lanes are to be a minimum of 1.5 metres.
- **Pedestrian Requirements**
    - Unless specified in the site-specific conditions provided by City of Ottawa Traffic Management at the time of approval, the contractor is required to maintain a minimum width of 1.5 metres for a pedestrian facility on one side

of the corridor at all times; even in instances where a pedestrian facility was not present prior to construction.

- The facility shall include a free and unobstructed hard surface acceptable for the use of all pedestrians including those with accessibility challenges and shall maintain access to all buildings and street crossings.
- The facility must always be maintained in a clean condition and in a good state of repair to the satisfaction of the City.
- Any change of level which is over 13 millimetres in height is to be provided with a smooth non-tripping transition.
- Any temporary barriers or fencing shall include a cane detectable boundary protection with edge or barrier at least 75 millimetres high above the ground surface.
- If works overhead are required, a 2.1 metre minimum clear headroom must be provided.
- If overhead protection is required above the pedestrian facility, it is to be offset a minimum of 600 millimetres from any travel lane.

- **Transit Requirements**
  - Travel lanes accommodating OC Transpo must be a minimum of 3.5 metres in width and have a minimum 4.5 metre vertical clearance at all times.
  - Should access to a bus stop be impacted, the developer will be required to email TOPConstructionandDetours@ottawa.ca a minimum of 20 working days prior to work commencing to coordinate any site-specific conditions as part of the work. This includes temporary relocation of transit stops, removal of bus shelters or stops and transit detour routes.
  - The contractor may be required to relocate and provide a suitable alternative to OC Transpo's bus stop to the satisfaction of OC Transpo
  - The Contractor shall provide OC Transpo with a minimum of ten (10) working days' notice to coordinate temporary relocation of bus stops. When a bus stop and/or shelter must be temporarily relocated, the contractor may be required to provide stop infrastructure (i.e. bench, bus and/or shelter pads), to the satisfaction of OC Transpo.
  - All temporary stop locations including infrastructure are to be fully accessible in accordance with City of Ottawa Accessibility Design Standards and to the satisfaction of the OC Transpo.
  - Temporary bus stops are to be constructed and ready for use prior to the start of any works that would impact the regular bus stop location(s).

- **Public Consultation**
  - May include, but not be limited to, proponent lead public meeting(s), letter notification(s) and information dissemination via print, electronic means or

social media, to impacted properties above and beyond the notification requirements specified in the Road Activity By-law.

- **General Considerations for all Applications**
  - A comprehensive construction management plan should include and consider the following:
    - The proposed stages of construction and the anticipated durations of each stage and any impact to existing travel lanes, pedestrian facilities, cycling facilities and/or transit facilities. Any proposed encroachment should be identified and dimensioned on the site plan for review of feasibility.
    - The proposed constructability methods being used as part of the proposed development (ie: fly forming, Peri forming etc.) and any additional traffic impacts/interruptions anticipated with proposed methods. If a crane is being placed on site, the location should be identified, and show the overhead impacts of the crane.
    - Consideration that any tie-backs and/or shoring within the City of Ottawa Right of Way are subject to Municipal Consent in advance of commencement of the project. Approval for encroachments is not guaranteed if impacts to transportation facilities cannot be addressed to the City's satisfaction.
    - Identify any truck hauling routes to and from the proposed development site and any proposed accesses. Designated heavy truck routes are to be followed at all times, however, if a deviation is required from the existing heavy truck route network, then a structural review may be required as part of an Over-dimensional Vehicle Project Permit.
    - Identify the location of any site trailers and the location. Note, if placing a site trailer above any walk-through scaffolding or on the second floor (or above), an engineering drawing must be submitted to building code services for review. More information can be found on the Building Permit Approval process.
    - Identify equipment and/or materials storage locations as required. Storage is not permitted on the road or the roadway shoulders or boulevards, unless the storage areas are identified in the traffic control plan and appropriate traffic control devices protect the equipment or materials.
  - Any work as part of the development that requires a road cut, road closure or encroachment will be subject to the Road Activity By-law and potential site-specific conditions identified at site plan or subdivision approval which will be noted on the subsequent Permit(s). Information about construction in the right-of-way including applying for permits and associated fees can be found on the City's website.

List of Technical Agencies to Consult

Proposed Site Plan Control Application –1136 Gabriel St – PC2024-0213

☒	Zayo	Utility.Circulations@Zayo.com
☒	Bell Canada	circulations@wsp.com
☒	Telus Communications	Engineering.Requests@telus.com / jovica.stojanovski@telus.com
☒	Rogers Communications	OPE.Ottawa@rci.rogers.com
☒	Enbridge Gas Distribution	municipalplanning@enbridge.com
☒	Hydro Ottawa (Local Distribution)	ExternalCirculations@HydroOttawa.com

Urban Design Brief

Terms of Reference

1. Description

An Urban Design Brief is intended to illustrate how a development proposal represents high-quality and context sensitive design that implements policies of the Official Plan, relevant secondary plans, and Council approved plans and guidelines. The Urban Design Brief should not replace or replicate the Planning Rationale, it is intended to be a highly graphic document that is complimentary to the Planning Rationale. The purpose of this Terms of Reference is to assist the applicant to organize and substantiate the design approach and considerations in support of the proposed development and to assist in the review of the proposal.

2. Authority To Request / When Required

An Urban Design Brief will be required for the following development applications:

Official Plan Amendments:

Per *Planning Act*, Section 22 (4) and (5) for information or materials required by the City to review an Official Plan Amendment Application if the official plan contains provisions relating to requirements under this subsection, which propose increases in height or density.

Zoning By-law Amendments:

Per *Planning Act*, Section 34 (10.2) for information or materials required by the City to review a Zoning By-law Amendment Application to permit the extension or enlargement of any land, building or structure used for any purpose prohibited by the by-law, which propose increases in height or density.

Site Plan Control Applications:

Per *Planning Act*, Section 41 (3.4) for information or materials required by the City to review a Site Plan Control Application and Section 41 (4) and 41 (4.1.1) for elements, facilities and works where the appearance impacts matters of health, safety, accessibility, sustainable design or the protection of adjoining lands.

An Urban Design Brief is a requirement for all Site Plan Control Application thresholds in accordance with the City of Ottawa Site Plan Control By-law as amended; with the exception of a “Rural Small” Site Plan Control application.

For residential buildings with 25 or more residential units, the City has authority under Section 41 (4) paragraph 2 to require. For residential buildings with less than 25 residential units, the City has authority to require for such buildings based on 11.1 (3) of the Official Plan and 41 (5) of the *Planning Act* if the units are within the Urban area or the High-performance Development Standard threshold in the rural area, as per the Site Plan Control By-law.

For all other uses (non-residential and mixed-use) the City has authority under Section 41 (4) paragraph 2 to require.

Plan of Subdivision

Per *Planning Act*, Section 51 (18) for information or materials required by the City to review Plan of Subdivision applications, which include multiple blocks of development planned for medium and/or high-rise development and a mix of land uses.

3. Content

The content for an Urban Design Brief is itemized in the following checklist. Each required item must be discussed and/or illustrated to the appropriate level of detail, commensurate with the complexity of the proposal. Required item(s) are determined by the lead City Urban Designer at the pre-consultation meeting and will be selected from the checklist below:

PROJECT DESCRIPTION

- ☐ Brief description of the design intent behind the development proposal. This description should be more design detailed, and not replicate the description within the Planning Rationale.
- ☑ Project statistics, including gross floor area, the breakdown of floor area for different uses, total number and detailed breakdown of units, total number and detailed breakdown of vehicle and bike parking, building heights, lot coverage, etc. Project statistics should be illustrated in a table.
- ☑ Rendering of the proposal.

DESIGN DIRECTIVE(S)

- ☐ A concise summary and response to the applicable City's design policies, including from the Official Plan, and City urban design guidelines. A more

detailed response shall be provided for any applicable urban design criteria that are not being met by the proposal.

- ☑ A response to urban design directions provided at the various pre-consultation meetings with City staff.

SITE, CONTEXT, AND ANALYSIS

Photographs, maps, diagrams, and images may be utilized along with brief explanatory text to document and analyze condition and context of the site. The requested information should cover area within a 100 metre radius of a development site. A larger radius may be requested for larger / more complex projects.

- ☐ Photographs of existing site conditions and surrounding area, including a numbered map pinpointing where each photo is taken. Correspond these numbers with the site photos and include arrows illustrating the direction of the photograph.
- ☐ Perspective images to and / or from the site.
- ☐ Protected view corridors or views of interest that may be impacted by the proposed development.
- ☐ Built and natural heritage assets on site and adjacent area.
- ☐ Microclimate conditions of the site.
- ☐ Key uses, destinations, and spatial elements in the surrounding area such as focal points/nodes, gateways, parks/open spaces, and public arts.
- ☐ Urban pattern (streets, blocks).
- ☐ Characteristics of adjacent streets and public realm.
- ☐ Mobility networks, such as transit stations, street networks, cycling facilities, pedestrian routes and connections, and parking.
- ☐ Future and current development proposals on adjacent properties.
- ☐ The planned functions of the adjacent properties, such as the permitted building envelope under current zoning.

DESIGN RESEARCH

Diagrams, 3D images and other tools may be utilized to explain and illustrate design aspirations, alternatives and proposed outcomes.

- ☐ Parti diagrams, sketches, and precedent images.
- ☐ Alternative site plan options.
- ☐ Alternative massing options.
- ☐ Design evolution.
- ☐ Massing of the proposed development in the existing context.
- ☐ Massing of the proposed development in the planned context. The planned context may be represented by the current zoning permissions OR policy criteria if zoning is not in keeping with Official Plan direction.
- ☐ Block Plan illustrating potential future development in the area in which the proposed site is situated.
- ☐ Built form transition between the proposed development and the surrounding area.
- ☐ Response to abutting public realm conditions beyond the boundaries of the site.
- ☐ Street cross sections that show the building wall to building wall conditions of the adjacent streets.
- ☐ Approach to sustainable design as it relates to the City's High-performance Development Standards or any other accredited system such as LEED.
- ☐ Approach to bird-safe design as it relates to the City's Bird-Safe Design Guidelines

ADDITIONAL MATERIALS – APPENDIX

The following appendix of additional materials is only required when an application is subject to review by the City's Urban Design Review Panel as the Urban Design Brief will be used as the Urban Design Review Panel Presentation. The requirement for the submission of the following drawing(s) and studies are made separately at the pre-consultation by the Lead Planner and are the subject of other Terms of Reference. The lead City Urban Designer will indicate the required item(s) from the checklist below to be provided as an appendix to the Urban Design Brief.

- ☐ Site Plan
- ☐ Landscape Plan

- ☐ Plan of Subdivision
- ☐ Grading and Drainage Plan
- ☐ Site Servicing Plan
- ☐ Building elevation(s) of the proposed building(s). Conceptual drawings may suffice in support of a Zoning By-law and/or Official Plan Amendment.
- ☐ Floor Plan(s) of the proposed building(s). Conceptual drawings may suffice in support of a Zoning By-law and/or Official Plan Amendment
- ☐ Wind Analysis
- ☐ Shadow Analysis
- ☐ High-performance Development Standards Checklist
- ☐ Heritage Impact Statement

4. Roles and Responsibilities / Qualifications

The Urban Design Brief is required to be signed by a member holding a professional membership with the OAA, OALA, OPPI, and/or CIP, or equivalent professional organization; and should include materials prepared by urban designer(s), licensed architect(s), licensed landscape architect(s), and registered planner(s).

5. Submission Requirements

- 8.5x11 or 11x17 package (landscape orientation preferred)
- Electronic copies of all required studies and plans must be supplied in Adobe .PDF format and are to be unlocked and flattened.
- Supporting Georeferenced Digital CAD/BIM/GIS files for 3D Building Massing Model (in accordance with the City's 3D Massing Submission Requirements) is required for all development applications associated with a mid-rise and/or high-rise building where a design brief is a requirement of a complete application.

1. Accessible Parking Spaces

The terms Type A and Type B Parking Spaces have the same meaning as within O. Reg 191/11

This section applies to:

1) *Parking garages and related structures*
2) *Surface parking*
3) *On-street parking*

Standard Ref.	Requirements	Compliance	Comments
3.1.1.	**Provision:** 1 Type A accessible parking space must be provided where there are 12 or fewer spaces (see Table 3 for a complete list)	Y N N/A	
3.1.2	**Provision:** 4% of the total number of parking spaces should be accessible	Y N N/A	
3.1.2	**Provision:** if the total number of spaces is greater than 1001, provide 11 accessible parking spaces plus an addition 1% of the total number of spaces	Y N N/A	
3.1.3	**Access Aisle:** minimum of 1.5 m (see Figure 25)	Y N N/A	
3.1.3	**Location:** a maximum of 30 m from nearest accessible entrance	Y N N/A	
3.1.3	**Surface:** firm, stable and slip resistant	Y N N/A	
3.1.3	**Running slope:** maximum of 1:50 (2%)	Y N N/A	
3.1.3	**Cross slope:** maximum of 1:50 (2%)	Y N N/A	
3.1.3	**Type A spaces:** Length 5.2 m Width 3.4 m Type B spaces Length: 5.2 m Width: 2.4 m	Y N N/A	
3.1.3	**Overhead clearance:** minimum of 2.1 m	Y N N/A	
3.1.3	**Access Aisle:** minimum of 1.5 m. Must be clearly marked and adjacent to accessible parking space	Y N N/A	
3.1.4.1	**Vertical Signage:** **Width:** 0.3 m **Height:** 0.6 m (minimums)	Y N N/A	

Note – this Checklist must be read in conjunction with the City of Ottawa's Accessible Design Standards Document, 2015. All figures referenced in this document can be found in the City's Accessible Design Standards document.

	Mounted: 1.5 m to 2.0 m high at centre • Marked with International Symbol of Accessibility (see Figure 25)		
3.1.4.2	**Pavement Markings** • Marked with the International Symbol of Accessibility • 15.25 m wide by 15.25 m deep • Locate near the back of the space for 90 degree or angled parking spaces • Locate in the centre for parallel parking spaces (see Figure 27)	Y N N/A	

2. Passenger Loading Zone

Standard Ref.	Requirements	Compliance	Comments
3.2.1	**Location:** maximum of 30 m from nearest accessible entrance	Y N N/A	
3.2.1	**Side Access Aisle** **Length:** 7.4 m **Width:** 2.4 m (minimums) (see Figure 28)	Y N N/A	
3.2.1	**Vertical Clearance:** 3.6 m	Y N N/A	
3.2.1	**Path of Travel:** minimum of 1.8 m wide to nearest accessible entrance	Y N N/A	
3.2.1.1	**Vertical Signage** **Width**: 0.3 m by 0.6 m **Mount:** 1.5 m to 2.0 m high at centre (see Figure 29)	Y N N/A	

Note – this Checklist must be read in conjunction with the City of Ottawa's Accessible Design Standards Document, 2015. All figures referenced in this document can be found in the City's Accessible Design Standards document.

3. Exterior Paths of Travel

Where stairs are located on an accessible Exterior route or walkway, an alternative Accessible route is to be provided immediately adjacent to the stairs

This section applies to:

1) *Pedestrian routes that serve facility entrances*
2) *Pedestrian routes that serve as a connection between a site boundary and entrance into the site*
3) *Public Rights-of-Way*
4) *Ramps and Curb Ramps*

Standard Ref.	Requirements	Compliance	Comments
3.3.1	**Surface:** firm, stable and slip resistant	Y N N/A	
3.3.1	**Lighting:** Provide in accordance with Section 5.7 (Lighting)	Y N N/A	
3.3.2	**Path of travel:** minimum 1.8 m wide	Y N N/A	
3.3.3.1	**Running Slope:** 1:20 (5%) (maximum)	Y N N/A	
3.3.3.2	**Cross Slope:** 1:20 (2%) (maximum) where surface is concrete or asphalt. 1:10 (10%) in all other cases.	Y N N/A	
3.3.1	**Rest Area:** If width is less than 1.8 m, provided every 30 m along path of travel. Rest area to be 1.8 m by 1.8 m (minimums)	Y N N/A	
3.3.4	**Guards:** Provide when change in level is more than 0.6 m	Y N N/A	
2.1.4	**Gratings or Openings:** 13 mm (maximum) wide in direction of travel. Longest side, if rectangular, must be perpendicular with the direction of travel	Y N N/A	

Note – this Checklist must be read in conjunction with the City of Ottawa's Accessible Design Standards Document, 2015. All figures referenced in this document can be found in the City's Accessible Design Standards document.

4. Curb Ramps

A curb ramp provides a transition where there is a change in level between exterior path of travel and adjacent vehicular route

This section applies to:
1) *Pedestrian crossings at intersections*
2) *Parking spaces, passenger loading zones and related access aisles*
3) *Any other exterior route where there is a grade change.*

Standard Ref.	Requirements	Compliance	Comments
3.4.1	**Surface:** firm, stable and slip resistant	Y N N/A	
3.4.2	**Clear width:** 1.5 m (minimum), exclusive of flares	Y N N/A	
3.4.3	**Running Slope**: 1:12 (8.33%) (maximum)	Y N N/A	
3.4.3	**Cross Slope:** 1:50 (2%) (maximum) (see Figure 33b)	Y N N/A	
3.4.6	**Tactile Surface Walking Indicators (TWSI):** minimum depth of 610mm, at 150 mm to 200 mm from edge of curb (see 33b)	Y N N/A	
3.4.2.2	**Flared Side:** 1m wide; slope 1:15 to 1:10.	Y N N/A	

Note – this Checklist must be read in conjunction with the City of Ottawa's Accessible Design Standards Document, 2015. All figures referenced in this document can be found in the City's Accessible Design Standards document.

5. Ramps

Ramps are provided when the slope of a path of travel exceeds a gradient of 1:20 (5%)

Refer to the Ontario Building Code for all applied requirements for ramps.

For all ramp standards, see Figure 3

Standard Ref.	Requirements	Compliance	Comments
2.2.1.1	**Running Slope:** 1:15 (6.67%)	Y N N/A	
2.2.1.2	**Cross-Slope:** 1:50 (2%)	Y N N/A	
2.2.1	**Surface:** firm, stable and slip-resistant	Y N N/A	
2.2.1	**Clear Width:** 1.1 m (minimum)	Y N N/A	
2.2.1.4	**Colour Contrasting Strip:** to be provided at slope changes. 50 mm wide colour-contrasted and slip resistant strip equal to the width of the ramp	Y N N/A	
2.2.1	**Lighting:** provide in accordance with Section 5.7 (Lighting)	Y N N/A	
2.2.2	**Length:** 9 m, or less, or provide landing	Y N N/A	
2.2.2	**Landing:** to be provided at top, bottom or intermediate level, or where there is directional change. (see Figure 5)	Y N N/A	
2.2.3.1	**Handrail:** 865 to 965 mm high on both sides. **Clear width**: 1.1 m between handrails (see Figure 8)	Y N N/A	

Note – this Checklist must be read in conjunction with the City of Ottawa's Accessible Design Standards Document, 2015. All figures referenced in this document can be found in the City's Accessible Design Standards document.

6. Stairs

This section applies to stairs provided for exterior or interior environments

Refer to the Ontario Building Code for all applied requirements for stairs.

For all stair standards, see Figure 10

Standard Ref.	Requirements	Compliance	Comments
2.3	**Stairs:** where provided, an alternative accessible route is to be provided immediately adjacent, and may include a ramp or other accessible means of negotiating grade change	Y N N/A	Note which alternative to stairs is provided.
2.3.1	**Surface:** firm, stable and slip-resistant	Y N N/A	
2.3.1.1	**Tread:** 280 mm to 355 mm deep	Y N N/A	
2.3.1.1	**Riser:** 125 mm to 180 mm high	Y N N/A	
2.3.1	**Open Riser:** not permitted	Y N N/A	
2.3.1.2	**Nosing Projection:** 38 mm (maximum) (see Figure 10)	Y N N/A	
2.3.1.2	**Nosing Strip**: 50 mm deep, colour contrasted, at leading edge of tread and extending the full length of the tread	Y N N/A	
2.3.1.3	**Tactile Surface Walking Indicators (TWSI):** minimum of 610 mm deep, one tread back (see Figure 11)	Y N N/A	
2.3.1	**Lighting:** to be provided in accordance with Section 5.7	Y N N/A	
2.3.2.2	**Handrail:** 865 mm to 965 mm high on both sides. (see Figure 12)	Y N N/A	

Note – this Checklist must be read in conjunction with the City of Ottawa's Accessible Design Standards Document, 2015. All figures referenced in this document can be found in the City's Accessible Design Standards document.

7. Building Entrance

This section does not apply ☐

Standard Ref	Requirements	Compliance	Comments
4.1.1	**Provision:** at least one (1) accessible entrance 50% of the total number of building entrances (see Figure 36)	Y N N/A	
4.1.1	**Provision:** 50% of the total number of building entrances must be accessible (see Figure 36)	Y N N/A	
4.1.1	**Provision:** 30 m or less from nearest accessible parking space, or passenger loading or drop off zones	Y N N/A	

8. Benches and Seats

This section applies to
1) Rest areas and accessible routes
2) Outdoor public use eating areas
3) Waiting areas

Standard Ref	Requirements	Compliance	Comments
2.10.1	Seat height between 450 mm and 500 mm above finished floor (see Figure 23)	Y N N/A	
2.10.1	Seat depth between 330 mm and 510 mm	Y N N/A	
2.10.1	Back support extending 320 mm (minimum) above seat surface	Y N N/A	
2.10.1	Provide at least one (1) armrest at a height between 220 mm and 300 mm from the seat for additional support	Y N N/A	

Note – this Checklist must be read in conjunction with the City of Ottawa's Accessible Design Standards Document, 2015. All figures referenced in this document can be found in the City's Accessible Design Standards document.

High Performance Development Standard
Tier 1 Site Plan Checklist
Example

DRAFT

General Project Description

Project Name	
Contact	
Site Plan Control Application Subtype	
Proposed Total Gross Floor Area (m2)	
Total number residential units	
Building Use	
Total number residential units	

This document is for illustrative purposes only to provide projects context of the information that will be required to be submitted on the HPDS Checklist

1.1 **Energy Use**

Is the project a Complex Site Plan? (if no energy requirements are not required)	

	EUI	TEDI	GHGI
Residential Building	147	62	19
Office Building	142	42	19
Retail Building	132	52	12
Energy Intensity Required* (area weighted average in a mixed use building)			
Energy Intensity of Proposed Building			

Energy thresholds become mandatory June 1, 2023.

OR

	Required	Proposed
Proposed Building Energy Use		
Reference Building Energy Use		
Percent Improvement	25%	0

OR

Commitment to pursue certification program	
Reference to Drawing, Plans, or Report	

1.2 **Site Plan Accessibility**

Are the main entrances equally accessible to all users?	
Brief Description of how accessibility is achieve on the site	
Reference to Drawing, Plans, or Report	

Accessible Grate Design

	Maximum grate		Number of grates
Grates located on path of travel	13mm diameter		
Grates located away from path of travel	20x20mm or 10x40		
Has the requirement been met and identified on the plan?			
Reference to Drawing, Plans, or Report			

Alternately grates may be screened

High Performance Development Standard
Tier 1 Site Plan Checklist
Example

DRAFT

1.3 **Fresh Air Intake**

Is the project located within:

150 metres of a road with an average of 50,000 vehicles or more per day	
100 metres of road with an average of 15,000 vehicles or more per day	
100 metres of idling areas (this includes onsite idling areas)	
If answered yes to any of the above provide a brief description of how the site will protect outdoor amenity and fresh air intakes from these sources of air pollution.	
Reference to Drawing, Plans, or Report	

1.4 **Tree Planting**

	Required	Proposed
Total site area (m^2)		
Total Soil Volume (m3)	0	
Total number of planting areas (minimum of $30m^3$ soil)		
Total number of trees planted		

Requirement to come in effect with the release of tree planting guidelines.

Reference to Drawing, Plans, or Report

1.5

Plant Species	**Required (m^2)**	**Proposed (m^2)**	**Proposed %**
Total landscaped site area			
Landscaped site area planted with drought-tolerant plants (minimum 50%)	0		
Total number of plants			
Total number of native plants and % of total plants planted (minimum 50%)	0		

Reference to Drawing, Plans, or Report	

1.6 **Exterior Lighting**

All exterior lighting fixtures Dark Sky compliant	
Reference to Drawing, Plans, or Report	

1.7 **Bird Safe Design**

	Required (m^2)	**Proposed (m^2)**	**Proposed %**
Total area of glazing of all elevations within 12m above grade (including glass balcony railings)			
Total area of treated glazing (minimum 85% of total area of glazing within 12m above grade)	0		
Percentage of glazing within 12m above grade treated with:			
a) Low reflectance opaque materials			
b) Visual markers			
c) Shading			

Reference to Drawing, Plans, or Report	

High Performance Development Standard
Tier 1 Site Plan Checklist
Example

1.8 **Sustainable Roofing**

Does the project have a flat roof over 500 m2? If no project is not subject to cool roof requirement	Y/N

	Required (m^2)	Proposed (m^2)	Proposed %
Available Roof Space			
Available Roof Space provided as Green Roof			
Available Roof Space provided as Reflective Roof			
Available Roof Space designated Solar Ready If reflective roof path is chosen and roof area is over 2,500m2, Minimum 1,000m2 of solar ready area must be provided	1000		
Available Roof Space provided as Solar Panels			
Available Roof Space provided as Accessible Green Roof This is counted at 120% of area provided			
Available Roof Space provided as Food growing space This includes entire garden area included pathways and adjacent terraces			
Metric requirement met? (50% green, 90% white, or a combination of strategies amounting to 75%)	yes/no		
Reference to Drawing, Plans, or Report			

1.9 **Cool Landscape and Paving**

Industrial work yards or similar areas that limit the available options for shading or reflective surfaces may be excluded from the hard surface area calculation.

Projects must meet one of the following

	Required by Zoning (m2)	Proposed (m^2)	Proposed exceeding minimum %
Total non roof soft landscape area (minimum 20%)			

OR

	Required (m^2)	Proposed (m^2)	Proposed %
Total non-roof hardscape area			
Total non-roof hardscape area treated for Urban Heat Island (minimum 50%)			
Area of non-roof hardscape treated with:			
a) high-albedo surface material			
b) open-grid pavement			
c) shade from tree canopy			
d) shade from high-albedo structures			
e) shade from energy generation structures			
f) At grade parking lot area with more than 1 tree per 5 parking spaces			

Reference to Drawing, Plans, or Report	

High Performance Development Standard
Tier 1 Site Plan Checklist
Example

DRAFT

1.10. **Common Area Waste Storage**

	Required	Proposed
Total Waste Storage Area		
Garbage		
Recycling Paper		
Recycling Plastic Metal Glass		
Compost		
Reference to Drawing, Plans, or Report		

Construction Waste Management Plan Provided	
Reference to Drawing, Plans, or Report	

1.11 **Electric Vehicle Parking**

	None Required	Proposed
Number of Resident Parking Spaces		
Number of Visitor Parking Spaces		
Number of Commercial Parking Spaces		

Number of EV Ready Parking Spaces	

Reference to Drawing, Plans, or Report	

1.12 **Bike Access and Storage**

	Required by Zoning	Proposed
Number of Resident Bike Parking Spaces		
Number of Visitor Bike Parking Spaces		
Number of Commercial Bike Parking Spaces		

Does the bike parking plan meet accessibility, safety and proximity requirements?	
Reference to Drawing, Plans, or Report	

What is the High Performance Development Standard?

The High Performance Development Standard (HPDS) is a collection of mandatory and voluntary standards or "metrics" that raise the performance of new building projects to achieve "sustainable and resilient design" objectives. The HPDS consists of three tiers of performance. The standards, also known as 'metrics' in Tier 1 are mandatory. Tiers 2 and 3 contain higher level voluntary standards.

"Sustainable and resilient design is defined as "*Principles in site and building design to protect against the depletion of critical resources like energy, water, land, and raw materials, reduce greenhouse gas emissions, prevent environmental degradation throughout its life cycle, and create built environments that are liveable and comfortable while being safe and resilient to the impacts of a changing climate" (see new Official Plan, Section 13).*

What is the purpose of the HPDS?

Buildings are a major source of greenhouse gas emissions in Ottawa. Designing new buildings to be energy efficient from the outset will help reduce greenhouse gas emissions and save on costly retrofits in the future. The HPDS will also help build resiliency to our changing climate through tree canopy, ecology and urban heat island mitigation strategies.

Collectively, the metrics aim to advance the climate change mitigation and adaption priorities of the Climate Change Master Plan, Energy Evolution and the Climate Resiliency Strategy as well as the City's objectives related to public health, ecology and accessibility.

Tier 1 Metrics

Category	Energy	Health	Ecology	Resiliency	Waste	Transportation
Site Plan Tier 1	• Energy Efficiency	• Accessibility • Fresh Air Intake Location	• Tree Planting • Plant Species • Exterior Lighting • Bird Safe Design	• Sustainable Roofing • Cool Landscape and Paving	• Common Area Waste Storage	• Electric Vehicle Charging • Bike Parking
Plan of Subdivision Tier 1	• Community Energy Plan	N/A	• Tree Planting • Plant Species	• Community Energy Plan	N/A	N/A

What is the difference between a standard and other planning tools?

- A standard is a set of specific measures to which a proponent must implement to the fullest extent.
- Whereas a guideline is suggestive and general in nature, a standard is prescriptive and mandatory.
- Whereas the Zoning By-law sets out a separate process to review nonconformity through the Committee of Adjustment, relief from a standard is subject to the review and approval by the Department based on justification provided by the applicant through the development approval process.

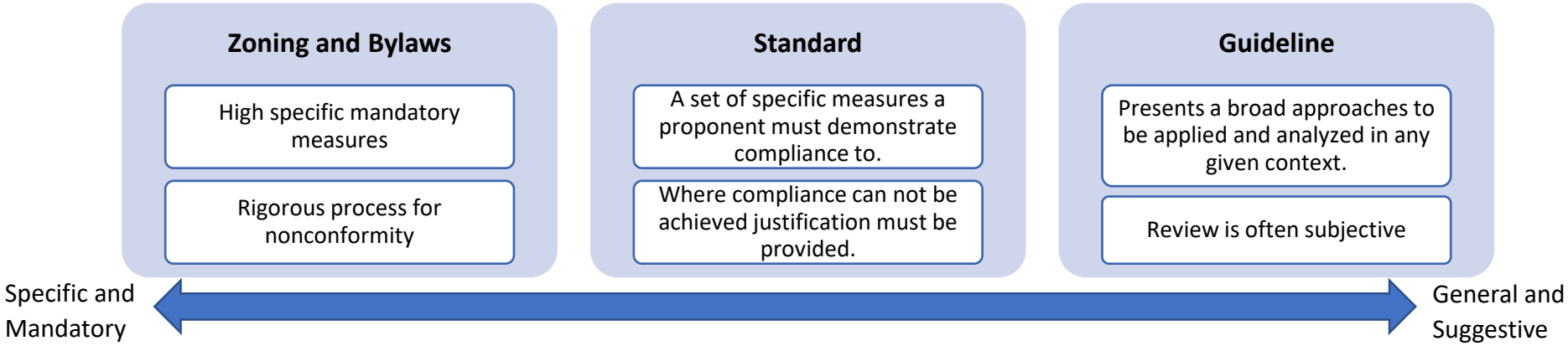

Some design elements may have criteria that are covered in all these tools where there are associated guidelines or bylaws the HPDS will reference these

Timing of requirements coming into effect

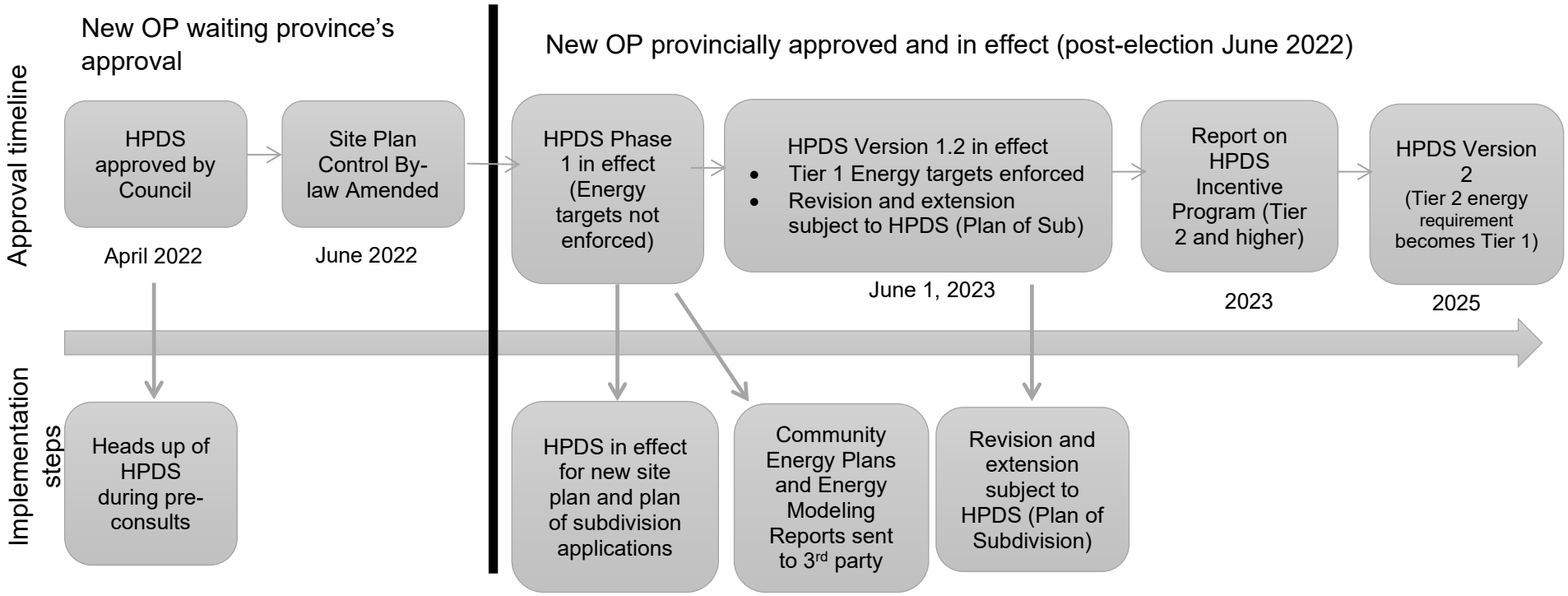

Frequently Asked Questions

1. When will the HPDS be fully implemented?

The HPDS is being rolled out in a phased approach as follows:

- Tier 1 (mandatory) building energy efficiency metrics will not apply until June 1, 2023 (i.e. Energy Modeling Reports will be "Report-Only" – see FAQ below)
- Tier 1 metrics will apply to applications for extension and revision of plan of subdivision effective June 1, 2023

- Tier 1 requirements for bike and electric vehicle parking will be proposed as part of the new Zoning By-law (post Official Plan adoption)
- The mandatory metrics are expected to be updated in 2025 and will come into effect in 2026.

2. What about ongoing applications?

We encourage projects, including those that have already been through pre-consultation or submitted an application, to comply with the HPDS. The HPDS will not apply to projects that have been through pre-consultation where the HPDS was not introduced OR are submitting an application prior to the new Official Plan receiving provincial approval. The HPDS will apply to applications for an extension or revision of draft plan approval (Plan of Subdivision) that are submitted on or after June 1, 2023.

3. How will the HPDS impact the Development Review process?

The HPDS will impact the development review process steps as follows:

	Site Plan applications	**Plan of Subdivision applications**
Pre-application Consultation	The HPDS will be flagged during the pre-application consultation for awareness. For Complex Site Plan applications, it is recommended that applicants engage an energy consultant at the same time as the building architectural drawings are being developed.	The HPDS will be flagged during the pre-application consultation for awareness. A new requirement is that a completed Community Energy Plan be submitted as a condition of draft approval. As indicated in the Terms of Reference, a letter is required at application submission which outlines the energy commitments and proposed energy strategy as well as confirmation of an established working group (as applicable).
Application Submission:	A completed HPDS Checklist is required at submission.	A completed HPDS Checklist is required at submission. Where a complete Community Energy Plan Report or Brief is not complete at time of application submission, projects are permitted to provide a letter which identifies the following project elements: • project partners, joint working group and key stakeholders • qualified professional completing the Community Energy Plan • proposed Community Energy Plan compliance pathway, prescriptive or a complete plan;

		• intended target level of performance for the community
Issue Resolution:	The File Lead will identify issues of non-conformity to the HPDS as part of the circulation comments. Following circulation, all resubmission packages shall include an updated HPDS Checklist. For Complex Site Plan applications, the resubmission package shall also include a draft Energy Modeling Report (EMR), which is to be sent for review by a third-party consultant.	The File Lead will identify issues of non-conformity to the HPDS as part of the circulation comments. Following circulation, all resubmission packages shall include an updated HPDS Checklist.
Approval / Post-approval:	The final EMR is submitted once the Delegated Authority Report (DAR) is prepared. The DAR will include conditions pertaining to the HPDS.	A completed Community Energy Plan is to be submitted as a condition of draft approval. The Delegated Authority Report (DAR) will include conditions pertaining to the HPDS.

4. What is the timing on incentives for Tier 2 projects?

There are currently no financial or process related incentives available to be implemented. Staff have been directed to investigate incentive options and report back to Council in 2023.

5. What does "Report Only" mean for Energy Modeling Reports submitted before June 1, 2023?

The term "Report Only" describes an interim period until June 1, 2023 when Tier 1 energy targets must be met. The "Report Only" period will help staff and industry become more familiar with energy modeling reports and how energy efficiency is to be reviewed during the approval process. It is also for industry to gain a better understanding of the types measures projects can apply to achieve energy targets.

6. Are deviations from the mandatory metrics permitted?

The expectation is for projects to demonstrate full compliance with the HPDS metrics. Where full compliance cannot be achieved, documentation will be required that provides sufficient justification why a deviation from the HPDS is necessary. Permission to deviate from the HPDS shall be subject to the review and approval of the GM, Planning, Real Estate and Economic Development Department. Example: A project has several separate roof spaces and is treating most of podium roof area which nearly meets the sustainable roofing requirement of the HPDS but to become in full compliance would have to treat the entire other roof area, resulting in significant cost.

7. Will the City provide training to the community on the HPDS?

Yes. More details are to be provided on training in Q3 2022. Until that time, specific questions should be directed to: hpds@ottawa.ca

Appendix F – Drawings

Existing Site Survey Plan by Annis O'Sullivan Vollebekk (1 Page)

Architectural Site Plan and Drawings (3 Pages)

Civil Drawings:

C000 – Existing Conditions and Removals Plan (Included Separately)

C001 – Notes and Details (Included Separately)

C100 – Site Servicing Plan (Included Separately)

C200 – Site Grading Plan (Included Separately)

C300 – Erosion and Sediment Control Plan (Included Separately)

C400 – Pre-Development Catchments (Included Separately)

C500 – Post-Development Catchments (Included Separately)

SURVEYOR'S REAL PROPERTY REPORT

PART 1 Plan of

LOTS 63 AND 65 REGISTERED PLAN 86 CITY OF OTTAWA

Surveyed by Annis, O'Sullivan, Vollebekk Ltd.

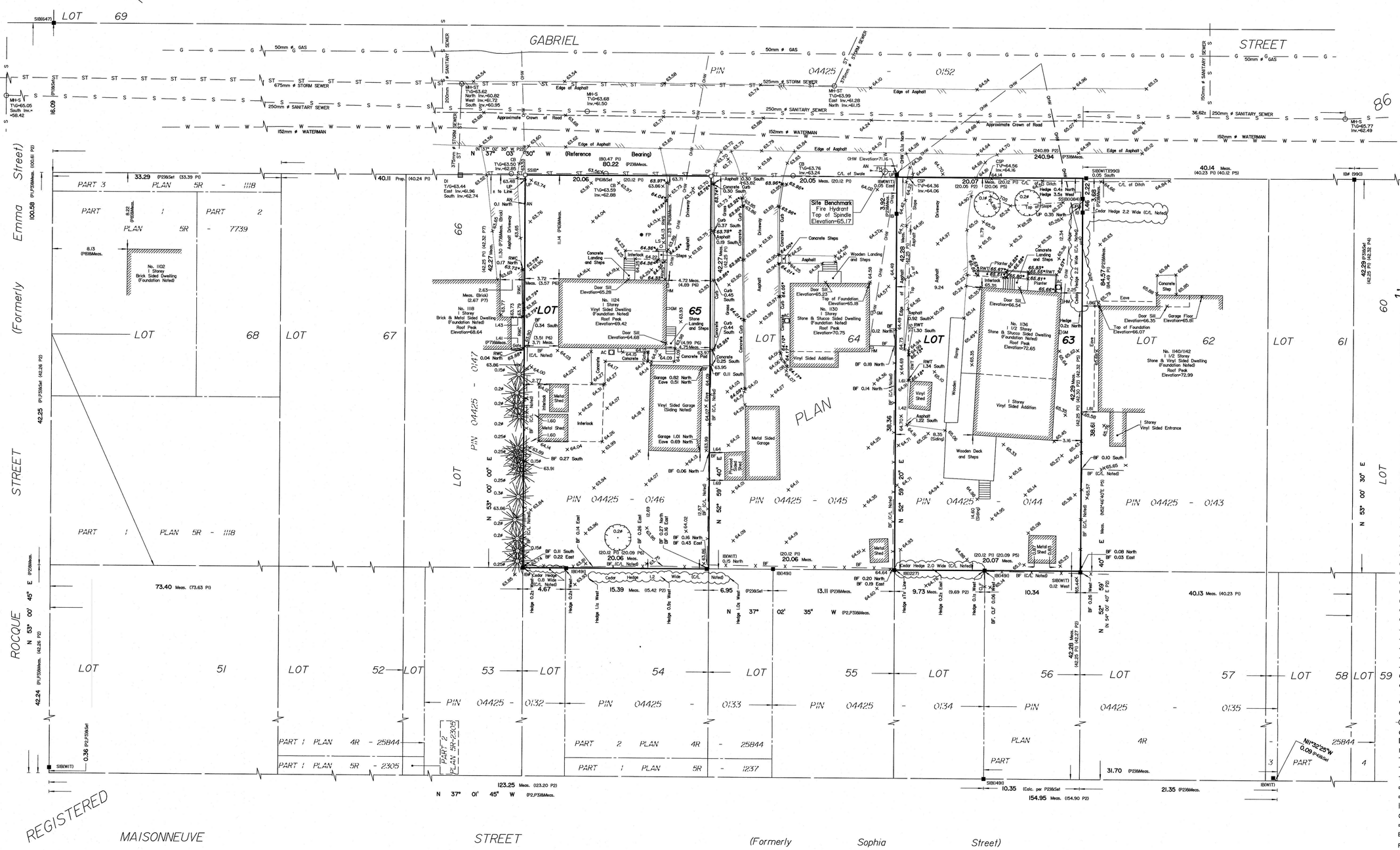

Scale 1 : 200

8.0 6.0 4.0 2.0 0 4 8 Metres

Metric

DISTANCES SHOWN ON THIS PLAN ARE IN METRES AND CAN BE CONVERTED TO FEET BY DIVIDING BY 0.3048

Surveyor's Certificate

I CERTIFY THAT :

1. This survey and plan are correct and in accordance with the Surveys Act and the Surveyors Act and the regulations made under them.
2. The survey was completed on the 27th day of June, 2023.

July 27, 2023 — Date

E. H. Herweyer
Ontario Land Surveyor

PART 2

THIS PLAN MUST BE READ IN CONJUNCTION WITH SURVEY REPORT DATED: July 27, 2023

ANNIS, O'SULLIVAN, VOLLEBEKK LTD. grants to 2701292 Ontario Ltd. (LOT 63) & 1702533 Ontario Inc. (LOT 65) ("The Client"), their solicitors, mortgagees, and other related parties, permission to use original, signed, sealed copies of the Surveyor's Real Property Report in transactions involving The Client.

Notes & Legend

Denotes		
—□—	"	Survey Monument Planted
—■—	"	Survey Monument Found
SIB	"	Standard Iron Bar
IB	"	Iron Bar
IBø	"	Round Iron Bar
CP	"	Concrete Pin
SSIB*	"	Short Standard Iron Bar (0.3 Long)
(WIT)	"	Witness
Meas.	"	Measured
Prop.	"	Proportioned
Calc.	"	Calculated
(AOG)	"	Annis, O'Sullivan, Vollebekk Ltd.
(P1)	"	Registered Plan 86
(P2)	"	Plan 4R-25844
(P3)	"	(AOG) Plan dated Aug. 25, 2016
(P4)	"	(990) Plan dated August 9, 1977
(P5)	"	(990) Plan dated August 21, 1974
(P6)	"	(990) Plan dated October 24, 1977
(P7)	"	(990) Plan dated December 9, 1982
(P8)	"	Plan 5R-1118
○ MH-ST	"	Maintenance Hole (Storm Sewer)
○ MH-S	"	Maintenance Hole (Sanitary)
—— ST ——	"	Underground Storm Sewer
—— S ——	"	Underground Sanitary Sewer
—— W ——	"	Underground Water
—— G ——	"	Underground Gas
—— OHW ——	"	Overhead Wires
○ CB	"	Round Catch Basin
○ UP	"	Utility Pole
∘ AN	"	Anchor
○ LS	"	Light Standard
CSP	"	Corrugated Steel Pipe
FH	"	Fire Hydrant
WV	"	Water Valve
DI	"	Ditch Inlet
Inv.	"	Invert
T/G	"	Top of Grate
T/P	"	Top of Pipe
TOS	"	Top of Slope
GM	"	Gas Meter
HM	"	Hydro Meter
AC	"	Air Conditioner
FP	"	Flag Pole
	"	Gate
BF	"	Board Fence
RWC	"	Concrete Retaining Wall
RWT	"	Timber Retaining Wall
Ø	"	Diameter
+ 65.00	"	Location of Elevations
+ 65.00*	"	Top of Concrete Curb and Retaining Wall Elevation
C/L	"	Centreline
	"	Deciduous Tree
	"	Coniferous Tree

ELEVATION NOTES

1. Elevations shown are derived from City of Ottawa monument No. 2016-0027 having an elevation 61.165 metres referred to the CGVD 28 geodetic datum.
2. It is the responsibility of the user of this information to verify that the job benchmark has not been altered or disturbed and that it's relative elevation and description agrees with the information shown on this drawing.

UTILITY NOTES

1. This drawing cannot be accepted as acknowledging all of the utilities and it will be the responsibility of the user to contact the respective utility authorities for confirmation.
2. Only visible surface utilities were located.
3. Underground utility information compiled from City of Ottawa utility sheet reference C-31-18, C-32-13, C-32-19, drawing No. 99-108-1 and drawing No. 980802-P1.
4. Sanitary and storm sewer grades and inverts were compiled from field measurements and city of Ottawa utility sheets.

LOT 63	Site Area = 848.8 sq.m.
LOT 65	Site Area = 847.8 sq.m.

Bearings are grid, derived from Can-Net 2016 Real Time Network GPS observations and are referenced to Specified Control Points 019196580184 and 0191984347 61, MTM Zone 9 (76°30' West Longitude) NAD-83 (original).

For bearing comparisons, a rotation of 0°00'55" clockwise was applied to bearings on plan P2, and a rotation of 0°02'10" clockwise was applied to bearings on plan P5.

ASSOCIATION OF ONTARIO LAND SURVEYORS
PLAN SUBMISSION FORM
V-53820

THIS PLAN IS NOT VALID UNLESS IT IS AN EMBOSSED ORIGINAL COPY ISSUED BY THE SURVEYOR In accordance with Regulation 1026, Section 29 (3).

© Annis, O'Sullivan, Vollebekk Ltd, 2023. "THIS PLAN IS PROTECTED BY COPYRIGHT"

ANNIS, O'SULLIVAN, VOLLEBEKK LTD.
14 Concourse Gate, Suite 500
Nepean, Ont. K2E 7S6
Phone: (613) 727-0850 / Fax: (613) 727-1079
Email: Nepean@aovltd.com
Ontario Land Surveyors

Job No. E-3509-23 C Lorrain Lts 63,65 PL 86 G, DJC F | ND

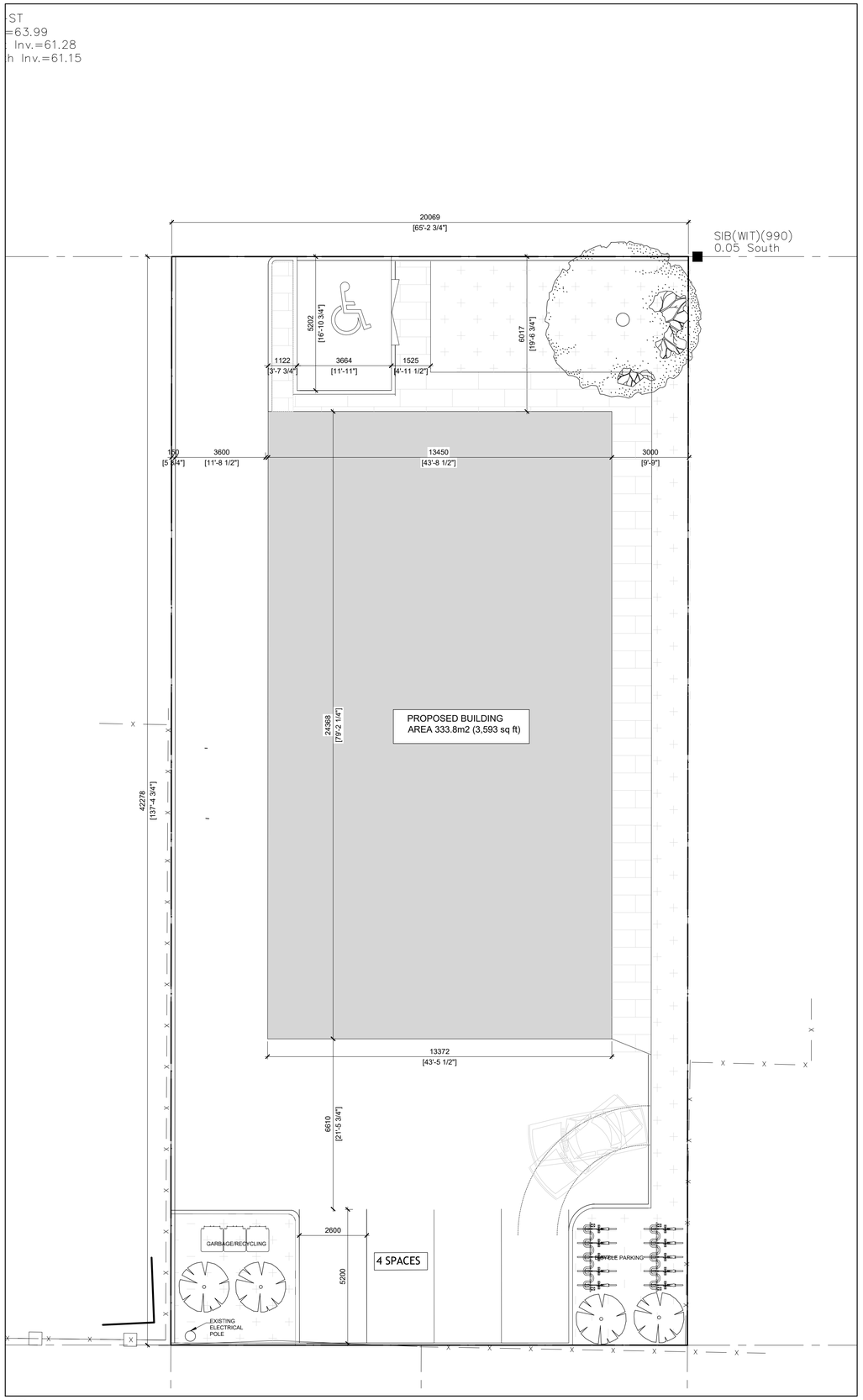

1 SITE PLAN
A-100 SCALE = 1 : 75

ZONE MECHANISM	ZONE PROVISION DEVELOPMENT	PROPOSED	IN COMPLIANCE (YES/NO)
MINIMUM LOT AREA (M²)	540 M²	848.5m2	YES
MINIMUM LOT WIDTH	18 M	20.70M	YES
MINIMUM FRONT YARD SETBACk	6 M	6 M	YES
MINIMUM PERCENTAGE OF LANDSCAPED AREA FOR LOT THAT CONTAINS APARTMENT DWELLING - MID-RISE, HIGH-RISE OR LOW-RISE, STACKED DWELLING, RETIREMENT HOME, OR PLANNED UNIT DEVELOPMENT	30%	25%	NO
MINIMUM CORNER SIDE YARD SETBACK (NOT APPLICABLE)	4.5 M	N/A	N/A
MINIMUM REAR YARD SETBACK	6M	6 M	YES
MINIMUM INTERIOR SIDE YARD SETBACK	3 M	3 M	YES
MAXIMUM BUILDING HEIGHT	15 M	14.8 M	YES
MAXIMUM FLOOR SPACE INDEX	NONE	N/A	N/A
MINIMUM WIDTH OF LANDSCAPED AREA AROUND A PARKING LOT (SECTION 110)	NONE (NOT ABUTTING A STREET)	NONE	YES
MINIMUM PARKING (SECTION 101)	0.5 PER DWELLING UNIT OVER 12 (4 REQUIRED)	5 SPACES	NO
MINIMUM BICYCLE PARKING (SECTION 111)	0.5 PER DWELLING UNIT (9 REQUIRED)	10 OUTDOOR	YES

GENERAL NOTES:

1. REFER TO SURVEY BY ANNIS, O'SULLIVAN, VOLLEBEKK LTD.
1. ALL GRADES TO MATCH EXISTING UNLESS OTHERWISE INDICATED ON SITE PLAN. NEW GRADES TO TIE INTO EXISTING GRADES.
2. CURBS AND LANDSCAPING SHOWN OUTSIDE OF PROPERTY LINE AND IN EXISTING NATURAL ZONE ARE SHOWN FOR INFORMATION PURPOSES ONLY. SITE VERIFICATION OF ALL CONDITIONS REQUIRED.
3. REFER TO LANDSCAPE ARCHITECT'S DRAWINGS FOR NEW LANDSCAPING AND TREE PRESERVATION.
4. ALL NOTES ARE AS PER CITY/ PROVINCIAL STANDARDS, GUIDELINES, BY-LAWS AND DETAIL DRAWINGS.

PROJECT INFORMATION

PROJECT: NEW LOW RISE STACKED APARTMENT DWELLING

MUNICIPAL ADDRESS: 1136 GABRIEL STREET, ORLEANS (OTTAWA), ON K1C 1K8

PIN:

ZONING USE: R5A - RESIDENTIAL ZONE 5, APARTMENT DWELLING, LOW RISE, STACKED

PROPOSED CONSTRUCTION: NEW 4 - STOREY BUILDING

PROPOSED USE: APARTMENT DWELLING, LOW RISE, STACKED

BUILDING HEIGHT: ± 14980m (± 491.5')

GROSS FLOOR AREA: 1,335.2m² (14,372 SQ FT)

SITE AREA: 848.5m2 (9,113 SQ FT)

PARKING STATISTICS:

STANDARD PARKING:
4 SPACES OF 2.6m W x 5.2m L
(8' - 7" W x 17' - 0" L)

ACCESSIBLE PARKING:
1 SPACE OF 3.66m W X 5.2m L
(12' - 0" W x 17' - 0" L)

TOTAL PARKING SPACES: 5

BICYCLE PARKING: 10 EXTERIOR
ABOVE GROUND:

LANDSCAPING:
REQUIRED 15% OF PARKING AREA

TOTAL PARKING AREA: 185.3 m²
15% LANDSCAPING REQUIRED: 27.75 m²

TOTAL LANDSCAPED AREAS PROVIDED: 218.7 m²

CLIENT

PROJECT NORTH

TRUE NORTH

SEAL

ARCHITECTURAL

LALANDE + DOYLE ARCHITECTS INC.
www.ldstud.com
Tel 613.233.2900
Fax 613.233.5008
159 Holland Ave
Ottawa, Ontario K1Y 0Y2

MECHANICAL + ELECTRICAL

STRUCTURAL

CIVIL

DATE	DESCRIPTION	ISSUE	REV.
2024/05/17	ISSUED FOR SPA	2	
2024/05/06	ISSUED FOR REVIEW	1	

PROJECT NAME

InHARMONY-NEMORIN DEVELOPMENT - GABRIEL

1136 Gabriel St, Ottawa, ON K1C 1K8

DRAWING TITLE

SITE PLAN

DATE 03-05-2024

PROJECT NO. 24-002

SCALE AS NOTED

DRAWN BY BR

REVIEWED BY PD

DRAWING NO. A-100

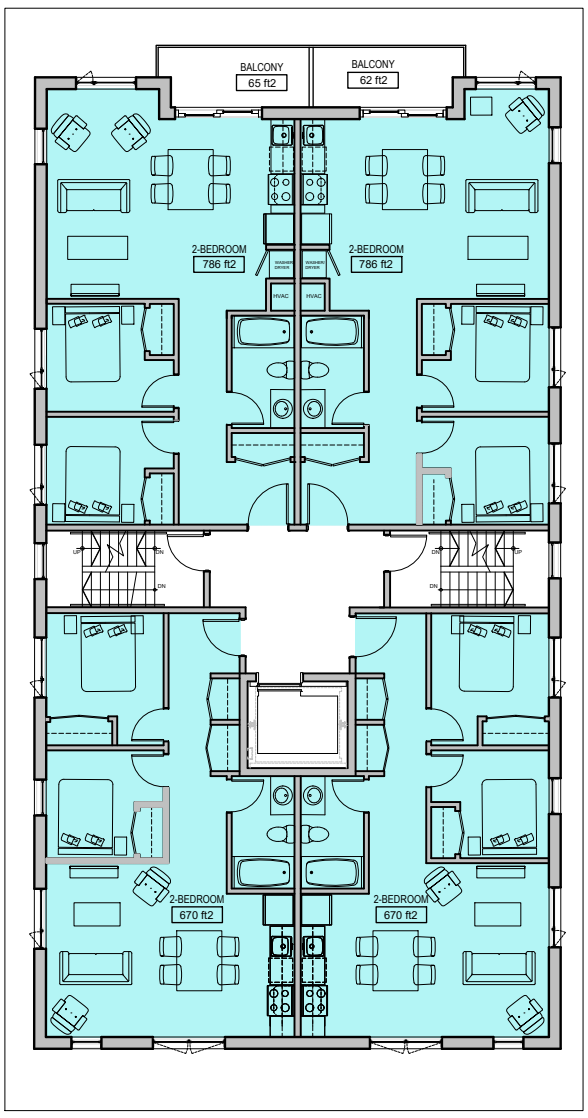

4 A1 THIRD FLOOR PLAN

SCALE = 1/16" = 1'-0"

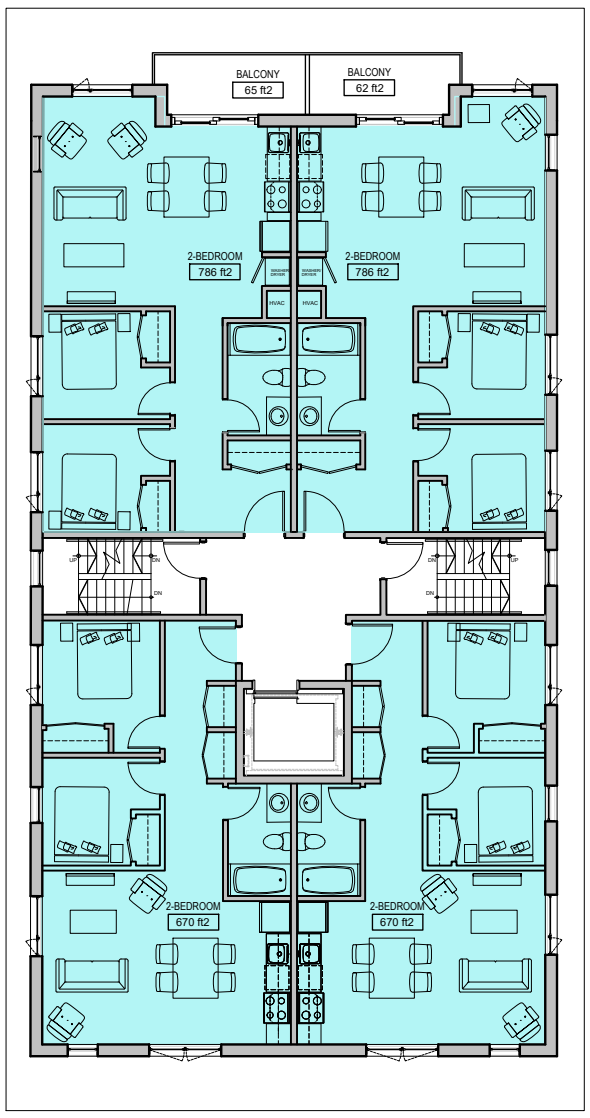

5 A1 FOURTH FLOOR PLAN

SCALE = 1/16" = 1'-0"

BASEMENT:
2 2-BED
1 STUDIO
1 STUDIO ACCESSIBLE

FIRST FLOOR:
2 2-BED
1 STUDIO
1 STUDIO ACCESSIBLE

SECOND FLOOR:
2 2-BED
1 1-BED ACCESSIBLE
1 2-BED

THIRD FLOOR:
4 2-BED

FOURTH FLOOR:
4 2-BED

TOTAL: 20 UNITS

- STUDIO
- STUDIO -ACCESSIBLE
- 1 BEDROOM ACCESSIBLE (574 ft2)
- 2-BEDROOM
- 2-BEDROOM ACCESSIBLE

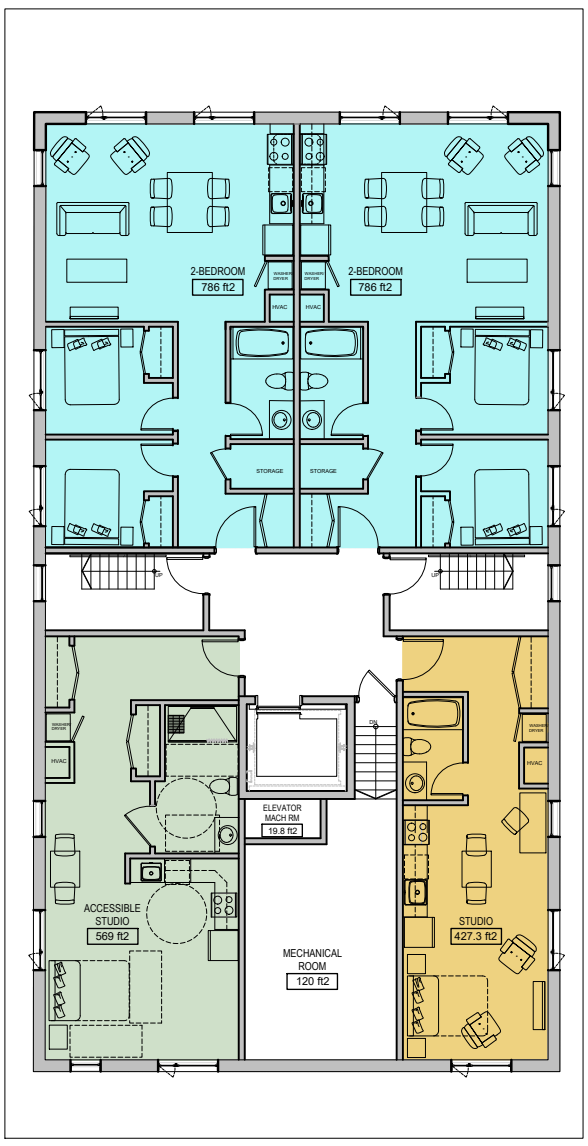

1 A1 BASEMENT FLOOR PLAN

SCALE = 1/16" = 1'-0"

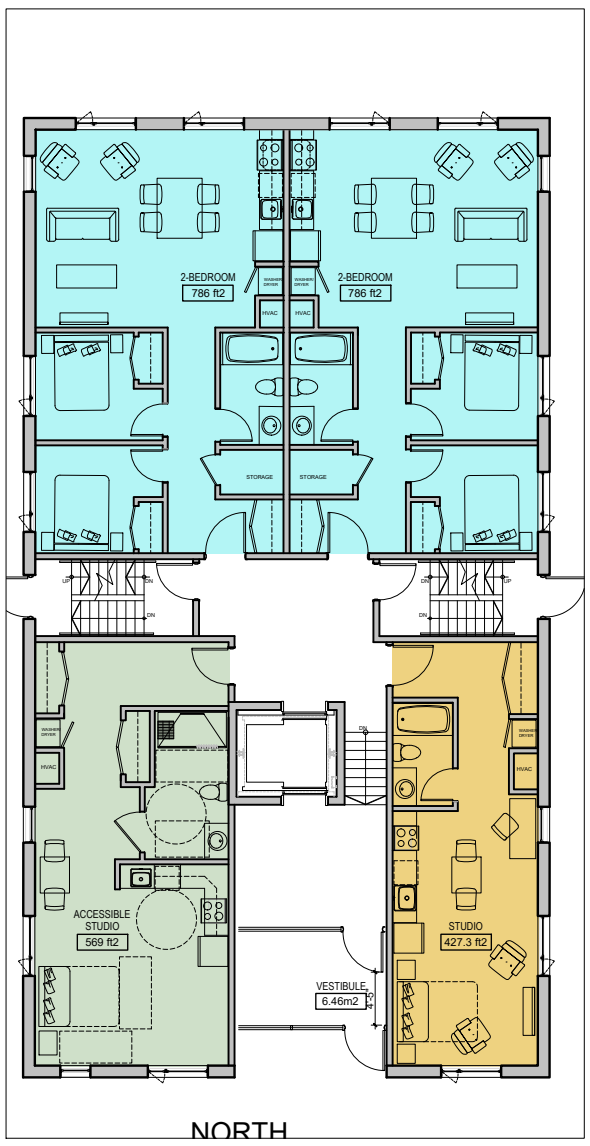

2 A1 FIRST FLOOR PLAN

SCALE = 1/16" = 1'-0"

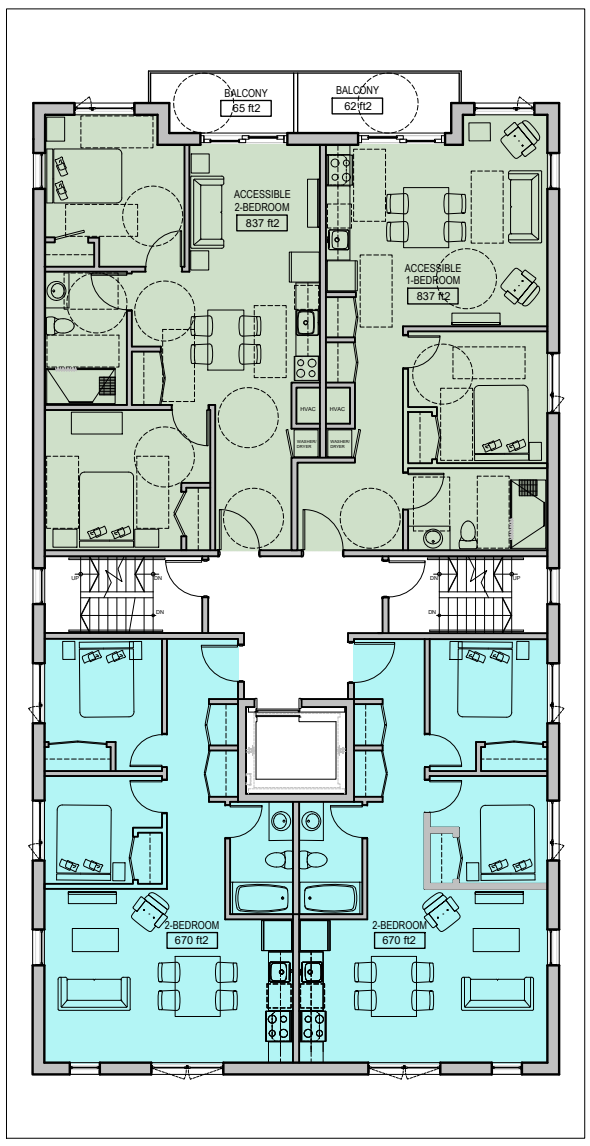

2 A1 SECOND FLOOR PLAN

SCALE = 1/16" = 1'-0"

(L+D)

LALANDE + DOYLE ARCHITECTS INC.
www.lplusd.com

Tel 613.233.2900
Fax 613.233.1008

400 - 207 Queen Street
Ottawa, Ontario K1P 6E5

PROJECT NAME
INHARMONY-NEMORIN
GABRIEL DEVELOPMENT

DRAWING TITLE
PROPOSED FLOOR PLANS
UPDATED 15/MAY/2024

DATE
03-05-2024

SCALE
1:200

PROJECT NO.
24.002

DRAWN BY

REVIEWED BY
LCL

DRAWING NO.
A1

1 A2 NORTH FACADE (FRONT)
SCALE = 1/16" = 1'-0"

2 A2 EAST FACADE (SIDE)
SCALE = 1/16" = 1'-0"

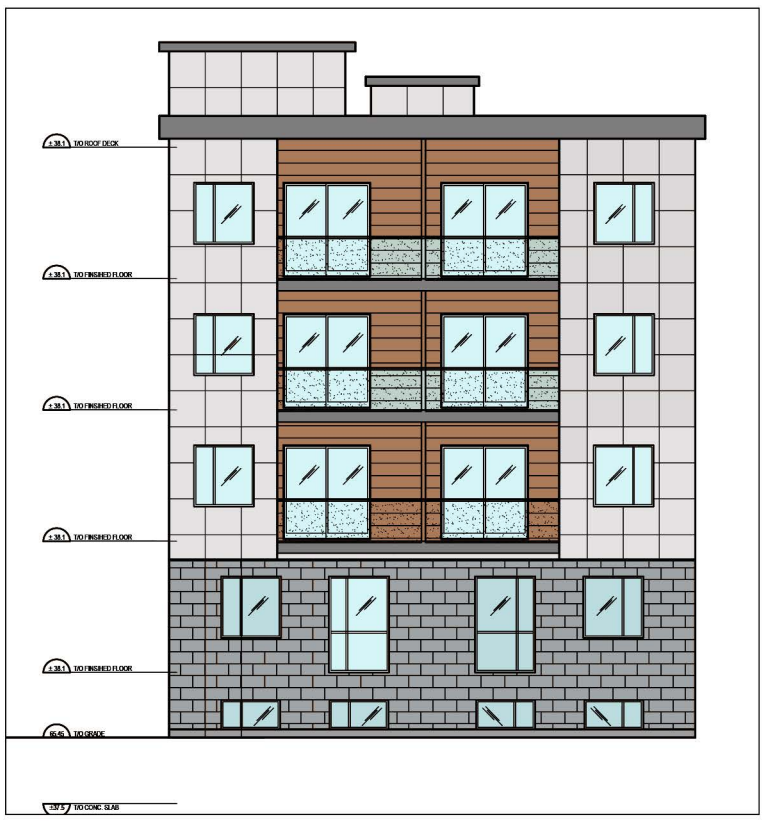

3 A2 SOUTH FACADE (REAR)
SCALE = 1/16" = 1'-0"

4 A2 WEST FACADE (SIDE)
SCALE = 1/16" = 1'-0"

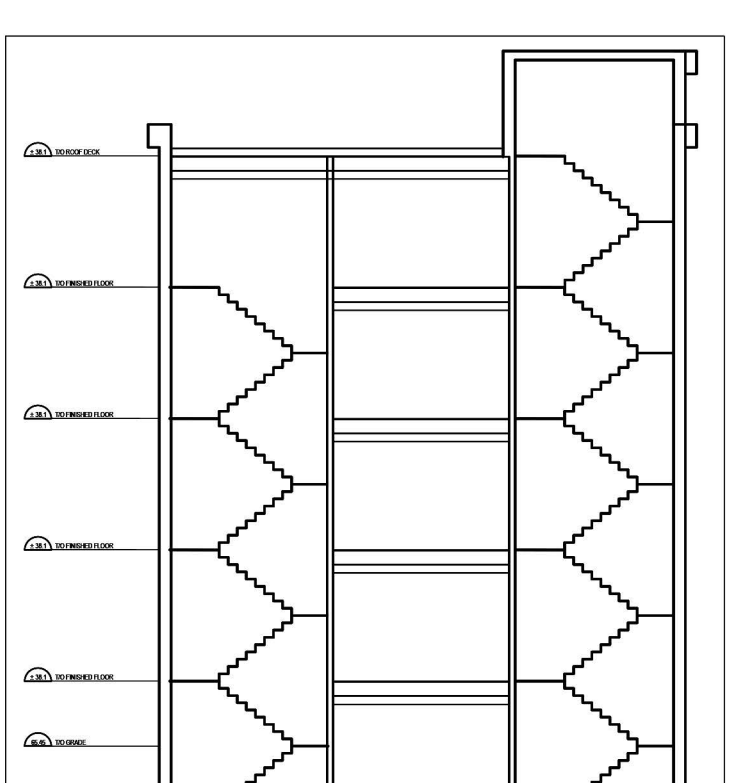

5 A2 CROSS-SECTION
SCALE = 1/16" = 1'-0"

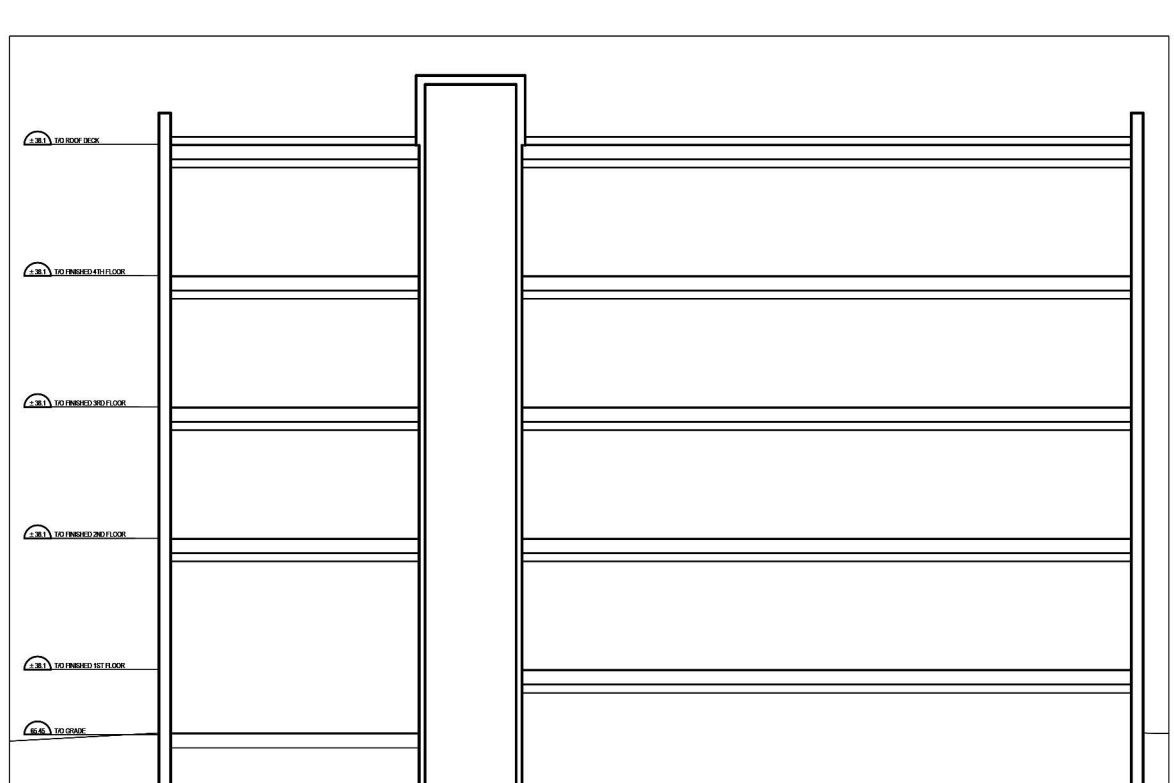

6 A2 LONGITUDINAL SECTION
SCALE = 1/16" = 1'-0"

(L+D)

LALANDE + DOYLE ARCHITECTS INC.
www.lplusd.com
Tel 613.233.2900
Fax 613.233.1008
400 - 207 Queen Street
Ottawa, Ontario K1P 6E5

PROJECT NAME
INHARMONY-NEMORIN
ST-PIERRE DEVELOPMENT

DRAWING TITLE
PROPOSED FLOOR PLANS
UPDATED 15MAY2024

DATE 16-04-2024
SCALE 1:200
PROJECT NO. 24.002
DRAWN BY
REVIEWED BY LCL
DRAWING NO. A2

Appendix G – ICD and Oil and Grit Seperator

Oil and Grit Separator - Stormceptor EF4 Detail

Oil and Grit Separator – Sizing Report

ICD – Hydrovex VHV/SVHV Selection Sheet

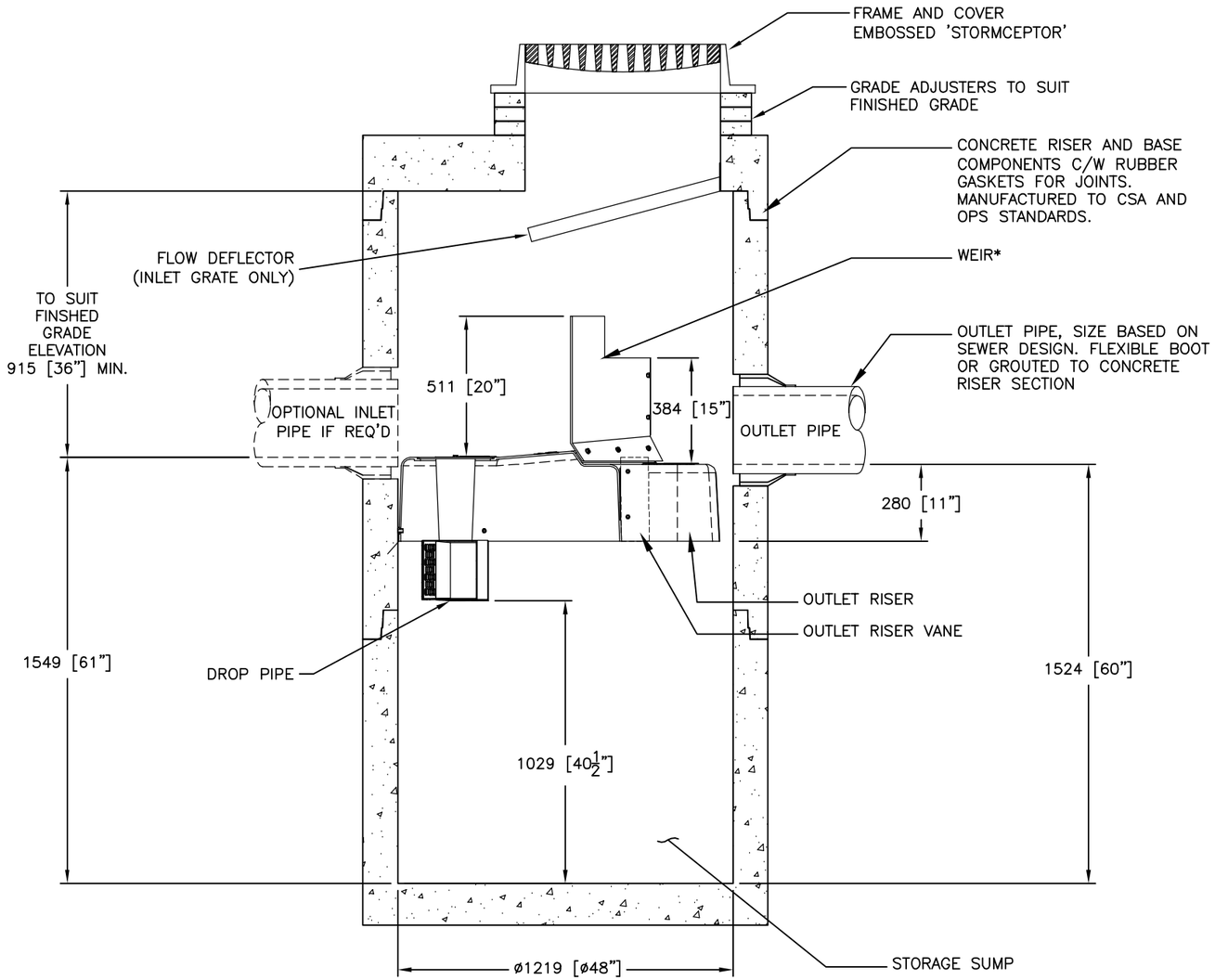

SECTION VIEW

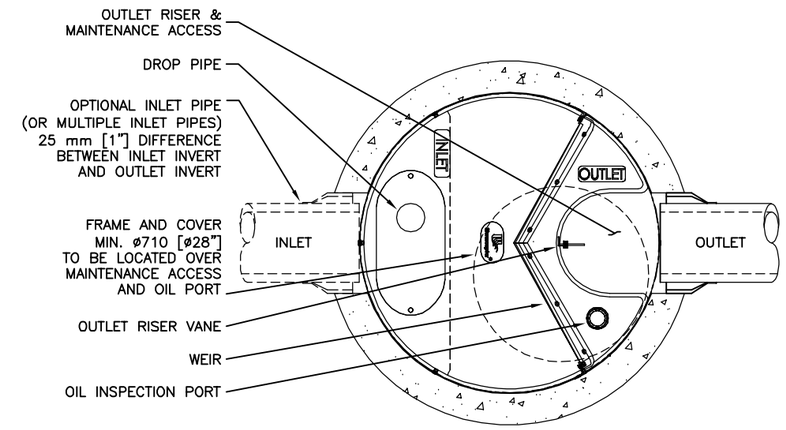

PLAN VIEW (STANDARD)

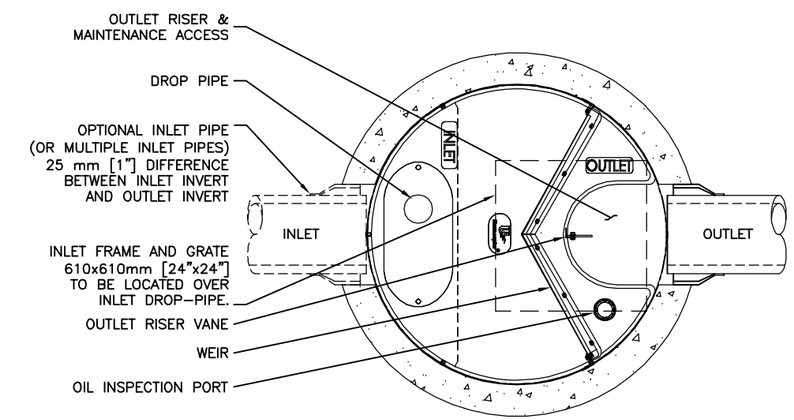

PLAN VIEW (INLET TOP)

FOR SITE SPECIFIC DRAWINGS PLEASE CONTACT YOUR LOCAL STORMCEPTOR REPRESENTATIVE. SITE SPECIFIC DRAWINGS ARE BASED ON THE BEST AVAILABLE INFORMATION AT THE TIME. SOME FIELD REVISIONS TO THE SYSTEM LOCATION OR CONNECTION PIPING MAY BE NECESSARY BASED ON AVAILABLE SPACE OR SITE CONFIGURATION REVISIONS. ELEVATIONS SHOULD BE MAINTAINED EXCEPT WHERE NOTED ON BYPASS STRUCTURE (IF REQUIRED).

GENERAL NOTES:

* MAXIMUM SURFACE LOADING RATE (SLR) INTO LOWER CHAMBER THROUGH DROP PIPE IS 1135 L/min/m^2 (27.9 gpm/ft^2) FOR STORMCEPTOR EF4 AND 535 L/min/m^2 (13.1 gpm/ft^2) FOR STORMCEPTOR EFO4 (OIL CAPTURE CONFIGURATION). WEIR HEIGHT IS 150 mm (6 INCH) FOR EF04.

1. ALL DIMENSIONS INDICATED ARE IN MILLIMETERS (INCHES) UNLESS OTHERWISE SPECIFIED.
2. STORMCEPTOR STRUCTURE INLET AND OUTLET PIPE SIZE AND ORIENTATION SHOWN FOR INFORMATIONAL PURPOSES ONLY.
3. UNLESS OTHERWISE NOTED, BYPASS INFRASTRUCTURE, SUCH AS ALL UPSTREAM DIVERSION STRUCTURES, CONNECTING STRUCTURES, OR PIPE CONDUITS CONNECTING TO COMPLETE THE STORMCEPTOR SYSTEM SHALL BE PROVIDED AND ADDRESSED SEPARATELY.
4. DRAWING FOR INFORMATION PURPOSES ONLY. REFER TO ENGINEER'S SITE/UTILITY PLAN FOR STRUCTURE ORIENTATION.
5. NO PRODUCT SUBSTITUTIONS SHALL BE ACCEPTED UNLESS SUBMITTED 10 DAYS PRIOR TO PROJECT BID DATE, OR AS DIRECTED BY THE ENGINEER OF RECORD.

INSTALLATION NOTES

A. ANY SUB-BASE, BACKFILL DEPTH, AND/OR ANTI-FLOTATION PROVISIONS ARE SITE-SPECIFIC DESIGN CONSIDERATIONS AND SHALL BE SPECIFIED BY ENGINEER OF RECORD.
B. CONTRACTOR TO PROVIDE EQUIPMENT WITH SUFFICIENT LIFTING AND REACH CAPACITY TO LIFT AND SET THE STRUCTURE (LIFTING CLUTCHES PROVIDED)
C. CONTRACTOR WILL INSTALL AND LEVEL THE STRUCTURE, SEALING THE JOINTS, LINE ENTRY AND EXIT POINTS (NON-SHRINK GROUT WITH APPROVED WATERSTOP OR FLEXIBLE BOOT)
D. CONTRACTOR TO TAKE APPROPRIATE MEASURES TO PROTECT THE DEVICE FROM CONSTRUCTION-RELATED EROSION RUNOFF.
E. DEVICE ACTIVATION, BY CONTRACTOR, SHALL OCCUR ONLY AFTER SITE HAS BEEN STABILIZED AND THE STORMCEPTOR UNIT IS CLEAN AND FREE OF DEBRIS.

STANDARD DETAIL
NOT FOR CONSTRUCTION

SITE SPECIFIC DATA REQUIREMENTS

STORMCEPTOR MODEL	EF4				
STRUCTURE ID					*
WATER QUALITY FLOW RATE (L/s)					*
PEAK FLOW RATE (L/s)					*
RETURN PERIOD OF PEAK FLOW (yrs)					*
DRAINAGE AREA (HA)					*
DRAINAGE AREA IMPERVIOUSNESS (%)					*
PIPE DATA:	I.E.	MAT'L	DIA	SLOPE %	HGL
INLET #1	*	*	*	*	*
INLET #2	*	*	*	*	*
OUTLET	*	*	*	*	*

* PER ENGINEER OF RECORD

MARK	DATE	REVISION DESCRIPTION	BY
####	####	####	####
####	####	####	####
####	####	####	####
1	6/8/18	UPDATES	JSK
0	5/26/17	INITIAL RELEASE	JSK

The design and information shown on this drawing is provided as a service to the project owner, engineer and contractor by Imbrium Systems ("Imbrium"). Neither this drawing, nor any part thereof, may be used, reproduced or modified in any manner without the prior written consent of Imbrium. Failure to comply is done at the user's own risk and Imbrium expressly disclaims any liability or responsibility for such use.

If discrepancies between the supplied information upon which the drawing is based and actual field conditions are encountered as site work progresses, these discrepancies must be reported to Imbrium immediately for re-evaluation of the design. Imbrium accepts no liability for designs based on missing, incomplete or inaccurate information supplied by others.

Stormceptor® EF

SCALE = NTS

imbrium®
7037 RIDGE ROAD, SUITE 350, HANOVER, MD 21076
USA 888-279-8628 CA 800-565-4801 INTL +1-410-560-590

DATE: 5/26/2017	
DESIGNED: JSK	DRAWN: JSK
CHECKED: BSF	APPROVED: SP
PROJECT No.: EF4	SEQUENCE No.: *
SHEET: 1 OF 1	

Stormceptor EF Sizing Report

Imbrium® Systems
ESTIMATED NET ANNUAL SEDIMENT (TSS) LOAD REDUCTION

08/01/2024

Province:	Ontario
City:	ottawa
Nearest Rainfall Station:	OTTAWA CDA RCS
Climate Station Id:	6105978
Years of Rainfall Data:	20

Project Name:	1136 Gabriel Street
Project Number:	24006874
Designer Name:	Aaditya Jariwala
Designer Company:	EXP Inc
Designer Email:	aaditya.jariwala@exp.com
Designer Phone:	613-816-5961
EOR Name:	
EOR Company:	
EOR Email:	
EOR Phone:	

Site Name:	1136 Gabriel Street
Drainage Area (ha):	0.04
Runoff Coefficient 'c':	0.68
Particle Size Distribution:	CA ETV
Target TSS Removal (%):	70.0
Required Water Quality Runoff Volume Capture (%):	90.00
Estimated Water Quality Flow Rate (L/s):	0.88
Oil / Fuel Spill Risk Site?	No
Upstream Flow Control?	No
Peak Conveyance (maximum) Flow Rate (L/s):	6.00
Influent TSS Concentration (mg/L):	200
Estimated Average Annual Sediment Load (kg/yr):	24
Estimated Average Annual Sediment Volume (L/yr):	20

Net Annual Sediment (TSS) Load Reduction Sizing Summary

Stormceptor Model	TSS Removal Provided (%)
EF4	70
EF6	70
EF8	70
EF10	70
EF12	70

Recommended Stormceptor EF Model:	**EF4**
Estimated Net Annual Sediment (TSS) Load Reduction (%):	**70**
Water Quality Runoff Volume Capture (%):	**> 90**

THIRD-PARTY TESTING AND VERIFICATION

►**Stormceptor® EF and Stormceptor® EFO** are the latest evolutions in the Stormceptor® oil-grit separator (OGS) technology series, and are designed to remove a wide variety of pollutants from stormwater and snowmelt runoff. These technologies have been third-party tested in accordance with the Canadian ETV **Procedure for Laboratory Testing of Oil-Grit Separators** and performance has been third-party verified in accordance with the **ISO 14034 Environmental Technology Verification (ETV)** protocol.

PERFORMANCE

►**Stormceptor® EF and EFO** remove stormwater pollutants through gravity separation and floatation, and feature a patent-pending design that generates positive removal of total suspended solids (TSS) throughout each storm event, including high-intensity storms. Captured pollutants include sediment, free oils, and sediment-bound pollutants such as nutrients, heavy metals, and petroleum hydrocarbons. Stormceptor is sized to remove a high level of TSS from the frequent rainfall events that contribute the vast majority of annual runoff volume and pollutant load. The technology incorporates an internal bypass to convey excessive stormwater flows from high-intensity storms through the device without resuspension and washout (scour) of previously captured pollutants. Proper routine maintenance ensures high pollutant removal performance and protection of downstream waterwavs.

PARTICLE SIZE DISTRIBUTION (PSD)

►The **Canadian ETV PSD** shown in the table below was used, or in part, for this sizing. This is the identical PSD that is referenced in the Canadian ETV ***Procedure for Laboratory Testing of Oil-Grit Separators*** for both sediment removal testing and scour testing. The Canadian ETV PSD contains a wide range of particle sizes in the sand and silt fractions, and is considered reasonably representative of the particle size fractions found in typical urban stormwater runoff.

Particle Size (μm)	Percent Less Than	Particle Size Fraction (μm)	Percent
1000	100	500-1000	5
500	95	250-500	5
250	90	150-250	15
150	75	100-150	15
100	60	75-100	10
75	50	50-75	5
50	45	20-50	10
20	35	8-20	15
8	20	5-8	10
5	10	2-5	5
2	5	<2	5

Rainfall Intensity (mm / hr)	Percent Rainfall Volume (%)	Cumulative Rainfall Volume (%)	Flow Rate (L/s)	Flow Rate (L/min)	Surface Loading Rate (L/min/m²)	Removal Efficiency (%)	Incremental Removal (%)	Cumulative Removal (%)
0.50	8.6	8.6	0.04	2.0	2.0	70	6.1	6.1
1.00	20.3	29.0	0.08	5.0	4.0	70	14.3	20.4
2.00	16.2	45.2	0.15	9.0	8.0	70	11.4	31.8
3.00	12.0	57.2	0.23	14.0	11.0	70	8.5	40.3
4.00	8.4	65.6	0.30	18.0	15.0	70	5.9	46.2
5.00	5.9	71.6	0.38	23.0	19.0	70	4.2	50.4
6.00	4.6	76.2	0.45	27.0	23.0	70	3.3	53.6
7.00	3.1	79.3	0.53	32.0	26.0	70	2.2	55.8
8.00	2.7	82.0	0.60	36.0	30.0	70	1.9	57.7
9.00	3.3	85.3	0.68	41.0	34.0	70	2.3	60.1
10.00	2.3	87.6	0.76	45.0	38.0	70	1.6	61.7
11.00	1.6	89.2	0.83	50.0	42.0	70	1.1	62.8
12.00	1.3	90.5	0.91	54.0	45.0	70	0.9	63.7
13.00	1.7	92.2	0.98	59.0	49.0	69	1.2	64.9
14.00	1.2	93.5	1.06	64.0	53.0	69	0.8	65.8
15.00	1.2	94.6	1.13	68.0	57.0	69	0.8	66.5
16.00	0.7	95.3	1.21	73.0	60.0	67	0.5	67.0
17.00	0.7	96.1	1.29	77.0	64.0	67	0.5	67.5
18.00	0.4	96.5	1.36	82.0	68.0	67	0.3	67.8
19.00	0.4	96.9	1.44	86.0	72.0	66	0.3	68.0
20.00	0.2	97.1	1.51	91.0	76.0	66	0.1	68.2
21.00	0.5	97.5	1.59	95.0	79.0	64	0.3	68.5
22.00	0.2	97.8	1.66	100.0	83.0	64	0.2	68.6
23.00	1.0	98.8	1.74	104.0	87.0	64	0.6	69.3
24.00	0.3	99.1	1.81	109.0	91.0	63	0.2	69.5
25.00	0.0	99.1	1.89	113.0	95.0	63	0.0	69.5
30.00	0.9	100.0	2.27	136.0	113.0	62	0.6	70.0
35.00	0.0	100.0	2.65	159.0	132.0	60	0.0	70.0
40.00	0.0	100.0	3.02	181.0	151.0	58	0.0	70.0
45.00	0.0	100.0	3.40	204.0	170.0	57	0.0	70.0
Estimated Net Annual Sediment (TSS) Load Reduction =								**70 %**

Climate Station ID: 6105978 *Years of Rainfall Data*: 20

RAINFALL DATA FROM OTTAWA CDA RCS RAINFALL STATION

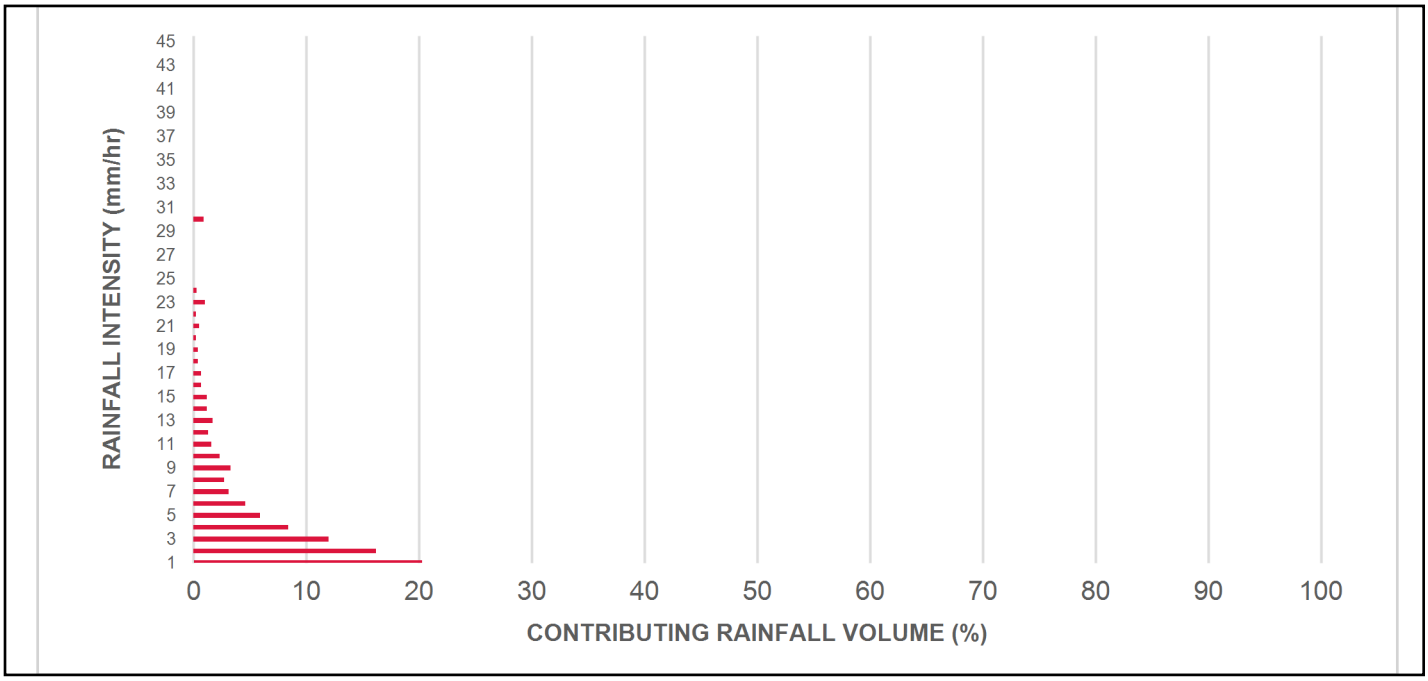

INCREMENTAL AND CUMULATIVE TSS REMOVAL FOR THE RECOMMENDED STORMCEPTOR® MODEL

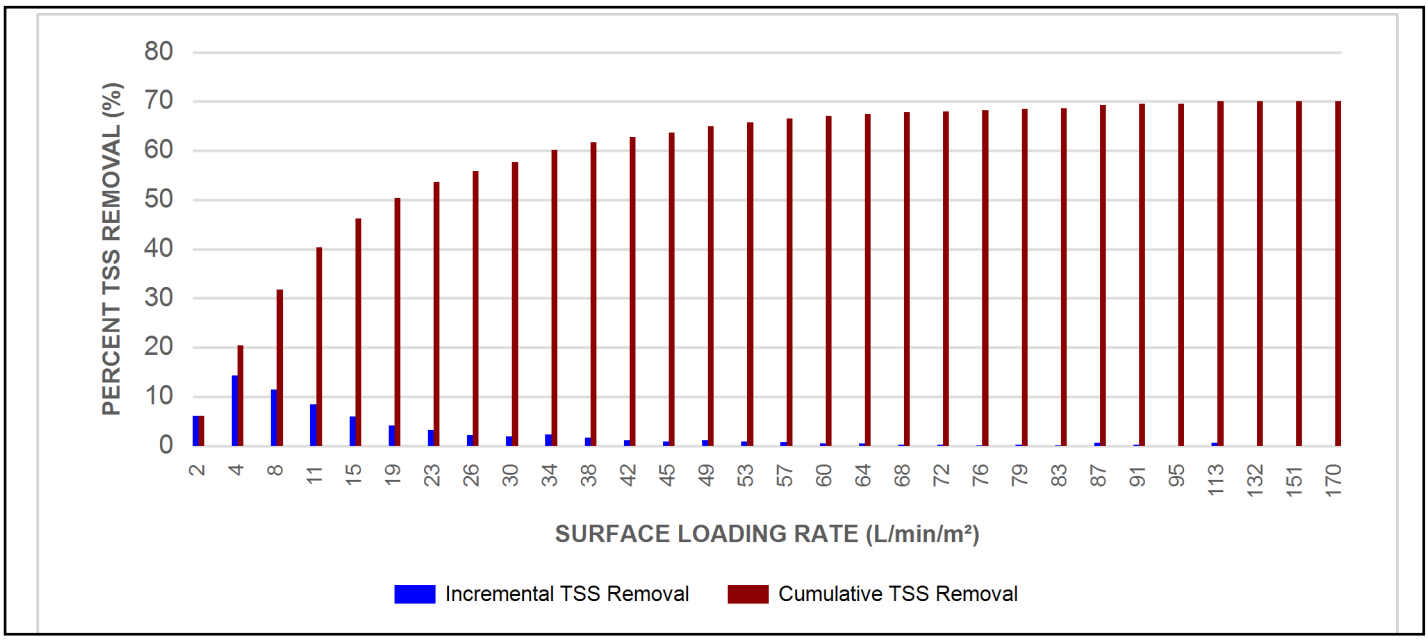

Maximum Pipe Diameter / Peak Conveyance

Stormceptor EF / EFO	Model Diameter		Min Angle Inlet / Outlet Pipes	Max Inlet Pipe Diameter		Max Outlet Pipe Diameter		Peak Conveyance Flow Rate	
	(m)	(ft)		(mm)	(in)	(mm)	(in)	(L/s)	(cfs)
EF4 / EFO4	1.2	4	90	609	24	609	24	425	15
EF6 / EFO6	1.8	6	90	914	36	914	36	990	35
EF8 / EFO8	2.4	8	90	1219	48	1219	48	1700	60
EF10 / EFO10	3.0	10	90	1828	72	1828	72	2830	100
EF12 / EFO12	3.6	12	90	1828	72	1828	72	2830	100

SCOUR PREVENTION AND ONLINE CONFIGURATION

►**Stormceptor® EF and EFO** feature an internal bypass and superior scour prevention technology that have been demonstrated in third-party testing according to the scour testing provisions of the Canadian ETV **Procedure for Laboratory Testing of Oil-Grit Separators**, and the exceptional scour test performance has been third-party verified in accordance with the ISO 14034 ETV protocol. As a result, Stormceptor EF and EFO are approved for online installation, eliminating the need for costly additional bypass structures, piping, and installation expense.

DESIGN FLEXIBILITY

►**Stormceptor® EF** and **EFO** offers design flexibility in one simplified platform, accepting stormwater flow from a single inlet pipe or multiple inlet pipes, and/or surface runoff through an inlet grate. The device can also serve as a junction structure, accommodate a 90-degree inlet-to-outlet bend angle, and can be modified to ensure performance in submerged conditions.

OIL CAPTURE AND RETENTION

►While Stormceptor® EF will capture and retain oil from dry weather spills and low intensity runoff, **Stormceptor® EFO** has demonstrated superior oil capture and greater than 99% oil retention in third-party testing according to the light liquid re-entrainment testing provisions of the Canadian ETV **Procedure for Laboratory Testing of Oil-Grit Separators**. Stormceptor EFO is recommended for sites where oil capture and retention is a requirement.

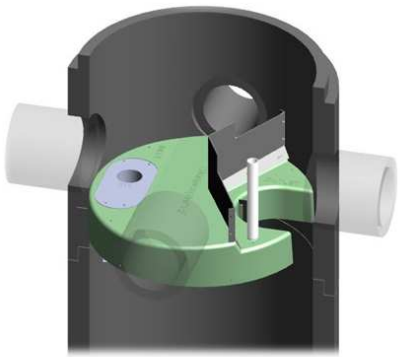

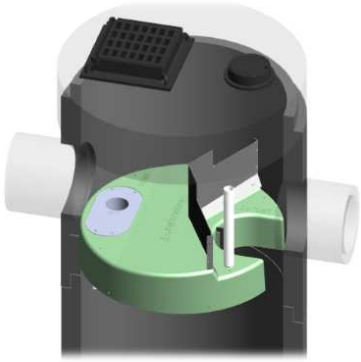

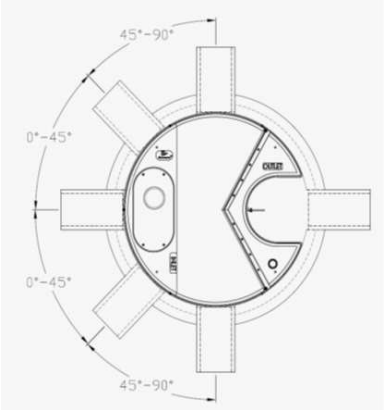

INLET-TO-OUTLET DROP

Elevation differential between inlet and outlet pipe inverts is dictated by the angle at which the inlet pipe(s) enters the unit.

0° - 45° : The inlet pipe is 1-inch (25mm) higher than the outlet pipe.

45° - 90° : The inlet pipe is 2-inches (50mm) higher than the outlet pipe.

HEAD LOSS

The head loss through Stormceptor EF is similar to that of a 60-degree bend structure. The applicable K value for calculating minor losses through the unit is 1.1. For submerged conditions the applicable K value is 3.0.

Pollutant Capacity

Stormceptor EF / EFO	Model Diameter		Depth (Outlet Pipe Invert to Sump Floor)		Oil Volume		Recommended Sediment Maintenance Depth *		Maximum Sediment Volume *		Maximum Sediment Mass **	
	(m)	(ft)	(m)	(ft)	(L)	(Gal)	(mm)	(in)	(L)	(ft³)	(kg)	(lb)
EF4 / EFO4	1.2	4	1.52	5.0	265	70	203	8	1190	42	1904	5250
EF6 / EFO6	1.8	6	1.93	6.3	610	160	305	12	3470	123	5552	15375
EF8 / EFO8	2.4	8	2.59	8.5	1070	280	610	24	8780	310	14048	38750
EF10 / EFO10	3.0	10	3.25	10.7	1670	440	610	24	17790	628	28464	78500
EF12 / EFO12	3.6	12	3.89	12.8	2475	655	610	24	31220	1103	49952	137875

*Increased sump depth may be added to increase sediment storage capacity

** Average density of wet packed sediment in sump = 1.6 kg/L (100 lb/ft³)

Feature	Benefit	Feature Appeals To
Patent-pending enhanced flow treatment and scour prevention technology	Superior, verified third-party performance	Regulator, Specifying & Design Engineer
Third-party verified light liquid capture and retention for EFO version	Proven performance for fuel/oil hotspot locations	Regulator, Specifying & Design Engineer, Site Owner
Functions as bend, junction or inlet structure	Design flexibility	Specifying & Design Engineer
Minimal drop between inlet and outlet	Site installation ease	Contractor
Large diameter outlet riser for inspection and maintenance	Easy maintenance access from grade	Maintenance Contractor & Site Owner

STANDARD STORMCEPTOR EF/EFO DRAWINGS

For standard details, please visit http://www.imbriumsystems.com/stormwater-treatment-solutions/stormceptor-ef

STANDARD STORMCEPTOR EF/EFO SPECIFICATION

For specifications, please visit http://www.imbriumsystems.com/stormwater-treatment-solutions/stormceptor-ef

Table of TSS Removal vs Surface Loading Rate Based on Third-Party Test Results
Stormceptor® EF

SLR (L/min/m²)	TSS % REMOVAL	SLR (L/min/m²)	TSS % REMOVAL	SLR (L/min/m²)	TSS % REMOVAL	SLR (L/min/m²)	TSS % REMOVAL
1	70	660	46	1320	48	1980	35
30	70	690	46	1350	48	2010	34
60	67	720	45	1380	49	2040	34
90	63	750	45	1410	49	2070	33
120	61	780	45	1440	48	2100	33
150	58	810	45	1470	47	2130	32
180	56	840	45	1500	46	2160	32
210	54	870	45	1530	45	2190	31
240	53	900	45	1560	44	2220	31
270	52	930	44	1590	43	2250	30
300	51	960	44	1620	42	2280	30
330	50	990	44	1650	42	2310	30
360	49	1020	44	1680	41	2340	29
390	48	1050	45	1710	40	2370	29
420	48	1080	45	1740	39	2400	29
450	48	1110	45	1770	39	2430	28
480	47	1140	46	1800	38	2460	28
510	47	1170	46	1830	37	2490	28
540	47	1200	47	1860	37	2520	27
570	46	1230	47	1890	36	2550	27
600	46	1260	47	1920	36	2580	27
630	46	1290	48	1950	35	2600	26

STANDARD PERFORMANCE SPECIFICATION FOR "OIL GRIT SEPARATOR" (OGS) STORMWATER QUALITY TREATMENT DEVICE

PART 1 – GENERAL

1.1 WORK INCLUDED

This section specifies requirements for selecting, sizing, and designing an underground Oil Grit Separator (OGS) device for stormwater quality treatment, with third-party testing results and a Statement of Verification in accordance with ISO 14034 Environmental Management – Environmental Technology Verification (ETV).

1.2 REFERENCE STANDARDS & PROCEDURES

ISO 14034:2016 Environmental management – Environmental technology verification (ETV)

Canadian Environmental Technology Verification (ETV) Program's **Procedure for Laboratory Testing of Oil-Grit Separators.**

1.3 SUBMITTALS

1.3.1 All submittals, including sizing reports & shop drawings, shall be submitted upon request with each order to the contractor then forwarded to the Engineer of Record for review and acceptance. Shop drawings shall detail all OGS components, elevations, and sequence of construction.

1.3.2 Alternative devices shall have features identical to or greater than the specified device, including: treatment chamber diameter, treatment chamber wet volume, sediment storage volume, and oil storage volume.

1.3.3 Unless directed otherwise by the Engineer of Record, OGS stormwater quality treatment product substitutions or alternatives submitted within ten days prior to project bid shall not be accepted. All alternatives or substitutions submitted shall be signed and sealed by a local registered Professional Engineer, based on the exact same criteria detailed in Section 3, in entirety, subject to review and approval by the Engineer of Record.

PART 2 – PRODUCTS

2.1 OGS POLLUTANT STORAGE

The OGS device shall include a sump for sediment storage, and a protected volume for the capture and storage of petroleum hydrocarbons and buoyant gross pollutants. The **minimum** sediment & petroleum hydrocarbon storage capacity shall be as follows:

2.1.1	4 ft (1219 mm) Diameter OGS Units:	1.19 m^3 sediment / 265 L oil
	6 ft (1829 mm) Diameter OGS Units:	3.48 m^3 sediment / 609 L oil
	8 ft (2438 mm) Diameter OGS Units:	8.78 m^3 sediment / 1,071 L oil
	10 ft (3048 mm) Diameter OGS Units:	17.78 m^3 sediment / 1,673 L oil
	12 ft (3657 mm) Diameter OGS Units:	31.23 m^3 sediment / 2,476 L oil

PART 3 – PERFORMANCE & DESIGN

3.1 GENERAL

The OGS stormwater quality treatment device shall be verified in accordance with ISO 14034:2016 Environmental management – Environmental technology verification (ETV). The OGS stormwater quality treatment device shall remove oil, sediment and gross pollutants from stormwater runoff during frequent wet weather events, and retain these pollutants during less frequent high flow wet weather events below the insert within the OGS for later removal during maintenance. The Manufacturer shall have at least ten (10) years of local experience, history and success in engineering design, manufacturing and production and supply of OGS stormwater quality treatment device systems, acceptable to the Engineer of Record.

3.2 SIZING METHODOLOGY

The OGS device shall be engineered, designed and sized to provide stormwater quality treatment based on treating a minimum of 90 percent of the average annual runoff volume and a minimum removal of an annual average 60% of the sediment (TSS) load based on the Particle Size Distribution (PSD) specified in the sizing report for the specified device. Sizing of the OGS shall be determined by use of a minimum ten (10) years of local historical rainfall data provided by Environment Canada. Sizing shall also be determined by use of the sediment removal performance data derived from the ISO 14034 ETV third-party verified laboratory testing data from testing conducted in accordance with the Canadian ETV protocol Procedure for Laboratory Testing of Oil-Grit Separators, as follows:

3.2.1 Sediment removal efficiency for a given surface loading rate and its associated flow rate shall be based on sediment removal efficiency demonstrated at the seven (7) tested surface loading rates specified in the protocol, ranging 40 L/min/m^2 to 1400 L/min/m^2, and as stated in the ISO 14034 ETV Verification Statement for the OGS device.

3.2.2 Sediment removal efficiency for surface loading rates between 40 L/min/m^2 and 1400 L/min/m^2 shall be based on linear interpolation of data between consecutive tested surface loading rates.

3.2.3 Sediment removal efficiency for surface loading rates less than the lowest tested surface loading rate of 40 L/min/m^2 shall be assumed to be identical to the sediment removal efficiency at 40 L/min/m^2. No extrapolation shall be allowed that results in a sediment removal efficiency that is greater than that demonstrated at 40 L/min/m^2.

3.2.4 Sediment removal efficiency for surface loading rates greater than the highest tested surface loading rate of 1400 L/min/m^2 shall assume zero sediment removal for the portion of flow that exceeds 1400 L/min/m^2, and shall be calculated using a simple proportioning formula, with 1400 L/min/m^2 in the numerator and the higher surface loading rate in the denominator, and multiplying the resulting fraction times the sediment removal efficiency at 1400 L/min/m^2.

The OGS device shall also have sufficient annual sediment storage capacity as specified and calculated in Section 2.1.

3.3 CANADIAN ETV or ISO 14034 ETV VERIFICATION OF SCOUR TESTING

The OGS device shall have Canadian ETV or ISO 14034 ETV Verification of third-party scour testing conducted in accordance with the Canadian ETV Program's **Procedure for Laboratory Testing of Oil-Grit Separators.**

3.3.1 To be acceptable for on-line installation, the OGS device must demonstrate an average scour test effluent concentration less than 10 mg/L at each surface loading rate tested, up to and including 2600 L/min/m^2.

®HYDROVEX®

VHV/SVHV Vortex Flow Regulator

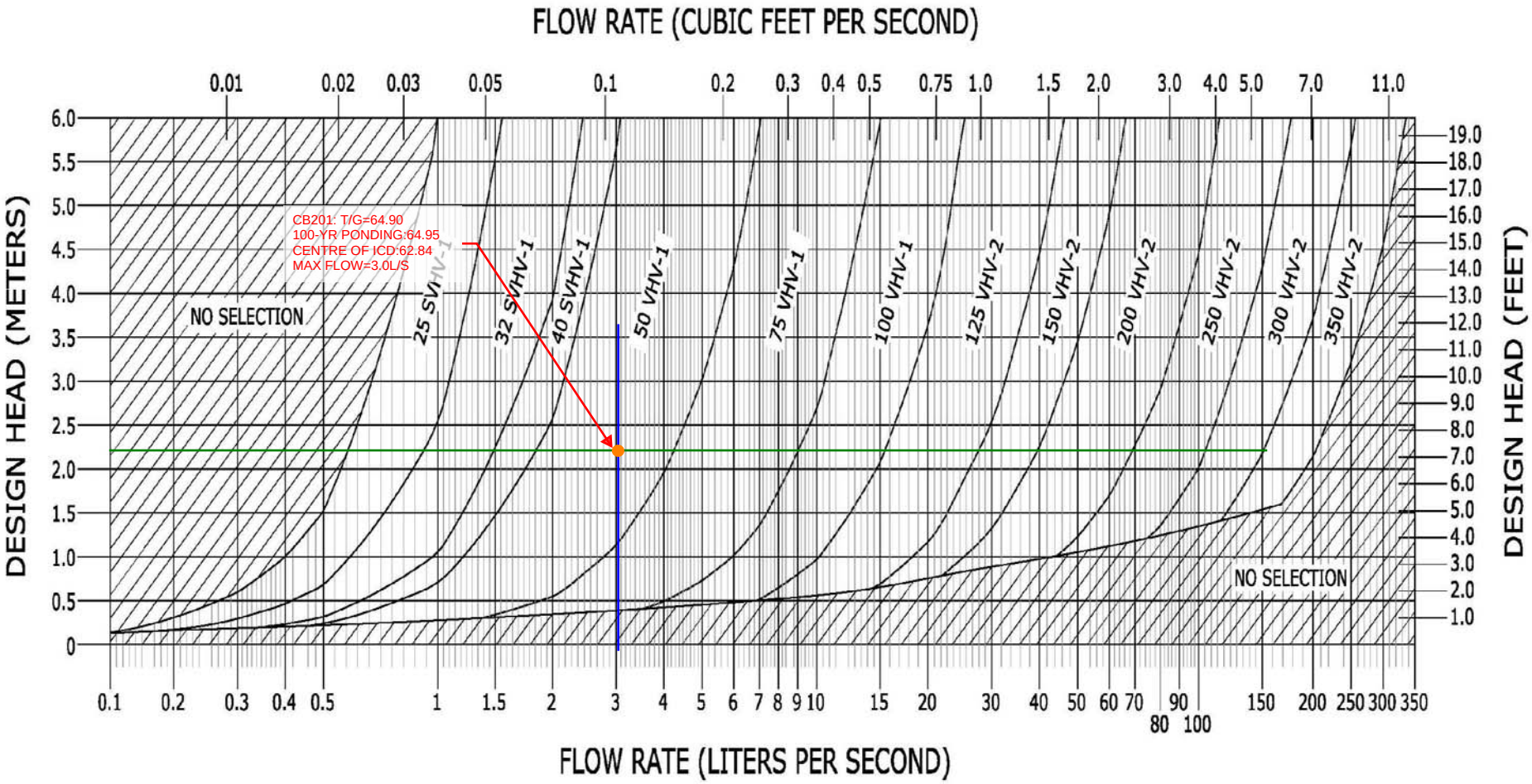

FIGURE 3

JOHN MEUNIER