GENERAL NOTES:

1. ALL WORKS AND MATERIALS SHALL CONFORM TO THE LATEST REVISIONS OF THE STANDARDS AND SPECIFICATIONS OF THE CITY OF OTTAWA, ONTARIO PROVINCIAL STANDARD DRAWINGS (OPSD) AND SPECIFICATIONS (OPSS), WHERE APPLICABLE.
2. THE LOCATION OF UTILITIES IS APPROXIMATE ONLY, AND THE EXACT LOCATION SHOULD BE DETERMINED BY CONSULTING THE MUNICIPAL AUTHORITIES AND UTILITY COMPANIES CONCERNED. THE CONTRACTOR IS RESPONSIBLE TO PROVIDE THE LOCATION AND STATUS OF UTILITIES AND SHALL BE RESPONSIBLE FOR ADEQUATE PROTECTION OF PLANT AND EQUIPMENT FROM DAMAGE. THE CONTRACTOR SHALL BE RESPONSIBLE FOR REPAIR OR REPLACEMENT OF ANY SERVICES OR UTILITIES DISTURBED DURING CONSTRUCTION, TO THE SATISFACTION OF THE AUTHORITY HAVING JURISDICTION.
3. THE CONTRACTOR SHALL VERIFY THE LOCATION AND ELEVATION OF EXISTING SERVICES PRIOR TO ANY CONSTRUCTION. THE CONTRACTOR SHALL CONFIRM LOCATIONS AND ELEVATIONS OF EXISTING SERVICES AND STRUCTURES TO BE CONNECTED TO AND EXISTING SERVICES THAT MAY BE DAMAGED OR CAUSE CONFLICTS PRIOR TO CONSTRUCTION OF ANY NEW SEWER, WATER AND/OR STORM WATER WORKS. ALL DIMENSIONS SHALL BE CHECKED AND VERIFIED IN THE FIELD BY THE CONTRACTOR PRIOR TO THE START OF CONSTRUCTION. ANY DISCREPANCIES, INTERPRETATIONS, CHANGES AND ADDITIONS TO THESE DRAWINGS MUST BE BROUGHT TO THE ATTENTION OF THE ENGINEER, WHEN NOTED AND BEFORE PROCEEDING WITH CONSTRUCTION WORKS. DO NOT CONTINUE CONSTRUCTION IN AREAS WHERE DISCREPANCIES APPEAR UNTIL SUCH DISCREPANCIES HAVE BEEN RESOLVED.
4. ALL ELEVATIONS ARE GEODETIC AND UTILIZE METRIC UNITS. ALL DIMENSIONS ARE IN METRES UNLESS OTHERWISE SPECIFIED. ALL DRAWINGS SHOULD NOT BE SCALED BY THE CONTRACTOR. ANY MISSING OR QUESTIONABLE DIMENSIONS ARE TO BE CONFIRMED WITH THE ENGINEER IN WRITING.
5. THE CONTRACTOR SHALL BE RESPONSIBLE FOR OBTAINING ALL PERMITS REQUIRED AND BEAR COST OF THE SAME.
6. ALL WORK SHALL BE COMPLETED IN ACCORDANCE WITH THE "OCCUPATIONAL HEALTH AND SAFETY ACT AND REGULATIONS FOR CONSTRUCTION PROJECTS", THE GENERAL CONTRACTOR SHALL BE DEEMED TO BE THE CONSTRUCTOR AS DEFINED IN THE ACT.
7. CONTRACTOR SHALL BE RESPONSIBLE FOR ALL EXCAVATION, BACKFILL AND REINSTATEMENT OF ALL AREAS DISTURBED DURING CONSTRUCTION TO THE SATISFACTION OF THE ENGINEER, THE CITY OF OTTAWA AND THE AUTHORITY HAVING JURISDICTION.
8. ANY AREAS BEYOND THE LIMIT OF THE SITE DISTURBED DURING CONSTRUCTION SHALL BE RESTORED TO ORIGINAL CONDITION OR BETTER TO THE SATISFACTION OF THE AUTHORITY HAVING JURISDICTION AT THE CONTRACTOR'S EXPENSE.
9. THE CONTRACTOR SHALL COMPLY WITH THE CITY OF OTTAWA REQUIREMENTS FOR TRAFFIC CONTROL WHEN WORKING ON CITY STREETS. ALL CONSTRUCTION SIGNAGE MUST CONFORM TO THE M.T.O. BOOK 7 AND T.A.C MANUAL OF UNIFORM TRAFFIC CONTROL DEVICES (LATEST AMENDMENT).
10. THE SUPPORT OF ALL UTILITIES SHALL BE IN ACCORDANCE WITH THE REQUIREMENTS OF THE AUTHORITY HAVING JURISDICTION.
11. THERE WILL BE NO SUBSTITUTION OF MATERIALS UNLESS WRITTEN APPROVAL BY THE ENGINEER HAS BEEN OBTAINED.
12. EXCESS EXCAVATED MATERIAL SHALL BE REMOVED FROM THE SITE.
13. THE SITE LAYOUT IS THE RESPONSIBILITY OF THE CONTRACTOR. AS-BUILT SITE SERVICING & GRADING DRAWINGS SHALL BE MAINTAINED ON SITE BY THE CONTRACTOR.
14. THE CONTRACTOR WILL BE RESPONSIBLE FOR ADDITIONAL BEDDING OR ADDITIONAL STRENGTH PIPE IF THE MAXIMUM TRENCH WIDTH, AS SPECIFIED BY OPSD, IS EXCEEDED.
15. ALL NECESSARY CLEARING AND GRUBBING SHALL BE COMPLETED AY THE CONTRACTOR. REVIEW WITH ENGINEER AND THE CITY OF OTTAWA PRIOR TO ANY TREE CUTTING.
16. ALL EDGES OF DISTURBED PAVEMENT SHALL BE SAW CUT TO FORM A NEAT AND STRAIGHT LINE PRIOR TO PLACING NEW PAVEMENT.
17. ALL BOREHOLES SHOWN ON THE DRAWINGS ARE FOR INFORMATION ONLY. FOR GEOTECHNICAL INFORMATION REFER TO GEOTECHNICAL INVESTIGATION REPORT PREPARED BY EXP. SERVICES INC. DATED OCTOBER 16, 2024.
18. THE CONTRACTOR SHALL APPRAISE HIS/HER SELF OF ALL SURFACE AND SUBSURFACE CONDITIONS TO BE ENCOUNTERED AND SHALL CARRY OUT THEIR OWN TEST PITS AS REQUIRED TO MAKE THEIR OWN INDEPENDENT ASSESSMENT OF GROUND CONDITIONS. THE CONTRACTOR SHALL NOT MAKE ANY CLAIM FOR ANY EXTRA COST DUE TO ANY SUCH GROUND CONDITIONS VARYING FROM THOSE ANTICIPATED BY THE CONTRACTOR.
19. DO NOT CONSTRUCT USING DRAWINGS THAT ARE NOT MARKED "ISSUED FOR CONSTRUCTION".
20. FOR TOPOGRAPHICAL INFORMATION REFER TO PLAN PREPARED BY ANNIS O'SULLIVAN VOLLEBEK. DATED JULY 13, 2023.
21. CIVIL DRAWINGS TO BE READ IN CONJUNCTION WITH ARCHITECTURAL, LANDSCAPE AND LEGAL DRAWINGS.
22. ALL NECESSARY CLEARING AND GRUBBING SHALL BE COMPLETED BY THE CONTRACTOR. REVIEW WITH CONTRACT ADMINISTRATOR AND THE CITY OF OTTAWA PRIOR TO ANY TREE CUTTING.
23. STREET LIGHTING SHALL BE TO CITY OF OTTAWA STANDARDS.

SANITARY SEWER NOTES

1. ALL SANITARY SEWER MATERIALS AND INSTALLATION SHALL CONFORM TO THE LATEST REVISIONS OF THE STANDARDS AND SPECIFICATIONS OF THE CITY OF OTTAWA, ONTARIO PROVINCIAL STANDARD DRAWINGS (OPSD) AND SPECIFICATIONS (OPSS).
2. ALL SANITARY SEWERS SHALL BE PVC SDR 35, IPEX "RING-TITE" (OR EQUIVALENT), AS PER CSA STANDARD 8182.2 OR LATEST AMENDMENT, UNLESS OTHERWISE NOTED.
3. SANITARY SEWER TRENCH AND BEDDING SHALL BE AS PER CITY OF OTTAWA STD. S6 AND S7, CLASS 'B BEDDING UNLESS OTHERWISE NOTED.
4. ALL SANITARY LATERALS ARE TO BE PVC SDR 28, IPEX "RING-TITE" (OR EQUIVALENT). ANY COLOR EXCEPT WHITE AND MARKED WITH A 50MM X 100MM WOODEN MARKER, EXTENDING FROM THE INVERT TO 1.0 M ABOVE GRADE PAINTED RED.
5. SEWER BEDDING AS PER CITY STANDARD S6 & S7. GRANULAR 'A' BEDDING TO BE INCREASED TO 300MM WHERE SEWERS ARE BELOW THE GROUNDWATER TABLE.
6. SANITARY SEWER MANHOLES SHALL BE BENCHED AS PER OPSD 701.021. SANITARY MANHOLE FRAME AND COVERS SHALL BE AS PER CITY OF OTTAWA STD. S24 AND S25. SAFETY PLATFORMS SHALL BE AS PER OPSD 404.02. DROP STRUCTURES SHALL BE IN ACCORDANCE WITH CITY OF OTTAWA SPECIFICATIONS AND OPSD 1003.01.
7. THE CONTRACTOR SHALL CONDUCT INFILTRATION/EXFILTRATION (AS PER CURRENT OPSS) TESTING ON ALL NEWLY INSTALLED SANITARY SEWERS. THE TEST SHALL BE PERFORMED IMMEDIATELY AFTER SEWER INSTALLATION AND VIEWED BY THE ENGINEER.
8. THE CONTRACTOR SHALL CONDUCT CCTV INSPECTION OF ALL NEWLY INSTALLED SANITARY SEWERS AND EXISTING SEWERS CONNECTED TO. THE TEST SHALL BE PERFORMED IMMEDIATELY AFTER SEWERS INSTALLED.
9. ALL SERVICE CONNECTIONS TO BE CONSTRUCTED AS PER CITY STANDARD S11 & S11.1.
10. THE CONTRACTOR SHALL CONSTRUCT FLEXIBLE SANITARY SEWERS IN ACCORDANCE WITH OPSD 802.010 AND 802.013. DURING CONSTRUCTION, THE CONTRACTOR SHALL PROTECT THE PIPES FROM HEAVY CONSTRUCTION EQUIPMENT. BEDDING AND BACKFILL SHALL BE COMPACTED TO A MINIMUM OF 95% SPMDD.
11. ALL SANITARY BUILDING DRAINS TO BE EQUIPPED WITH SANITARY BACKWATER VALVES INSTALLED PER CITY OF OTTAWA STANDARD DRAWING S14.1.
12. WITHIN THE FROST ZONE, THE BACKFILL IN THE SERVICE TRENCHES SHOULD MATCH THE SOIL ON SIDES TO MINIMIZE DIFFERENTIAL FROST HEAVING IN THE SUBGRADE.
13. MINIMUM SOIL COVER TO BE 2.1m TO PROTECT SEWERS FROM FROST DAMAGE. IN AREAS WHERE ADEQUATE FROST COVER CANNOT BE ACHIEVED, EQUIVALENT THERMAL INSULATION TO BE INSTALLED AS PER OPSD 514.010

STORM SEWER NOTES

1. ALL STORM SEWER MATERIALS AND INSTALLATION SHALL CONFORM TO THE LATEST REVISIONS OF THE STANDARDS AND SPECIFICATIONS OF THE CITY OF OTTAWA, ONTARIO PROVINCIAL STANDARD DRAWINGS (OPSD) AND SPECIFICATIONS (OPSS).
2. ALL REINFORCED CONCRETE STORM SEWER PIPE SHALL BE IN ACCORDANCE WITH CSA A257.2 (LATEST AMENDMENT). ALL NON-REINFORCED CONCRETE STORM SEWER PIPE SHALL BE IN ACCORDANCE WITH CSA A257.1. (LATEST AMENDMENT). PIPE SHALL BE JOINTED WITH STD. RUBBER GASKETS AS PER CSA A257.3 (LATEST AMENDMENT).
3. ALL PVC STORM SEWERS ARE TO BE SDR 35 APPROVED PER C.S.A. 8182.2 OR LATEST AMENDMENT, UNLESS OTHERWISE SPECIFIED.
4. THE CONTRACTOR SHALL CONSTRUCT FLEXIBLE STORM SEWERS IN ACCORDANCE WITH OPSD 802.010 AND 802.013. RIGID STORM PIPE SHALL BE CONSTRUCTED IN ACCORDANCE WITH OPSD 802.030. DURING CONSTRUCTION THE CONTRACTOR SHALL PROTECT THE PIPES FROM HEAVY CONSTRUCTION EQUIPMENT. BEDDING AND BACKFILL SHALL BE COMPACTED TO A MINIMUM OF 95% SPMDD.
5. SEWER BEDDING AS PER CITY STANDARD S6 & S7.
6. ALL STORM LATERALS SHALL BE PVC SDR 28, WHITE IN COLOR AND MARKED WITH A 50mm X 100mm WOODEN MARKER EXTENDING FROM THE INVERT TO 1.0M ABOVE GRADE PAINTED GREEN.
7. ALL SERVICE CONNECTIONS TO BE CONSTRUCTED AS PER CITY STANDARD S11 & S11.1.
8. WITHIN THE FROST ZONE, THE BACKFILL IN THE SERVICE TRENCHES SHOULD MATCH THE SOIL ON SIDES TO MINIMIZE DIFFERENTIAL FROST HEAVING IN THE SUBGRADE
9. MINIMUM SOIL COVER TO BE 2.1m TO PROTECT SEWERS FROM FROST DAMAGE. IN AREAS WHERE ADEQUATE FROST COVER CANNOT BE ACHIEVED, EQUIVALENT THERMAL INSULATION TO BE INSTALLED AS PER OPSD 514.010
10. ALL STORM SERVICES TO BE EQUIPPED WITH APPROVED BACKWATER VALVES.
11. STORM MANHOLE FRAME AND COVERS SHALL BE AS PER CITY OF OTTAWA STD. S24, S24.1 AND S25.
12. SAFETY PLATFORMS SHALL BE IN ACCORDANCE WITH OPSD 404.02.
13. DROP STRUCTURES SHALL BE IN ACCORDANCE WITH CITY OF OTTAWA SPECIFICATIONS AND OPSD 1003.01.
14. STORM SEWER MANHOLES SERVING LOCAL SEWERS LESS THAN 900mm SHALL BE CONSTRUCTED WITH A 300mm SUMP. FOR STORM SEWERS 900mm AND OVER USE BENCHING IN ACCORDANCE WITH OPSD 701 .021.
15. SINGLE AND DOUBLE CATCHBASINS SHALL BE IN ACCORDANCE WITH CITY OF OTTAWA STD. S1, AND OPSD 705.020, RESPECTIVELY. FRAMES AND GRATE SHALL BE AS PER CITY OF OTTAWA STD. S19 FOR REAR LOT CATCHBASINS, AND STREET CATCHBASINS.
16. CURB INLET TYPE CATCH BASIN (CICB) SHALL BE IN ACCORDANCE WITH CITY OF OTTAWA STD. S3. AND GRATE SHALL BE AS PER CITY OF OTTAWA STD. S22 AND S23, UNLESS OTHERWISE NOTED.
17. SINGLE AND DOUBLE CATCHBASIN LEADS SHALL BE 200mmØ AND 250mmØ (MIN) RESPECTIVELY, 1.0% SLOPE (MIN.) UNLESS OTHERWISE NOTED.
18. ALL CATCHBASINS AND CATCHBASIN MANHOLES SHALL HAVE SUMPS WITH 300m DEPTH, UNLESS OTHERWISE NOTED.
19. CONTRACTOR SHALL ENSURE THAT CATCHBASINS ARE INSTALLED AT THE LOW POINT OF SAG CURB WORKS.
20. THE STORM SEWER CLASSES HAVE BEEN DESIGNED BASED ON BEDDING CONDITIONS SPECIFIED. WHERE THE SPECIFIED TRENCH WIDTH IS EXCEEDED, THE CONTRACTOR SHALL BE REQUIRED TO PROVIDE ADDITIONAL BEDDING, A DIFFERENT TYPE OF BEDDING OR A HIGHER PIPE STRENGTH AT HIS OWN EXPENSE AND SHALL ALSO BE RESPONSIBLE FOR EXTRA TEMPORARY AND/OR PERMANENT REPAIRS MADE NECESSARY BY THE WIDENED TRENCH.
21. THE CONTRACTOR SHALL CONDUCT CCTV INSPECTION OF ALL NEWLY INSTALLED STORM SEWERS AND EXISTING SEWERS CONNECTED TO. THE TEST SHALL BE PERFORMED IMMEDIATELY AFTER SEWERS INSTALLED.

WATERMAIN NOTES

1. ALL WATERMAIN MATERIALS AND INSTALLATION SHALL CONFORM TO THE LATEST REVISIONS OF THE STANDARDS AND SPECIFICATIONS OF THE CITY OF OTTAWA, ONTARIO PROVINCIAL STANDARD DRAWINGS (OPSD) AND SPECIFICATIONS (OPSS).
2. NO WORK SHALL COMMENCE UNLESS A CITY WATER WORKS INSPECTOR IS ON SITE. WATERMAIN CONNECTIONS BY CITY OF OTTAWA FORCES WITH ALL EXCAVATION BACKFILL AND ROAD REINSTATEMENT BY CONTRACTOR.
3. ALL PVC WATERMAINS SHALL BE EQUAL TO AWWA C-900 CLASS 150, SDR 18, OR APPROVED EQUAL.
4. WATERMAINS TRENCH AND BEDDING SHALL BE IN ACCORDANCE WITH CITY OF OTTAWA STANDARD W17, UNLESS OTHERWISE SPECIFIED. BEDDING AND COVER MATERIAL SHALL BE SPECIFIED BY PROJECT GEOTECHNICAL ENGINEER.
5. ALL PVC WATERMAINS SHALL BE INSTALLED WITH A 10 GAUGE STRANDED COPPER TWU OR RWU TRACER WIRE IN ACCORDANCE WITH CITY OF OTTAWA STD. W36.
6. WATER SERVICES ARE TO BE TYPE K SOFT COPPER AS PER CITY OF OTTAWA STD. W26 UNLESS OTHERWISE SPECIFIED. ALL WATER SERVICES CROSSING SEWERS ARE TO BE INSTALLED AS PER CITY OF OTTAWA STD. W38. WATER SERVICES SHALL BE MARKED WITH A "50mm X 100mm". EXTENDING FROM THE INVERT TO 1.0m ABOVE GRADE PAINTED BLUE. STAND POSTS/SHUT-OFFS SHALL BE INSTALLED AT THE PROPERTY LINE.
7. CATHODIC PROTECTION IS REQUIRED ON ALL METALLIC FITTINGS AS PER CITY OF OTTAWA STD. W40 AND W42.
8. VALVE BOXES SHALL BE INSTALLED AS PER CITY OF OTTAWA DETAIL W24.
9. ALL FIRE HYDRANTS TO BE INSTALLED AS PER CITY STANDARD W19 AND LOCATED AS PER CITY STANDARD W18 AND/OR CITY STANDARD CROSS SECTIONS.
10. ALL WATERMAINS TO BE INSTALLED AT MINIMUM COVER OF 2.4m.
11. THRUST BLOCKS AND RESTRAINT AS PER CITY OF OTTAWA DWGS: W25.3 AND W25.4, W25.5 AND W25.6.
12. IF WATERMAIN MUST BE DEFLECTED TO MEET ALIGNMENT, ENSURE THAT THE AMOUNT OF DEFLECTION USED IS LESS THAN HALF THAT RECOMMENDED BY THE MANUFACTURER.
13. DISINFECTION AND TESTING OF WATERMAIN TO BE IN ACCORDANCE WITH CITY OF OTTAWA STANDARDS.
14. WATER METERS TO BE INSTALLED AS PER W30 FOR WATER SERVICES.
15. THE CONTRACTOR SHALL PROVIDE ALL TEMPORARY CAPS, PLUGS AND BLOW-OFFS AND NOZZLES REQUIRED FOR TESTING AND DISINFECTION OF THE WATERMAIN.
16. INSULATION FOR WATERMAIN CROSSING OVER AND BELOW SEWER SHALL BE IN ACCORDANCE WITH CITY OF OTTAWA STD. W25.2 AND W25, RESPECTIVELY, WHERE WATERMAIN COVER IS LESS THAN 2.4m.
17. WHERE THE SEPARATION BETWEEN SERVICES AND MANHOLES IS LESS THAN 1.2m, WATER SERVICES ARE TO BE INSULATED AS PER CITY OF OTTAWA STD. W23.
18. AS PER CITY GUIDELINE, THE MINIMUM VERTICAL CLEARANCE BETWEEN WATERMAIN AND SEWER / UTILITY IS 0.25M FOR CROSSING OVER THE SEWER, AS PER CITY STD W25.2. FOR CROSSING UNDER SEWER, THE MINIMUM VERTICAL CLEARANCE IS 0.50M AS PER CITY STD. W25. FOR CROSSING UNDER SEWER. ADEQUATE STRUCTURAL SUPPORT FOR THE SEWERS IS REQUIRED TO PREVENT EXCESSIVE DEFLECTION OF JOINTS AND SETTLING. THE LENGTH OF WATER PIPE SHALL BE CENTERED AT THE POINT OF CROSSING SO THAT THE JOINTS WILL BE EQUIDISTANT AND AS FAR AS POSSIBLE FROM THE SEWER.

ROADWAY SPECIFICATIONS

1. ALL TOPSOIL AND ORGANIC MATERIAL SHALL BE STRIPPED WITHIN THE ROAD ALLOWANCE PRIOR TO THE COMMENCEMENT OF CONSTRUCTION.
2. CONCRETE CURB SHALL BE IN ACCORDANCE WITH CITY OF OTTAWA STD. SC1.1.(BARRIER CURB) AND SC1.3 (MOUNTABLE CURB), AS NOTED. PROVISION SHALL BE MADE FOR CURB DEPRESSIONS AT SIDEWALKS AND DRIVEWAYS.
3. ROAD SUBDRAINS SHALL BE IN ACCORDANCE WITH CITY OF OTTAWA STD. R1. SUBDRAINS SHALL BE 6m IN LENGTH AT CATCHBASINS. SUBDRAINS SHALL BE INSTALLED BOTH SIDES AT LOWPOINTS AND ON THE HIGH SIDE AT FLOWBY CATCHBASINS.
4. PAVEMENT REINSTATEMENT FOR SERVICE AND UTILITY CUTS SHALL BE IN ACCORDANCE WITH CITY OF OTTAWA STD. R10 AND OPSD 509.010, OPSS 310.
5. GRANULAR "A" SHALL BE PLACED TO A MINIMUM THICKNESS OF 300mm AROUND ALL STRUCTURES WITHIN PAVEMENT AREA.
6. ALL GRANULAR FOR ROADS SHALL BE COMPACTED TO A MINIMUM OF 98% STANDARD PROCTOR DENSITY.
7. ASPHALT WEAR COURSE SHALL NOT BE PLACED UNTIL THE VIDEO INSPECTION OF SEWERS & NECESSARY REPAIRS HAVE BEEN CARRIED OUT TO THE SATISFACTION OF THE ENGINEER.
8. SUB- EXCAVATE SOFT AREAS AND FILL WITH GRANULAR 'B' COMPACTED IN MAXIMUM 300mm LIFTS.
9. PAVEMENT STRUCTURE: REFER TO LEGEND.

GENERAL NOTES FOR GRADING

1. IT SHALL BE THE BUILDER'S RESPONSIBILITY TO ENSURE THAT GRADING AROUND HYDRANTS, TRANSFORMERS, AND UTILITY PEDESTALS, ETC., MEET CURRENT CITY OF OTTAWA, HYDRO AND UTILITY COMPANY REQUIREMENTS.
2. ALL GROUND SURFACES SHALL BE EVENLY GRADED WITHOUT PONDING AREAS AND WITHOUT LOW POINTS EXCEPT WHERE APPROVED SWALE OR CATCH BASIN OUTLETS ARE PROVIDED.
3. CONTRACTOR TO ADJUST EXISTING CATCH BASINS, MANHOLES, FIRE HYDRANTS, VALVE CHAMBERS AND VALVE BOXES TO FINAL GRADE AS REQUIRED.
4. CONTRACTOR SHALL TAKE ALL NECESSARY PRECAUTIONS TO PROTECT EXISTING FOUNDATIONS OF ADJACENT BUILDINGS DURING EXCAVATION AND CONSTRUCTION PERIOD.
5. GRADING IN GRASSED AREAS WILL BE BETWEEN 2% TO 7%. GRADES IN EXCESS OF 7% WILL REQUIRE A MAXIMUM 3:1 TERRACING.

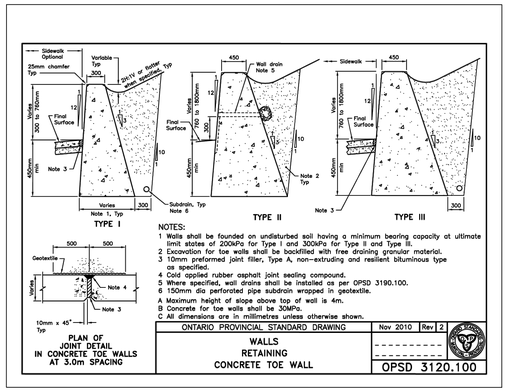

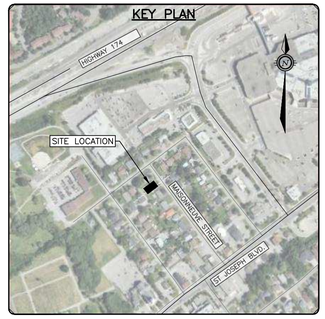

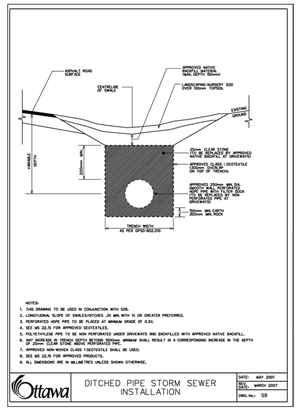

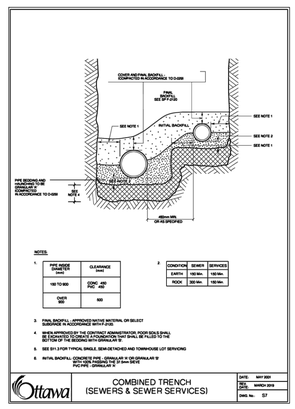

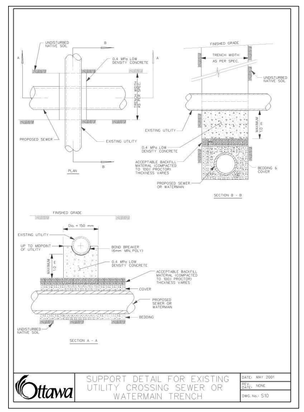

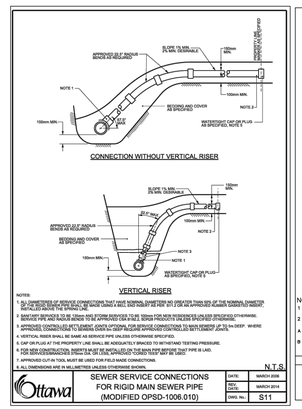

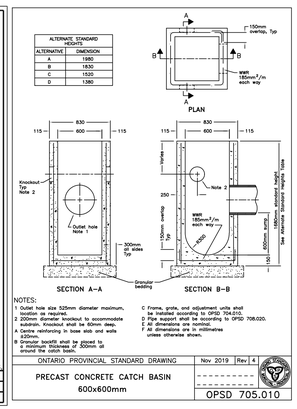

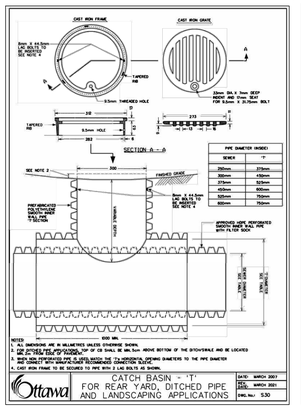

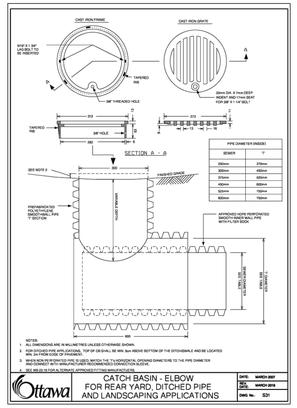

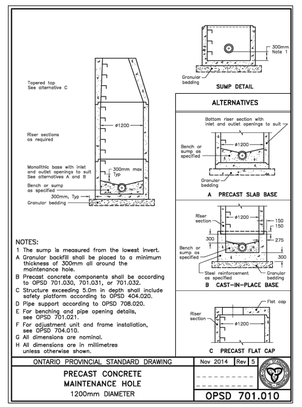

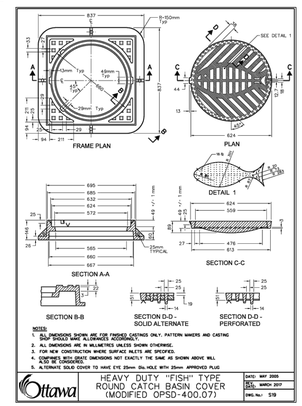

CAUTION
THE POSITION OF ALL POLE LINES, CONDUITS, WATERMAINS, SEWERS AND OTHER UNDERGROUND AND OVERGROUND UTILITIES AND STRUCTURES IS NOT NECESSARILY SHOWN ON THE CONTRACT DRAWINGS, AND WHERE SHOWN, THE ACCURACY OF THE POSITION OF SUCH UTILITIES AND STRUCTURES IS NOT GUARANTEED. BEFORE STARTING WORK, DETERMINE THE EXACT LOCATION OF ALL SUCH UTILITIES AND STRUCTURES AND ASSUME ALL LIABILITY FOR DAMAGE TO THEM.

REV	REVISION DESCRIPTION	DATE	BY	APPD
2	RE-ISSUED FOR SPA	04/10/24	AGJ	AJ
1	SPA	06/08/24	AGJ	AJ

SCALE
NORTH
DESIGNED BY
REVIEWED BY
LICENSED PROFESSIONAL ENGINEER A. K. JARIWALA 100562090 2024/10/15 PROVINCE OF ONTARIO

CLIENT
PulseSocieties Ltd.
135 LAURIER AVE W, SUITE 100
OTTAWA, ON. K1P 5J2
613.612.3288

exp Services Inc.
t +1 613.688.1899 | f +1 613.225.7330
2650 Queensview Drive, Unit 100
Ottawa, ON K2B 8H6
Canada
www.exp.com
• BUILDINGS • EARTH & ENVIRONMENT • ENERGY •
• INDUSTRIAL • INFRASTRUCTURE • SUSTAINABILITY •

BASEPLAN AGJ
DESIGN AGJ
CHECKED AJ
CAD AGJ
PROJECT MANAGER AJ
APPROVED AA

PROJECT
1108 MAISONNEUVE
OTTAWA, ONTARIO. K1C 1L1

TITLE
NOTES & DETAILS

PROJECT No. OTT-24006872-A0
SURVEY AOV
DATE 31/07/24
DRAWING No. C001

DOT-12-24-0079

Filename: \\exp\data\ott\ott-24006872-a0\0 exp\dwg\ott-24006872-a0 - mississauga - civil 2.dwg
Last Saved:10/4/2024 4:01:23 PM Last Plotted:10/15/2024 11:12:47 AM
Plotted by: Alan Jariwala Plot Scale: 1:1 Plot Date: Sep 30, 2024
References: Keyplan: MTM-NAD83.dwg; ref MTM-NAD83.dwg; ref Site Plan.dwg
REV