PATERSON GROUP
Consulting Engineers
9 Auriga Drive
Ottawa, Ontario
K2E 7T9
Tel: (613) 226-7381

Geotechnical Engineering
Environmental Engineering
Hydrogeology
Materials Testing
Building Science
Rural Development Design
Retaining Wall Design
Noise and Vibration Studies

patersongroup.ca

August 18, 2025
PG5036-LET.02

Caivan Communities
3713 Borrisokane Road
Ottawa, Ontario
K2J 4J4

Attention: **Hugo Lalonde**

Subject: **Compilation of Relevant Geotechnical and Hydrogeological Documents**
Conservancy East Residential Development
Borrisokane Road, Ottawa, Ontario

Dear Sir,

Paterson Group has prepared the current letter to compile the relevant geotechnical and hydrogeological documents in support of the proposed residential development located at the subject site, including geotechnical investigation reports, letters, and memorandums.

The documents included in the current letter are listed below and are directly relevant to comments received from the City of Ottawa Staff. This document serves to provide a consolidated and completed record of information provided by Paterson as part of the Conservancy East Review.

Paterson Group Report PG5036-1 Revision 7 dated March 14, 2024: This report contains the findings of the geotechnical field investigation and provides geotechnical recommendations pertaining to the design and construction of the subject development. Within Section 4.3 of the report, Paterson has stated that the long-term groundwater table is located at an approximate depth of 2 to 3 m below the original ground surface. Additionally, the concept of groundwater lowering is discussed in Section 5.3 of the report. In this context, groundwater lowering is considered to conservatively calculate permissible grade raise restrictions. The greater the effect of groundwater lowering considered in this exercise, the more conservative the permissible grade restrictions become.

PG5036-LET.01 Revision 3 – Sump Pump Feasibility Report dated December 5, 2022: This report was prepared in accordance with City of Ottawa Guidelines to determine if the subject site is suitable for the use of sump pumps and provides a discussion on the criteria to design the underside of footing elevations with respect to the groundwater table. Paterson provides further discussion on the expected long term groundwater table (1.8 to 3.2 m) based on the properties of the clay soils encountered throughout the proposed development. This long term groundwater table was then plotted as a contour map. Reference should be made to PG5036-10 – Approximate Long-Term Groundwater Table Plan. In Section 3.0 of the report, Paterson concludes the groundwater level readings have been influenced by perched water conditions and that the groundwater level will be encountered at a depth below ground surface. Under section 5.0 of the report, Paterson concludes that the subject site is suitable for the use of sump pump based on it meeting the criteria outlined in the relevant Technical Bulletins.

PG5036-MEMO.12 – Response to City Comments - Hydrogeological review of Groundwater Conditions dated June 8, 2021: This memorandum summarizes Paterson's review of the Rideau Valley Conservation Authority (RVCA) Technical Review Memorandum (File: D07-16-20-0021) and provides responses to comments from the RVCA pertaining to groundwater conditions at the subject site. In this memo, Paterson reiterates and expands upon the expected long-term groundwater table across the site.

PG5036-MEMO.17 Revision 1 – Preliminary LID Review dated April 25, 2022: This memorandum provides a preliminary review of the proposed Low Impact Development (LID) design to be undertaken at the subject site. Paterson reiterates a long term groundwater table expected at approximately 2 to 3 m below ground surface. Further, Paterson completed a review of the feasibility of the proposed LID system at the subject site. The design of the LID system was carried forward by DSEL with support from Paterson.

PG5036-MEMO.44 Revision 2 – Infiltration Testing dated March 6, 2025: This memorandum provides a geotechnical and hydrogeological review of the long-term water groundwater levels, groundwater conditions, and LID design recommendations for the subject site. This memo acknowledges and was prepared in response to the peer review by Aquafor Beech. The memo supports our previous responses to assertions that groundwater is at or near ground surface. Paterson maintains that based on their site inspection work dating back to 2019, Paterson alone is uniquely qualified in speaking to the groundwater conditions at the site. Further, a summary of the infiltration testing carried out to date is described in the memo.

PG5036-MEMO.45 – Floor Slab Uplift Review dated August 6, 2025: This memorandum provides a geotechnical review of the potential for basement floor slab uplift resulting from a 100 year storm event within Phases 3 and 4 of the proposed development at the subject site. The memo serves to address concerns the City has with respect to flooding of homes during a 100 year storm event.

TABLE OF CONTENTS

NOTE: The page numbers provided herein refer to the page numbers of the compiled PDF document, not to the page numbers of the individual documents.

PATERSON GROUP

Geotechnical Investigation

Proposed Residential Development

Conservancy Lands East
Ottawa, Ontario

Prepared for Caivan Communities

Report PG5036-1 Revision 7, dated March 14, 2024

TABLE OF CONTENTS

APPENDICES

1.0 Introduction

Paterson Group (Paterson) was commissioned by Caivan Communities to complete a geotechnical report based on existing soils information for the proposed Conservancy Lands East residential development to be located along Borrisokane Road in the City of Ottawa (refer to Figure 1 - Key Plan presented in Appendix 2). The objective of the geotechnical investigation was to:

- ❒ Review available subsurface soil and groundwater information prepared by others.
- ❒ Provide geotechnical recommendations for the design of the proposed development including construction considerations which may affect its design.

The following report has been prepared specifically and solely for the aforementioned project which is described herein. The report contains the geotechnical findings and includes recommendations pertaining to the design and construction of the subject development as understood at the time of writing this report.

2.0 Proposed Development

Although, detailed development plans were not available during preparation of this report, it is understood that the proposed residential development will consist of single- family dwellings and townhouses with associated driveways, local roadways, landscaping areas, and park lands.

It is further anticipated that the proposed development will be serviced by future municipal water, sanitary and storm services.

3.0 Method of Investigation

3.1 Field Investigation

A geotechnical investigation was previously completed by others at the subject site during the periods of January 31 through March 31, 2017, and October 25 through November 2, 2018. The geotechnical investigation consisted of 45 boreholes advanced to a maximum depth of 9.3 m below the existing ground surface. The boreholes were advanced using a track-mounted auger drill rig operated by a two-person crew. The drilling procedure consisted of augering to the required depths and sampling the overburden soils.

A supplemental geotechnical investigation was carried out by Paterson from September 30 to November 30, 2022, and consisted of advancing a total of eight (8) test pits to a maximum depth of 2.1 m below the existing ground surface. The test pits were excavated using a hydraulic excavator and backfilled using the site excavated soil upon completion. All field work was conducted under the full-time supervision of Paterson personnel under the direction of a supervising engineer.

The locations of the boreholes and test pits are shown on Drawing PG5036-1 - Test Hole Location Plan included in Appendix 2.

Reference should be made to the Record of Borehole sheets prepared by others and the Soil Profile and Test Data Sheets prepared by Paterson which are presented in Appendix 1 for specific details of the soil profile encountered at the test hole locations.

Groundwater

Groundwater monitoring wells and standpipes were installed in thirty-four (34) boreholes by others to permit monitoring of the groundwater levels subsequent to the completion of the sampling program. Groundwater infiltration into the test pits was also recorded, where encountered. All groundwater observations by others are noted on the Record of Borehole sheets presented in Appendix 1.

3.2 Field Survey

The ground surface elevations at the borehole and test pit locations are understood to be referenced to a geodetic datum. The locations of the boreholes and the ground surface elevation for each borehole location are presented on Drawing PG5036-1 - Test Hole Location Plan in Appendix 2.

3.3 Laboratory Testing

The soil samples recovered from the subject site were examined in our laboratory to review the results of the field logging.

A total of seven (7) Shelby tube samples collected from the boreholes during the geotechnical investigation by others were submitted for unidimensional consolidation testing. The results of the consolidation testing are summarized in Section 5.3.

A total of forty-five (45) representative soil samples were submitted for Atterberg limit testing from the geotechnical investigation conducted by others. The results of the Atterberg limit testing are presented in Section 4.2.

3.4 Analytical Testing

Three soil samples were submitted to assess the corrosion potential for exposed ferrous metals and the potential of sulphate attacks against subsurface concrete structures. The sample was analyzed to determine the concentration of sulphate and chloride, the resistivity, and the pH of the sample. The results are discussed in Section 6.8 and shown in Appendix 1.

4.0 Observations

4.1 Surface Conditions

The subject site generally consists of agricultural fields and is bordered by the Borrisokane Road to the west, agricultural lands to the north and east, and the Jock River to the south. The existing ground surface across the site is relatively level with approximate ground surface elevation varying between 91 to 92m.

4.2 Subsurface Profile

Overburden

The subsurface profile encountered at the borehole locations generally consisted of an approximate 50 to 460 mm thick layer of topsoil underlain by a silty clay deposit.

The silty clay deposit was generally observed to have a very stiff to firm, brown silty clay crust, becoming a soft to firm, grey silty clay at approximate depths of 2.5 to 3 m below the existing ground surface. The silty clay deposit generally extended to the bottom of the boreholes at depths of up to 9 m.

However, near the southeastern corner of the site, a glacial till deposit was encountered underlying the silty clay at depths varying from 3.7 to 6.3 m below the existing ground surface. The glacial till was generally observed to consist of a loose to compact, grey silty sand with some gravel and occasional cobbles and boulders.

Laboratory Testing

Atterberg limit testing, as well as associated moisture content testing, was completed by others on the recovered silty clay samples at selected locations throughout the subject site.

The results of the Atterberg limit tests are presented in Table 1 on the next page.

Table 1 - Atterberg Limits Results

Sample	Depth (m)	LL (%)	PL (%)	PI (%)	w (%)
BH 17-11	0.8	39	15	24	34
BH 17-12	0.8	41	18	23	29
BH 17-13	0.8	43	19	24	28
BH 17-14	1.5	43	16	27	31
BH 17-39	0.8	26	19	7	32
BH 17-40	0.8	43	20	23	30
BH 17-41	0.8	29	19	10	28
BH 17-42	0.8	38	15	23	34
BH 17-43	0.8	39	16	23	33
BH 17-44	0.8	29	20	9	33
BH 17-45	0.8	29	18	11	30
BH 17-46	0.8	32	19	13	34
BH 17-47	0.8	47	20	27	38
BH 17-48	0.8	37	15	22	27
BH 17-49	0.8	49	19	30	32
BH 17-50	0.8	51	16	35	33
BH 17-51	0.8	53	22	31	32
BH 17-52	0.8	55	22	33	33
BH 17-53	0.8	50	20	30	34
BH 17-55	0.8	56	16	40	35
BH 17-58	0.8	48	15	33	31
BH 17-60	0.8	40	14	26	31
BH 18-15	1.5	44	18	26	35
BH 18-16	0.8	22	Non-Plastic		
BH 18-17	0.8	42	21	21	36
BH 18-18	1.5	40	18	22	33
BH 18-19	1.5	46	18	28	45
BH 18-20	1.5	48	19	29	43
BH 18-21	0.8	40	17	23	30

Table 1 - Atterberg Limits Results (continued)

Sample	Depth (m)	LL (%)	PL (%)	PI (%)	w (%)
BH 18-22	1.5	36	17	19	31
BH 18-23	0.8	40	17	23	34
BH 18-24	1.5	63	29	37	50
BH 18-25	0.8	24	18	6	28
BH 18-26	1.5	47	22	25	40
BH 18-27	0.8	26	16	10	27
BH 18-28	1.5	45	19	27	43
BH 18-29	0.8	44	22	22	35
BH 18-30	1.5	41	19	22	35
BH 18-31	0.8	47	18	29	33
BH 18-32	1.5	34	19	15	36
BH 18-33	0.8	40	17	23	33
BH 18-34	1.5	63	25	38	50
BH 18-35	0.8	41	20	21	32
BH 18-36	1.5	42	18	24	38
BH 18-37	0.8	47	19	28	30

Notes: LL: Liquid Limit; PL: Plastic Limit; PI: Plasticity Index; w: water content

Bedrock

Based on available geological mapping, bedrock in the area consists of interbedded limestone and dolomite of the Gull River formations with overburden drift thicknesses ranging between 5 and 15 m.

4.3 Groundwater

Groundwater levels (GWL) were measured in thirty-four (34) boreholes following completion of the geotechnical investigation. The measured GWL readings are presented in Table 2 below. Groundwater levels can also be estimated based on the observed colour, moisture levels and consistency of the recovered soil samples. Based on these observations, the long-term groundwater level is expected between 2 to 3 m depth.

However, it should be noted that the groundwater levels can fluctuate periodically throughout the year and higher levels could be encountered at the time of construction.

Table 2 - Summary of Groundwater Level Readings

Test Pit ID	Ground Elevation (m)	Measured Groundwater Level (m)		Recording Date
		Depth	Elevation	
TP 1-22	91.55	1.05	90.55	September 30, 2022
TP 2-22	91.41	Dry	-	September 30, 2022
TP 3-22	91.40	0.90	90.50	September 30, 2022
TP 4-22	91.55	1.05	90.55	September 30, 2022
TP 5-22	91.58	1.10	91.48	September 30, 2022
TP 6-22	91.55	1.00	90.55	September 30, 2022
TP 7-22	91.55	1.00	90.55	September 30, 2022
TP 8-22	91.68	Dry	-	September 30, 2022
TP 9-22	91.67	Dry	-	November 30, 2022
TP 10-22	91.50	Dry	-	November 30, 2022
TP 11-22	91.68	Dry	-	November 30, 2022
TP 12-22	91.69	Dry	-	November 30, 2022
TP 13-22	91.86	1.40	90.46	November 30, 2022
TP 14-22	91.18	1.40	89.78	November 30, 2022
TP 15-22	91.27	1.30	89.97	November 30, 2022

Table 2 - Summary of Groundwater Level Readings (Continued)

Borehole Number	Ground Elevation (m)	Measured Groundwater Level (m)		Recording Date
		Depth	Elevation	
17-11	91.19	0.73	90.46	February 21, 2017
17-42	91.16	0.22	90.94	April 13, 2017
17-43A	91.52	-0.08	91.60	March 31, 2017
17-46A	91.63	0.27	91.36	March 31, 2017
17-52A	91.43	-0.03	91.46	March 31, 2017
18-15A	91.23	-0.15	91.38	April 30, 2019
18-15B	91.23	-0.06	91.29	April 30, 2019
18-16	91.48	0.13	91.35	April 30, 2019
18-17	91.47	-0.02	91.49	April 30, 2019
18-18A	91.54	0.37	91.17	April 30, 2019
18-18B	91.54	0.43	91.11	April 30, 2019
18-19	91.26	0.41	90.85	April 30, 2019
18-20	91.29	0.23	91.06	April 30, 2019
18-21	91.36	0.17	91.19	April 30, 2019
18-22A	91.31	-0.18	91.49	April 30, 2019
18-22B	91.31	0.16	91.15	April 30, 2019
18-23	91.32	0.15	91.17	April 30, 2019
18-24	91.23	0.12	91.11	April 30, 2019
18-25	91.24	0.08	91.16	April 30, 2019
18-26A	91.45	0.45	91.00	April 30, 2019
18-26B	91.45	0.38	91.07	April 30, 2019
18-27	91.38	0.01	91.37	April 30, 2019
18-28	91.17	0.23	90.94	April 30, 2019
18-29	91.04	0.19	90.85	April 30, 2019
18-30A	90.95	-0.30	91.25	April 30, 2019
18-30B	90.95	0.01	90.94	April 30, 2019
18-31	91.06	0.13	90.94	April 30, 2019
18-32	90.83	0.09	90.74	April 30, 2019
18-33	91.13	0.32	90.81	April 30, 2019
18-34A	91.30	0.50	90.80	April 30, 2019

Table 2 - Summary of Groundwater Level Readings (Continued)

Borehole Number	Ground Elevation (m)	Measured Groundwater Level (m)		Recording Date
		Depth	Elevation	
18-34B	91.30	0.70	90.60	April 30, 2019
18-35	91.56	0.68	90.88	April 30, 2019
18-36	91.19	0.00	91.19	April 30, 2019
18-37	91.29	0.46	90.83	April 30, 2019

Notes: Test pit elevations are understood to be referenced to a geodetic datum.
Groundwater infiltration was observed on the base and sidewall of test pits if present.

5.0 Discussion

5.1 Geotechnical Assessment

From a geotechnical perspective, the subject site is suitable for the proposed residential development. It is expected that the proposed residential buildings will be founded on conventional shallow footings placed on an undisturbed, stiff to soft silty clay bearing surface or engineered fill over an approved subgrade surface.

Consideration should be given to the side slopes of long-term structures, such as stormwater management facilities. Safe side slopes of 3H:1V should be maintained for all long-term structures.

Due to the presence of a silty clay deposit, permissible grade raise restrictions are recommended for this site.

The Geotechnical Limit of Hazard Lands has been defined based on our slope stability analysis and review of the adjacent slope along the Jock River, as presented on Drawing PG5036-1 - Test Hole Location Plan. This is discussed further in Section 6.8.

The above and other considerations are discussed in the following paragraphs.

5.2 Site Grading and Preparation

Stripping Depth

Topsoil and deleterious fill, such as those containing organic materials, should be stripped from under any buildings, paved areas, pipe bedding and other settlement sensitive structures.

Fill Placement

Fill used for grading beneath the building areas should consist, unless otherwise specified, of clean imported granular fill, such as Ontario Provincial Standard Specifications (OPSS) Granular A or Granular B Type II. Granular material should be tested and approved prior to delivery to the site. The fill should be placed in loose lifts of 300 mm thick or less and compacted using suitable compaction equipment for the lift thickness. Fill placed beneath the building areas should be compacted to at least 98% of the Standard Proctor Maximum Dry Density (SPMDD).

Non-specified existing fill along with site-excavated soil can be used as general landscaping fill and beneath parking areas where settlement of the ground surface is of minor concern. In landscaped areas, these materials should be spread in thin lifts and at least compacted by the tracks of the spreading equipment to minimize voids. If these materials are to be used to build up the subgrade level for areas to be paved, they should be compacted in thin lifts to a minimum density of 95% of the SPMDD. Non-specified existing fill and site-excavated soils are not suitable for use as backfill against foundation walls unless a composite drainage blanket connected to a perimeter drainage system is provided.

5.3 Foundation Design

Bearing Resistance Values

Strip footings, up to 2 m wide, and pad footings, up to 5 m wide, placed on an undisturbed, stiff silty clay bearing surface can be designed using a bearing resistance value at serviceability limit states (SLS) of **100 kPa** and a factored bearing resistance value at ultimate limit states (ULS) of **180 kPa**. Strip footings, up to 2 m wide, and pad footings, up to 5 m wide, placed on an undisturbed, firm silty clay bearing surface can be designed using a bearing resistance value at SLS of **60 kPa** and a factored bearing resistance value at ULS of **100 kPa**. A geotechnical resistance factor of 0.5 was applied to the above noted bearing resistance values at ULS.

Footings placed over an engineered pad, consisting of a Granular A or Granular B Type II or approved granular fill alternative placed in maximum 300 mm loose lifts and compacted to 98% of its SPMDD, can be designed using a bearing resistance value at SLS of 100 kPa and a factored bearing resistance value at ULS of 200 kPa.

Bearing resistance values for footing design should be determined on a per lot basis at the time of construction. The bearing resistance values are provided on the assumption that the footings will be placed on undisturbed soil bearing surfaces. An undisturbed soil bearing surface consists of one from which all topsoil and deleterious materials, such as loose, frozen or disturbed soil, whether in situ or not, have been removed, in the dry, prior to the placement of concrete for footings.

Lateral Support

The bearing medium under footing-supported structures is required to be provided with adequate lateral support with respect to excavations and different foundation levels. Adequate lateral support is provided to the in-situ bearing medium soils above the groundwater table when a plane extending down and out from the bottom edge of the footing at a minimum of 1.5H:1V passes only through in situ soil of the same or higher capacity as the bearing medium soil.

Permissible Grade Raise Recommendations

Consideration must be given to potential settlements which could occur due to the presence of the silty clay deposit and the combined loads from the proposed footings, any groundwater lowering effects, and grade raise fill. The foundation loads to be considered for the settlement case are the continuously applied loads which consist of the unfactored dead loads and the portion of the unfactored live load that is considered to be continuously applied. For dwellings, a minimum value of 50% of the live load is recommended by Paterson.

Generally, the potential long-term settlement is evaluated based on the compressibility characteristics of the silty clay. These characteristics are estimated in the laboratory by conducting unidimensional consolidation tests on undisturbed soil samples collected using Shelby tubes in conjunction with a piston sampler. A total of 7 site specific consolidation tests were conducted by others as part of the geotechnical investigation. The results of the consolidation tests are presented in Table 3 below.

Table 3 - Summary of Consolidation Test Results

Borehole No.	Sample	Depth (m)	p'_c (kPa)	p'_o (kPa)	C_{cr}	C_c
17-48	5	4.90	95.0	45.0	0.006	1.240
18-15	8	8.10	110.0	62.0	0.009	1.330
18-17	6	5.10	95.0	46.0	0.006	0.870
18-19	4	3.50	125.0	108.0	0.008	0.740
18-26	7	6.00	140.0	49.0	0.008	1.210
18-32	6	6.50	155.0	51.0	0.006	1.180
18-36	5	4.90	110.0	39.0	0.006	2.280

The value for p'_c is the preconsolidation pressure and p'_o is the effective overburden pressure of the test sample. The difference between these values is the available preconsolidation. The increase in stress on the soil due to the cumulative effects of the fill surcharge, the footing pressures, the slab loadings and the lowering of the groundwater should not exceed the available preconsolidation if unacceptable settlements are to be avoided.

The values for C_{cr} and C_c are the recompression and compression indices, respectively. These soil parameters are a measure of the compressibility due to stress increases below and above the preconsolidation pressures. The higher values for the C_c, as compared to the C_{cr}, illustrate the increased settlement potential above, as compared to below, the preconsolidation pressure.

The values of p'_c, p'_o, C_{cr} and C_c are determined using standard engineering testing procedures and are estimates only. Natural variations within the soil deposit will affect the results. The p'_o parameter is directly influenced by the groundwater level. Groundwater levels were measured during the site investigation. Groundwater levels vary seasonally which has an impact on the available preconsolidation. Lowering the groundwater level increases the p'_o and therefore reduces the available preconsolidation. Unacceptable settlements could be induced by a significant lowering of the groundwater level. The p'_o values for the consolidation tests carried out for the present investigation are based on the long-term groundwater level observed at each borehole location. The groundwater level is based on the colour and undrained shear strength profile of the silty clay.

The total and differential settlements will be dependent on characteristics of the proposed buildings. For design purposes, the total and differential settlements are estimated to be 25 and 20 mm, respectively. A post-development groundwater lowering of 1 m was assumed.

The potential post construction total and differential settlements are dependent on the position of the long-term groundwater level when buildings are situated over deposits of compressible silty clay. Efforts can be made to reduce the impacts of the proposed development on the long-term groundwater level by placing clay dykes in the service trenches, reducing the sizes of paved areas, leaving green spaces to allow for groundwater recharge or limiting planting of trees to areas away from the buildings. However, it is not economically possible to control the groundwater level.

To reduce potential long term liabilities, consideration should be given to accounting for a larger groundwater lowering and to provide means to reduce long term groundwater lowering (e.g. clay dykes, restriction on planting around the dwellings, etc). Buildings on silty clay deposits increases the likelihood of movements and therefore of cracking. The use of steel reinforcement in foundations placed at key structural locations will tend to reduce foundation cracking compared to unreinforced foundations.

Based on the consolidation testing results, test fill settlement monitoring results and undrained shear strength values at the borehole locations and our experience with local Ottawa clays, we have determined our permissible grade raise recommendations for the current phase of the proposed development. Our permissible grade raise recommendations are presented in Drawing PG5036-2 - Permissible Grade Raise Plan in Appendix 2.

Based on the above discussion, several options could be considered to accommodate proposed grade raises with respect to our permissible grade raise recommendations, such as the use of lightweight fill, which allow for raising the grade without adding a significant load to the underlying soils. Alternatively, it is possible to preload or surcharge the subject site in localized areas provided sufficient time is available to achieve the desired settlements.

5.4 Test Fill Pile Settlement Monitoring Program

Between January 30, 2020 and February 11, 2020, a test fill pile settlement monitoring program consisting of two (2) test fill piles (Piles E and EE) was initiated. The test fill piles were strategically placed across the subject site to provide additional information regarding our permissible grade raise recommendations for the area. The test fill piles consisted of a 30 m x 30 m pile, ranging in height from 2.5 to 3.1 m at the time of construction. Two (2) settlement plates were installed in each of the two (2) test fill piles. An initial baseline survey was conducted on each settlement plate at the time of installation to accurately monitor settlement contributed by the test fill piles.

The results of the monitoring program indicate that up to 79 mm of settlement at Test Fill Pile E and EE have occurred since the initial baseline survey. The monitoring results to date are considered to have confirmed that our original permissible grade raise recommendations for the site.

The test fill piles are outlined in Drawing PG5036-1 - Test Hole Location Plan in Appendix 2. The periodic readings, including most recent results, from our test fill pile settlement monitoring program are presented in Figure 12 - Test Fill Pile Settlement Monitoring Program in Appendix 2.

5.5 Design for Earthquakes

The results of seismic shear wave velocity testing performed by others indicated an average shear wave velocity, Vs_{30}, at this site of 198 m/s, 176 m/s, and 268 m/s. A **Site Class D** is therefore applicable for design across the majority of the site. The soils underlying the subject site are not susceptible to liquefaction.

Reference should be made to the latest revision of the Ontario Building Code (OBC) 2012 for a full discussion of the earthquake design requirements.

5.6 Basement Slab / Slab-on-Grade Construction

With the removal of all topsoil and deleterious fill from within the footprint of the proposed buildings, the native soil surface will be considered an acceptable subgrade on which to commence backfilling for floor slab construction.

Any soft areas should be removed and backfilled with appropriate backfill material prior to placing any fill. OPSS Granular B Type II, with a maximum particle size of 50 mm, are recommended for backfilling below the floor slab.

For structures with slab-on-grade construction, the upper 200 mm of sub-slab fill is recommended to consist of OPSS Granular A crushed stone. All backfill material within the footprint of the proposed buildings should be placed in maximum 300 mm thick loose layers and compacted to a minimum of 98% of the SPMDD.

For structures with basement slabs, it is recommended that the upper 200 mm of sub- floor fill consists of 19 mm clear crushed stone.

5.7 Pavement Structure

For design purposes, the pavement structure presented in the following tables is recommended for the design of car only parking areas, local roadways and arterial roadways with bus traffic.

Table 4 - Recommended Pavement Structure - Driveways / Car Only Parking Areas	
Thickness (mm)	**Material Description**
50	**Wear Course** - HL 3 Fine Asphaltic Concrete
150	**BASE** - OPSS Granular A Crushed Stone
300	**SUBBASE** - OPSS Granular B Type II
SUBGRADE - Either fill, in situ soil or OPSS Granular B Type I or II material placed over in situ soil or fill	

Table 5 - Recommended Pavement Structure - Local Roads		
Thickness (mm)	**Material Description**	**Traffic Category**
40	**Wear Course -** Superpave 12.5 Asphaltic Concrete	**B**
50	**Binder Course -** Superpave 19.0 Asphaltic Concrete	
150	**BASE** - OPSS Granular A Crushed Stone	
400	**SUBBASE** - OPSS Granular B Type II	
SUBGRADE - Either fill, in situ soil or OPSS Granular B Type I or II material placed over in situ soil or fill		

Table 6 - Recommended Pavement Structure - Roadways with Bus Traffic		
Thickness (mm)	**Material Description**	**Traffic Category**
40	**Wear Course -** Superpave 12.5 Asphaltic Concrete	**D**
50	**Upper Binder Course** - Superpave 19.0 Asphaltic Concrete	
50	**Lower Binder Course** - Superpave 19.0 Asphaltic Concrete	
150	**BASE** - OPSS Granular A Crushed Stone	
600	**SUBBASE** - OPSS Granular B Type II	
SUBGRADE - Either fill, in situ soil or OPSS Granular B Type I or II material placed over in situ soil or fill		

If soft spots develop in the subgrade during compaction or due to construction traffic, the affected areas should be excavated and replaced with OPSS Granular B Type II material. Weak subgrade conditions may be experienced over service trench fill materials. This may require the use of a geotextile, thicker subbase or other measures that can be recommended at the time of construction as part of the field observation program.

Minimum Performance Graded (PG) 58-34 asphalt cement should be used for driveways and local roadways and PG 64-34 asphalt cement should be used for roadways with bus traffic. The pavement granular base and subbase should be placed in maximum 300 mm thick lifts and compacted to a minimum of 100% of the material's SPMDD using suitable vibratory equipment.

Pavement Structure Drainage

Satisfactory performance of the pavement structure is largely dependent on maintaining the contact zone between the subgrade material and the base stone in a dry condition. Failure to provide adequate drainage under conditions of heavy wheel loading can result in the fine subgrade soil being pumped into the voids in the stone subbase, thereby reducing load carrying capacity.

Due to the low permeability of the subgrade materials consideration should be given to installing subdrains during the pavement construction as per City of Ottawa standards. The subdrain inverts should be approximately 300 mm below subgrade level. The subgrade surface should be crowned to promote water flow to the drainage lines.

6.0 Design and Construction Precautions

6.1 Foundation Drainage and Backfill

A perimeter foundation drainage system is recommended for each proposed structure. The system should consist of a 100 to 150 mm diameter, geotextile-wrapped, perforated, corrugated plastic pipe, surrounded on all sides by 150 mm of 10 mm clear crushed stone which is placed at the footing level around the exterior perimeter of the structure. The pipe should have a positive outlet, such as a gravity connection to the storm sewer.

Backfill against the exterior sides of the foundation walls should consist of free draining non frost susceptible granular materials. The greater part of the site excavated materials will be frost susceptible and, as such, are not recommended for re-use as backfill against the foundation walls, unless used in conjunction with a drainage geocomposite, such as Delta Drain 6000, connected to the perimeter foundation drainage system. Imported granular materials, such as clean sand or OPSS Granular B Type I granular material, should otherwise be used for this purpose.

6.2 Protection Against Frost Action

Perimeter footings of heated structures are required to be insulated against the deleterious effect of frost action. A minimum 1.5 m thick soil cover (or equivalent) should be provided in this regard.

A minimum of 2.1 m thick soil cover (or equivalent) should be provided for other exterior unheated footings.

6.3 Excavation Side Slopes

The side slopes of excavations in the soil and fill overburden materials should either be cut back at acceptable slopes or should be retained by shoring systems from the start of the excavation until the structure is backfilled. It is assumed that sufficient room will be available for the greater part of the excavations to be undertaken by open-cut methods (i.e. unsupported excavations).

The excavation side slopes above the groundwater level extending to a maximum depth of 3 m should be cut back at 1H:1V or flatter. The flatter slope is required for excavation below groundwater level. The subsoil at this site is considered to be mainly a Type 2 and 3 soil according to the Occupational Health and Safety Act and Regulations for Construction Projects.

Excavated soil should not be stockpiled directly at the top of excavations and heavy equipment should be kept away from the excavation sides.

Slopes in excess of 3 m in height should be periodically inspected by the geotechnical consultant in order to detect if the slopes are exhibiting signs of distress.

It is recommended that a trench box be used at all times to protect personnel working in trenches with steep or vertical sides. It is expected that services will be installed by “cut and cover” methods and excavations will not be left open for extended periods of time.

6.4 Pipe Bedding and Backfill

Bedding and backfill materials should be in accordance with the most recent Material Specifications and Standard Detail Drawings from the Department of Public Works and Services, Infrastructure Services Branch of the City of Ottawa.

The pipe bedding for sewer and water pipes placed on a relatively dry, undisturbed subgrade surface should consist of at least 150 mm of OPSS Granular A material. Where the bedding is located within the firm grey silty clay, the thickness of the bedding material should be increased to a minimum of 300 mm. The material should be placed in maximum 300 mm thick lifts and compacted to a minimum of 95% of its SPMDD. The bedding material should extend at least to the spring line of the pipe.

The cover material, which should consist of OPSS Granular A, should extend from the spring line of the pipe to at least 300 mm above the obvert of the pipe. The material should be placed in maximum 300 mm thick lifts and compacted to a minimum of 95% of its SPMDD.

Generally, it should be possible to re-use the moist (not wet) brown silty clay above the cover material if the excavation and filling operations are carried out in dry weather conditions. Wet silty clay material will be difficult to re-use, as the high water contents make compacting impractical without an extensive drying period.

Where hard surface areas are considered above the trench backfill, the trench backfill material within the frost zone (about 1.8 m below finished grade) should match the soils exposed at the trench walls to minimize differential frost heaving. The trench backfill should be placed in maximum 300 mm thick loose lifts and compacted to a minimum of 95% of the material’s SPMDD.

To reduce long-term lowering of the groundwater at this site, clay seals should be provided within the service trenches excavated through the silty clay deposit. The seals should be at least 1.5 m long (in the trench direction) and should extend from trench wall to trench wall. The seals should extend from the frost line and fully penetrate the bedding, subbedding and cover material. The barriers should consist of relatively dry and compactable brown silty clay placed in maximum 225 mm thick loose layers and compacted to a minimum of 95% of the SPMDD. The clay seals should be placed at the site boundaries and at strategic locations at no more than 60 m intervals in the service trenches excavated through the silty clay deposit.

6.5 Groundwater Control

Due to the relatively impervious nature of the silty clay materials, it is anticipated that groundwater infiltration into the excavations should be low and controllable using open sumps. The contractor should be prepared to direct water away from all bearing surfaces and subgrades, regardless of the source, to prevent disturbance to the founding medium.

A temporary Ministry of the Environment, Conservation, and Parks (MECP) permit to take water (PTTW) may be required for this project if more than 400,000 L/day of ground and/or surface water is to be pumped during the construction phase. A minimum 4 to 5 months should be allowed for completion of the PTTW application package and issuance of the permit by the MECP.

For typical ground or surface water volumes being pumped during the construction phase, between 50,000 to 400,000 L/day, it is required to register on the Environmental Activity and Sector Registry (EASR). A minimum of two to four weeks should be allotted for completion of the EASR registration and the Water Taking and Discharge Plan to be prepared by a Qualified Person as stipulated under O.Reg. 63/16. If a project qualifies for a PTTW based upon anticipated conditions, an EASR will not be allowed as a temporary dewatering measure while awaiting the MECP review of the PTTW application.

6.6 Winter Construction

The subsurface conditions at this site mostly consist of frost susceptible materials. In presence of water and freezing conditions ice could form within the soil mass. Heaving and settlement upon thawing could occur. Precautions should be taken if winter construction is considered for this project.

In the event of construction during below zero temperatures, the founding stratum should be protected from freezing temperatures by the use of straw, propane heaters, tarpaulins or other suitable means. In this regard, the base of the excavations should be insulated from sub-zero temperatures immediately upon exposure and until such time as heat is adequately supplied to the building and the footings are protected with sufficient soil cover to prevent freezing at founding level.

The trench excavations should be constructed in a manner that will avoid the introduction of frozen materials into the trenches. As well, pavement construction is difficult during winter. The subgrade consists of frost susceptible soils which will experience total and differential frost heaving as the work takes place. In addition, the introduction of frost, snow or ice into the pavement materials, which is difficult to avoid, could adversely affect the performance of the pavement structure. Additional information could be provided, if required.

6.7 Landscaping Considerations

Tree Planting Restrictions - Low to Medium Sensitivity Area

A low to medium sensitivity clay soil was encountered between the anticipated design underside of footing elevations and 3.5 m below finished grade as per City Guidelines in the areas outlined in Drawing PG5036-3 - Tree Planting Setback Recommendations in Appendix 2. Based on our Atterberg limits test results, the modified plasticity index does not exceed 40% in these areas.

The following tree planting setbacks are recommended for the low to medium sensitivity area. Large trees (mature height over 14 m) can be planted within these areas provided a tree to foundation setback equal to the full mature height of the tree can be provided (e.g. in a park or other green space). Tree planting setback limits may be reduced to **4.5 m** for small (mature height up to 7.5m) and medium size trees (mature tree height 7.5 to 14 m), provided that the conditions noted below are met.

- ❒ The underside of footing (USF) is 2.1 m or greater below the lowest finished grade for footings within 10 m from the tree, as measured from the centre of the tree trunk and verified by means of the Grading Plan.

- ❒ A small tree must be provided with a minimum of 25 m^3 of available soils volume while a medium tree must be provided with a minimum of 30 m^3 of available soil volume, as determined by the Landscape Architect. The developer is to ensure that the soil is generally un-compacted when backfilling in street tree planting locations.

- ❒ The tree species must be small (mature tree height up to 7.5 m) to medium size (mature tree height 7.5 m to 14 m) as confirmed by the Landscape Architect.

- ❒ The foundation walls are to be reinforced at least nominally (minimum of two upper and two lower 15M bars in the foundation wall).

- ❒ Grading surrounding the tree must promote drainage to the tree root zone in such a manner as not to be detrimental to the tree), as noted on the subdivision Grading Plan.

Aboveground Swimming Pools

The in-situ soils are considered to be acceptable for in-ground swimming pools. Above ground swimming pools must be placed at least 5 m away from the residence foundation and neighbouring foundations. Otherwise, pool construction is considered routine, and can be constructed in accordance with the manufacturer's recommendations.

Aboveground Hot Tubs

Additional grading around hot tubs should not exceed permissible grade raises. Otherwise, hot tub construction is considered routine, and can be constructed in accordance with the manufacturer's specifications.

Decks and Building Additions

Additional grading around proposed decks or additions should not exceed permissible grade raises. Otherwise, standard construction practices are considered acceptable.

6.8 Slope Stability Assessment

A slope stability analysis was carried out to determine the required construction setback from the top of the bank. Five (5) slope cross-sections were studied as the worst-case scenarios.

Erosional and access allowances were also considered in the determination of limits of hazard lands and are discussed in the following sections. The cross-section locations and the proposed limit of hazard lands are shown on Drawing PG5036-1 - Test Hole Location Plan attached to the current report.

Slope Stability Assessment

The analyses of the stability of the slopes were carried out using SLIDE, a computer program which permits a two-dimensional slope stability analysis using several methods including the Bishop's method, which is a widely used and accepted analysis method. The program calculates a factor of safety, which represents the ratio of the forces resisting failure to those favouring failure. Theoretically, a factor of safety of 1.0 represents a condition where the slope is stable. However, due to intrinsic limitations of the calculation methods and the variability of the subsoil and groundwater conditions, a factor of safety greater than one is usually required to ascertain that the risks of failure are acceptable.

A minimum factor of safety of 1.5 is generally recommended for conditions where the failure of the slope would endanger permanent structures.

The cross-sections were analyzed based on our review of the available topographic mapping. The slope stability analysis was completed at each slope cross-section under worst-case-scenario by assigning cohesive soils under fully saturated conditions. Subsoil conditions at the cross-sections were inferred based on nearby boreholes and general knowledge of the area's geology.

The effective strength soil parameters used for static analysis were chosen based on the subsoil information recovered during the geotechnical investigation. The effective strength soil parameters used for static analysis are presented in Table 7 below.

Table 7 - Effective Soil and Material Parameters (Static Analysis)

Soil Layer	Unit Weight (kN/m^3)	Friction Angle (degrees)	Cohesion (kPa)
Brown Silty Clay Crust	17	33	5
Grey Silty Clay	16	33	10
Glacial Till	20	33	0

The total strength parameters for seismic analysis were chosen based on the in situ, undrained shear strengths recovered within the open boreholes completed at the time of the geotechnical investigation and based on our general knowledge of the geology in the area. The strength parameters used for seismic analysis at the slope cross- sections are presented in Table 8 on the next page.

Table 8 - Total Stress Soil and Material Parameters (Seismic Analysis)			
Soil Layer	**Unit Weight (kN/m^3)**	**Friction Angle (degrees)**	**Undrained Shear Strength (kPa)**
Brown Silty Clay Crust	17	-	150
Grey Silty Clay	16	-	25 to 40
Glacial Till	20	33	0

Static Loading Analysis

The results for the slope stability analyses under static conditions at Sections A, B, C, D and E are shown on Figures 2, 4, 6, 8 and 10, attached to the present report. The factor of safety was found to be greater than 1.5 at Sections A, B, C, D, and E. Based on these results, the slopes are considered to be stable under static loading.

Seismic Loading Analysis

An analysis considering seismic loading was also completed. A horizontal acceleration of 0.16 g was considered for all slopes. A factor of safety of 1.1 is considered to be satisfactory for stability analyses including seismic loading.

The results of the slope stability analyses under seismic conditions are shown on Figures 3, 5, 7, 9, and 11 in Appendix 2. The results indicate that the factors of safety are greater than 1.1 under seismic conditions. Based on these results, the slopes are considered to be stable under seismic loading. Therefore, when considering seismic loading, no geotechnical setback from the top of the slope is required to achieve a factor of safety of 1.1 for the limit of the hazard lands.

Geotechnical Setback - Limit of Hazard Lands

Based on site reconnaissance completed by others, signs of active erosion were noted along portions of the slope. A 5 m toe erosion allowance is deemed appropriate for this slope based on the cohesive nature of the soils, the observed erosion areas and the current watercourse depth and width. It is considered that a toe erosion allowance of 5 m and a toe erosion access allowance of 6 m is required from the top of stable slope (ie.- slope with factor of safety greater than 1.5).

The limit of hazard lands, which include these allowances, is indicated on Drawing PG5036-1 - Test Hole Location Plan attached to the present report.

It is recommended that any existing vegetation on the slope faces not be removed as it contributes to the stability of the slope and reduces erosion.

6.9 Corrosion Potential and Sulphate

Three (3) soil samples were submitted for analytical testing. The analytical test results of the soil samples indicate that the sulphate content is less than 0.01%. These results along with the chloride and pH value are indicative that Type 10 Portland cement (normal cement) would be appropriate for this site. The chloride content and the pH of the sample indicate that they are not significant factors in creating a corrosive environment for exposed ferrous metals at this site, whereas the resistivity is indicative of a moderate to aggressive corrosive environment.

6.10 Global Stability Review

A global stability analysis has been conducted to determine the geotechnical stability for the proposed retaining wall PG5036-Figure 1 Retaining Wall Design Revision 4, located on the south side of the paved way loop at the east boundary of the subject site.

The highest section of the retaining wall (Section F-F') was studied for the proposed global stability analysis at the site under static and seismic conditions based on finished grades presented on the survey plan and borehole data collected from the geotechnical investigation. The cross-section location is presented on Drawing PG5036-1 Revision 6 - Test Hole Location Plan which is included in Appendix 2. The analysis is discussed further below.

Global Stability Analysis

The global stability analysis was modeled in Fine Geo 5, a computer program which permits a two-dimensional slope stability analysis calculating several methods including the Bishop's method, which is a widely accepted slope analysis method. The program calculates a factor of safety, which represents the ratio of the forces resisting failure to forces favoring failure.

Theoretically, a factor of safety of 1.0 represents a condition where the slope is stable. However, due to intrinsic limitations of the calculation methods and the variability of the subsurface soil and groundwater conditions, a factor of safety greater than 1.0 is generally required for the failure risk to be considered acceptable.

A minimum factor of safety of 1.5 is generally recommended for conditions where the slope failure would comprise permanent structures. An analysis considering seismic loading was also completed. A horizontal acceleration of 0.16 g was considered for the sections for the seismic loading condition.

A factor of safety of 1.1 is considered to be satisfactory for stability analyses including seismic loading.

The retaining wall section was reviewed using the design loading according to CHBDC 2015.

Analysis Results

The factor of safety for the retaining wall section was greater than 1.5 for static conditions. Similarly, the results under seismic loading yielded a factor of safety for this section greater than 1.1.

Based on these results, the slopes and retaining wall are considered to be stable under static and seismic loading. Analysis and results completed in Geo5 are presented in Appendix 3.

7.0 Recommendations

It is recommended that the following be completed once the master plan and site development are determined:

- ❒ Review detailed grading plan(s) from a geotechnical perspective.
- ❒ Observation of all bearing surfaces prior to the placement of concrete.
- ❒ Periodic observation of the condition of unsupported excavation side slopes in excess of 3 m in height, if applicable.
- ❒ Observation of all subgrades prior to placing backfilling materials.
- ❒ Field density tests to ensure that the specified level of compaction has been achieved.
- ❒ Sampling and testing of the bituminous concrete including mix design reviews.

A report confirming that these works have been conducted in general accordance with Paterson's recommendations could be issued upon request, following the completion of a satisfactory material testing and observation program by the geotechnical consultant.

8.0 Statement of Limitations

The recommendations made in this report are in accordance with Paterson's present understanding of the project. Paterson requests permission to review the grading plan once available. Paterson's recommendations should also be reviewed when the drawings and specifications are complete.

The client should be aware that any information pertaining to soils and the test hole logs are furnished as a matter of general information only. Test hole descriptions or logs are not to be interpreted as descriptive of conditions at locations other than those of the test holes.

A soils investigation is a limited sampling of a site. Should any conditions at the site be encountered which differ from those at the test locations, Paterson requests to be notified immediately in order to permit reassessment of the recommendations.

The present report applies only to the project described in this document. Use of this report for purposes other than those described herein or by person(s) other than Caivan Communities or their agent(s) is not authorized without review by this firm for the applicability of our recommendations to the altered use of the report.

Paterson Group Inc.

March 14, 2024

LICENSED PROFESSIONAL ENGINEER
D. J. GILBERT
100116130
PROVINCE OF ONTARIO

Kevin A. Pickard, P.Eng.

David J. Gilbert, P.Eng.

Report Distribution:

- ❒ Caivan Communities (e-mail copy)
- ❒ Paterson Group (1 copy)

APPENDIX 1

SOIL PROFILE AND TEST DATA SHEETS

SYMBOLS AND TERMS

SOIL PROFILE AND TEST DATA SHEETS BY OTHERS SYMBOLS AND TERMS BY OTHERS

SEISMIC SITE CLASS TESTING RESULTS BY OTHERS SHRINKAGE LIMIT RESULTS BY OTHERS

ANALYTICAL TESTING RESULTS

patersongroup Consulting Engineers

9 Auriga Drive, Ottawa, Ontario K2E 7T9

SOIL PROFILE AND TEST DATA

Geotechnical Investigation
Prop. Residential Development-Conservancy Lands East
Ottawa, Ontario

DATUM Geodetic

REMARKS

BORINGS BY Excavator **DATE** September 30, 2022

FILE NO. PG5036

HOLE NO. TP 1-22

SOIL DESCRIPTION	STRATA PLOT	SAMPLE TYPE	SAMPLE NUMBER	% RECOVERY	N VALUE or RQD	DEPTH (m)	ELEV. (m)
GROUND SURFACE						0	91.55
FILL: Brown silty clay, some organics		G	1				
0.23							
Loose to compact, dark brown **SILTY SAND to SANDY SILT,** trace clay and organics		G	2				
0.50							
		G	3				
Stiff to very stiff, brown **SILTY CLAY,** trace to some sand						1	90.55
		G	4				
1.25		G	5				
End of Test Pit							
(Groundwater infiltration at 1.05m depth)							

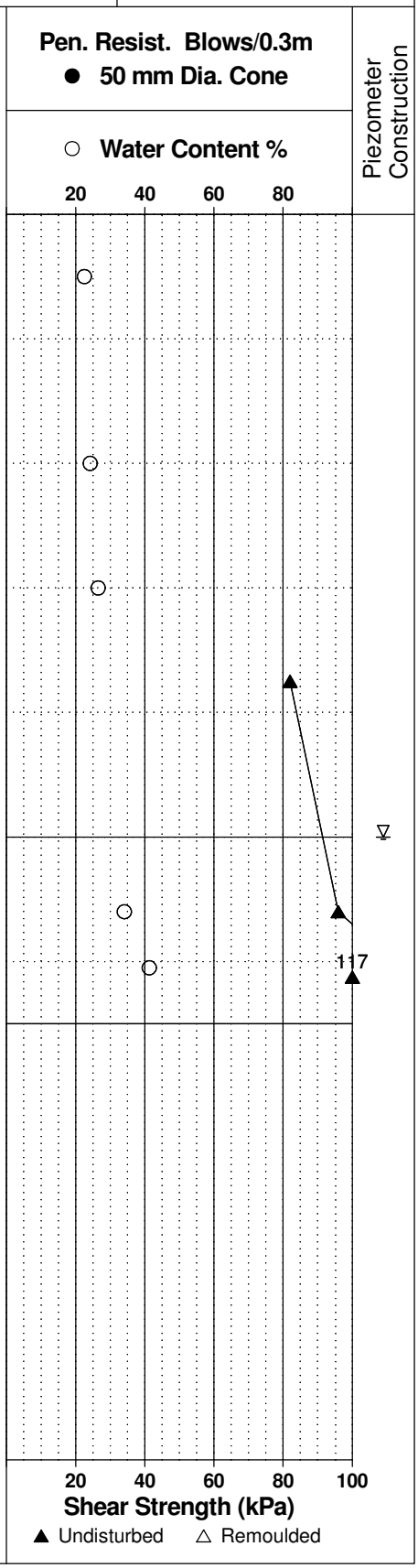

Piezometer Construction

patersongroup Consulting Engineers

9 Auriga Drive, Ottawa, Ontario K2E 7T9

SOIL PROFILE AND TEST DATA

Geotechnical Investigation
Prop. Residential Development-Conservancy Lands East
Ottawa, Ontario

DATUM Geodetic

REMARKS

BORINGS BY Excavator **DATE** September 30, 2022

FILE NO. PG5036

HOLE NO. TP 2-22

SOIL DESCRIPTION	STRATA PLOT	SAMPLE TYPE	SAMPLE NUMBER	SAMPLE % RECOVERY	SAMPLE N VALUE or RQD	DEPTH (m)	ELEV. (m)
GROUND SURFACE						0	91.41
FILL: Brown silty clay, some sand, occasional gravel and cobbles (0.36)		G	1				
Loose to compact, dark brown **SILTY SAND to SANDY SILT,** trace to some clay (0.59)		G	2				
Very stiff, brown **SILTY CLAY,** some sand (0.80)		G	3				
End of Test Pit							
(TP dry upon completion)							

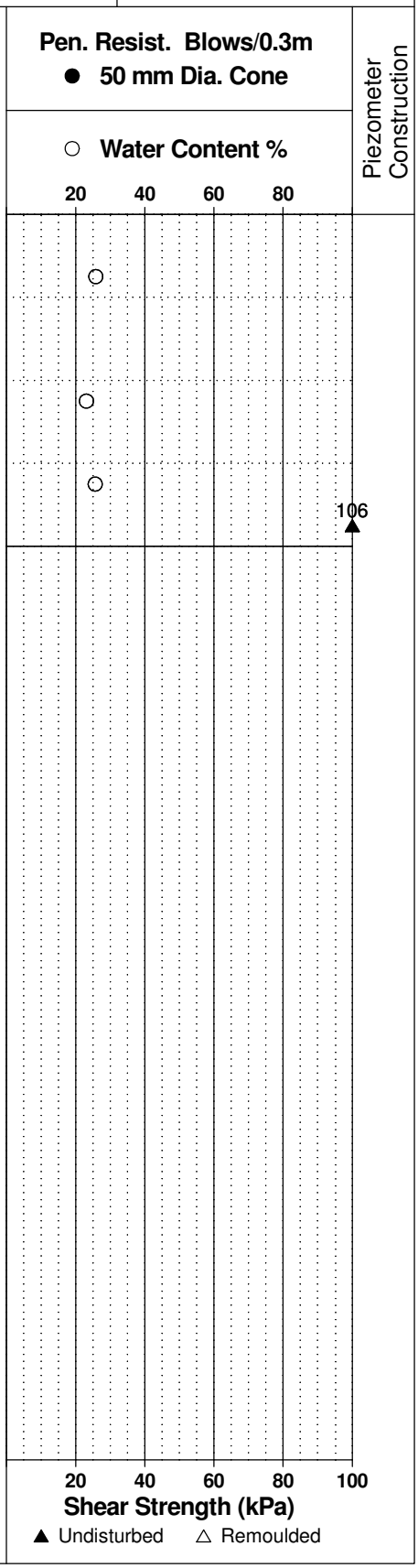

Piezometer Construction

patersongroup Consulting Engineers

9 Auriga Drive, Ottawa, Ontario K2E 7T9

SOIL PROFILE AND TEST DATA

Geotechnical Investigation
Prop. Residential Development-Conservancy Lands East
Ottawa, Ontario

DATUM Geodetic

REMARKS

BORINGS BY Excavator **DATE** September 30, 2022

FILE NO. PG5036

HOLE NO. TP 3-22

SOIL DESCRIPTION	STRATA PLOT	SAMPLE TYPE	SAMPLE NUMBER	SAMPLE % RECOVERY	SAMPLE N VALUE or RQD	DEPTH (m)	ELEV. (m)
GROUND SURFACE						0	91.40
FILL: Brown silty clay, some sand (0.10)							
Loose to compact, dark brown **SILTY SAND to SANDY SILT,** trace clay (0.35)		G	1				
Hard to very stiff, brown **SILTY CLAY,** some sand - sand seams at 0.4 to 0.45m and 0.5 to 0.6m depths (1.10)		G	2			1	90.40
End of Test Pit (Groundwater infiltration at 0.9m depth)							

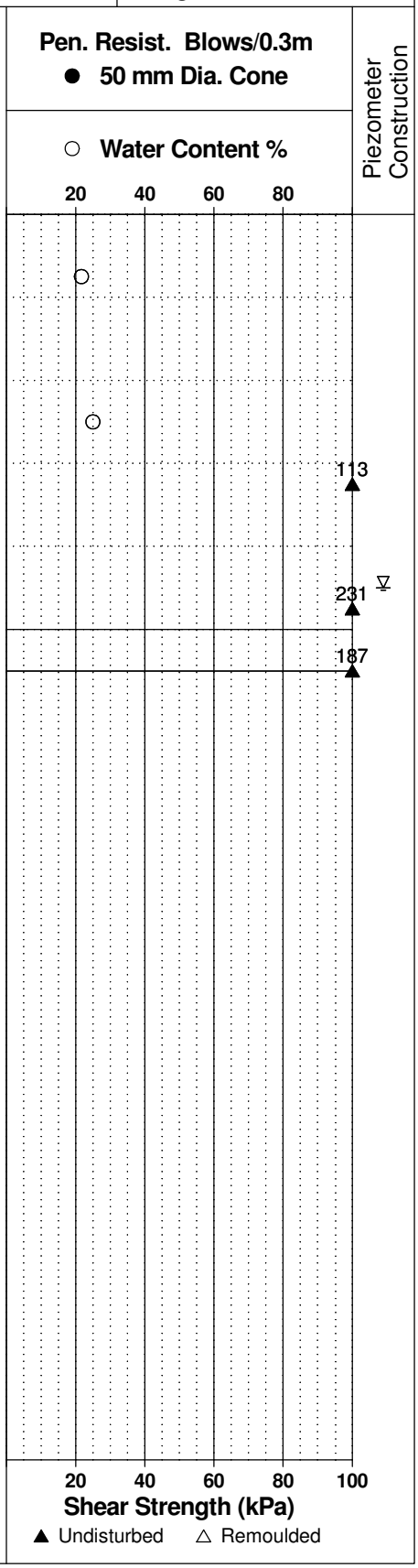

patersongroup Consulting Engineers

9 Auriga Drive, Ottawa, Ontario K2E 7T9

SOIL PROFILE AND TEST DATA

Geotechnical Investigation
Prop. Residential Development-Conservancy Lands East
Ottawa, Ontario

DATUM Geodetic

REMARKS

BORINGS BY Excavator **DATE** September 30, 2022

FILE NO. PG5036

HOLE NO. TP 4-22

SOIL DESCRIPTION	STRATA PLOT	SAMPLE TYPE	SAMPLE NUMBER	% RECOVERY	N VALUE or RQD	DEPTH (m)	ELEV. (m)
GROUND SURFACE						0	91.55
FILL: Brown silty clay with sand (0.30)		G	1				
Loose to compact, dark brown **SILTY SAND to SANDY SILT,** trace to some clay (0.53)		G	2				
Very stiff, brown **SILTY CLAY,** trace sand (1.25)		G	3				
		G	4			1	90.55
End of Test Pit							
(Groundwater infiltration at 1.0m depth)							

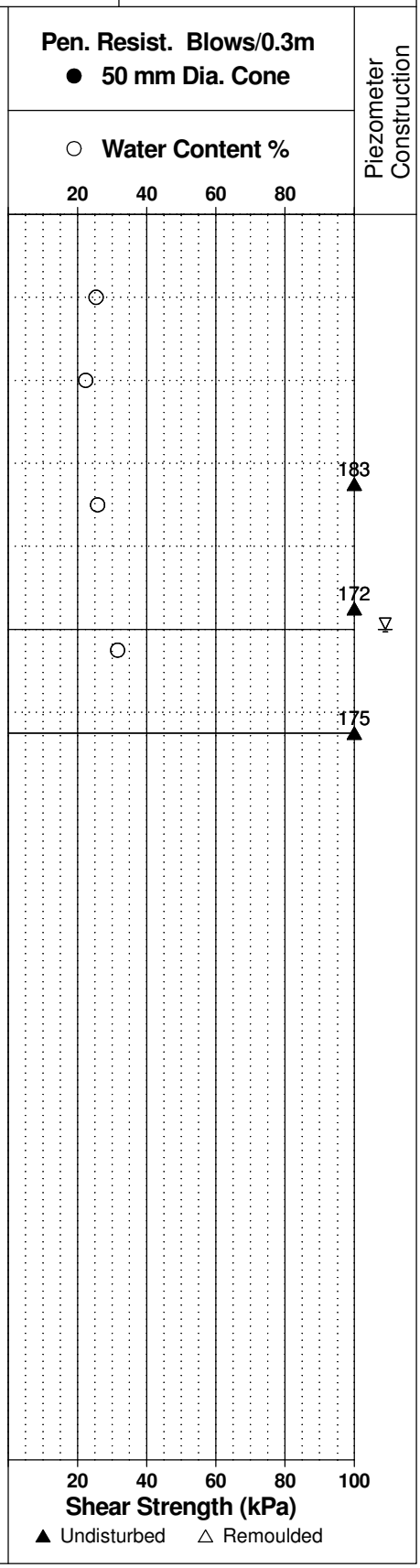

patersongroup Consulting Engineers

9 Auriga Drive, Ottawa, Ontario K2E 7T9

SOIL PROFILE AND TEST DATA

Geotechnical Investigation
Prop. Residential Development-Conservancy Lands East
Ottawa, Ontario

DATUM Geodetic

REMARKS

BORINGS BY Excavator **DATE** September 30, 2022

FILE NO. PG5036

HOLE NO. TP 5-22

SOIL DESCRIPTION	STRATA PLOT	SAMPLE TYPE	SAMPLE NUMBER	SAMPLE % RECOVERY	SAMPLE N VALUE or RQD	DEPTH (m)	ELEV. (m)
GROUND SURFACE						0	91.58
FILL: Brown silty clay, some sand (0.30)		G	1				
Loose to compact, dark brown **SILTY SAND to SANDY SILT,** trace clay (0.51)		G	2				
Very stiff, brown **SILTY CLAY,** trace sand		G	3				
		G	4			1	90.58
(1.10) End of Test Pit							
(Groundwater infiltration at bottom of test pit)							

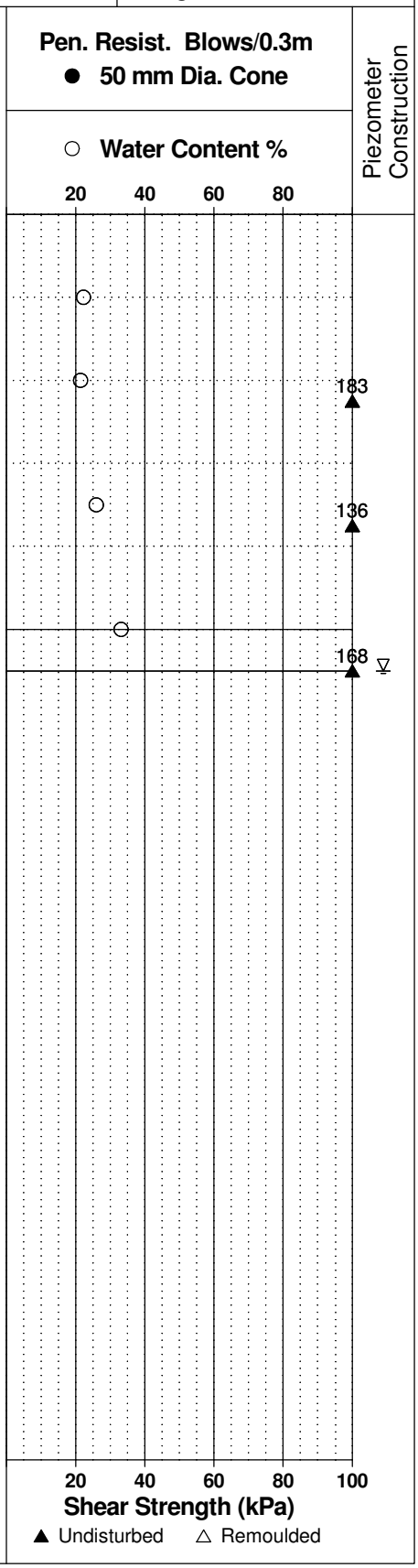

patersongroup Consulting Engineers

9 Auriga Drive, Ottawa, Ontario K2E 7T9

SOIL PROFILE AND TEST DATA

Geotechnical Investigation
Prop. Residential Development-Conservancy Lands East
Ottawa, Ontario

DATUM Geodetic

REMARKS

BORINGS BY Excavator **DATE** September 30, 2022

FILE NO. PG5036

HOLE NO. TP 6-22

SOIL DESCRIPTION	STRATA PLOT	SAMPLE TYPE	SAMPLE NUMBER	% RECOVERY	N VALUE or RQD	DEPTH (m)	ELEV. (m)
GROUND SURFACE						0	91.55
FILL: Brown silty clay, trace sand (0.24)		G	1				
Loose to compact, dark brown **SILTY SAND to SANDY SILT,** trace clay (0.46)		G	2				
Very stiff to hard, brown **SILTY CLAY,** some sand (1.00)		G	3				
End of Test Pit						1	90.55
(Low groundwater infiltration at bottom of test pit)							

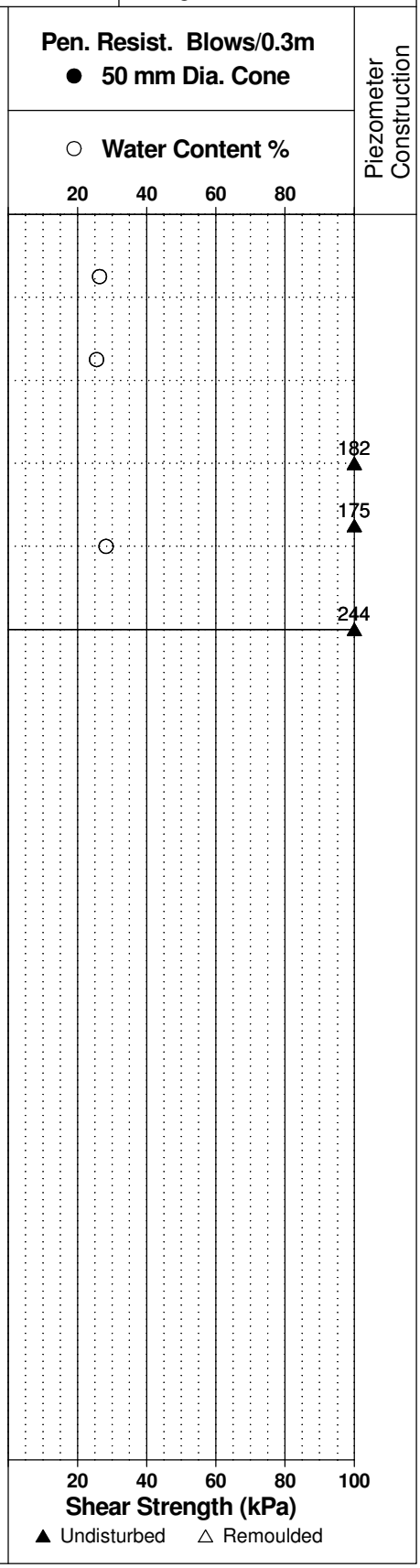

patersongroup Consulting Engineers

9 Auriga Drive, Ottawa, Ontario K2E 7T9

SOIL PROFILE AND TEST DATA

Geotechnical Investigation
Prop. Residential Development-Conservancy Lands East
Ottawa, Ontario

DATUM Geodetic

REMARKS

BORINGS BY Excavator **DATE** September 30, 2022

FILE NO. PG5036

HOLE NO. TP 7-22

SOIL DESCRIPTION	STRATA PLOT	SAMPLE TYPE	SAMPLE NUMBER	SAMPLE % RECOVERY	SAMPLE N VALUE or RQD	DEPTH (m)	ELEV. (m)
GROUND SURFACE						0	91.55
FILL: Brown sitly clay, some sand (0.20)		G	1				
Loose to compact, dark brown **SILTY SAND to SANDY SILT,** trace clay and topsoil (0.41)		G	2				
Very stiff, brown **SILTY CLAY,** trace sand (1.00)		G	3				
End of Test Pit						1	90.55
(Groundwater infiltration at bottom of test pit)							

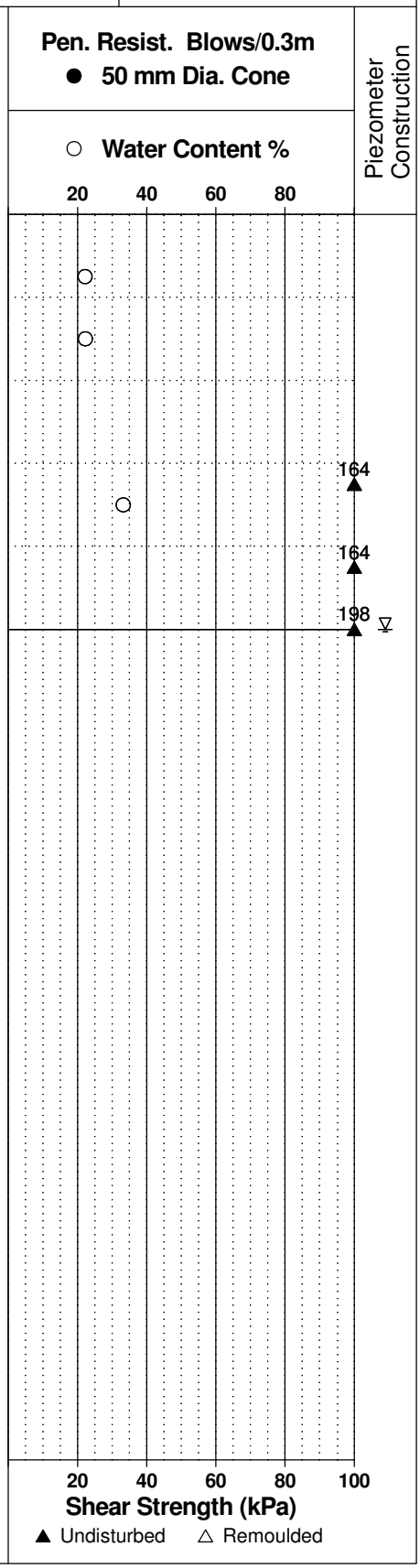

patersongroup Consulting Engineers

9 Auriga Drive, Ottawa, Ontario K2E 7T9

SOIL PROFILE AND TEST DATA

Geotechnical Investigation
Prop. Residential Development-Conservancy Lands East
Ottawa, Ontario

DATUM Geodetic

REMARKS

BORINGS BY Excavator **DATE** September 30, 2022

FILE NO. PG5036

HOLE NO. TP 8-22

SOIL DESCRIPTION	STRATA PLOT	SAMPLE TYPE	SAMPLE NUMBER	SAMPLE % RECOVERY	SAMPLE N VALUE or RQD	DEPTH (m)	ELEV. (m)
GROUND SURFACE						0	91.68
TOPSOIL 0.10							
FILL: Brown silty clay, some sand, trace debris 0.35		G	1				
Loose to compact, dark brown **SILTY SAND to SANDY SILT,** trace clay 0.60		G	2				
Very stiff to hard, brown **SILTY CLAY,** some sand 1.00		G	3				
End of Test Pit						1	90.68
(TP dry upon completion)							

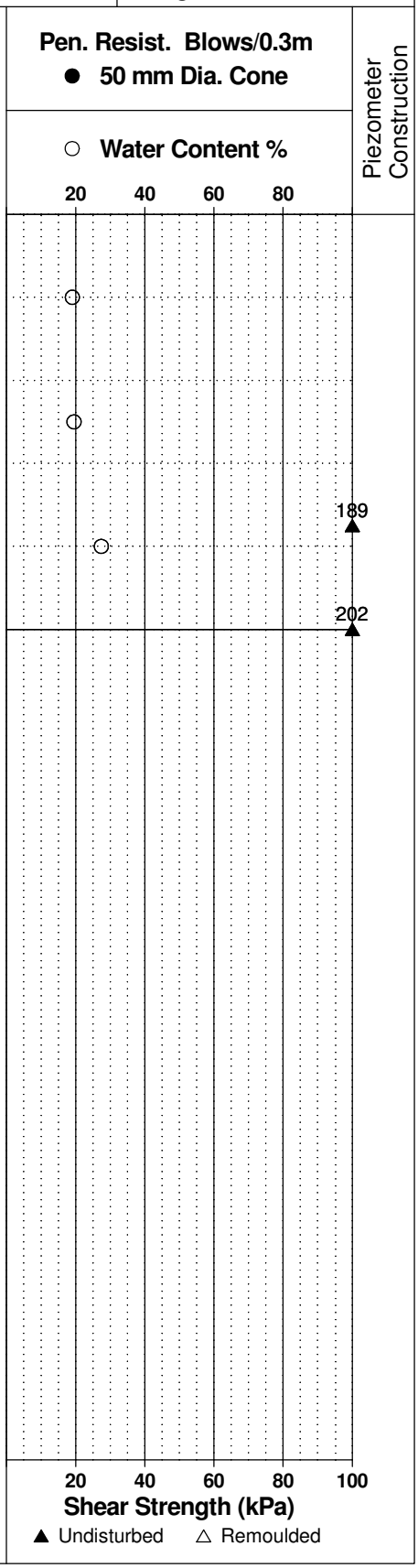

Piezometer Construction

patersongroup Consulting Engineers

9 Auriga Drive, Ottawa, Ontario K2E 7T9

SOIL PROFILE AND TEST DATA

Geotechnical Investigation
Prop. Residential Development-Conservancy Lands East
Ottawa, Ontario

DATUM Geodetic

REMARKS

BORINGS BY Excavator **DATE** November 18, 2022

FILE NO. PG5036

HOLE NO. TP 9-22

SOIL DESCRIPTION	STRATA PLOT	SAMPLE TYPE	SAMPLE NUMBER	SAMPLE % RECOVERY	SAMPLE N VALUE or RQD	DEPTH (m)	ELEV. (m)	Pen. Resist. Blows/0.3m ● 50 mm Dia. Cone ○ Water Content %	Piezometer Construction
GROUND SURFACE						0	91.67		
		G	1						
		G	2						
Stiff, brown **SILTY CLAY,** trace some sand						1	90.67		
		G	8						
2.03						2	89.67		
End of Test Pit									

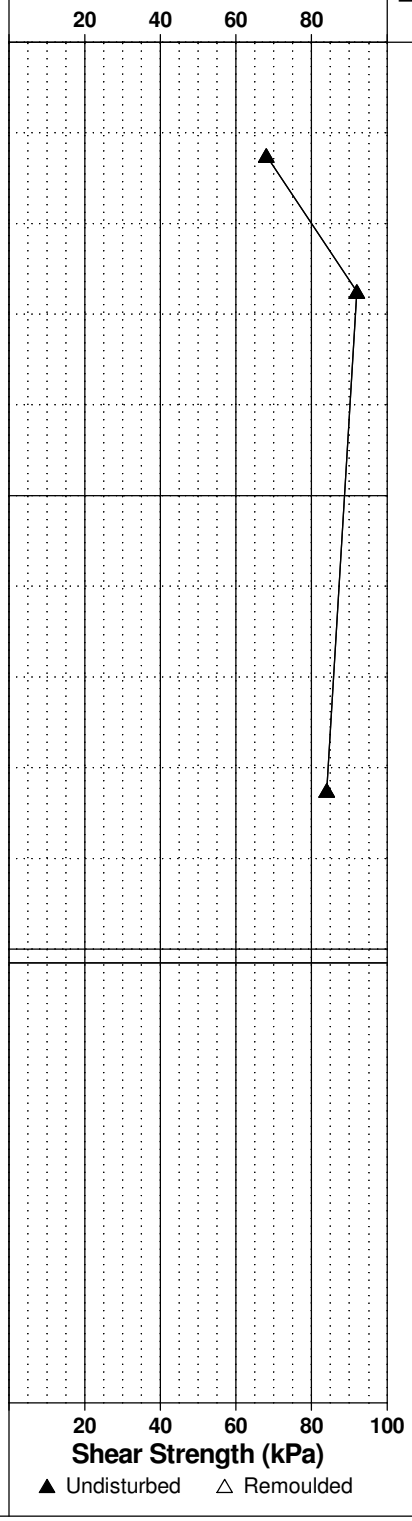

patersongroup Consulting Engineers

9 Auriga Drive, Ottawa, Ontario K2E 7T9

SOIL PROFILE AND TEST DATA

Geotechnical Investigation
Prop. Residential Development-Conservancy Lands East
Ottawa, Ontario

DATUM Geodetic

REMARKS

BORINGS BY Excavator **DATE** November 18, 2022

FILE NO. PG5036

HOLE NO. TP10-22

SOIL DESCRIPTION	STRATA PLOT	SAMPLE TYPE	SAMPLE NUMBER	SAMPLE % RECOVERY	SAMPLE N VALUE or RQD	DEPTH (m)	ELEV. (m)	Pen. Resist. Blows/0.3m ● 50 mm Dia. Cone ○ Water Content %	Piezometer Construction
GROUND SURFACE						0	91.50		
Stiff, brown **SILTY CLAY,** trace to some sand		G	1						
		G	2						
						1	90.50		
		G	3						
1.83									
End of Test Pit									

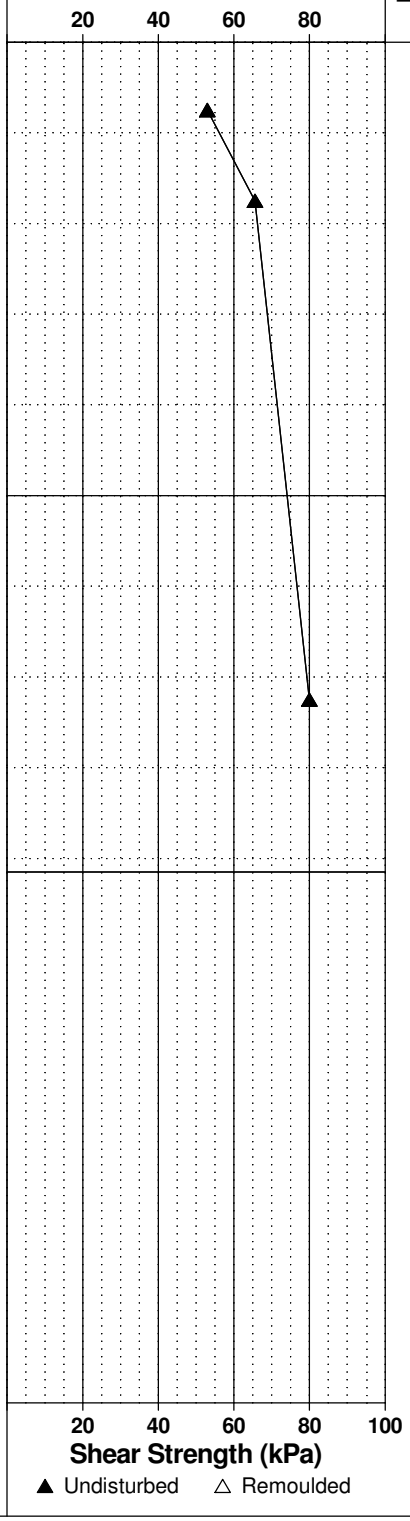

patersongroup Consulting Engineers

9 Auriga Drive, Ottawa, Ontario K2E 7T9

SOIL PROFILE AND TEST DATA

Geotechnical Investigation
Prop. Residential Development-Conservancy Lands East
Ottawa, Ontario

DATUM Geodetic

REMARKS

BORINGS BY Excavator **DATE** November 18, 2022

FILE NO. PG5036

HOLE NO. TP11-22

SOIL DESCRIPTION	STRATA PLOT	SAMPLE TYPE	SAMPLE NUMBER	SAMPLE % RECOVERY	SAMPLE N VALUE or RQD	DEPTH (m)	ELEV. (m)	Pen. Resist. Blows/0.3m ● 50 mm Dia. Cone ○ Water Content %	Piezometer Construction
GROUND SURFACE						0	91.68		
Firm to stiff, brown **SILTY CLAY,** trace to some sand		G	1						
		G	2						
		G	3						
						1	90.68		
		G	4						
1.83									
End of Test Pit									

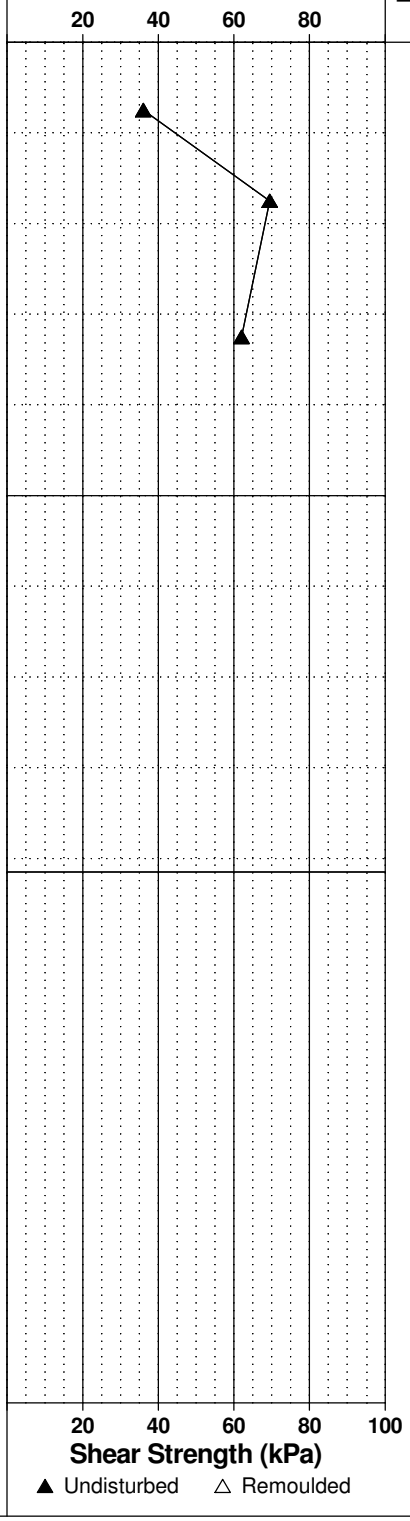

patersongroup Consulting Engineers

9 Auriga Drive, Ottawa, Ontario K2E 7T9

SOIL PROFILE AND TEST DATA

Geotechnical Investigation
Prop. Residential Development-Conservancy Lands East
Ottawa, Ontario

DATUM Geodetic

REMARKS

BORINGS BY Excavator **DATE** November 30, 2022

FILE NO. PG5036

HOLE NO. TP12-22

SOIL DESCRIPTION	STRATA PLOT	SAMPLE TYPE	SAMPLE NUMBER	SAMPLE % RECOVERY	SAMPLE N VALUE or RQD	DEPTH (m)	ELEV. (m)	Pen. Resist. Blows/0.3m ● 50 mm Dia. Cone ○ Water Content % (20 40 60 80)	Piezometer Construction
GROUND SURFACE						0	91.69		
FILL: Grey-brown silty clay with sand and organics		G	1						
0.49									
Stiff, brown **SILTY CLAY,** trace to some sand		G	2			1	90.69		
		G	3						
1.79									
End of Test Pit									

Shear Strength (kPa): 20 40 60 80 100

▲ Undisturbed △ Remoulded

patersongroup Consulting Engineers

9 Auriga Drive, Ottawa, Ontario K2E 7T9

SOIL PROFILE AND TEST DATA

Geotechnical Investigation
Prop. Residential Development-Conservancy Lands East
Ottawa, Ontario

DATUM Geodetic

REMARKS

BORINGS BY Excavator **DATE** November 30, 2022

FILE NO. PG5036

HOLE NO. TP13-22

SOIL DESCRIPTION	STRATA PLOT	SAMPLE TYPE	SAMPLE NUMBER	SAMPLE % RECOVERY	SAMPLE N VALUE or RQD	DEPTH (m)	ELEV. (m)	Pen. Resist. Blows/0.3m ● 50 mm Dia. Cone ○ Water Content % (20 40 60 80)	Piezometer Construction
GROUND SURFACE						0	91.86		
FILL: Brown to grey silty clay, trace sand, organics, topsoil		G	1						
		G	2						
0.60									
		G	3			1	90.86		
Stiff, brown **SILTY CLAY,** trace to some sand		G	4					130	▽
2.07						2	89.86		
End of Test Pit (Groundwater infiltration at 1.4m depth)									

Shear Strength (kPa): 20 40 60 80 100

▲ Undisturbed △ Remoulded

patersongroup Consulting Engineers

9 Auriga Drive, Ottawa, Ontario K2E 7T9

SOIL PROFILE AND TEST DATA

Geotechnical Investigation
Prop. Residential Development-Conservancy Lands East
Ottawa, Ontario

DATUM Geodetic

REMARKS

BORINGS BY Excavator **DATE** November 30, 2022

FILE NO. PG5036

HOLE NO. TP14-22

SOIL DESCRIPTION	STRATA PLOT	SAMPLE TYPE	SAMPLE NUMBER	% RECOVERY	N VALUE or RQD	DEPTH (m)	ELEV. (m)	Pen. Resist. Blows/0.3m ● 50 mm Dia. Cone ○ Water Content %	Piezometer Construction
GROUND SURFACE						0	91.18		
FILL: Brown silty clay with topsoil		G	1						
0.19									
Very stiff, brown **SILTY CLAY,** trace to some sand		G	2			1	90.18		
		G	3					121	∇
1.79									
End of Test Pit (Groundwater infiltration at 1.4m depth)									

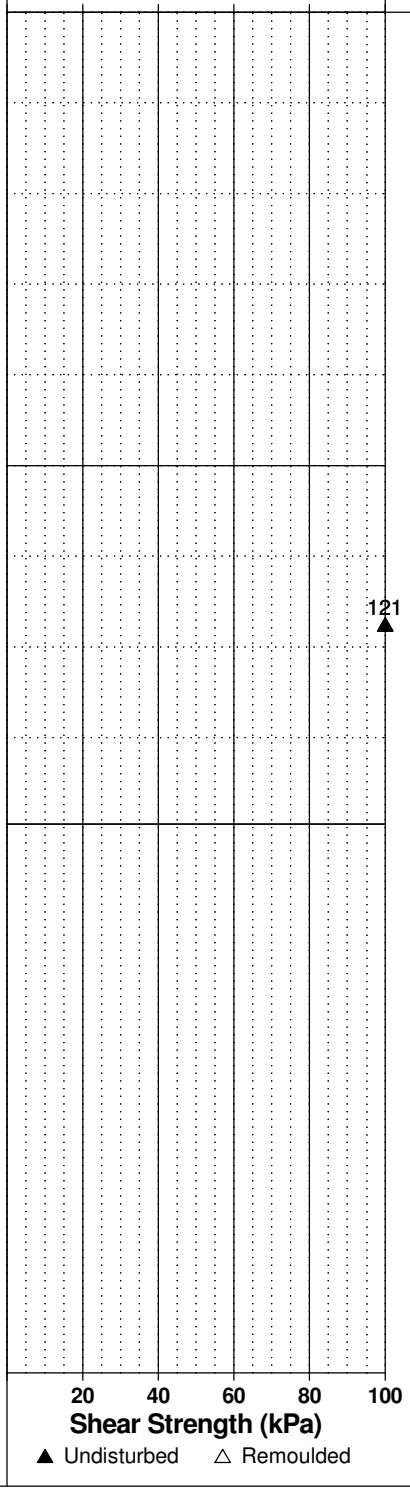

patersongroup Consulting Engineers

9 Auriga Drive, Ottawa, Ontario K2E 7T9

SOIL PROFILE AND TEST DATA

Geotechnical Investigation
Prop. Residential Development-Conservancy Lands East
Ottawa, Ontario

DATUM Geodetic

REMARKS

BORINGS BY Excavator **DATE** November 30, 2022

FILE NO. PG5036

HOLE NO. TP15-22

SOIL DESCRIPTION	STRATA PLOT	SAMPLE TYPE	SAMPLE NUMBER	SAMPLE % RECOVERY	SAMPLE N VALUE or RQD	DEPTH (m)	ELEV. (m)	Pen. Resist. Blows/0.3m ● 50 mm Dia. Cone ○ Water Content %	Piezometer Construction
GROUND SURFACE						0	91.27		
FILL: Brown silty clay with topsoil		G	1						
0.21									
Stiff, brown **SILTY CLAY,** trace some sand		G	2			1	90.27		
		G	3					▲	▽
1.73									
End of Test Pit (Groundwater infiltration at 1.3m depth)									

Pen. Resist. Scale: 20, 40, 60, 80

Shear Strength (kPa): 20, 40, 60, 80, 100

▲ Undisturbed △ Remoulded

SYMBOLS AND TERMS

SOIL DESCRIPTION

Behavioural properties, such as structure and strength, take precedence over particle gradation in describing soils. Terminology describing soil structure are as follows:

Desiccated	-	having visible signs of weathering by oxidation of clay minerals, shrinkage cracks, etc.
Fissured	-	having cracks, and hence a blocky structure.
Varved	-	composed of regular alternating layers of silt and clay.
Stratified	-	composed of alternating layers of different soil types, e.g. silt and sand or silt and clay.
Well-Graded	-	Having wide range in grain sizes and substantial amounts of all intermediate particle sizes (see Grain Size Distribution).
Uniformly-Graded	-	Predominantly of one grain size (see Grain Size Distribution).

The standard terminology to describe the relative strength of cohesionless soils is the compactness condition, usually inferred from the results of the Standard Penetration Test (SPT) 'N' value. The SPT N value is the number of blows of a 63.5 kg hammer, falling 760 mm, required to drive a 51 mm O.D. split spoon sampler 300 mm into the soil after an initial penetration of 150 mm. An SPT N value of "P" denotes that the split-spoon sampler was pushed 300 mm into the soil without the use of a falling hammer.

Compactness Condition	'N' Value	Relative Density %
Very Loose	<4	<15
Loose	4-10	15-35
Compact	10-30	35-65
Dense	30-50	65-85
Very Dense	>50	>85

The standard terminology to describe the strength of cohesive soils is the consistency, which is based on the undisturbed undrained shear strength as measured by the in situ or laboratory shear vane tests, unconfined compression tests, or occasionally by the Standard Penetration Test (SPT). Note that the typical correlations of undrained shear strength to SPT N value (tabulated below) tend to underestimate the consistency for sensitive silty clays, so Paterson reviews the applicable split spoon samples in the laboratory to provide a more representative consistency value based on tactile examination.

Consistency	Undrained Shear Strength (kPa)	'N' Value
Very Soft	<12	<2
Soft	12-25	2-4
Firm	25-50	4-8
Stiff	50-100	8-15
Very Stiff	100-200	15-30
Hard	>200	>30

SYMBOLS AND TERMS (continued)

SOIL DESCRIPTION (continued)

Cohesive soils can also be classified according to their “sensitivity”. The sensitivity, S_t, is the ratio between the undisturbed undrained shear strength and the remoulded undrained shear strength of the soil. The classes of sensitivity may be defined as follows:

Low Sensitivity:	$S_t < 2$
Medium Sensitivity:	$2 < S_t < 4$
Sensitive:	$4 < S_t < 8$
Extra Sensitive:	$8 < S_t < 16$
Quick Clay:	$S_t > 16$

ROCK DESCRIPTION

The structural description of the bedrock mass is based on the Rock Quality Designation (RQD).

The RQD classification is based on a modified core recovery percentage in which all pieces of sound core over 100 mm long are counted as recovery. The smaller pieces are considered to be a result of closely-spaced discontinuities (resulting from shearing, jointing, faulting, or weathering) in the rock mass and are not counted. RQD is ideally determined from NQ or larger size core. However, it can be used on smaller core sizes, such as BQ, if the bulk of the fractures caused by drilling stresses (called “mechanical breaks”) are easily distinguishable from the normal in situ fractures.

RQD %	ROCK QUALITY
90-100	Excellent, intact, very sound
75-90	Good, massive, moderately jointed or sound
50-75	Fair, blocky and seamy, fractured
25-50	Poor, shattered and very seamy or blocky, severely fractured
0-25	Very poor, crushed, very severely fractured

SAMPLE TYPES

SS	-	Split spoon sample (obtained in conjunction with the performing of the Standard Penetration Test (SPT))
TW	-	Thin wall tube or Shelby tube, generally recovered using a piston sampler
G	-	"Grab" sample from test pit or surface materials
AU	-	Auger sample or bulk sample
WS	-	Wash sample
RC	-	Rock core sample (Core bit size BQ, NQ, HQ, etc.). Rock core samples are obtained with the use of standard diamond drilling bits.

SYMBOLS AND TERMS (continued)

PLASTICITY LIMITS AND GRAIN SIZE DISTRIBUTION

WC%	-	Natural water content or water content of sample, %
LL	-	Liquid Limit, % (water content above which soil behaves as a liquid)
PL	-	Plastic Limit, % (water content above which soil behaves plastically)
PI	-	Plasticity Index, % (difference between LL and PL)
Dxx	-	Grain size at which xx% of the soil, by weight, is of finer grain sizes These grain size descriptions are not used below 0.075 mm grain size
D10	-	Grain size at which 10% of the soil is finer (effective grain size)
D60	-	Grain size at which 60% of the soil is finer
Cc	-	Concavity coefficient = $(D30)^2 / (D10 \times D60)$
Cu	-	Uniformity coefficient = D60 / D10

Cc and Cu are used to assess the grading of sands and gravels:
Well-graded gravels have: $1 < Cc < 3$ and $Cu > 4$
Well-graded sands have: $1 < Cc < 3$ and $Cu > 6$
Sands and gravels not meeting the above requirements are poorly-graded or uniformly-graded.
Cc and Cu are not applicable for the description of soils with more than 10% silt and clay (more than 10% finer than 0.075 mm or the #200 sieve)

CONSOLIDATION TEST

p'_o	-	Present effective overburden pressure at sample depth
p'_c	-	Preconsolidation pressure of (maximum past pressure on) sample
Ccr	-	Recompression index (in effect at pressures below p'_c)
Cc	-	Compression index (in effect at pressures above p'_c)
OC Ratio		Overconsolidaton ratio = p'_c / p'_o
Void Ratio		Initial sample void ratio = volume of voids / volume of solids
Wo	-	Initial water content (at start of consolidation test)

PERMEABILITY TEST

k	-	Coefficient of permeability or hydraulic conductivity is a measure of the ability of water to flow through the sample. The value of k is measured at a specified unit weight for (remoulded) cohesionless soil samples, because its value will vary with the unit weight or density of the sample during the test.

SYMBOLS AND TERMS (continued)

STRATA PLOT

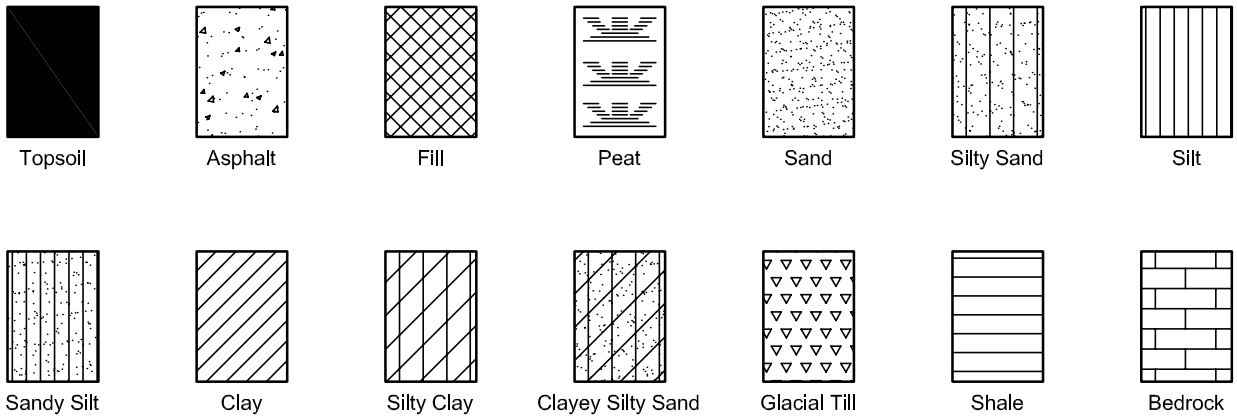

MONITORING WELL AND PIEZOMETER CONSTRUCTION

MONITORING WELL CONSTRUCTION

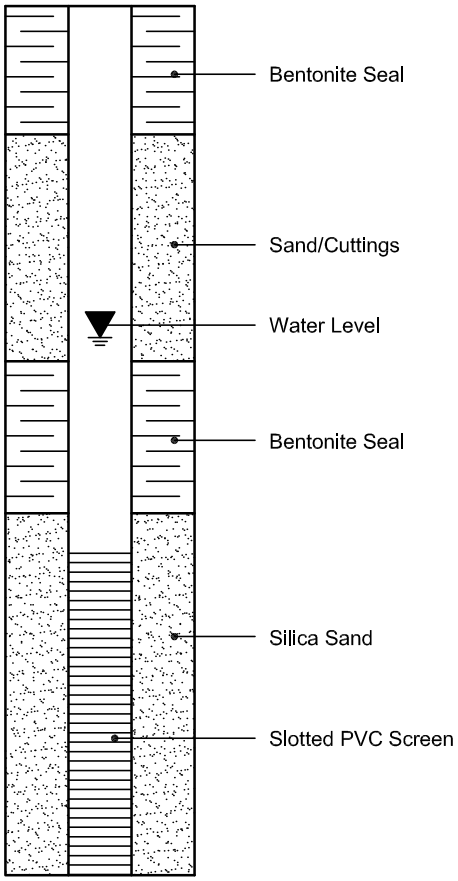

PIEZOMETER CONSTRUCTION

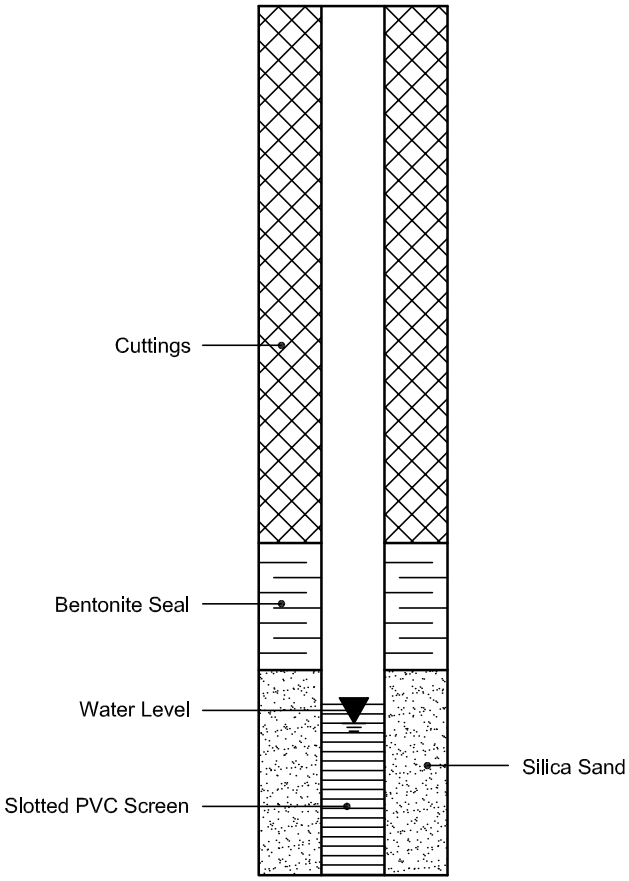

PROJECT: 1771847

RECORD OF BOREHOLE: 17-11

SHEET 1 OF 1

LOCATION: N 5013105.9 ;E 362455.0

BORING DATE: February 15, 2017

DATUM: CGVD28

SAMPLER HAMMER, 64kg; DROP, 760mm

PENETRATION TEST HAMMER, 64kg; DROP, 760mm

DEPTH SCALE METRES	BORING METHOD	SOIL PROFILE: DESCRIPTION	STRATA PLOT	ELEV. / DEPTH (m)	SAMPLES: NUMBER	TYPE	BLOWS/0.30m	DYNAMIC PENETRATION RESISTANCE, BLOWS/0.3m (20 40 60 80)	SHEAR STRENGTH Cu, kPa (nat V. + Q - ●; rem V. ⊕ U - ○) (20 40 60 80)	HYDRAULIC CONDUCTIVITY, k, cm/s (10^{-6} 10^{-5} 10^{-4} 10^{-3})	WATER CONTENT PERCENT (Wp — W — Wl; 20 40 60 80)	ADDITIONAL LAB. TESTING	PIEZOMETER OR STANDPIPE INSTALLATION
		GROUND SURFACE		91.19									
0	Power Auger, 200 mm Diam. (Hollow Stem)	TOPSOIL - (SM) SILTY SAND; dark brown; moist		0.00 / 0.08									Bentonite Seal
		(CL/CI/CH) SILTY CLAY to CLAY; grey brown (WEATHERED CRUST); cohesive, w>PL, very stiff to firm											
1					1	SS	4						
					2	SS	2						
2													Bentonite and Cuttings Mix
					3	SS	WH						
				88.29									
3		(CI/CH) SILTY CLAY to CLAY; grey with black organic mottling; cohesive, w>PL, soft to firm		2.90									
					4	SS	WH						Bentonite Seal
													Silica Sand
4								⊕	+				
								⊕	+				51 mm Diam. PVC #10 Slot Screen
					5	SS	WH						
5													Silica Sand
								⊕	+				
								⊕	+				
6													
					6	SS	WH						Native Backfill
7								⊕	+				
								⊕	+				
				83.57									
		End of Borehole		7.62				⊕	+				
													WL in Screen at Elev. 90.46 m on February 21, 2017
8													
9													
10													

DEPTH SCALE

1 : 50

Golder Associates

LOGGED: DG

CHECKED: SD

PROJECT: 1771847

RECORD OF BOREHOLE: 17-12

SHEET 1 OF 1

LOCATION: N 5013250.9 ;E 362714.3

BORING DATE: February 15, 2017

DATUM: CGVD28

SAMPLER HAMMER, 64kg; DROP, 760mm

PENETRATION TEST HAMMER, 64kg; DROP, 760mm

DEPTH SCALE METRES	BORING METHOD	SOIL PROFILE: DESCRIPTION	STRATA PLOT	ELEV. / DEPTH (m)	SAMPLES: NUMBER	TYPE	BLOWS/0.30m	DYNAMIC PENETRATION RESISTANCE, BLOWS/0.3m (20 40 60 80) / SHEAR STRENGTH Cu, kPa (nat V. + Q - ●; rem V. ⊕ U - ○) (20 40 60 80)	HYDRAULIC CONDUCTIVITY, k, cm/s (10^{-6} 10^{-5} 10^{-4} 10^{-3}) / WATER CONTENT PERCENT (Wp ⊖W WI; 20 40 60 80)	ADDITIONAL LAB. TESTING	PIEZOMETER OR STANDPIPE INSTALLATION
		GROUND SURFACE		91.47							
0	Power Auger, 200 mm Diam. (Hollow Stem)	TOPSOIL - (SM) SILTY SAND; dark grey; moist		0.00 / 0.08							
		(CL/CI/CH) SILTY CLAY to CLAY; grey brown, contains sandy silt to silty sand layers (WEATHERED CRUST); cohesive, w>PL, very stiff to firm									
1					1	SS	4				
					2	SS	2				
2											
		(CI/CH) SILTY CLAY to CLAY, with sandy silt layers; grey with black organic mottling; cohesive, w>PL, firm		88.73 / 2.74							
3					3	SS	WH				
4											
					4	SS	WH				
5											
6											
					5	SS	WH				
7											
		End of Borehole		83.85 / 7.62							
8											
9											
10											

DEPTH SCALE

1 : 50

Golder Associates

LOGGED: DG

CHECKED: SD

MIS-BHS 001 1771847.GPJ GAL-MIS.GDT 09/12/17 JEM

PROJECT: 1771847

RECORD OF BOREHOLE: 17-13

SHEET 1 OF 1

LOCATION: N 5013391.6 ;E 362965.1

BORING DATE: February 15, 2017

DATUM: CGVD28

SAMPLER HAMMER, 64kg; DROP, 760mm

PENETRATION TEST HAMMER, 64kg; DROP, 760mm

DEPTH SCALE METRES	BORING METHOD	SOIL PROFILE: DESCRIPTION	STRATA PLOT	ELEV. / DEPTH (m)	SAMPLES: NUMBER	TYPE	BLOWS/0.30m	DYNAMIC PENETRATION RESISTANCE, BLOWS/0.3m (20 40 60 80) / SHEAR STRENGTH Cu, kPa (nat V. + Q - ●; rem V. ⊕ U - ○) (20 40 60 80)	HYDRAULIC CONDUCTIVITY, k, cm/s (10^{-6} 10^{-5} 10^{-4} 10^{-3}) / WATER CONTENT PERCENT (Wp ⊢—○ W —⊣ Wl) (20 40 60 80)	ADDITIONAL LAB. TESTING	PIEZOMETER OR STANDPIPE INSTALLATION
		GROUND SURFACE		91.68							
0	Power Auger, 200 mm Diam. (Hollow Stem)	TOPSOIL - (SM) SILTY SAND; dark brown; moist		0.00 / 0.08							
		(CL/CI/CH) SILTY CLAY to CLAY; grey brown (WEATHERED CRUST); cohesive, w>PL, very stiff to stiff									
1					1	SS	4				
					2	SS	1				
2											
		(CI/CH) SILTY CLAY to CLAY; grey with black organic mottling; cohesive, w>PL, firm		88.94 / 2.74							
3					3	TP	PH				
4											
					4	SS	WH				
5											
6											
					5	SS	WH				
7											
		End of Borehole		84.06 / 7.62							
8											
9											
10											

DEPTH SCALE

1 : 50

Golder Associates

LOGGED: DG

CHECKED: SD

MIS-BHS 001 1771847.GPJ GAL-MIS.GDT 09/12/17 JEM

PROJECT: 1771847

RECORD OF BOREHOLE: 17-14

SHEET 1 OF 1

LOCATION: N 5013544.1 ;E 363225.4

BORING DATE: February 14, 2017

DATUM: CGVD28

SAMPLER HAMMER, 64kg; DROP, 760mm

PENETRATION TEST HAMMER, 64kg; DROP, 760mm

DEPTH SCALE METRES	BORING METHOD	SOIL PROFILE: DESCRIPTION	STRATA PLOT	ELEV. / DEPTH (m)	SAMPLES: NUMBER	TYPE	BLOWS/0.30m	DYNAMIC PENETRATION RESISTANCE, BLOWS/0.3m (20 40 60 80) / SHEAR STRENGTH Cu, kPa (nat V. + Q - ●; rem V. ⊕ U - ○) (20 40 60 80)	HYDRAULIC CONDUCTIVITY, k, cm/s (10^{-6} 10^{-5} 10^{-4} 10^{-3}) / WATER CONTENT PERCENT (Wp ⊖W WI; 20 40 60 80)	ADDITIONAL LAB. TESTING	PIEZOMETER OR STANDPIPE INSTALLATION
		GROUND SURFACE		91.27							
0	Power Auger, 200 mm Diam. (Hollow Stem)	TOPSOIL - (SM) SILTY SAND; dark brown; moist		0.00							
		(CL/CI/CH) SILTY CLAY to CLAY; grey brown (WEATHERED CRUST); cohesive, w>PL, very stiff to stiff		0.16							
1					1	SS	4				
2					2	SS	2				
					3	SS	1				
		(CI/CH) SILTY CLAY to CLAY; grey with black organic mottling; cohesive, w>PL, firm		88.37 / 2.90							
3					4	SS	WH				
4								⊕ +			
5					5	SS	WH				
6								⊕ +			
					6	SS	WH				
7								⊕ +			
		End of Borehole		83.65 / 7.62							
8											
9											
10											

DEPTH SCALE

1 : 50

Golder Associates

LOGGED: DG

CHECKED: SD

MIS-BHS 001 1771847.GPJ GAL-MIS.GDT 09/12/17 JEM

PROJECT: 1771847

RECORD OF BOREHOLE: 17-39

SHEET 1 OF 1

LOCATION: N 5013209.6 ;E 362401.9

BORING DATE: March 23, 2017

DATUM: CGVD28

SAMPLER HAMMER, 64kg; DROP, 760mm

PENETRATION TEST HAMMER, 64kg; DROP, 760mm

DEPTH SCALE METRES	BORING METHOD	SOIL PROFILE DESCRIPTION	STRATA PLOT	ELEV. DEPTH (m)	SAMPLES NUMBER	TYPE	BLOWS/0.30m	DYNAMIC PENETRATION RESISTANCE, BLOWS/0.3m (20 40 60 80) / SHEAR STRENGTH Cu, kPa (nat V. + Q - ●; rem V. ⊕ U - ○) (20 40 60 80)	HYDRAULIC CONDUCTIVITY, k, cm/s (10^{-6} 10^{-5} 10^{-4} 10^{-3}) / WATER CONTENT PERCENT (Wp ⊢—○W—⊣ Wl) (20 40 60 80)	ADDITIONAL LAB. TESTING	PIEZOMETER OR STANDPIPE INSTALLATION
		GROUND SURFACE		91.23							
0	Power Auger 200 mm Diam. (Hollow Stem)	TOPSOIL - (SM) SILTY SAND, trace gravel; brown; moist		0.00							
		(CL/CI/CH) SILTY CLAY to CLAY; grey brown, contains silty sand layers (WEATHERED CRUST); cohesive, w>PL, stiff		0.15	1	GRAB	-				
1					2	SS	2				
					3	SS	2				
2								⊕			
								⊕			
3				88.18							
		(CI/CH) SILTY CLAY to CLAY; grey with black organic mottling; cohesive, w>PL, firm		3.05	4	SS	WH				
4								⊕ +			
								⊕ +			
5					5	SS	WH				
								⊕ +			
								⊕ +			
6					6	SS	WH				
7								⊕ +			
								⊕ +			
				83.61				⊕ +			
		End of Borehole		7.62							
8											
9											
10											

DEPTH SCALE

1 : 50

Golder Associates

LOGGED: SN

CHECKED: SD

MIS-BHS 001 1771847.GPJ GAL-MIS.GDT 09/12/17 JEM

PROJECT: 1771847

RECORD OF BOREHOLE: 17-40

SHEET 1 OF 1

LOCATION: N 5013015.1 ;E 362511.5

BORING DATE: March 24, 2017

DATUM: CGVD28

SAMPLER HAMMER, 64kg; DROP, 760mm

PENETRATION TEST HAMMER, 64kg; DROP, 760mm

DEPTH SCALE METRES	BORING METHOD	SOIL PROFILE: DESCRIPTION	STRATA PLOT	ELEV. / DEPTH (m)	SAMPLES: NUMBER	TYPE	BLOWS/0.30m	DYNAMIC PENETRATION RESISTANCE, BLOWS/0.3m (20 40 60 80) / SHEAR STRENGTH Cu, kPa (nat V. + Q - ●; rem V. ⊕ U - ○) (20 40 60 80)	HYDRAULIC CONDUCTIVITY, k, cm/s (10^{-6} 10^{-5} 10^{-4} 10^{-3}) / WATER CONTENT PERCENT (Wp ⊖W WI; 20 40 60 80)	ADDITIONAL LAB. TESTING	PIEZOMETER OR STANDPIPE INSTALLATION
		GROUND SURFACE		91.27							
0	Power Auger, 200 mm Diam. (Hollow Stem)	TOPSOIL - (SM) SILTY SAND; brown; moist		0.00							
		(CL/CI/CH) SILTY CLAY to CLAY; grey brown, contains sand layers and possible cobbles or boulders (WEATHERED CRUST); cohesive, w>PL, stiff		0.15	1	GRAB	-				
1					2	SS	2				
		- augers grinding from 1.5 to 2.1 m depth			3A	SS	>50				
2					3B	SS	2				
		(CI/CH) SILTY CLAY to CLAY; grey with black organic mottling; cohesive, w>PL, soft to firm		88.37 / 2.90	4	SS	WH				
4								⊕ +			
								⊕ +			
					5	SS	WH				
5											
								⊕ +			
								⊕ +			
6											
					6	SS	WH				
7								⊕ +			
								⊕ +			
		End of Borehole		83.65 / 7.62				⊕ +			
8											
9											
10											

DEPTH SCALE

1 : 50

Golder Associates

LOGGED: SN

CHECKED: SD

MIS-BHS 001 1771847.GPJ GAL-MIS.GDT 09/12/17 JEM

PROJECT: 1771847

RECORD OF BOREHOLE: 17-41

SHEET 1 OF 1

LOCATION: N 5013282.6 ;E 362535.2

BORING DATE: March 23, 2017

DATUM: CGVD28

SAMPLER HAMMER, 64kg; DROP, 760mm

PENETRATION TEST HAMMER, 64kg; DROP, 760mm

DEPTH SCALE METRES	BORING METHOD	SOIL PROFILE: DESCRIPTION	STRATA PLOT	ELEV. / DEPTH (m)	SAMPLES: NUMBER	TYPE	BLOWS/0.30m	DYNAMIC PENETRATION RESISTANCE, BLOWS/0.3m (20 40 60 80) / SHEAR STRENGTH Cu, kPa (nat V. + Q - ●; rem V. ⊕ U - ○) (20 40 60 80)	HYDRAULIC CONDUCTIVITY, k, cm/s (10^{-6} 10^{-5} 10^{-4} 10^{-3}) / WATER CONTENT PERCENT (Wp — W — Wl; 20 40 60 80)	ADDITIONAL LAB. TESTING	PIEZOMETER OR STANDPIPE INSTALLATION
		GROUND SURFACE		91.51							
0	Power Auger, 200 mm Diam. (Hollow Stem)	TOPSOIL - (SM) SILTY SAND; brown; moist		0.00							
		(CL/CI/CH) SILTY CLAY to CLAY; grey brown, contains sandy silt layers (WEATHERED CRUST); cohesive, w>PL, very stiff to stiff		0.13	1	GRAB	-				
1					2	SS	2				
					3	SS	2				
2								⊕ ⊕	+ +		
3		(CI/CH) SILTY CLAY to CLAY; grey with black organic mottling, contains sand seams; cohesive, w>PL, firm		88.46 / 3.05	4	SS	WH				
4								⊕ ⊕	+ +		
5					5	SS	WH				
								⊕ ⊕	+ +		
6					6	SS	WH				
7								⊕ ⊕	+ +		
		End of Borehole		83.89 / 7.62				⊕	+		
8											
9											
10											

DEPTH SCALE

1 : 50

Golder Associates

LOGGED: SN

CHECKED: SD

PROJECT: 1771847

RECORD OF BOREHOLE: 17-42

SHEET 1 OF 1

LOCATION: N 5013169.5 ;E 362589.9

BORING DATE: March 30, 2017

DATUM: CGVD28

SAMPLER HAMMER, 64kg; DROP, 760mm

PENETRATION TEST HAMMER, 64kg; DROP, 760mm

DEPTH SCALE METRES	BORING METHOD	SOIL PROFILE DESCRIPTION	STRATA PLOT	ELEV. / DEPTH (m)	SAMPLES NUMBER	TYPE	BLOWS/0.30m	DYNAMIC PENETRATION RESISTANCE, BLOWS/0.3m (20 40 60 80) / SHEAR STRENGTH Cu, kPa (nat V. + Q - ●; rem V. ⊕ U - ○) (20 40 60 80)	HYDRAULIC CONDUCTIVITY, k, cm/s (10^{-6} 10^{-5} 10^{-4} 10^{-3}) / WATER CONTENT PERCENT (Wp ⊖W Wl; 20 40 60 80)	ADDITIONAL LAB. TESTING	PIEZOMETER OR STANDPIPE INSTALLATION
		GROUND SURFACE		91.16							
0	Power Auger, 200 mm Diam. (Hollow Stem)	TOPSOIL - (SM) SILTY SAND; brown; moist		0.00							
		(CL/CI/CH) SILTY CLAY to CLAY; grey brown, contains silty sand layers (WEATHERED CRUST); cohesive, w>PL, stiff to firm		0.15	1	GRAB	-				Bentonite Seal
1					2	SS	1				
					3	SS	1				
2											
		(CI/CH) SILTY CLAY to CLAY; grey with black organic mottling, contains sand seams; cohesive, w>PL, soft to firm		88.42 / 2.74							
3					4	SS	WH				Cuttings
4											
5					5	SS	WH				
6					6	SS	WH				Bentonite Seal
7											Standpipe
8					7	TP	PH				Cuttings
9		End of Borehole		82.02 / 9.14							W.L. in Standpipe at Elev. 90.94 m on April 13, 2017
10											

DEPTH SCALE

1 : 50

Golder Associates

LOGGED: SN

CHECKED: SD

MIS-BHS 001 1771847.GPJ GAL-MIS.GDT 09/12/17 JEM

PROJECT: 1771847

RECORD OF BOREHOLE: 17-43

SHEET 1 OF 1

LOCATION: N 5013089.3 ;E 362640.6

BORING DATE: March 20, 2017

DATUM: CGVD28

SAMPLER HAMMER, 64kg; DROP, 760mm

PENETRATION TEST HAMMER, 64kg; DROP, 760mm

DEPTH SCALE METRES	BORING METHOD	SOIL PROFILE: DESCRIPTION	STRATA PLOT	ELEV. / DEPTH (m)	SAMPLES: NUMBER	TYPE	BLOWS/0.30m	DYNAMIC PENETRATION RESISTANCE, BLOWS/0.3m (20 40 60 80) / SHEAR STRENGTH Cu, kPa (nat V. + Q - ●; rem V. ⊕ U - ○) (20 40 60 80)	HYDRAULIC CONDUCTIVITY, k, cm/s (10^{-6} 10^{-5} 10^{-4} 10^{-3}) / WATER CONTENT PERCENT (Wp ⊖W Wl; 20 40 60 80)	ADDITIONAL LAB. TESTING	PIEZOMETER OR STANDPIPE INSTALLATION
		GROUND SURFACE		91.52							
0	Power Auger, 200 mm Diam. (Hollow Stem)	TOPSOIL - (SM) SILTY SAND; dark brown; moist		0.00							
		(CL/CI/CH) SILTY CLAY to CLAY; grey brown, contains silty sand layers (WEATHERED CRUST); cohesive, w>PL, very stiff to stiff		0.15							
1					1	SS	2				
					2	SS	2				
2											
								⊕ +			
								⊕ +			
3				88.47							
		(CI/CH) SILTY CLAY to CLAY; grey with black organic mottling, contains sand seams; cohesive, w>PL, soft to firm		3.05	3	SS	WH				
4								⊕ +			
								⊕ +			
					4	SS	WH				
5											
								⊕ +			
								⊕ +			
6											
					5	SS	WH				
7								⊕ +			
								⊕ +			
				83.90							
		End of Borehole		7.62				⊕ +			
8											
9											
10											

DEPTH SCALE

1 : 50

Golder Associates

LOGGED: SN

CHECKED: SD

MIS-BHS 001 1771847.GPJ GAL-MIS.GDT 09/12/17 JEM

PROJECT: 1771847

RECORD OF BOREHOLE: 17-43A

SHEET 1 OF 1

LOCATION: Adjacent to BH 17-43

BORING DATE: March 20, 2017

DATUM: CGVD28

SAMPLER HAMMER, 64kg; DROP, 760mm

PENETRATION TEST HAMMER, 64kg; DROP, 760mm

DEPTH SCALE METRES	BORING METHOD	SOIL PROFILE: DESCRIPTION	STRATA PLOT	ELEV. / DEPTH (m)	SAMPLES: NUMBER	TYPE	BLOWS/0.30m	DYNAMIC PENETRATION RESISTANCE, BLOWS/0.3m (20 40 60 80) / SHEAR STRENGTH Cu, kPa (nat V. + Q - ●, rem V. ⊕ U - ○) (20 40 60 80)	HYDRAULIC CONDUCTIVITY, k, cm/s (10^{-6} 10^{-5} 10^{-4} 10^{-3}) / WATER CONTENT PERCENT (Wp ⊖W WI) (20 40 60 80)	ADDITIONAL LAB. TESTING	PIEZOMETER OR STANDPIPE INSTALLATION
		GROUND SURFACE		91.52							
0	Power Auger, 200 mm Diam. (Hollow Stem)	Refer to Borehole 17-43 for Stratigraphy		0.00							Bentonite Seal
1											Silica Sand
2											51 mm Diam. PVC #10 Slot Screen
3				88.47							Silica Sand
		End of Borehole		3.05							WL in Screen at Elev. 91.60 m on March 31, 2017
4											
5											
6											
7											
8											
9											
10											

DEPTH SCALE

1 : 50

Golder Associates

LOGGED: SN

CHECKED: SD

PROJECT: 1771847

RECORD OF BOREHOLE: 17-44

SHEET 1 OF 1

LOCATION: N 5013362.7 ;E 362667.1

BORING DATE: March 30, 2017

DATUM: CGVD28

SAMPLER HAMMER, 64kg; DROP, 760mm

PENETRATION TEST HAMMER, 64kg; DROP, 760mm

DEPTH SCALE METRES	BORING METHOD	SOIL PROFILE: DESCRIPTION	STRATA PLOT	ELEV. / DEPTH (m)	SAMPLES: NUMBER	TYPE	BLOWS/0.30m	DYNAMIC PENETRATION RESISTANCE, BLOWS/0.3m (20 40 60 80) / SHEAR STRENGTH Cu, kPa (nat V. + Q - ●; rem V. ⊕ U - ○) (20 40 60 80)	HYDRAULIC CONDUCTIVITY, k, cm/s (10^{-6} 10^{-5} 10^{-4} 10^{-3}) / WATER CONTENT PERCENT (Wp ⊢—○ W —⊣ Wl) (20 40 60 80)	ADDITIONAL LAB. TESTING	PIEZOMETER OR STANDPIPE INSTALLATION
		GROUND SURFACE		91.54							
0	Power Auger, 200 mm Diam. (Hollow Stem)	TOPSOIL - (SM) SILTY SAND; brown; moist		0.00							
		(CL/CI/CH) SILTY CLAY to CLAY; grey brown, contains silty sand layers (WEATHERED CRUST); cohesive, w>PL, very stiff to stiff		0.15	1	GRAB	-				
1					2	SS	2				
					3	SS	2				
2								⊕ +			
								⊕ +			
3		(CI/CH) SILTY CLAY to CLAY; grey with black organic mottling, contains sand seams; cohesive, w>PL, firm		88.49 / 3.05	4	SS	WH				
4								⊕ +			
								⊕ +			
5					5	SS	WH				
								⊕ +			
6								⊕ +			
					6	SS	WH				
7								⊕ +			
								⊕ +			
		End of Borehole		83.92 / 7.62				⊕ +			
8											
9											
10											

DEPTH SCALE

1 : 50

Golder Associates

LOGGED: SN

CHECKED: SD

PROJECT: 1771847

RECORD OF BOREHOLE: 17-45

SHEET 1 OF 1

LOCATION: N 5013163.8 ;E 362766.6

BORING DATE: March 24, 2017

DATUM: CGVD28

SAMPLER HAMMER, 64kg; DROP, 760mm

PENETRATION TEST HAMMER, 64kg; DROP, 760mm

DEPTH SCALE METRES	BORING METHOD	SOIL PROFILE: DESCRIPTION	STRATA PLOT	ELEV. / DEPTH (m)	SAMPLES: NUMBER	TYPE	BLOWS/0.30m	DYNAMIC PENETRATION RESISTANCE, BLOWS/0.3m (20 40 60 80) / SHEAR STRENGTH Cu, kPa (nat V. + Q - ●; rem V. ⊕ U - ○) (20 40 60 80)	HYDRAULIC CONDUCTIVITY, k, cm/s (10^{-6} 10^{-5} 10^{-4} 10^{-3}) / WATER CONTENT PERCENT (Wp ⊢—○ W —⊣ Wl) (20 40 60 80)	ADDITIONAL LAB. TESTING	PIEZOMETER OR STANDPIPE INSTALLATION
		GROUND SURFACE		91.60							
0	Power Auger, 200 mm Diam. (Hollow Stem)	TOPSOIL - (SM) SILTY SAND, trace gravel; dark brown; moist		0.00							
		(CL/CI/CH) SILTY CLAY to CLAY; grey brown, contains sand layers (WEATHERED CRUST); cohesive, w>PL, very stiff to stiff		91.38 / 0.22	1	GRAB	-				
1					2	SS	3				
					3	SS	2				
2								⊕ +			
								⊕ +			
3		(CI/CH) SILTY CLAY to CLAY; grey with black organic mottling; cohesive, w>PL, soft to firm		88.55 / 3.05	4	SS	WH				
4								⊕ +			
								⊕ +			
5					5	SS	WH				
								⊕ +			
								⊕ +			
6					6	SS	WH				
7								⊕ +			
								⊕ +			
		End of Borehole		83.98 / 7.62				⊕ +			
8											
9											
10											

DEPTH SCALE
1 : 50

Golder Associates

LOGGED: SN
CHECKED: SD

MIS-BHS 001 1771847.GPJ GAL-MIS.GDT 09/12/17 JEM

PROJECT: 1771847

RECORD OF BOREHOLE: 17-46

SHEET 1 OF 1

LOCATION: N 5013430.6 ;E 362784.4

BORING DATE: March 20, 2017

DATUM: CGVD28

SAMPLER HAMMER, 64kg; DROP, 760mm

PENETRATION TEST HAMMER, 64kg; DROP, 760mm

DEPTH SCALE METRES	BORING METHOD	SOIL PROFILE: DESCRIPTION	STRATA PLOT	ELEV. / DEPTH (m)	SAMPLES: NUMBER	TYPE	BLOWS/0.30m	DYNAMIC PENETRATION RESISTANCE, BLOWS/0.3m (20 40 60 80) / SHEAR STRENGTH Cu, kPa (nat V. + Q - ●; rem V. ⊕ U - ○) (20 40 60 80)	HYDRAULIC CONDUCTIVITY, k, cm/s (10^{-6} 10^{-5} 10^{-4} 10^{-3}) / WATER CONTENT PERCENT (Wp ⊢—○W—⊣ Wl) (20 40 60 80)	ADDITIONAL LAB. TESTING	PIEZOMETER OR STANDPIPE INSTALLATION
		GROUND SURFACE		91.63							
0	Power Auger, 200 mm Diam. (Hollow Stem)	TOPSOIL - (SM) SILTY SAND; brown; moist		0.00							
		(CL/CI/CH) SILTY CLAY to CLAY; grey brown, contains sand layers (WEATHERED CRUST); cohesive, w>PL, very stiff to stiff		0.15	1	GRAB	-				
1					2	SS	4				
					3	SS	2				
2											
3				88.58							
		(CI/CH) SILTY CLAY to CLAY; grey with black organic mottling, contains sand seams; cohesive, w>PL, firm		3.05	4	SS	WH				
4											
5					5	SS	WH				
6					6	SS	WH				
7				84.01							
		End of Borehole		7.62							
8											
9											
10											

DEPTH SCALE

1 : 50

Golder Associates

LOGGED: SN

CHECKED: SD

MIS-BHS 001 1771847.GPJ GAL-MIS.GDT 09/12/17 JEM

PROJECT: 1771847

RECORD OF BOREHOLE: 17-46A

SHEET 1 OF 1

LOCATION: Adjacent to BH 17-46

BORING DATE: March 20, 2017

DATUM: CGVD28

SAMPLER HAMMER, 64kg; DROP, 760mm

PENETRATION TEST HAMMER, 64kg; DROP, 760mm

DEPTH SCALE METRES	BORING METHOD	SOIL PROFILE: DESCRIPTION	STRATA PLOT	ELEV. / DEPTH (m)	SAMPLES: NUMBER	TYPE	BLOWS/0.30m	DYNAMIC PENETRATION RESISTANCE, BLOWS/0.3m (20 40 60 80) / SHEAR STRENGTH Cu, kPa (nat V. + Q - ●, rem V. ⊕ U - ○) (20 40 60 80)	HYDRAULIC CONDUCTIVITY, k, cm/s (10^{-6} 10^{-5} 10^{-4} 10^{-3}) / WATER CONTENT PERCENT (Wp ⊖W WI) (20 40 60 80)	ADDITIONAL LAB. TESTING	PIEZOMETER OR STANDPIPE INSTALLATION
		GROUND SURFACE		91.63							
0	Power Auger, 200 mm Diam. (Hollow Stem)	Refer to Borehole 17-46 for Stratigraphy		0.00							Bentonite Seal
1											Silica Sand
2											51 mm Diam. PVC #10 Slot Screen
3				88.58							Silica Sand
		End of Borehole		3.05							WL in Screen at Elev. 91.36 m on March 31, 2017
4											
5											
6											
7											
8											
9											
10											

DEPTH SCALE

1 : 50

Golder Associates

LOGGED: SN

CHECKED: SD

PROJECT: 1771847

RECORD OF BOREHOLE: 17-47

SHEET 1 OF 1

LOCATION: N 5013313.3 ;E 362843.7

BORING DATE: March 30, 2017

DATUM: CGVD28

SAMPLER HAMMER, 64kg; DROP, 760mm

PENETRATION TEST HAMMER, 64kg; DROP, 760mm

DEPTH SCALE METRES	BORING METHOD	SOIL PROFILE: DESCRIPTION	STRATA PLOT	ELEV. / DEPTH (m)	SAMPLES: NUMBER	TYPE	BLOWS/0.30m	DYNAMIC PENETRATION RESISTANCE, BLOWS/0.3m (20 40 60 80) / SHEAR STRENGTH Cu, kPa (nat V. + Q - ●; rem V. ⊕ U - ○) (20 40 60 80)	HYDRAULIC CONDUCTIVITY, k, cm/s (10^{-6} 10^{-5} 10^{-4} 10^{-3}) / WATER CONTENT PERCENT (Wp ⊢—○W—⊣ Wl) (20 40 60 80)	ADDITIONAL LAB. TESTING	PIEZOMETER OR STANDPIPE INSTALLATION
		GROUND SURFACE		91.53							
0	Power Auger, 200 mm Diam. (Hollow Stem)	TOPSOIL - (SM) SILTY SAND; brown; moist		0.00							
		(CL/CI/CH) SILTY CLAY to CLAY; grey brown, contains silty sand layers (WEATHERED CRUST); cohesive, w>PL, stiff		0.15	1	GRAB	-				
1					2	SS	2				
					3	SS	WH				
2				89.09							
		(CI/CH) SILTY CLAY to CLAY; grey with black organic mottling, contains silty sand seams; cohesive, w>PL, soft to firm		2.44							
3					4	SS	WH				
4											
5					5	SS	WH				
6					6	SS	WH				
7				83.91							
		End of Borehole		7.62							
8											
9											
10											

DEPTH SCALE

1 : 50

Golder Associates

LOGGED: SN

CHECKED: SD

MIS-BHS 001 1771847.GPJ GAL-MIS.GDT 09/12/17 JEM

PROJECT: 1771847

RECORD OF BOREHOLE: 17-48

SHEET 1 OF 1

LOCATION: N 5013231.8 ;E 362893.8

BORING DATE: March 24, 2017

DATUM: CGVD28

SAMPLER HAMMER, 64kg; DROP, 760mm

PENETRATION TEST HAMMER, 64kg; DROP, 760mm

DEPTH SCALE METRES	BORING METHOD	SOIL PROFILE: DESCRIPTION	STRATA PLOT	ELEV. / DEPTH (m)	SAMPLES: NUMBER	TYPE	BLOWS/0.30m	ADDITIONAL LAB. TESTING
		GROUND SURFACE		91.54				
0	Power Auger, 200 mm Diam. (Hollow Stem)	TOPSOIL - (SM) SILTY SAND, trace gravel; brown; moist		0.00				
		(CL/CI/CH) SILTY CLAY to CLAY; grey brown, contains silty sand layers (WEATHERED CRUST); cohesive, w>PL, very stiff to stiff		91.32 / 0.22	1	GRAB	-	
1					2	SS	5	
					3	SS	2	
2								
3		(CI/CH) SILTY CLAY to CLAY; grey with black organic mottling; cohesive, w>PL, soft to firm		88.49 / 3.05	4	SS	WH	
4								
					5	TP	PH	C
5								
6					6	SS	WH	
7				83.92				
		End of Borehole		7.62				
8								
9								
10								

DYNAMIC PENETRATION RESISTANCE, BLOWS/0.3m: 20, 40, 60, 80

SHEAR STRENGTH Cu, kPa: nat V. + Q - ●; rem V. ⊕ U - ○; 20, 40, 60, 80

HYDRAULIC CONDUCTIVITY, k, cm/s: 10^{-6}, 10^{-5}, 10^{-4}, 10^{-3}

WATER CONTENT PERCENT: Wp ⊢—○—⊣ Wl; W; 20, 40, 60, 80

PIEZOMETER OR STANDPIPE INSTALLATION

DEPTH SCALE

1 : 50

Golder Associates

LOGGED: SN

CHECKED: SD

MIS-BHS 001 1771847.GPJ GAL-MIS.GDT 09/12/17 JEM

PROJECT: 1771847

RECORD OF BOREHOLE: 17-49

SHEET 1 OF 1

LOCATION: N 5013509.6 ;E 362910.4

BORING DATE: March 29, 2017

DATUM: CGVD28

SAMPLER HAMMER, 64kg; DROP, 760mm

PENETRATION TEST HAMMER, 64kg; DROP, 760mm

DEPTH SCALE METRES	BORING METHOD	SOIL PROFILE: DESCRIPTION	STRATA PLOT	ELEV. / DEPTH (m)	SAMPLES: NUMBER	TYPE	BLOWS/0.30m	DYNAMIC PENETRATION RESISTANCE, BLOWS/0.3m (20 40 60 80) / SHEAR STRENGTH Cu, kPa (nat V. + Q - ●; rem V. ⊕ U - ○) (20 40 60 80)	HYDRAULIC CONDUCTIVITY, k, cm/s (10^{-6} 10^{-5} 10^{-4} 10^{-3}) / WATER CONTENT PERCENT (Wp ⊢—○W—⊣ Wl) (20 40 60 80)	ADDITIONAL LAB. TESTING	PIEZOMETER OR STANDPIPE INSTALLATION
		GROUND SURFACE		91.64							
0	Power Auger, 200 mm Diam. (Hollow Stem)	TOPSOIL - (SM) SILTY SAND; brown; moist		0.00							
		(CL/CI/CH) SILTY CLAY to CLAY; grey brown, contains silty sand layers (WEATHERED CRUST); cohesive, w>PL, very stiff to stiff		0.15	1	GRAB	-				
1					2	SS	5				
					3	SS	3				
2											
3				88.59							
		(CI/CH) SILTY CLAY to CLAY; grey with black orgnanic mottling, contains silty sand seams; cohesive, w>PL, soft to firm		3.05	4	SS	WH				
4											
					5	SS	WH				
5											
6					6	TP	PH				
7											
				84.02							
		End of Borehole		7.62							
8											
9											
10											

DEPTH SCALE

1 : 50

Golder Associates

LOGGED: SN

CHECKED: SD

PROJECT: 1771847

RECORD OF BOREHOLE: 17-50

SHEET 1 OF 1

LOCATION: N 5013302.0 ;E 363015.6

BORING DATE: March 27, 2017

DATUM: CGVD28

SAMPLER HAMMER, 64kg; DROP, 760mm

PENETRATION TEST HAMMER, 64kg; DROP, 760mm

DEPTH SCALE METRES	BORING METHOD	SOIL PROFILE: DESCRIPTION	STRATA PLOT	ELEV. / DEPTH (m)	SAMPLES: NUMBER	TYPE	BLOWS/0.30m	DYNAMIC PENETRATION RESISTANCE, BLOWS/0.3m (20 40 60 80) / SHEAR STRENGTH Cu, kPa (nat V. + Q - ●; rem V. ⊕ U - ○) (20 40 60 80)	HYDRAULIC CONDUCTIVITY, k, cm/s (10^{-6} 10^{-5} 10^{-4} 10^{-3}) / WATER CONTENT PERCENT (Wp ⊢—○W—⊣ Wl) (20 40 60 80)	ADDITIONAL LAB. TESTING	PIEZOMETER OR STANDPIPE INSTALLATION
		GROUND SURFACE		91.44							
0	Power Auger, 200 mm Diam. (Hollow Stem)	TOPSOIL - (SM) SILTY SAND, trace gravel; brown; moist		0.00							
		(CL/CI/CH) SILTY CLAY to CLAY; grey brown, contains silty sand layers (WEATHERED CRUST); cohesive, w>PL, very stiff to stiff		0.15	1	GRAB	-				
1					2	SS	5				
					3	SS	1				
2								⊕ +			
								⊕ +			
3		(CI/CH) SILTY CLAY to CLAY; grey with black organic mottling; cohesive, w>PL, soft to firm		88.39 / 3.05	4	SS	WH				
4								⊕ +			
								⊕ +			
5					5	SS	WH				
								⊕ +			
								⊕ +			
6					6	SS	WH				
7								⊕ +			
								+			
		End of Borehole		83.82 / 7.62				+			
8											
9											
10											

DEPTH SCALE

1 : 50

Golder Associates

LOGGED: SN

CHECKED: SD

MIS-BHS 001 1771847.GPJ GAL-MIS.GDT 09/12/17 JEM

PROJECT: 1771847

RECORD OF BOREHOLE: 17-51

SHEET 1 OF 1

LOCATION: N 5013578.8 ;E 363036.0

BORING DATE: March 28, 2017

DATUM: CGVD28

SAMPLER HAMMER, 64kg; DROP, 760mm

PENETRATION TEST HAMMER, 64kg; DROP, 760mm

DEPTH SCALE METRES	BORING METHOD	SOIL PROFILE: DESCRIPTION	STRATA PLOT	ELEV. / DEPTH (m)	SAMPLES: NUMBER	TYPE	BLOWS/0.30m	DYNAMIC PENETRATION RESISTANCE, BLOWS/0.3m (20 40 60 80) / SHEAR STRENGTH Cu, kPa (nat V. + Q - ●; rem V. ⊕ U - ○) (20 40 60 80)	HYDRAULIC CONDUCTIVITY, k, cm/s (10^{-6} 10^{-5} 10^{-4} 10^{-3}) / WATER CONTENT PERCENT (Wp ⊢—○W—⊣ Wl) (20 40 60 80)	ADDITIONAL LAB. TESTING	PIEZOMETER OR STANDPIPE INSTALLATION
		GROUND SURFACE		91.43							
0	Power Auger, 200 mm Diam. (Hollow Stem)	TOPSOIL - (SM) SILTY SAND; brown; moist		0.00							
		(CL/CI/CH) SILTY CLAY to CLAY; grey brown, contains silty sand layers (WEATHERED CRUST); cohesive, w>PL, very stiff to stiff		0.15	1	GRAB	-				
1					2	SS	5				
					3	SS	3				
2											
3				88.38							
		(CI/CH) SILTY CLAY to CLAY; grey with black organic mottling; cohesive, w>PL, firm		3.05	4	SS	WH				
4											
					5	SS	WH				
5											
6					6	SS	WH				
7				83.81							
		End of Borehole		7.62							
8											
9											
10											

DEPTH SCALE

1 : 50

Golder Associates

LOGGED: SN

CHECKED: SD

MIS-BHS 001 1771847.GPJ GAL-MIS.GDT 09/12/17 JEM

PROJECT: 1771847

RECORD OF BOREHOLE: 17-52

SHEET 1 OF 1

LOCATION: N 5013458.3 ;E 363093.2

BORING DATE: March 20, 2017

DATUM: CGVD28

SAMPLER HAMMER, 64kg; DROP, 760mm

PENETRATION TEST HAMMER, 64kg; DROP, 760mm

DEPTH SCALE METRES	BORING METHOD	SOIL PROFILE: DESCRIPTION	STRATA PLOT	ELEV. / DEPTH (m)	SAMPLES: NUMBER	TYPE	BLOWS/0.30m	DYNAMIC PENETRATION RESISTANCE, BLOWS/0.3m (20 40 60 80) / SHEAR STRENGTH Cu, kPa (nat V. + Q - ●; rem V. ⊕ U - ○) (20 40 60 80)	HYDRAULIC CONDUCTIVITY, k, cm/s (10^{-6} 10^{-5} 10^{-4} 10^{-3}) / WATER CONTENT PERCENT (Wp ⊢—○W—⊣ Wl) (20 40 60 80)	ADDITIONAL LAB. TESTING	PIEZOMETER OR STANDPIPE INSTALLATION
		GROUND SURFACE		91.43							
0	Power Auger, 200 mm Diam. (Hollow Stem)	TOPSOIL - (SM/ML) SILTY SAND to sandy SILT, trace gravel; brown; moist		0.00							
		(CL/CI/CH) SILTY CLAY to CLAY; grey brown, contains silty sand layers (WEATHERED CRUST); cohesive, w>PL, very stiff to firm		91.13 / 0.30	1	GRAB	-				
1					2	SS	5				
					3	SS	2				
2								⊕ +			
								⊕ +			
3		(CI/CH) SILTY CLAY to CLAY; grey with black organic mottling, contains silty sand seams; cohesive, w>PL, soft to firm		88.38 / 3.05	4	SS	WH				
4								⊕ +			
								⊕ +			
5					5	SS	WH				
								⊕ +			
6								⊕ +			
					6	SS	WH				
7								⊕ +			
								⊕ +			
		End of Borehole		83.81 / 7.62				⊕ +			
8											
9											
10											

DEPTH SCALE

1 : 50

Golder Associates

LOGGED: SN

CHECKED: SD

PROJECT: 1771847

RECORD OF BOREHOLE: 17-52A

SHEET 1 OF 1

LOCATION: Adjacent to BH 17-52

BORING DATE: March 20, 2017

DATUM: CGVD28

SAMPLER HAMMER, 64kg; DROP, 760mm

PENETRATION TEST HAMMER, 64kg; DROP, 760mm

DEPTH SCALE METRES	BORING METHOD	SOIL PROFILE: DESCRIPTION	STRATA PLOT	ELEV. / DEPTH (m)	SAMPLES: NUMBER	TYPE	BLOWS/0.30m	DYNAMIC PENETRATION RESISTANCE, BLOWS/0.3m (20 40 60 80) / SHEAR STRENGTH Cu, kPa (nat V. + Q - ●, rem V. ⊕ U - ○) (20 40 60 80)	HYDRAULIC CONDUCTIVITY, k, cm/s (10^{-6} 10^{-5} 10^{-4} 10^{-3}) / WATER CONTENT PERCENT (Wp ⊖W WI) (20 40 60 80)	ADDITIONAL LAB. TESTING	PIEZOMETER OR STANDPIPE INSTALLATION
		GROUND SURFACE		91.43							
0	Power Auger, 200 mm Diam. (Hollow Stem)	Refer to Borehole 17-52 for Stratigraphy		0.00							Bentonite Seal
1											Silica Sand
2											51 mm Diam. PVC #10 Slot Screen
3				88.38							Silica Sand
		End of Borehole		3.05							WL in Screen at Elev. 91.46 m on March 31, 2017
4											
5											
6											
7											
8											
9											
10											

DEPTH SCALE

1 : 50

Golder Associates

LOGGED: SN

CHECKED: SD

PROJECT: 1771847

RECORD OF BOREHOLE: 17-53

SHEET 1 OF 1

LOCATION: N 5013382.6 ;E 363144.5

BORING DATE: March 29, 2017

DATUM: CGVD28

SAMPLER HAMMER, 64kg; DROP, 760mm

PENETRATION TEST HAMMER, 64kg; DROP, 760mm

DEPTH SCALE METRES	BORING METHOD	SOIL PROFILE DESCRIPTION	STRATA PLOT	ELEV. / DEPTH (m)	SAMPLES NUMBER	TYPE	BLOWS/0.30m	DYNAMIC PENETRATION RESISTANCE, BLOWS/0.3m (20 40 60 80) / SHEAR STRENGTH Cu, kPa (nat V. + Q - ●; rem V. ⊕ U - ○) (20 40 60 80)	HYDRAULIC CONDUCTIVITY, k, cm/s (10^{-6} 10^{-5} 10^{-4} 10^{-3}) / WATER CONTENT PERCENT (Wp ⊖W Wl; 20 40 60 80)	ADDITIONAL LAB. TESTING	PIEZOMETER OR STANDPIPE INSTALLATION
		GROUND SURFACE		91.51							
0	Power Auger 200 mm Diam. (Hollow Stem)	TOPSOIL - (SM) SILTY SAND; brown; moist		0.00	1	GRAB	-				
		(CL/CI/CH) SILTY CLAY to CLAY; grey brown, contains silty sand seams (WEATHERED CRUST); cohesive, w>PL, very stiff to stiff		0.15							
1					2	SS	4				
					3	SS	2				
2											
3				88.46							
		(CI/CH) SILTY CLAY to CLAY; grey with black organic mottling, contains silty sand seams; cohesive, w>PL, firm		3.05	4	SS	WH				
4											
5					5	SS	WH				
6					6	SS	WH				
7				83.89							
		End of Borehole		7.62							
8											
9											
10											

DEPTH SCALE

1 : 50

Golder Associates

LOGGED: SN

CHECKED: SD

MIS-BHS 001 1771847.GPJ GAL-MIS.GDT 09/12/17 JEM

PROJECT: 1771847

RECORD OF BOREHOLE: 17-55

SHEET 1 OF 1

LOCATION: N 5013455.1 ;E 363274.4

BORING DATE: March 29, 2017

DATUM: CGVD28

SAMPLER HAMMER, 64kg; DROP, 760mm

PENETRATION TEST HAMMER, 64kg; DROP, 760mm

DEPTH SCALE METRES	BORING METHOD	SOIL PROFILE: DESCRIPTION	STRATA PLOT	ELEV. / DEPTH (m)	SAMPLES: NUMBER	TYPE	BLOWS/0.30m	DYNAMIC PENETRATION RESISTANCE, BLOWS/0.3m (20 40 60 80) / SHEAR STRENGTH Cu, kPa (nat V. + Q - ●; rem V. ⊕ U - ○) (20 40 60 80)	HYDRAULIC CONDUCTIVITY, k, cm/s (10^{-6} 10^{-5} 10^{-4} 10^{-3}) / WATER CONTENT PERCENT (Wp ⊖W WI) (20 40 60 80)	ADDITIONAL LAB. TESTING	PIEZOMETER OR STANDPIPE INSTALLATION
		GROUND SURFACE		91.44							
0	Power Auger, 200 mm Diam. (Hollow Stem)	TOPSOIL - (SM) SILTY SAND; brown, contains organic matter (rootlets); moist		0.00	1	GRAB	-				
		(CL/CI/CH) SILTY CLAY to CLAY; grey brown, contains silty sand layers (WEATHERED CRUST); cohesive, w>PL, very stiff		0.15							
1					2	SS	4				
					3	SS	2				
2								⊕ <96 +			
								⊕ <96 +			
3		(CI/CH) SILTY CLAY to CLAY; grey with black organic mottling, contains silty sand seams; cohesive, w>PL, firm		88.39 / 3.05	4	SS	WH				
4								⊕ +			
								⊕ +			
5					5	SS	WH				
								⊕ +			
								⊕ +			
6					6	SS	WH				
7								⊕ +			
								⊕ +			
				83.82				⊕ +			
		End of Borehole		7.62							
8											
9											
10											

DEPTH SCALE

1 : 50

Golder Associates

LOGGED: SN

CHECKED: SD

MIS-BHS 001 1771847.GPJ GAL-MIS.GDT 09/12/17 JEM

PROJECT: 1771847

RECORD OF BOREHOLE: 17-58

SHEET 1 OF 1

LOCATION: N 5013537.8 ;E 363416.5

BORING DATE: March 28, 2017

DATUM: CGVD28

SAMPLER HAMMER, 64kg; DROP, 760mm

PENETRATION TEST HAMMER, 64kg; DROP, 760mm

DEPTH SCALE METRES	BORING METHOD	SOIL PROFILE: DESCRIPTION	STRATA PLOT	ELEV. / DEPTH (m)	SAMPLES: NUMBER	TYPE	BLOWS/0.30m	DYNAMIC PENETRATION RESISTANCE, BLOWS/0.3m (20 40 60 80) / SHEAR STRENGTH Cu, kPa (nat V. + Q - ●; rem V. ⊕ U - ○) (20 40 60 80)	HYDRAULIC CONDUCTIVITY, k, cm/s (10^{-6} 10^{-5} 10^{-4} 10^{-3}) / WATER CONTENT PERCENT (Wp ⊢—○W—⊣ Wl) (20 40 60 80)	ADDITIONAL LAB. TESTING	PIEZOMETER OR STANDPIPE INSTALLATION
		GROUND SURFACE		91.37							
0	Power Auger, 200 mm Diam. (Hollow Stem)	TOPSOIL - (SM) SILTY SAND; brown; moist		0.00							
		(CL/CI/CH) SILTY CLAY to CLAY; grey brown, contains silty sand layers (WEATHERED CRUST); cohesive, w>PL, very stiff to stiff		0.15	1	GRAB	-				
1					2	SS	5				
					3	SS	4				
2											
3				88.32							
		(CI/CH) SILTY CLAY to CLAY; grey with black organic mottling; cohesive, w>PL, firm		3.05	4	SS	WH				
4											
5					5	TP	PH				
6					6	SS	WH				
7											
				83.75							
		End of Borehole		7.62							
8											
9											
10											

DEPTH SCALE

1 : 50

Golder Associates

LOGGED: SN

CHECKED: SD

MIS-BHS 001 1771847.GPJ GAL-MIS.GDT 09/12/17 JEM

PROJECT: 1771847

RECORD OF BOREHOLE: 17-60

SHEET 1 OF 1

LOCATION: N 5013618.3 ;E 363548.7

BORING DATE: March 28, 2017

DATUM: CGVD28

SAMPLER HAMMER, 64kg; DROP, 760mm

PENETRATION TEST HAMMER, 64kg; DROP, 760mm

DEPTH SCALE METRES	BORING METHOD	SOIL PROFILE – DESCRIPTION	STRATA PLOT	ELEV. / DEPTH (m)	SAMPLES – NUMBER	TYPE	BLOWS/0.30m	DYNAMIC PENETRATION RESISTANCE, BLOWS/0.3m (20 40 60 80)	SHEAR STRENGTH Cu, kPa (nat V. + Q - ●; rem V. ⊕ U - ○) (20 40 60 80)	HYDRAULIC CONDUCTIVITY, k, cm/s (10^{-6} 10^{-5} 10^{-4} 10^{-3}) / WATER CONTENT PERCENT (Wp ⊖ W Wl; 20 40 60 80)	ADDITIONAL LAB. TESTING	PIEZOMETER OR STANDPIPE INSTALLATION
		GROUND SURFACE		91.23								
0	Power Auger, 200 mm Diam. (Hollow Stem)	TOPSOIL - (SM) SILTY SAND; brown, contains organic matter (rootlets); moist		0.00								
		(CL/CI/CH) SILTY CLAY to CLAY; grey brown, contains silty sand layers (WEATHERED CRUST); cohesive, w>PL, very stiff to firm		0.15	1	GRAB	-					
1					2	SS	4					
					3	SS	2					
2												
		(CI/CH) SILTY CLAY to CLAY; grey with black organic mottling; cohesive, w>PL, soft to stiff		88.33 / 2.90								
3					4	SS	WH					
4												
5					5	SS	WH					
6					6	SS	WH					
7				83.91 / 7.32								
		(SM) gravelly SILTY SAND; grey, contains cobbles and boulders (GLACIAL TILL); non-cohesive, wet, very loose		83.61 / 7.62	7	SS	2					
		End of Borehole										
8												
9												
10												

DEPTH SCALE

1 : 50

Golder Associates

LOGGED: SN

CHECKED: SD

MIS-BHS 001 1771847.GPJ GAL-MIS.GDT 09/12/17 JEM

PROJECT: 18108333-1000

RECORD OF BOREHOLE: 18-15

SHEET 1 OF 1

LOCATION: N 5012915.4 ;E 362536.2

BORING DATE: October 25, 2018

DATUM: CGVD28

SAMPLER HAMMER, 64kg; DROP, 760mm

PENETRATION TEST HAMMER, 64kg; DROP, 760mm

DEPTH SCALE METRES	BORING METHOD	SOIL PROFILE: DESCRIPTION	STRATA PLOT	ELEV. / DEPTH (m)	SAMPLES: NUMBER	TYPE	BLOWS/0.30m	ADDITIONAL LAB. TESTING	PIEZOMETER OR STANDPIPE INSTALLATION
		GROUND SURFACE		91.23					
0	Power Auger, 200 mm Diam (Hollow Stem)	TOPSOIL - (SM) SILTY SAND; brown; moist		0.00	1	SS	7		
		(CI/CH) SILTY CLAY to CLAY; grey brown, contains silty sand seams (WEATHERED CRUST); cohesive, w>PL, stiff to very stiff		90.78 / 0.46					Bentonite Seal
1					2	SS	4		Silica Sand
					3	SS	4		
2									38 mm Diam. PVC #10 Slot Screen'B'
					4	SS	2		
		(CI/CH) SILTY CLAY to CLAY; grey, with black organic mottling, contains silty sand seams; cohesive, w>PL, firm		88.34 / 2.89					
3					5	SS	WH		
4									
5					6	SS	WH		Native Backfill
6					7	SS	WH		
7									Bentonite Seal
									Silica Sand
8					8	TP	PM	C	38 mm Diam. PVC #10 Slot Screen 'A'
9				82.09					
		End of Borehole		9.14					WL in screen 'A' at Elev. 91.38 m on April 30, 2019 WL in screen 'B' at Elev. 91.29 m on April 30, 2019
10									

DYNAMIC PENETRATION RESISTANCE, BLOWS/0.3m: 20, 40, 60, 80

SHEAR STRENGTH Cu, kPa: nat V. + Q - ●; rem V. ⊕ U - ○; 20, 40, 60, 80

HYDRAULIC CONDUCTIVITY, k, cm/s: 10^{-8}, 10^{-6}, 10^{-4}, 10^{-2}

WATER CONTENT PERCENT: Wp ⊢—○W—⊣ Wl; 20, 40, 60, 80

DEPTH SCALE

1 : 50

GOLDER

LOGGED: DJG

CHECKED:

PROJECT: 18108333-1000

RECORD OF BOREHOLE: 18-16

SHEET 1 OF 1

LOCATION: N 5012991.9 ;E 362674.2

BORING DATE: October 25, 2018

DATUM: CGVD28

SAMPLER HAMMER, 64kg; DROP, 760mm

PENETRATION TEST HAMMER, 64kg; DROP, 760mm

DEPTH SCALE METRES	BORING METHOD	SOIL PROFILE: DESCRIPTION	STRATA PLOT	ELEV. / DEPTH (m)	SAMPLES: NUMBER	TYPE	BLOWS/0.30m	DYNAMIC PENETRATION RESISTANCE, BLOWS/0.3m (20 40 60 80) / SHEAR STRENGTH Cu, kPa (nat V. + Q - ●; rem V. ⊕ U - ○) (20 40 60 80)	HYDRAULIC CONDUCTIVITY, k, cm/s (10^{-8} 10^{-6} 10^{-4} 10^{-2}) / WATER CONTENT PERCENT (Wp ⊢—○W—⊣ Wl) (20 40 60 80)	ADDITIONAL LAB. TESTING	PIEZOMETER OR STANDPIPE INSTALLATION
		GROUND SURFACE		91.48							
0	Power Auger, 200 mm Diam. (Hollow Stem)	TOPSOIL - (CL/ML) sandy SILTY CLAY to CLAYEY SILT; dark brown		0.00							
		(ML) CLAYEY SILT, trace sand; grey brown, contains silty sand seams (WEATHERED CRUST); cohesive, w>PL, very stiff to stiff		91.20 / 0.28	1	SS	5				Bentonite Seal
1					2	SS	6		NP		Silica Sand
					3	SS	5				
2					4	SS	2				38 mm Diam. PVC #10 Slot Screen
3		(CI/CH) SILTY CLAY to CLAY; grey, with black organic mottling, contains silty sand seams; cohesive, w>PL, firm to soft		88.43 / 3.05	5	SS	WH				Silica Sand Bentonite Seal
4								⊕ +			
								⊕ +			
5					6	SS	PM				Cave
								⊕ +			
6								⊕ +			
					7	SS	PM				
7								⊕ +			
								⊕ +			
		End of Borehole		83.86 / 7.62				⊕ +			
8											WL in screen at Elev. 91.35 m on April 30, 2019
9											
10											

DEPTH SCALE
1 : 50

GOLDER

LOGGED: RI
CHECKED:

PROJECT: 18108333-1000

RECORD OF BOREHOLE: 18-17

SHEET 1 OF 1

LOCATION: N 5013066.6 ;E 362813.3

BORING DATE: October 25-26, 2018

DATUM: CGVD28

SAMPLER HAMMER, 64kg; DROP, 760mm

PENETRATION TEST HAMMER, 64kg; DROP, 760mm

DEPTH SCALE METRES	BORING METHOD	SOIL PROFILE: DESCRIPTION	STRATA PLOT	ELEV. / DEPTH (m)	SAMPLES: NUMBER	TYPE	BLOWS/0.30m	DYNAMIC PENETRATION RESISTANCE, BLOWS/0.3m (20 40 60 80) / SHEAR STRENGTH Cu, kPa (nat V. + Q - ●; rem V. ⊕ U - ○) (20 40 60 80)	HYDRAULIC CONDUCTIVITY, k, cm/s (10^{-8} 10^{-6} 10^{-4} 10^{-2}) / WATER CONTENT PERCENT (Wp ⊢—○W—⊣ Wl) (20 40 60 80)	ADDITIONAL LAB. TESTING	PIEZOMETER OR STANDPIPE INSTALLATION
		GROUND SURFACE		91.47							
0	Power Auger, 200 mm Diam. (Hollow Stem)	TOPSOIL- (SM) SILTY SAND: brown; moist		0.00	1	SS	5				
		(CI/CH) SILTY CLAY to CLAY; grey brown, contains silty sand seams (WEATHERED CRUST); cohesive, w>PL, stiff to very stiff		91.01 / 0.46							Bentonite Seal
1					2	SS	3		○		
											Silica Sand
					3	SS	3				
2											38 mm Diam PVC #10 Slot Screen
					4	SS	WH				
		(CI/CH) SILTY CLAY to CLAY; grey, with black organic mottling, contains silty sand seams; cohesive, w>PL, firm to soft		88.58 / 2.89							
3											Silica Sand
					5	SS	WH		○		
4								⊕ + ⊕ +			
					6	TP	PH		○	C	
5											Cave
								⊕ + ⊕ +			
6											
					7	SS	WH		○		
7								⊕ + ⊕ +			
				83.85				⊕ +			
		End of Borehole		7.62							
8											WL in screen at Elev. 91.49 m on April 30, 2019
9											
10											

DEPTH SCALE

1 : 50

GOLDER

LOGGED: DJG

CHECKED:

PROJECT: 18108333-1000

RECORD OF BOREHOLE: 18-18

SHEET 1 OF 1

LOCATION: N 5013140.7 ;E 362950.3

BORING DATE: October 26, 2018

DATUM: CGVD28

SAMPLER HAMMER, 64kg; DROP, 760mm

PENETRATION TEST HAMMER, 64kg; DROP, 760mm

DEPTH SCALE METRES	BORING METHOD	SOIL PROFILE: DESCRIPTION	STRATA PLOT	ELEV. / DEPTH (m)	SAMPLES: NUMBER	TYPE	BLOWS/0.30m	DYNAMIC PENETRATION RESISTANCE, BLOWS/0.3m (20 40 60 80)	SHEAR STRENGTH Cu, kPa (nat V. + Q - ●; rem V. ⊕ U - ○) (20 40 60 80)	HYDRAULIC CONDUCTIVITY, k, cm/s (10^{-8} 10^{-6} 10^{-4} 10^{-2}) / WATER CONTENT PERCENT (Wp — W — Wl; 20 40 60 80)	ADDITIONAL LAB. TESTING	PIEZOMETER OR STANDPIPE INSTALLATION
		GROUND SURFACE		91.54								
0	Power Auger, 200 mm Diam. (Hollow Stem)	TOPSOIL- (CL/ML) sandy SILTY CLAY to CLAYEY SILT; dark brown		0.00 / 91.31								
		(CI/CH) SILTY CLAY to CLAY; trace to some sand; grey brown, contains silty sand seams (WEATHERED CRUST); cohesive, w>PL, very stiff to stiff		0.23	1	SS	8					Bentonite Seal
1					2	SS	4				MH	Silica Sand
					3	SS	1					
2												38 mm Diam. PVC #10 Slot Screen 'B'
		(CI/CH) SILTY CLAY to CLAY; grey with black organic mottling, contains silty sand seams; cohesive, w>PL, soft to firm		88.65 / 2.89								
3					4	SS	PM					
4												
5					5	SS	WR					Native Backfill
6					6	SS	WR					
7												Bentonite Seal
												Silica Sand
8					7	SS	WR					
												38 mm Diam. PVC #10 Slot Screen 'A'
9				82.24								
		End of Borehole		9.30								WL in screen 'A' at Elev. 91.17 m on April 30, 2019 WL in screen 'B' at Elev. 91.11 m on April 30, 2019
10												

DEPTH SCALE

1 : 50

GOLDER

LOGGED: RI

CHECKED:

PROJECT: 18108333-1000

RECORD OF BOREHOLE: 18-19

SHEET 1 OF 1

LOCATION: N 5013203.9 ;E 363070.7

BORING DATE: October 26, 2018

DATUM: CGVD28

SAMPLER HAMMER, 64kg; DROP, 760mm

PENETRATION TEST HAMMER, 64kg; DROP, 760mm

DEPTH SCALE METRES	BORING METHOD	SOIL PROFILE: DESCRIPTION	STRATA PLOT	ELEV. / DEPTH (m)	SAMPLES: NUMBER	TYPE	BLOWS/0.30m	ADDITIONAL LAB. TESTING	PIEZOMETER OR STANDPIPE INSTALLATION
		GROUND SURFACE		91.26					
0	Power Auger, 200 mm Diam. (Hollow Stem)	TOPSOIL - (CL/ML) sandy SILTY CLAY to CLAYEY SILT; dark brown		0.00 / 91.03					
		(CI/CH) SILTY CLAY to CLAY, trace to some sand; grey brown, contains silty sand seams (WEATHERED CRUST); cohesive, w>PL, very stiff to stiff		0.23	1	SS	4		Bentonite Seal
1					2	SS	4		Silica Sand
2					3	SS	WH		38 mm Diam. PVC #10 Slot Screen
3		(CI/CH) SILTY CLAY to CLAY; grey with black organic mottling, contains silty sand seams; cohesive, w>PL, firm to soft		88.21 / 3.05	4	TP	PH	C	Silica Sand
4									
5					5	SS	PM		Cave
6					6	SS	PM		
7				83.64					
		End of Borehole		7.62					
8									WL in screen at Elev. 90.85 m on April 30, 2019
9									
10									

DYNAMIC PENETRATION RESISTANCE, BLOWS/0.3m: 20, 40, 60, 80

SHEAR STRENGTH Cu, kPa: nat V. + Q - ●; rem V. ⊕ U - ○; 20, 40, 60, 80

HYDRAULIC CONDUCTIVITY, k, cm/s: 10^{-8}, 10^{-6}, 10^{-4}, 10^{-2}

WATER CONTENT PERCENT: Wp ⊢—○ W —⊣ Wl; 20, 40, 60, 80

DEPTH SCALE

1 : 50

GOLDER

LOGGED: RI

CHECKED:

PROJECT: 18108333-1000

RECORD OF BOREHOLE: 18-20

SHEET 1 OF 1

LOCATION: N 5013313.4 ;E 363192.4

BORING DATE: October 26, 2018

DATUM: CGVD28

SAMPLER HAMMER, 64kg; DROP, 760mm

PENETRATION TEST HAMMER, 64kg; DROP, 760mm

DEPTH SCALE METRES	BORING METHOD	SOIL PROFILE: DESCRIPTION	STRATA PLOT	ELEV. / DEPTH (m)	SAMPLES: NUMBER	TYPE	BLOWS/0.30m	DYNAMIC PENETRATION RESISTANCE, BLOWS/0.3m (20 40 60 80) / SHEAR STRENGTH Cu, kPa (nat V. + Q - ●; rem V. ⊕ U - ○) (20 40 60 80)	HYDRAULIC CONDUCTIVITY, k, cm/s (10^{-8} 10^{-6} 10^{-4} 10^{-2}) / WATER CONTENT PERCENT (Wp ⊢—○W—⊣ Wl) (20 40 60 80)	ADDITIONAL LAB. TESTING	PIEZOMETER OR STANDPIPE INSTALLATION
		GROUND SURFACE		91.29							
0	Power Auger, 200 mm Diam. (Hollow Stem)	TOPSOIL - (SM) SILTY SAND: brown		0.00							
		(CI/CH) SILTY CLAY to CLAY; grey brown, contains silty sand seams (WEATHERED CRUST); cohesive, w>PL, stiff to very stiff		90.99 / 0.30	1	SS	8				Bentonite Seal
1					2	SS	4				Silica Sand
2					3	SS	3				38 mm Diam. PVC #10 Slot Screen
					4	SS	3				
		(CI/CH) SILTY CLAY to CLAY; grey with black organic mottling, contains silty sand seams; cohesive, w>PL, firm		88.40 / 2.89							
3					5	SS	WH				
4											
5					6	SS	WH				Cave
6											
					7	SS	WH				
7											
		End of Borehole		83.67 / 7.62							
8											WL in screen at Elev. 91.06 m on April 30, 2019
9											
10											

DEPTH SCALE

1 : 50

GOLDER

LOGGED: DJG

CHECKED:

PROJECT: 18108333-1000

RECORD OF BOREHOLE: 18-21

SHEET 1 OF 1

LOCATION: N 5013407.0 ;E 363310.1

BORING DATE: October 26, 2018

DATUM: CGVD28

SAMPLER HAMMER, 64kg; DROP, 760mm

PENETRATION TEST HAMMER, 64kg; DROP, 760mm

DEPTH SCALE METRES	BORING METHOD	SOIL PROFILE: DESCRIPTION	STRATA PLOT	ELEV. / DEPTH (m)	SAMPLES: NUMBER	TYPE	BLOWS/0.30m	ADDITIONAL LAB. TESTING	PIEZOMETER OR STANDPIPE INSTALLATION
		GROUND SURFACE		91.36					
0	Power Auger, 200 mm Diam. (Hollow Stem)	TOPSOIL - (CL/ML) sandy SILTY CLAY to CLAYEY SILT, trace gravel; dark brown		0.00	1	SS	6		
		(CI/CH) SILTY CLAY to CLAY, trace to some sand; grey brown, contains silty sand seams (WEATHERED CRUST); cohesive, w>PL, very stiff to stiff		90.95 / 0.41	2	SS	5		Bentonite Seal
1									Silica Sand
2					3	SS	2		38 mm Diam. PVC #10 Slot Screen
3		(CI/CH) SILTY CLAY to CLAY; grey, with black organic mottling, contains silty sand seams; cohesive, w>PL, firm		88.31 / 3.05	4	SS	WH		Silica Sand Bentonite Seal
4									
5					5	TP	PH		Cave
6					6	SS	WR		
7				83.74					
		End of Borehole		7.62					
8									WL in screen at Elev. 91.19 m on April 30, 2019
9									
10									

DYNAMIC PENETRATION RESISTANCE, BLOWS/0.3m: 20, 40, 60, 80

SHEAR STRENGTH Cu, kPa: nat V. + Q - ●; rem V. ⊕ U - ○; 20, 40, 60, 80

HYDRAULIC CONDUCTIVITY, k, cm/s: 10^{-8}, 10^{-6}, 10^{-4}, 10^{-2}

WATER CONTENT PERCENT: Wp ⊢—○ W —⊣ Wl; 20, 40, 60, 80

DEPTH SCALE

1 : 50

GOLDER

LOGGED: RI

CHECKED:

PROJECT: 18108333-1000

RECORD OF BOREHOLE: 18-22

SHEET 1 OF 1

LOCATION: N 5013468.7 ;E 363456.4

BORING DATE: October 26, 2018

DATUM: CGVD28

SAMPLER HAMMER, 64kg; DROP, 760mm

PENETRATION TEST HAMMER, 64kg; DROP, 760mm

DEPTH SCALE METRES	BORING METHOD	SOIL PROFILE: DESCRIPTION	STRATA PLOT	ELEV. / DEPTH (m)	SAMPLES: NUMBER	TYPE	BLOWS/0.30m	ADDITIONAL LAB. TESTING	PIEZOMETER OR STANDPIPE INSTALLATION
		GROUND SURFACE		91.31					
0	Power Auger, 200 mm Diam. (Hollow Stem)	TOPSOIL - (SM) CLAYEY SILTY SAND; brown		0.00					
		(CI/CH) SILTY CLAY to CLAY; grey brown, contains silty sand seams (WEATHERED CRUST); cohesive, w>PL, very stiff to stiff		91.01 / 0.30	1	SS	6		Bentonite Seal
1					2	SS	7		Silica Sand
2					3	SS	4		38 mm Diam. PVC #10 Slot Screen 'B'
					4	SS	3		
		(CI/CH) SILTY CLAY to CLAY; grey, contains silty sand seams; cohesive, w>PL, firm		88.42 / 2.89					
3					5	SS	WH		
4									Native Backfill
5					6	SS	WH		
6					7	SS	WH		Bentonite Seal
7									Silica Sand
8					8	SS	WH		38 mm Diam. PVC #10 Slot Screen 'A'
9		End of Borehole		82.17 / 9.14					WL in screen 'A' at Elev. 91.49 m on April 30, 2019 WL in screen 'B' at Elev. 91.15 m on April 30, 2019
10									

DYNAMIC PENETRATION RESISTANCE, BLOWS/0.3m: 20, 40, 60, 80

SHEAR STRENGTH Cu, kPa: nat V. + Q - ●; rem V. ⊕ U - ○; 20, 40, 60, 80

HYDRAULIC CONDUCTIVITY, k, cm/s: 10^{-8}, 10^{-6}, 10^{-4}, 10^{-2}

WATER CONTENT PERCENT: Wp ⊢—○W—⊣ Wl; 20, 40, 60, 80

DEPTH SCALE

1 : 50

GOLDER

LOGGED: DJG

CHECKED:

PROJECT: 18108333-1000

RECORD OF BOREHOLE: 18-23

SHEET 1 OF 1

LOCATION: N 5013542.8 ;E 363593.8

BORING DATE: November 1, 2018

DATUM: CGVD28

SAMPLER HAMMER, 64kg; DROP, 760mm

PENETRATION TEST HAMMER, 64kg; DROP, 760mm

DEPTH SCALE METRES	BORING METHOD	SOIL PROFILE: DESCRIPTION	STRATA PLOT	ELEV. / DEPTH (m)	SAMPLES: NUMBER	TYPE	BLOWS/0.30m	DYNAMIC PENETRATION RESISTANCE, BLOWS/0.3m (20 40 60 80)	SHEAR STRENGTH Cu, kPa (nat V. + Q - ●; rem V. ⊕ U - ○) (20 40 60 80)	HYDRAULIC CONDUCTIVITY, k, cm/s (10^{-8} 10^{-6} 10^{-4} 10^{-2}) / WATER CONTENT PERCENT (Wp ⊢—○W—⊣ Wl) (20 40 60 80)	ADDITIONAL LAB. TESTING	PIEZOMETER OR STANDPIPE INSTALLATION
		GROUND SURFACE		91.32								
0	Power Auger, 200 mm Diam. (Hollow Stem)	TOPSOIL - (ML) CLAYEY SILT; dark brown		0.00 / 91.06								
		(CL/CI/CH) SILTY CLAY to CLAY; grey brown, contains silty sand seams (WEATHERED CRUST); cohesive, w>PL, stiff to very stiff		0.25	1	SS	3					Bentonite Seal
1					2	SS	4					Silica Sand
2					3	SS	3					38 mm Diam. PVC #10 Slot Screen
					4	SS	3					
		(CI/CH) SILTY CLAY to CLAY; grey brown to grey, contains silty sand seams; cohesive, w>PL, stiff to firm		88.43 / 2.89								
3					5	SS	PM					
4								⊕	+			
								⊕	+			
5					6	TP	PH					Cave
								⊕	+			
								⊕	+			
6		(SM) gravelly SILTY SAND; grey, contains silty clay seams (GLACIAL TILL); non-cohesive, wet, loose		85.23 / 6.09	7	SS	7			○	MH	
7					8	SS	5					
		End of Borehole		83.86 / 7.46								
8												WL in screen at Elev. 91.17 m on April 30, 2019
9												
10												

DEPTH SCALE

1 : 50

GOLDER

LOGGED: DJG

CHECKED:

PROJECT: 18108333-1000

RECORD OF BOREHOLE: 18-24

SHEET 1 OF 1

LOCATION: N 5013596.7 ;E 363722.6

BORING DATE: November 1, 2018

DATUM: CGVD28

SAMPLER HAMMER, 64kg; DROP, 760mm

PENETRATION TEST HAMMER, 64kg; DROP, 760mm

DEPTH SCALE METRES	BORING METHOD	SOIL PROFILE: DESCRIPTION	STRATA PLOT	ELEV. / DEPTH (m)	SAMPLES: NUMBER	TYPE	BLOWS/0.30m	DYNAMIC PENETRATION RESISTANCE, BLOWS/0.3m (20 40 60 80)	SHEAR STRENGTH Cu, kPa (nat V. + Q - ●; rem V. ⊕ U - ○) (20 40 60 80)	HYDRAULIC CONDUCTIVITY, k, cm/s (10^{-8} 10^{-6} 10^{-4} 10^{-2})	WATER CONTENT PERCENT (Wp ⊢—○W—⊣ Wl) (20 40 60 80)	ADDITIONAL LAB. TESTING	PIEZOMETER OR STANDPIPE INSTALLATION
		GROUND SURFACE		91.23									
0	Power Auger, 200 mm Diam. (Hollow Stem)	TOPSOIL - (ML) CLAYEY SILT; dark brown		0.00									
		(CI/CH) SILTY CLAY to CLAY, some sand; grey brown, contains silty sand seams (WEATHERED CRUST); cohesive, w>PL, very stiff to stiff		90.93 / 0.30	1	SS	3						Bentonite Seal
1					2	SS	5						Silica Sand
					3	SS	3						
2		CI/CH) SILTY CLAY to CLAY; grey, contains silty sand seams; cohesive, w>PL, firm		89.10 / 2.13									38 mm Diam. PVC #10 Slot Screen
					4	SS	3						
3					5	SS	PM						
4								⊕	+ ⊕ +				
					6	SS	PM						
5		(SM/ML) gravelly SILTY SAND to sandy SILT; grey, contains silty clay seams (GLACIAL TILL); non-cohesive, wet, very loose to compact		86.10 / 5.13									Cave
					7	SS	4						
6					8	SS	4						
7				83.77	9	SS	19						
		End of Borehole		7.46									
8													WL in screen at Elev. 91.11 m on April 30, 2019
9													
10													

DEPTH SCALE

1 : 50

GOLDER

LOGGED: DJG

CHECKED:

PROJECT: 18108333-1000

RECORD OF BOREHOLE: 18-25

SHEET 1 OF 1

LOCATION: N 5012863.7 ;E 362664.5

BORING DATE: October 29, 2018

DATUM: CGVD28

SAMPLER HAMMER, 64kg; DROP, 760mm

PENETRATION TEST HAMMER, 64kg; DROP, 760mm

DEPTH SCALE METRES	BORING METHOD	SOIL PROFILE: DESCRIPTION	STRATA PLOT	ELEV. / DEPTH (m)	SAMPLES: NUMBER	TYPE	BLOWS/0.30m	DYNAMIC PENETRATION RESISTANCE, BLOWS/0.3m (20 40 60 80) / SHEAR STRENGTH Cu, kPa (nat V. + Q - ●; rem V. ⊕ U - ○) (20 40 60 80)	HYDRAULIC CONDUCTIVITY, k, cm/s (10^{-8} 10^{-6} 10^{-4} 10^{-2}) / WATER CONTENT PERCENT (Wp ⊢—○ W —⊣ Wl) (20 40 60 80)	ADDITIONAL LAB. TESTING	PIEZOMETER OR STANDPIPE INSTALLATION
		GROUND SURFACE		91.24							
0	Power Auger, 200 mm Diam. (Hollow Stem)	TOPSOIL- (ML/CL) SILTY CLAY to CLAYEY SILT; dark brown		0.00 / 91.01							
		(CL-ML) SILTY CLAY to CLAYEY SILT, trace to some sand; grey brown, contains silty sand seams (WEATHERED CRUST); cohesive, w>PL, very stiff to stiff		0.23	1	SS	5				Bentonite Seal
1					2	SS	2		⊢○		Silica Sand
					3	SS	2				
2								>96 +			38 mm Diam. PVC #10 Slot Screen
								>96 +			
3		(CI/CH) SILTY CLAY to CLAY; grey, with black organic mottling; cohesive, w>PL, firm to soft		88.19 / 3.05	4	SS	1				
4								⊕ +			
								⊕ +			
5					5	SS	WH		⊢—○		Cave
								⊕ +			
6								⊕ +			
					6	SS	WH				
7								⊕ +			
								⊕ +			
		End of Borehole		83.62 / 7.62				⊕ +			
8											WL in screen at Elev. 91.16 m on April 30, 2019
9											
10											

DEPTH SCALE

1 : 50

GOLDER

LOGGED: RI

CHECKED:

PROJECT: 18108333-1000

RECORD OF BOREHOLE: 18-26

SHEET 1 OF 1

LOCATION: N 5012929.0 ;E 362807.5

BORING DATE: October 29, 2018

DATUM: CGVD28

SAMPLER HAMMER, 64kg; DROP, 760mm

PENETRATION TEST HAMMER, 64kg; DROP, 760mm

DEPTH SCALE METRES	BORING METHOD	SOIL PROFILE: DESCRIPTION	STRATA PLOT	ELEV. / DEPTH (m)	SAMPLES: NUMBER	TYPE	BLOWS/0.30m	ADDITIONAL LAB. TESTING	PIEZOMETER OR STANDPIPE INSTALLATION
		GROUND SURFACE		91.45					
0	Power Auger, 200 mm Diam. (Hollow Stem)	TOPSOIL - (SM) SILTY SAND; dark brown		0.00					
		(CL/ML) CLAYEY SILT to sandy SILT; grey brown; non-cohesive, moist, loose		91.15 / 0.30	1	SS	5		Bentonite Seal
1					2	SS	4		
		(CI/CH) SILTY CLAY to CLAY, some sand; grey brown, contains silty sand seams (WEATHERED CRUST); cohesive, w>PL, very stiff to stiff		90.08 / 1.37					Silica Sand
2					3	SS	3		
					4	SS	3		38 mm Diam. PVC #10 Slot Screen 'B'
3		(CI/CH) SILTY CLAY to CLAY; grey, with black organic mottling, contains silty sand seams; cohesive, w>PL, firm to soft		88.56 / 2.89	5	SS	WH		
4									
					6	SS	WH		
5									Native Backfill
6					7	TP	PH	C	
7									Bentonite Seal
									Silica Sand
8					8	SS	PM		
									38 mm Diam. PVC #10 Slot Screen 'A'
9				82.31					
		End of Borehole		9.14					WL in screen 'A' at Elev. 91.00 m on April 30, 2019 WL in screen 'B' at Elev. 91.07 m on April 30, 2019
10									

DYNAMIC PENETRATION RESISTANCE, BLOWS/0.3m: 20, 40, 60, 80

SHEAR STRENGTH Cu, kPa: nat V. + Q - ●; rem V. ⊕ U - ○; 20, 40, 60, 80

HYDRAULIC CONDUCTIVITY, k, cm/s: 10^{-8}, 10^{-6}, 10^{-4}, 10^{-2}

WATER CONTENT PERCENT: Wp ⊢—○W—⊣ Wl; 20, 40, 60, 80

DEPTH SCALE

1 : 50

GOLDER

LOGGED: DJG

CHECKED:

PROJECT: 18108333-1000

RECORD OF BOREHOLE: 18-27

SHEET 1 OF 1

LOCATION: N 5012986.9 ;E 362954.7

BORING DATE: October 29, 2018

DATUM: CGVD28

SAMPLER HAMMER, 64kg; DROP, 760mm

PENETRATION TEST HAMMER, 64kg; DROP, 760mm

DEPTH SCALE METRES	BORING METHOD	SOIL PROFILE: DESCRIPTION	STRATA PLOT	ELEV. / DEPTH (m)	SAMPLES: NUMBER	TYPE	BLOWS/0.30m	DYNAMIC PENETRATION RESISTANCE, BLOWS/0.3m (20 40 60 80)	SHEAR STRENGTH Cu, kPa (nat V. + Q - ●; rem V. ⊕ U - ○) (20 40 60 80)	HYDRAULIC CONDUCTIVITY, k, cm/s (10^{-8} 10^{-6} 10^{-4} 10^{-2})	WATER CONTENT PERCENT (Wp ⊢—○ W —⊣ Wl) (20 40 60 80)	ADDITIONAL LAB. TESTING	PIEZOMETER OR STANDPIPE INSTALLATION
		GROUND SURFACE		91.38									
0	Power Auger, 200 mm Diam. (Hollow Stem)	TOPSOIL - (ML) CLAYEY sandy SILT, trace gravel; dark brown		0.00 / 91.18									
		(CL) sandy CLAYEY SILT; grey brown, (WEATHERED CRUST) cohesive, w>PL, stiff to very stiff		0.20	1	SS	4						Bentonite
1					2	SS	1						Silica Sand
		(CI/CH) SILTY CLAY to CLAY; grey brown, contains silty sand seams (WEATHERED CRUST); cohesive, w>PL, very stiff to stiff		89.86 / 1.52	3	SS	1						38 mm Diam. PVC #10 Slot Screen
2													
3		(CI/CH) SILTY CLAY to CLAY; grey, with black organic mottling, contains silty sand seams; cohesive, w>PL, firm to soft		88.33 / 3.05	4	SS	PM						Silica Sand
4													
5					5	SS	PM						Cave
6					6	SS	PM						
7				83.76 / 7.62									
		End of Borehole											
8													WL in screen at Elev. 91.37 m on April 30, 2019
9													
10													

DEPTH SCALE
1 : 50

GOLDER

LOGGED: RI
CHECKED:

PROJECT: 18108333-1000

RECORD OF BOREHOLE: 18-28

SHEET 1 OF 1

LOCATION: N 5013120.1 ;E 363120.3

BORING DATE: October 30, 2018

DATUM: CGVD28

SAMPLER HAMMER, 64kg; DROP, 760mm

PENETRATION TEST HAMMER, 64kg; DROP, 760mm

DEPTH SCALE METRES	BORING METHOD	SOIL PROFILE: DESCRIPTION	STRATA PLOT	ELEV. / DEPTH (m)	SAMPLES: NUMBER	TYPE	BLOWS/0.30m	ADDITIONAL LAB. TESTING	PIEZOMETER OR STANDPIPE INSTALLATION
		GROUND SURFACE		91.17					
0	Power Auger, 200 mm Diam. (Hollow Stem)	TOPSOIL - (ML) CLAYEY SILT; dark brown		0.00					
		(CI/CH) SILTY CLAY to CLAY, trace sand; grey brown, contains silty sand layers (WEATHERED CRUST); cohesive, w>PL, very stiff to stiff		90.87 / 0.30	1	SS	4		Bentonite Seal
1					2	SS	5		Silica Sand
					3	SS	3		
2					4	SS	3		38 mm Diam. PVC #10 Slot Screen
		(CI/CH) SILTY CLAY to CLAY; grey with black organic mottling, contains silty sand seams; cohesive, w>PL, firm to soft		88.28 / 2.89					
3					5	SS	WH		
4									
5					6	SS	WH		Cave
6									
					7	SS	WH		
7									
				83.55					
		End of Borehole		7.62					
8									WL in screen at Elev. 90.94 m on April 30, 2019
9									
10									

DYNAMIC PENETRATION RESISTANCE, BLOWS/0.3m: 20, 40, 60, 80

SHEAR STRENGTH Cu, kPa: nat V. + Q - ●; rem V. ⊕ U - ○; 20, 40, 60, 80

HYDRAULIC CONDUCTIVITY, k, cm/s: 10^{-8}, 10^{-6}, 10^{-4}, 10^{-2}

WATER CONTENT PERCENT: Wp ⊢—○W—⊣ Wl; 20, 40, 60, 80

DEPTH SCALE

1 : 50

GOLDER

LOGGED: DJG

CHECKED:

PROJECT: 18108333-1000

RECORD OF BOREHOLE: 18-29

SHEET 1 OF 1

LOCATION: N 5013204.1 ;E 363249.1

BORING DATE: October 30, 2018

DATUM: CGVD28

SAMPLER HAMMER, 64kg; DROP, 760mm

PENETRATION TEST HAMMER, 64kg; DROP, 760mm

DEPTH SCALE METRES	BORING METHOD	SOIL PROFILE: DESCRIPTION	STRATA PLOT	ELEV. / DEPTH (m)	SAMPLES: NUMBER	TYPE	BLOWS/0.30m	ADDITIONAL LAB. TESTING	PIEZOMETER OR STANDPIPE INSTALLATION
		GROUND SURFACE		91.04					
0	Power Auger, 200 mm Diam. (Hollow Stem)	TOPSOIL - (ML) CLAYEY SILT; dark brown		0.00					
		(CI/CH) SILTY CLAY to CLAY; grey brown, contains silty sand seams (WEATHERED CRUST); cohesive, w>PL, very stiff		90.74 / 0.30	1	SS	7		Bentonite Seal
1					2	SS	4		Silica Sand
					3	SS	3		
2		(CI/CH) SILTY CLAY to CLAY; grey with black organic mottling, contains silty sand seams; cohesive, w>PL, firm		88.91 / 2.13					38 mm Diam. PVC #10 Slot Screen
					4	SS	3		
3					5	SS	WH		
4									
5					6	SS	PM		Cave
6									
					7	TP	PH		
7				83.42					
		End of Borehole		7.62					
8									WL in screen at Elev. 90.85 m on April 30, 2019
9									
10									

DYNAMIC PENETRATION RESISTANCE, BLOWS/0.3m: 20, 40, 60, 80

SHEAR STRENGTH Cu, kPa: nat V. + Q - ●; rem V. ⊕ U - ○; 20, 40, 60, 80

HYDRAULIC CONDUCTIVITY, k, cm/s: 10^{-8}, 10^{-6}, 10^{-4}, 10^{-2}

WATER CONTENT PERCENT: Wp ⊢—○—⊣ WI; W; 20, 40, 60, 80

DEPTH SCALE

1 : 50

GOLDER

LOGGED: DJG

CHECKED:

PROJECT: 18108333-1000

RECORD OF BOREHOLE: 18-30

SHEET 1 OF 1

LOCATION: N 5013258.1 ;E 363330.0

BORING DATE: October 30, 2018

DATUM: CGVD28

SAMPLER HAMMER, 64kg; DROP, 760mm

PENETRATION TEST HAMMER, 64kg; DROP, 760mm

DEPTH SCALE METRES	BORING METHOD	SOIL PROFILE – DESCRIPTION	STRATA PLOT	ELEV. / DEPTH (m)	SAMPLES – NUMBER	TYPE	BLOWS/0.30m	DYNAMIC PENETRATION RESISTANCE, BLOWS/0.3m (20 40 60 80)	SHEAR STRENGTH Cu, kPa (nat V. + Q - ●; rem V. ⊕ U - ○) (20 40 60 80)	HYDRAULIC CONDUCTIVITY, k, cm/s (10^{-8} 10^{-6} 10^{-4} 10^{-2}) / WATER CONTENT PERCENT (Wp ⊢—○W—⊣ Wl) (20 40 60 80)	ADDITIONAL LAB. TESTING	PIEZOMETER OR STANDPIPE INSTALLATION
		GROUND SURFACE		90.95								
0	Power Auger, 200 mm Diam. (Hollow Stem)	TOPSOIL -(ML) CLAYEY SILT, some sand; dark brown		0.00								
		(CI/CH) SILTY CLAY to CLAY, trace to some sand; grey brown, contains silty sand seams (WEATHERED CRUST); cohesive, w>PL, very stiff to stiff		90.75 / 0.20	1	SS	7					Bentonite Seal
1					2	SS	4					Silica Sand
					3	SS	2					
2									>96 +			38 mm Diam. PVC #10 Slot Screen 'B'
3		(CI/CH) SILTY CLAY to CLAY; grey, contains silty sand seams; cohesive, firm		87.90 / 3.05	4	SS	WH					
4												
5					5	SS	PM					Native Backfill
6					7	SS	PM					
7												Bentonite Seal
												Silica Sand
8					8	SS	PM					38 mm Diam. PVC #10 Slot Screen 'A'
9		End of Borehole		81.80 / 9.15								WL in screen 'A' at Elev. 91.25 m on April 30, 2019 WL in screen 'B' at Elev. 90.94 m on April 30, 2019
10												

DEPTH SCALE

1 : 50

GOLDER

LOGGED: RI

CHECKED:

PROJECT: 18108333-1000

RECORD OF BOREHOLE: 18-31

SHEET 1 OF 1

LOCATION: N 5013362.7 ;E 363389.5

BORING DATE: October 31, 2018

DATUM: CGVD28

SAMPLER HAMMER, 64kg; DROP, 760mm

PENETRATION TEST HAMMER, 64kg; DROP, 760mm

DEPTH SCALE METRES	BORING METHOD	SOIL PROFILE: DESCRIPTION	STRATA PLOT	ELEV. / DEPTH (m)	SAMPLES: NUMBER	TYPE	BLOWS/0.30m	ADDITIONAL LAB. TESTING	PIEZOMETER OR STANDPIPE INSTALLATION
		GROUND SURFACE		91.06					
0	Power Auger, 200 mm Diam. (Hollow Stem)	TOPSOIL - (ML) CLAYEY SILT: dark brown		0.00					
		(CI/CH) SILTY CLAY to CLAY; grey brown, contains silty sand seams (WEATHERED CRUST); cohesive, w>PL, very stiff to stiff		90.76 / 0.30	1	SS	5		Bentonite Seal
1					2	SS	4	MH	Silica Sand
					3	SS	3		
2		(CI/CH) SILTY CLAY to CLAY; grey brown to grey with black organic mottling, contains silty sand seams; cohesive, w>PL, firm		88.93 / 2.13	4	SS	3		38 mm Diam. PVC #10 Slot Screen
3					5	SS	PM		
4									
5					6	SS	PH		Cave
6									
7					7	SS	PH		
		End of Borehole		83.44 / 7.62					
8									WL in screen at Elev. 90.94 m on April 30, 2019
9									
10									

DYNAMIC PENETRATION RESISTANCE, BLOWS/0.3m: 20, 40, 60, 80

SHEAR STRENGTH Cu, kPa: nat V. + Q - ●; rem V. ⊕ U - ○; 20, 40, 60, 80

HYDRAULIC CONDUCTIVITY, k, cm/s: 10^{-8}, 10^{-6}, 10^{-4}, 10^{-2}

WATER CONTENT PERCENT: Wp ⊢—○ W —⊣ Wl; 20, 40, 60, 80

DEPTH SCALE

1 : 50

GOLDER

LOGGED: DJG

CHECKED:

PROJECT: 18108333-1000

RECORD OF BOREHOLE: 18-32

SHEET 1 OF 1

LOCATION: N 5013379.1 ;E 363514.2

BORING DATE: October 31, 2018

DATUM: CGVD28

SAMPLER HAMMER, 64kg; DROP, 760mm

PENETRATION TEST HAMMER, 64kg; DROP, 760mm

DEPTH SCALE METRES	BORING METHOD	SOIL PROFILE: DESCRIPTION	STRATA PLOT	ELEV. / DEPTH (m)	SAMPLES: NUMBER	TYPE	BLOWS/0.30m	ADDITIONAL LAB. TESTING	PIEZOMETER OR STANDPIPE INSTALLATION
		GROUND SURFACE		90.83					
0	Power Auger, 200 mm Diam. (Hollow Stem)	TOPSOIL- (CL/ML) SILTY CLAY to CLAYEY SILT, trace to some sand; dark brown		0.00 / 90.58					
		(CI/CH) SILTY CLAY to CLAY, trace sand; grey brown, contains silty sand seams (WEATHERED CRUST); cohesive, w>PL, very stiff to stiff		0.25	1	SS	10		Bentonite Seal
1					2	SS	7		Silica Sand
2					3	SS	1		38 mm Diam. PVC #10 Slot Screen
3		(CI/CH) SILTY CLAY to CLAY; grey, contains silty sand seams; cohesive, w>PL, firm		87.78 / 3.05	4	SS	PM		Silica Sand
4									
5					5	SS	PM		Cave
6					6	SS	PM	C	
7				83.21					
		End of Borehole		7.62					
8									WL in screen at Elev. 90.74 m on April 30, 2019
9									
10									

DYNAMIC PENETRATION RESISTANCE, BLOWS/0.3m: 20, 40, 60, 80

SHEAR STRENGTH Cu, kPa: nat V. + Q - ●; rem V. ⊕ U - ○; 20, 40, 60, 80

HYDRAULIC CONDUCTIVITY, k, cm/s: 10^{-8}, 10^{-6}, 10^{-4}, 10^{-2}

WATER CONTENT PERCENT: Wp ⊢—○ W —⊣ Wl; 20, 40, 60, 80

DEPTH SCALE

1 : 50

GOLDER

LOGGED: RI

CHECKED:

PROJECT: 18108333-1000

RECORD OF BOREHOLE: 18-33

SHEET 1 OF 1

LOCATION: N 5013454.9 ;E 363649.3

BORING DATE: November 2, 2018

DATUM: CGVD28

SAMPLER HAMMER, 64kg; DROP, 760mm

PENETRATION TEST HAMMER, 64kg; DROP, 760mm

DEPTH SCALE METRES	BORING METHOD	SOIL PROFILE – DESCRIPTION	STRATA PLOT	ELEV. / DEPTH (m)	SAMPLES NUMBER	TYPE	BLOWS/0.30m	ADDITIONAL LAB. TESTING	PIEZOMETER OR STANDPIPE INSTALLATION
		GROUND SURFACE		91.13					
0	Power Auger, 200 mm Diam. (Hollow Stem)	TOPSOIL - (CL/ML) SILTY CLAY to CLAYEY SILT, trace to some sand; dark brown		0.00 / 90.90					
		(CI/CH) SILTY CLAY to CLAY, some sand; grey brown, contains silty sand (WEATHERED CRUST); cohesive, w>PL, very stiff to stiff		0.23	1	SS	7		Bentonite Seal
1					2	SS	4	MH	Silica Sand
					3	SS	2		
2									38 mm Diam. PVC #10 Slot Screen
3		(CI/CH) SILTY CLAY to CLAY; grey; cohesive, w>PL, firm to soft		88.08 / 3.05	4	SS	WH		Silica Sand
4									
5					5	SS	1		
		(SM) gravelly SILTY SAND; grey, contains cobbles (GLACIAL TILL); non-cohesive, wet, compact		85.95 / 5.18	6	SS	13	MH	Cave
6		(SP) SAND, trace to some gravel; grey; non-cohesive, wet, very loose to loose		85.03 / 6.10	7	SS	4		
		(SM) gravelly SILTY SAND; grey, contains cobbles (GLACIAL TILL); non-cohesive, wet, very loose		84.58 / 6.55	8	SS	1		
7		End of Borehole		83.66 / 7.47					
8									WL in screen at Elev. 90.81 m on April 30, 2019
9									
10									

DYNAMIC PENETRATION RESISTANCE, BLOWS/0.3m: 20, 40, 60, 80

SHEAR STRENGTH Cu, kPa: nat V. + Q - ●; rem V. ⊕ U - ○; 20, 40, 60, 80

HYDRAULIC CONDUCTIVITY, k, cm/s: 10^{-8}, 10^{-6}, 10^{-4}, 10^{-2}

WATER CONTENT PERCENT: Wp ⊢—○ W —⊣ Wl; 20, 40, 60, 80

DEPTH SCALE

1 : 50

GOLDER

LOGGED: RI

CHECKED:

PROJECT: 18108333-1000

RECORD OF BOREHOLE: 18-34

SHEET 1 OF 1

LOCATION: N 5013533.9 ;E 363753.5

BORING DATE: November 1, 2018

DATUM: CGVD28

SAMPLER HAMMER, 64kg; DROP, 760mm

PENETRATION TEST HAMMER, 64kg; DROP, 760mm

DEPTH SCALE METRES	BORING METHOD	SOIL PROFILE DESCRIPTION	ELEV. / DEPTH (m)	SAMPLES NUMBER	TYPE	BLOWS/0.30m	ADDITIONAL LAB. TESTING	PIEZOMETER OR STANDPIPE INSTALLATION
		GROUND SURFACE	91.30					
0	Power Auger, 200 mm Diam. (Hollow Stem)	TOPSOIL - (CL/ML) SILTY CLAY to CLAYEY SILT, trace to some sand; dark brown	0.00 / 91.05					
		(CI/CH) SILTY CLAY to CLAY, trace to some sand; grey brown, contains silty sand seams (WEATHERED CRUST); cohesive, w>PL, very stiff to stiff	0.25	1	SS	9		Bentonite Seal
1				2	SS	5		Silica Sand
				3	SS	3		
2								38 mm Diam. PVC #10 Slot Screen 'B'
		(CI/CH) SILTY CLAY to CLAY; grey; cohesive, w>PL, firm	88.56 / 2.74					
3				4	TP	PH		
		(SM) gravelly SILTY SAND; grey, contains cobbles (GLACIAL TILL); non-cohesive, wet, very loose to compact	87.64 / 3.66					
4				5	SS	4		
				6	SS	6		Native Backfill
5				7	SS	6		
6				8	SS	12		Bentonite Seal
7				9	SS	4		Silica Sand
		(SM) gravelly SILTY SAND; grey, contains cobbles (GLACIAL TILL); non-cohesive, wet, dense	83.68 / 7.62					
8				10	SS	48		38 mm Diam. PVC #10 Slot Screen 'A'
				11	SS	30		
9		End of Borehole Auger Refusal	82.31 / 8.99					WL in screen 'A' at Elev. 90.80 m on April 30, 2019 WL in screen 'B' at Elev. 90.60 m on April 30, 2019
10								

DYNAMIC PENETRATION RESISTANCE, BLOWS/0.3m: 20, 40, 60, 80

SHEAR STRENGTH Cu, kPa: nat V. + Q - ●; rem V. ⊕ U - ○; 20, 40, 60, 80

HYDRAULIC CONDUCTIVITY, k, cm/s: 10^{-8}, 10^{-6}, 10^{-4}, 10^{-2}

WATER CONTENT PERCENT: Wp ⊢—○W—⊣ Wl; 20, 40, 60, 80

DEPTH SCALE

1 : 50

GOLDER

LOGGED: RI

CHECKED:

PROJECT: 18108333-1000

RECORD OF BOREHOLE: 18-35

SHEET 1 OF 1

LOCATION: N 5013586.4 ;E 363871.9

BORING DATE: November 1, 2018

DATUM: CGVD28

SAMPLER HAMMER, 64kg; DROP, 760mm

PENETRATION TEST HAMMER, 64kg; DROP, 760mm

DEPTH SCALE METRES	BORING METHOD	SOIL PROFILE: DESCRIPTION	STRATA PLOT	ELEV. / DEPTH (m)	SAMPLES: NUMBER	TYPE	BLOWS/0.30m	ADDITIONAL LAB. TESTING	PIEZOMETER OR STANDPIPE INSTALLATION
		GROUND SURFACE		91.56					
0	Power Auger, 200 mm Diam. (Hollow Stem)	TOPSOIL - (SM/ML) SILTY SAND to sandy SILT; dark brown		0.00 / 91.33					
		(SM/ML) SILTY SAND to sandy SILT; grey brown, contains silty clay seams; non-cohesive, moist, loose		0.23 / 90.87	1	SS	6		Bentontie Seal
		(CI/CH) SILTY CLAY to CLAY, trace sand; grey brown, contains silty sand seams (WEATHERED CRUST); cohesive, w>PL, very stiff to stiff		0.69	2	SS	4		Silica Sand
1									
					3	SS	3		38 mm diam. PVC #10 Slot Screen
2									
3		(CI/CH) SILTY CLAY to CLAY; grey; cohesive, w>PL, firm to stiff		88.51 / 3.05	4	SS	PM		Silica Sand
4									
5					5	SS	PM		Cave
6		(SM) gravelly silty sand; grey, contains cobbles (GLACIAL TILL); non-cohesive, wet, loose to very loose		85.31 / 6.25	6	SS	5		
7					7	SS	4		
		End of Borehole		84.09 / 7.47					
8									WL in screen at Elev. 90.88 m on April 30, 2019
9									
10									

DYNAMIC PENETRATION RESISTANCE, BLOWS/0.3m: 20, 40, 60, 80

SHEAR STRENGTH Cu, kPa: nat V. + Q - ●; rem V. ⊕ U - ○; 20, 40, 60, 80

HYDRAULIC CONDUCTIVITY, k, cm/s: 10^{-8}, 10^{-6}, 10^{-4}, 10^{-2}

WATER CONTENT PERCENT: Wp ⊢—○ W —⊣ Wl; 20, 40, 60, 80

DEPTH SCALE

1 : 50

GOLDER

LOGGED: RI

CHECKED:

PROJECT: 18108333-1000

RECORD OF BOREHOLE: 18-36

SHEET 1 OF 1

LOCATION: N 5013000.9 ;E 363099.9

BORING DATE: October 30, 2018

DATUM: CGVD28

SAMPLER HAMMER, 64kg; DROP, 760mm

PENETRATION TEST HAMMER, 64kg; DROP, 760mm

DEPTH SCALE METRES	BORING METHOD	SOIL PROFILE: DESCRIPTION	STRATA PLOT	ELEV. / DEPTH (m)	SAMPLES: NUMBER	TYPE	BLOWS/0.30m	ADDITIONAL LAB. TESTING	PIEZOMETER OR STANDPIPE INSTALLATION
		GROUND SURFACE		91.19					
0	Power Auger, 200 mm Diam. (Hollow Stem)	TOPSOIL - (SM/ML) SILTY SAND to sandy SILT; dark brown		0.00 / 90.94					
		(ML/SM) SILTY SAND to sandy SILT; grey brown; non-cohesive, moist to wet, loose		0.25 / 90.43	1	SS	6		Bentonite Seal
1		(CI/CH) SILTY CLAY to CLAY, trace sand; grey brown, contains silty sand seams(WEATHERED CRUST); cohesive, w>PL, stiff to very stiff		0.76 / 88.14	2	SS	3		Silica Sand
2					3	SS	1		38 mm Diam. PVC #10 Slot Screen
3		(CI/CH) SILTY CLAY to CLAY; grey with black organic mottling; cohesive, w>PL, firm to soft		3.05 / 83.57	4	SS	PM		Silica Sand
4									
5					5	TP	WR	C	Cave
6					6	SS	PM		
7									
		End of Borehole		7.62					
8									WL in screen at Elev. 91.19 m on April 30, 2019
9									
10									

DYNAMIC PENETRATION RESISTANCE, BLOWS/0.3m: 20, 40, 60, 80

SHEAR STRENGTH Cu, kPa: nat V. + Q - ●; rem V. ⊕ U - ○; 20, 40, 60, 80

HYDRAULIC CONDUCTIVITY, k, cm/s: 10^{-8}, 10^{-6}, 10^{-4}, 10^{-2}

WATER CONTENT PERCENT: Wp ⊢—○W—⊣ Wl; 20, 40, 60, 80

DEPTH SCALE

1 : 50

GOLDER

LOGGED: RI

CHECKED:

PROJECT: 18108333-1000

RECORD OF BOREHOLE: 18-37

SHEET 1 OF 1

LOCATION: N 5013045.5 ;E 363220.1

BORING DATE: October 30, 2018

DATUM: CGVD28

SAMPLER HAMMER, 64kg; DROP, 760mm

PENETRATION TEST HAMMER, 64kg; DROP, 760mm

DEPTH SCALE METRES	BORING METHOD	SOIL PROFILE: DESCRIPTION	STRATA PLOT	ELEV. / DEPTH (m)	SAMPLES: NUMBER	TYPE	BLOWS/0.30m	ADDITIONAL LAB. TESTING	PIEZOMETER OR STANDPIPE INSTALLATION
		GROUND SURFACE		91.29					
0	Power Auger, 200 mm Diam. (Hollow Stem)	TOPSOIL - (SM/ML) SILTY SAND to sandy SILT; dark brown		0.00 / 91.04					
		(SM/ML) SILTY SAND to sandy SILT; grey brown; non-cohesive, moist, loose		0.25 / 90.39	1	SS	7		Bentonite Seal
1		(CI/CH) SILTY CLAY to CLAY, trace to some sand; grey brown, contains silty sand seams (WEATHERED CRUST); cohesive, w>PL, very stiff to stiff		0.90 / 88.24	2	SS	8	MH	Silica Sand
					3	SS	3		
2									38 mm Diam. PVC #10 Slot Screen
3		(CI/CH) SILTY CLAY to CLAY; grey with black organic mottling, contains silty sand seams; cohesive, w>PL, firm		3.05 / 83.67	4	SS	WH		
4									
5					5	SS	PM		Cave
6					6	SS	WR		
7									
		End of Borehole		7.62					
8									WL in screen at Elev. 90.83 m on April 30, 2019
9									
10									

DYNAMIC PENETRATION RESISTANCE, BLOWS/0.3m: 20, 40, 60, 80

SHEAR STRENGTH Cu, kPa: nat V. + Q - ●; rem V. ⊕ U - ○; 20, 40, 60, 80

HYDRAULIC CONDUCTIVITY, k, cm/s: 10^{-8}, 10^{-6}, 10^{-4}, 10^{-2}

WATER CONTENT PERCENT: Wp ⊢—○ W —⊣ Wl; 20, 40, 60, 80

DEPTH SCALE

1 : 50

GOLDER

LOGGED: RI

CHECKED:

The Golder Associates Ltd. Soil Classification System is based on the Unified Soil Classification System (USCS)

Organic or Inorganic	Soil Group	Type of Soil		Gradation or Plasticity	$Cu = \frac{D_{60}}{D_{10}}$	$Cc = \frac{(D_{30})^2}{D_{10} x D_{60}}$	Organic Content	USCS Group Symbol	Group Name
INORGANIC (Organic Content ≤30% by mass)	COARSE-GRAINED SOILS (>50% by mass is larger than 0.075 mm)	GRAVELS (>50% by mass of coarse fraction is larger than 4.75 mm)	Gravels with ≤12% fines (by mass)	Poorly Graded	<4	≤1 or ≥3	≤30%	GP	GRAVEL
				Well Graded	≥4	1 to 3		GW	GRAVEL
			Gravels with >12% fines (by mass)	Below A Line	n/a			GM	SILTY GRAVEL
				Above A Line	n/a			GC	CLAYEY GRAVEL
		SANDS (≥50% by mass of coarse fraction is smaller than 4.75 mm)	Sands with ≤12% fines (by mass)	Poorly Graded	<6	≤1 or ≥3		SP	SAND
				Well Graded	≥6	1 to 3		SW	SAND
			Sands with >12% fines (by mass)	Below A Line	n/a			SM	SILTY SAND
				Above A Line	n/a			SC	CLAYEY SAND

Organic or Inorganic	Soil Group	Type of Soil	Laboratory Tests	Field Indicators: Dilatancy	Dry Strength	Shine Test	Thread Diameter	Toughness (of 3 mm thread)	Organic Content	USCS Group Symbol	Primary Name
INORGANIC (Organic Content ≤30% by mass)	FINE-GRAINED SOILS (≥50% by mass is smaller than 0.075 mm)	SILTS (Non-Plastic or PI and LL plot below A-Line on Plasticity Chart below)	Liquid Limit <50	Rapid	None	None	>6 mm	N/A (can't roll 3 mm thread)	<5%	ML	SILT
				Slow	None to Low	Dull	3mm to 6 mm	None to low	<5%	ML	CLAYEY SILT
				Slow to very slow	Low to medium	Dull to slight	3mm to 6 mm	Low	5% to 30%	OL	ORGANIC SILT
			Liquid Limit ≥50	Slow to very slow	Low to medium	Slight	3mm to 6 mm	Low to medium	<5%	MH	CLAYEY SILT
				None	Medium to high	Dull to slight	1 mm to 3 mm	Medium to high	5% to 30%	OH	ORGANIC SILT
		CLAYS (PI and LL plot above A-Line on Plasticity Chart below)	Liquid Limit <30	None	Low to medium	Slight to shiny	~ 3 mm	Low to medium	0% to 30% (see Note 2)	CL	SILTY CLAY
			Liquid Limit 30 to 50	None	Medium to high	Slight to shiny	1 mm to 3 mm	Medium		CI	SILTY CLAY
			Liquid Limit ≥50	None	High	Shiny	<1 mm	High		CH	CLAY
HIGHLY ORGANIC SOILS (Organic Content >30% by mass)		Peat and mineral soil mixtures							30% to 75%	PT	SILTY PEAT, SANDY PEAT
		Predominantly peat, may contain some mineral soil, fibrous or amorphous peat							75% to 100%		PEAT

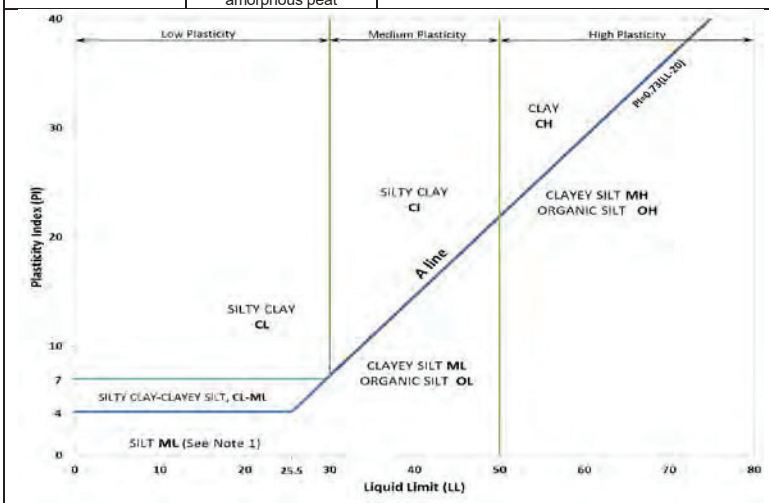

Note 1 – Fine grained materials with PI and LL that plot in this area are named (ML) SILT with slight plasticity. Fine-grained materials which are non-plastic (i.e. a PL cannot be measured) are named SILT.
Note 2 – For soils with <5% organic content, include the descriptor "trace organics" for soils with between 5% and 30% organic content include the prefix "organic" before the Primary name.

Dual Symbol — A dual symbol is two symbols separated by a hyphen, for example, GP-GM, SW-SC and CL-ML.
For non-cohesive soils, the dual symbols must be used when the soil has between 5% and 12% fines (i.e. to identify transitional material between "clean" and "dirty" sand or gravel.
For cohesive soils, the dual symbol must be used when the liquid limit and plasticity index values plot in the CL-ML area of the plasticity chart (see Plasticity Chart at left).

Borderline Symbol — A borderline symbol is two symbols separated by a slash, for example, CL/CI, GM/SM, CL/ML.
A borderline symbol should be used to indicate that the soil has been identified as having properties that are on the transition between similar materials. In addition, a borderline symbol may be used to indicate a range of similar soil types within a stratum.

ABBREVIATIONS AND TERMS USED ON RECORDS OF BOREHOLES AND TEST PITS

PARTICLE SIZES OF CONSTITUENTS

Soil Constituent	Particle Size Description	Millimetres	Inches (US Std. Sieve Size)
BOULDERS	Not Applicable	>300	>12
COBBLES	Not Applicable	75 to 300	3 to 12
GRAVEL	Coarse Fine	19 to 75 4.75 to 19	0.75 to 3 (4) to 0.75
SAND	Coarse Medium Fine	2.00 to 4.75 0.425 to 2.00 0.075 to 0.425	(10) to (4) (40) to (10) (200) to (40)
SILT/CLAY	Classified by plasticity	<0.075	< (200)

MODIFIERS FOR SECONDARY AND MINOR CONSTITUENTS

Percentage by Mass	Modifier
>35	Use 'and' to combine major constituents (*i.e.,* SAND and GRAVEL)
> 12 to 35	Primary soil name prefixed with "gravelly, sandy, SILTY, CLAYEY" as applicable
> 5 to 12	some
≤ 5	trace

PENETRATION RESISTANCE

Standard Penetration Resistance (SPT), N:

The number of blows by a 63.5 kg (140 lb) hammer dropped 760 mm (30 in.) required to drive a 50 mm (2 in.) split-spoon sampler for a distance of 300 mm (12 in.). Values reported are as recorded in the field and are uncorrected.

Cone Penetration Test (CPT)

An electronic cone penetrometer with a 60° conical tip and a project end area of 10 cm^2 pushed through ground at a penetration rate of 2 cm/s. Measurements of tip resistance (q_t), porewater pressure (u) and sleeve frictions are recorded electronically at 25 mm penetration intervals.

Dynamic Cone Penetration Resistance (DCPT); N_d:

The number of blows by a 63.5 kg (140 lb) hammer dropped 760 mm (30 in.) to drive uncased a 50 mm (2 in.) diameter, 60° cone attached to "A" size drill rods for a distance of 300 mm (12 in.).

PH: Sampler advanced by hydraulic pressure
PM: Sampler advanced by manual pressure
WH: Sampler advanced by static weight of hammer
WR: Sampler advanced by weight of sampler and rod

SAMPLES

AS	Auger sample
BS	Block sample
CS	Chunk sample
DD	Diamond Drilling
DO or DP	Seamless open ended, driven or pushed tube sampler – note size
DS	Denison type sample
GS	Grab Sample
MC	Modified California Samples
MS	Modified Shelby (for frozen soil)
RC	Rock core
SC	Soil core
SS	Split spoon sampler – note size
ST	Slotted tube
TO	Thin-walled, open – note size (Shelby tube)
TP	Thin-walled, piston – note size (Shelby tube)
WS	Wash sample

SOIL TESTS

w	water content
PL , w_p	plastic limit
LL , w_L	liquid limit
C	consolidation (oedometer) test
CHEM	chemical analysis (refer to text)
CID	consolidated isotropically drained triaxial test[1]
CIU	consolidated isotropically undrained triaxial test with porewater pressure measurement[1]
D_R	relative density (specific gravity, Gs)
DS	direct shear test
GS	specific gravity
M	sieve analysis for particle size
MH	combined sieve and hydrometer (H) analysis
MPC	Modified Proctor compaction test
SPC	Standard Proctor compaction test
OC	organic content test
SO_4	concentration of water-soluble sulphates
UC	unconfined compression test
UU	unconsolidated undrained triaxial test
V (FV)	field vane (LV-laboratory vane test)
γ	unit weight

1. Tests anisotropically consolidated prior to shear are shown as CAD, CAU.

NON-COHESIVE (COHESIONLESS) SOILS

Compactness[2]

Term	SPT 'N' (blows/0.3m)[1]
Very Loose	0 to 4
Loose	4 to 10
Compact	10 to 30
Dense	30 to 50
Very Dense	>50

1. SPT 'N' in accordance with ASTM D1586, uncorrected for the effects of overburden pressure.
2. Definition of compactness terms are based on SPT 'N' ranges as provided in Terzaghi, Peck and Mesri (1996). Many factors affect the recorded SPT 'N' value, including hammer efficiency (which may be greater than 60% in automatic trip hammers), overburden pressure, groundwater conditions, and grainsize. As such, the recorded SPT 'N' value(s) should be considered only an approximate guide to the soil compactness. These factors need to be considered when evaluating the results, and the stated compactness terms should not be relied upon for design or construction.

Field Moisture Condition

Term	Description
Dry	Soil flows freely through fingers.
Moist	Soils are darker than in the dry condition and may feel cool.
Wet	As moist, but with free water forming on hands when handled.

COHESIVE SOILS

Consistency

Term	Undrained Shear Strength (kPa)	SPT 'N'[1,2] (blows/0.3m)
Very Soft	<12	0 to 2
Soft	12 to 25	2 to 4
Firm	25 to 50	4 to 8
Stiff	50 to 100	8 to 15
Very Stiff	100 to 200	15 to 30
Hard	>200	>30

1. SPT 'N' in accordance with ASTM D1586, uncorrected for overburden pressure effects; approximate only.
2. SPT 'N' values should be considered ONLY an approximate guide to consistency; for sensitive clays (e.g., Champlain Sea clays), the N-value approximation for consistency terms does NOT apply. Rely on direct measurement of undrained shear strength or other manual observations.

Water Content

Term	Description
w < PL	Material is estimated to be drier than the Plastic Limit.
w ~ PL	Material is estimated to be close to the Plastic Limit.
w > PL	Material is estimated to be wetter than the Plastic Limit.

Unless otherwise stated, the symbols employed in the report are as follows:

I. GENERAL

π	3.1416
ln x	natural logarithm of x
$\log_{10}$	x or log x, logarithm of x to base 10
g	acceleration due to gravity
t	time

II. STRESS AND STRAIN

γ	shear strain
Δ	change in, e.g. in stress: $\Delta\sigma$
ε	linear strain
ε_v	volumetric strain
η	coefficient of viscosity
υ	Poisson's ratio
σ	total stress
σ'	effective stress ($\sigma' = \sigma - u$)
σ'_{vo}	initial effective overburden stress
$\sigma_1, \sigma_2, \sigma_3$	principal stress (major, intermediate, minor)
σ_{oct}	mean stress or octahedral stress $= (\sigma_1 + \sigma_2 + \sigma_3)/3$
τ	shear stress
u	porewater pressure
E	modulus of deformation
G	shear modulus of deformation
K	bulk modulus of compressibility

III. SOIL PROPERTIES

(a) Index Properties

$\rho(\gamma)$	bulk density (bulk unit weight)*
$\rho_d(\gamma_d)$	dry density (dry unit weight)
$\rho_w(\gamma_w)$	density (unit weight) of water
$\rho_s(\gamma_s)$	density (unit weight) of solid particles
γ'	unit weight of submerged soil ($\gamma' = \gamma - \gamma_w$)
D_R	relative density (specific gravity) of solid particles ($D_R = \rho_s / \rho_w$) (formerly G_s)
e	void ratio
n	porosity
S	degree of saturation

* Density symbol is ρ. Unit weight symbol is γ where $\gamma = \rho g$ (i.e. mass density multiplied by acceleration due to gravity)

(a) Index Properties (continued)

w	water content
w_l or LL	liquid limit
w_p or PL	plastic limit
I_p or PI	plasticity index = $(w_l - w_p)$
NP	non-plastic
w_s	shrinkage limit
I_L	liquidity index = $(w - w_p) / I_p$
I_C	consistency index = $(w_l - w) / I_p$
e_{max}	void ratio in loosest state
e_{min}	void ratio in densest state
I_D	density index = $(e_{max} - e) / (e_{max} - e_{min})$ (formerly relative density)

(b) Hydraulic Properties

h	hydraulic head or potential
q	rate of flow
v	velocity of flow
i	hydraulic gradient
k	hydraulic conductivity (coefficient of permeability)
j	seepage force per unit volume

(c) Consolidation (one-dimensional)

C_c	compression index (normally consolidated range)
C_r	recompression index (over-consolidated range)
C_s	swelling index
C_α	secondary compression index
m_v	coefficient of volume change
c_v	coefficient of consolidation (vertical direction)
c_h	coefficient of consolidation (horizontal direction)
T_v	time factor (vertical direction)
U	degree of consolidation
σ'_p	pre-consolidation stress
OCR	over-consolidation ratio = σ'_p / σ'_{vo}

(d) Shear Strength

τ_p, τ_r	peak and residual shear strength
ϕ'	effective angle of internal friction
δ	angle of interface friction
μ	coefficient of friction = tan δ
c'	effective cohesion
c_u, s_u	undrained shear strength ($\phi = 0$ analysis)
p	mean total stress $(\sigma_1 + \sigma_3)/2$
p'	mean effective stress $(\sigma'_1 + \sigma'_3)/2$
q	$(\sigma_1 - \sigma_3)/2$ or $(\sigma'_1 - \sigma'_3)/2$
q_u	compressive strength $(\sigma_1 - \sigma_3)$
S_t	sensitivity

Notes: 1 $\tau = c' + \sigma' \tan \phi'$

2 shear strength = (compressive strength)/2

TECHNICAL MEMORANDUM

DATE July 16, 2018 **Project No.** 18100364/2000

TO Andrew Finnson, CAIVAN Communities

CC

FROM Stephane Sol, Christopher Phillips **EMAIL** ssol@golder.com; cphillips@golder.com

NBCC SEISMIC SITE CLASS TESTING RESULTS
BORRISOKANE RD, OTTAWA, ONTARIO

This technical memorandum presents the results of four Multichannel Analysis of Surface Waves (MASW) tests performed for the National Building Code of Canada (NBCC 2015). The seismic testing was carried out near Cedarview Rd/Borrisokane Rd in Ottawa, Ontario and location of each MASW line is shown on Figure 1. The geophysical testing was performed by Golder Associates Ltd. (Golder) personnel on May 16 and 17 and June 26, 2018.

Figure 1: MASW Location Site Map (MASW Lines in red)

Methodology

The MASW method measures variations in surface-wave velocity with increasing distance and wavelength and can be used to infer the rock/soil types, stratigraphy and soil conditions.

A typical MASW survey requires a seismic source, to generate surface waves, and a minimum of two geophone receivers, to measure the ground response at some distance from the source. Surface waves are a special type of seismic wave whose propagation is confined to the near surface medium.

The depth of penetration of a surface wave into a medium is directly proportional to its wavelength. In a non-homogeneous medium, surface waves are dispersive, i.e., each wavelength has a characteristic velocity owing to the subsurface heterogeneities within the depth interval that particular wavelength of surface wave propagates through. The relationship between surface-wave velocity and wavelength is used to obtain the shear-wave velocity and attenuation profile of the medium with increasing depth.

The seismic source used can be either active or passive, depending on the application and location of the survey. Examples of active sources include explosives, weight-drops, sledge hammer and vibrating pads. Examples of passive sources are road traffic, micro-tremors, and water-wave action (in near-shore environments).

The geophone receivers measure the wave-train associated with the surface wave travelling from a seismic source at different distances from the source.

The participation of surface waves with different wavelengths can be determined from the wave-train by transforming the wave-train results into the frequency domain. The surface-wave velocity profile with respect to wavelength (called the ‘dispersion curve’) is determined by the delay in wave propagation measured between the geophone receivers. The dispersion curve is then matched to a theoretical dispersion curve using an iterative forward-modelling procedure. The result is a shear-wave velocity profile of the tested medium with depth, which can be used to estimate the dynamic shear-modulus of the medium as a function of depth.

Field Work

The MASW field work was conducted on May 16 and 17 and June 26, 2018, by personnel from the Golder Mississauga and Ottawa office. For the three MASW lines, a series of 24 low frequency (4.5 Hz) geophones were laid out at 3 metre intervals. Both active and passive readings were recorded along the MASW line. For the active investigation, a seismic drop of 45 kg and a 9.9 kg sledge hammer were used as seismic sources. Active seismic records were collected with seismic sources located 5, 10, and 15 metres from and collinear to the geophone array. Examples of active seismic record collected along each MASW line are shown on Figures 2, 3, 4, and 5 below.

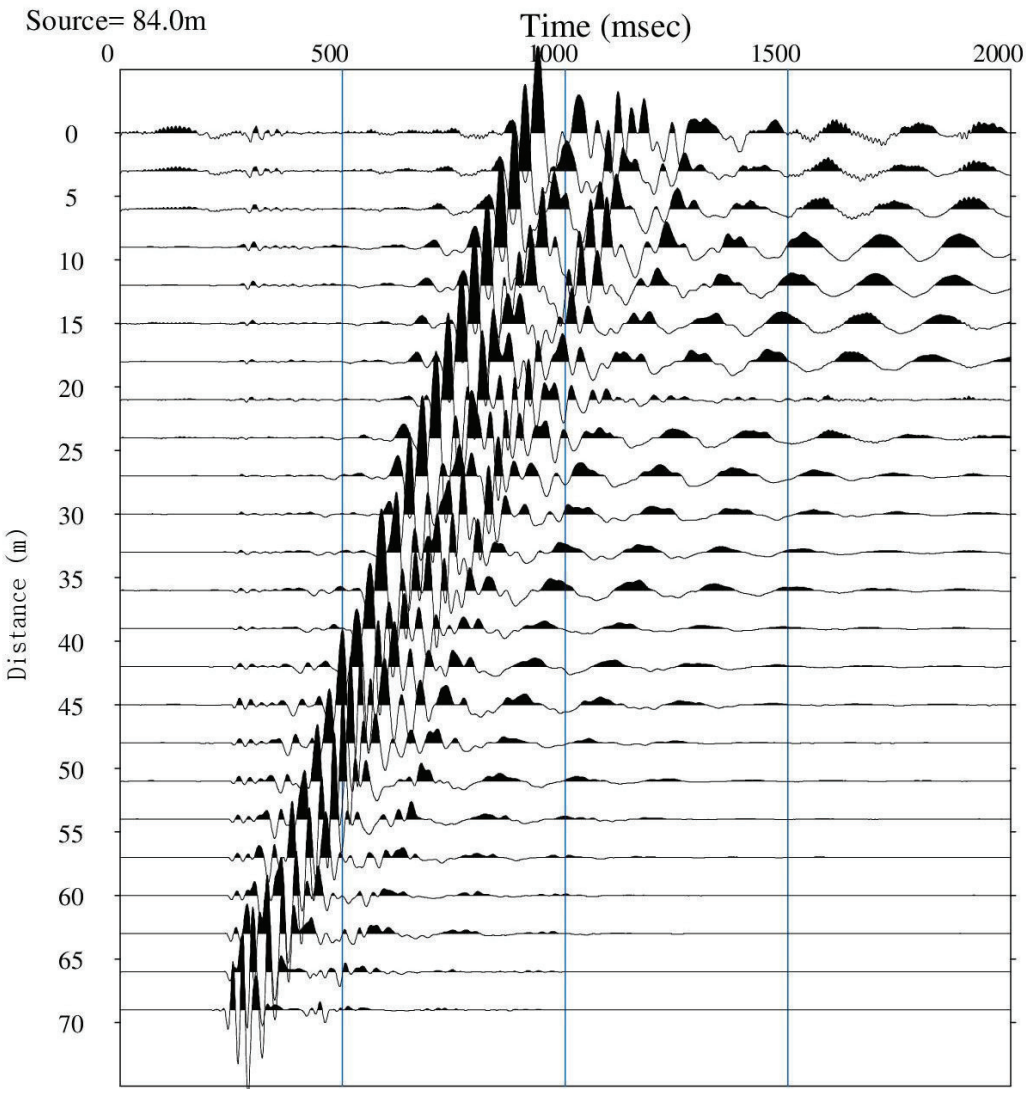

Figure 2: Typical seismic record collected at the site of the MASW Line 1.

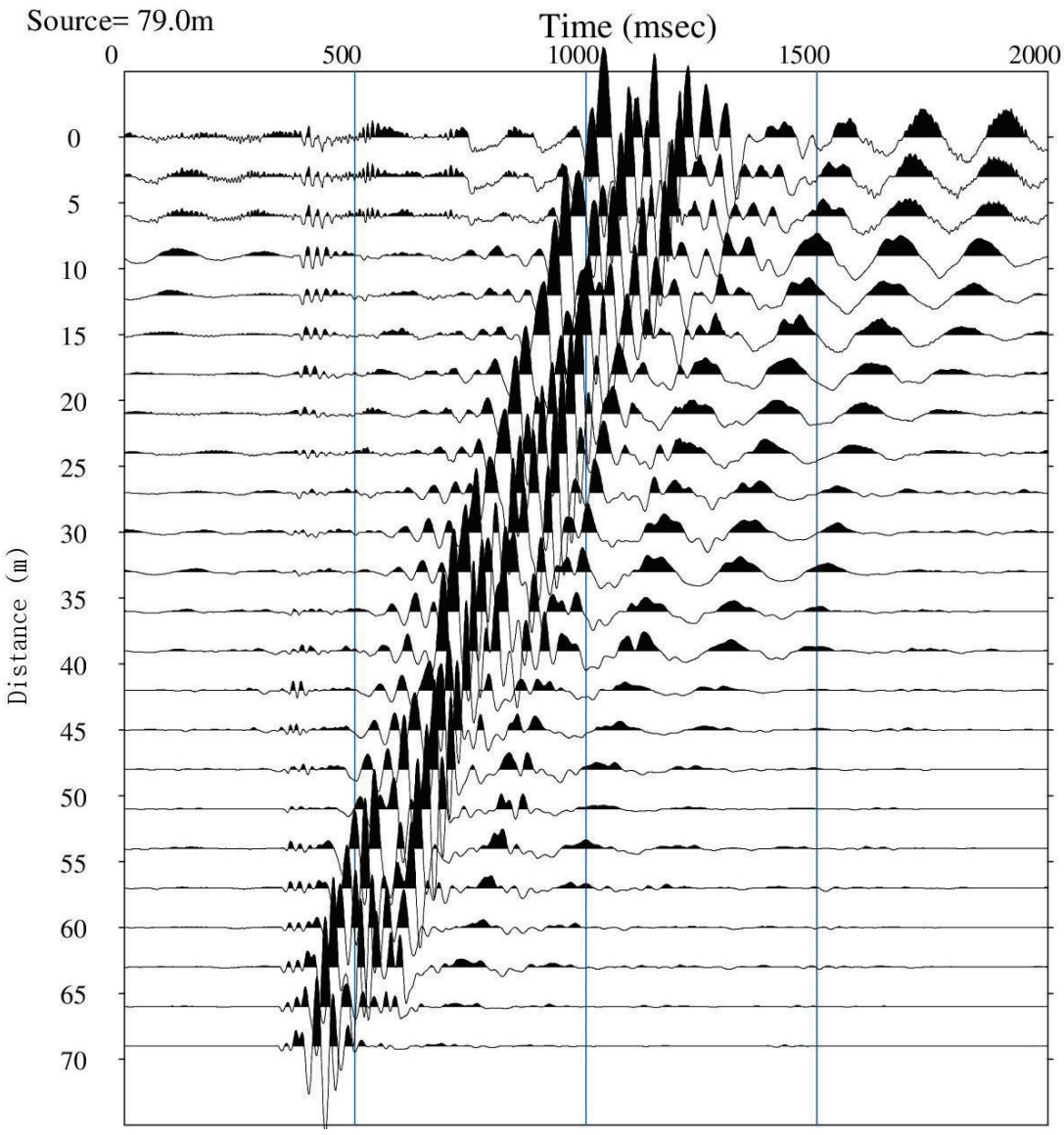

Figure 3: Typical seismic record collected at the site of the MASW Line 2.

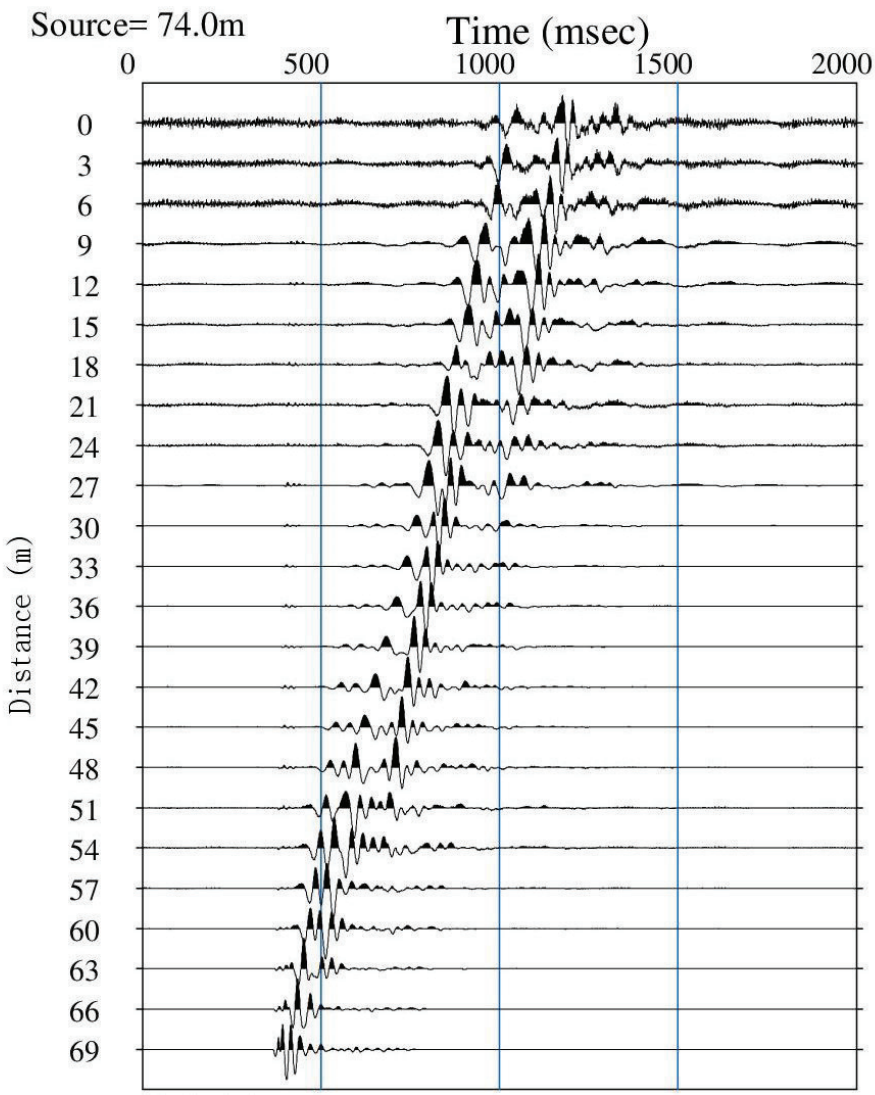

Figure 4: Typical seismic record collected at the site of the MASW Line 3.

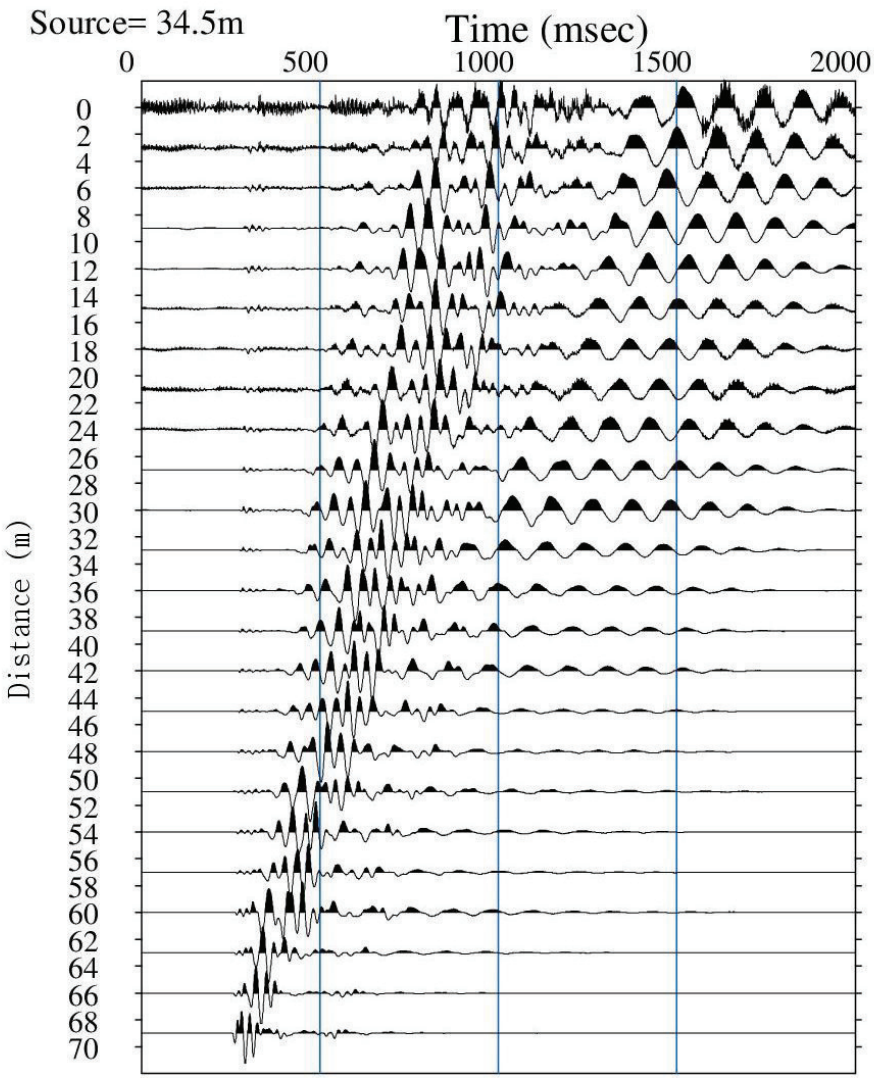

Figure 5: Typical seismic record collected at the site of the MASW Line 4.

Data Processing

Processing of the MASW test results consisted of the following main steps:

1) Transformation of the time domain data into the frequency domain using a Fast-Fourier Transform (FFT) for each source location;

2) Calculation of the phase for each frequency component;

3) Linear regression to calculate phase velocity for each frequency component;

4) Filtering of the calculated phase velocities based on the Pearson correlation coefficient (r2) between the data and the linear regression best fit line used to calculate phase velocity;

5) Generation of the dispersion curve by combining calculated phase velocities for each shot location of a single MASW test; and,

6) Generation of the stiffness profile, through forward iterative modelling and matching of model data to the field collected dispersion curve.

Processing of the MASW data was completed using the SeisImager/SW software package (Geometrics Inc.). The calculated phase velocities for a seismic shot point were combined and the dispersion curve generated by choosing the minimum phase velocity calculated for each frequency component as shown on Figures 6, 7, 8 and 9 for MASW Lines 1, 2, 3, and 4, respectively. Shear wave velocity profiles were generated through inverse modelling to best fit the calculated dispersion curves. The active survey of MASW Lines provided a dispersion curve with a suitable frequency range as summarized in Table 1, below.

Table 1: Summary of Dispersion Curves with Suitable Frequency Ranges

MASW Line	Minimum Frequency (Hz)	Maximum Frequency (Hz)
MASW Line 1	3	38
MASW Line 2	4	26
MASW Line 3	3	35
MASW Line 4	4	22

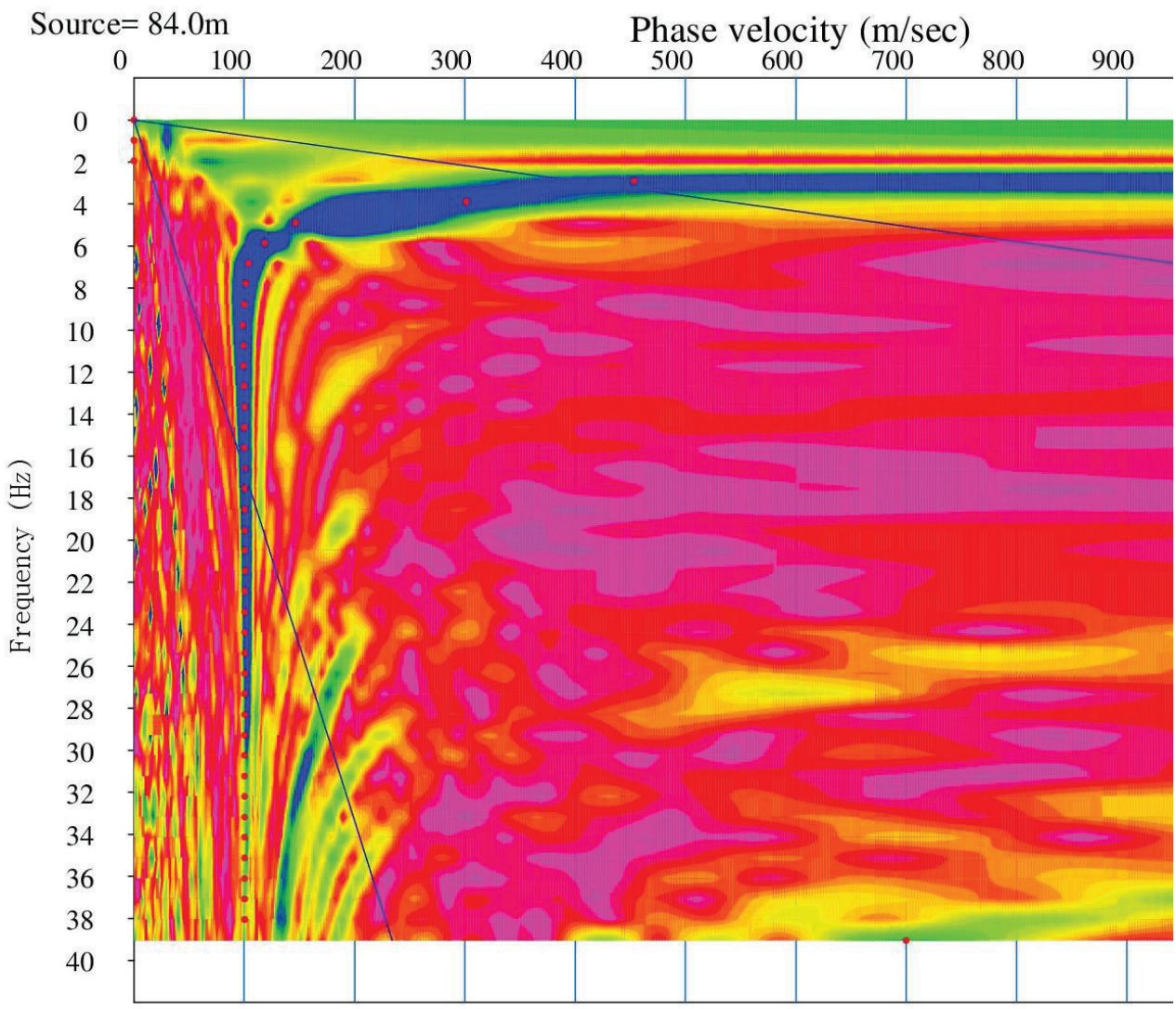

Figure 6: Active MASW Dispersion Curve Picks (red dots) along the MASW Line 1

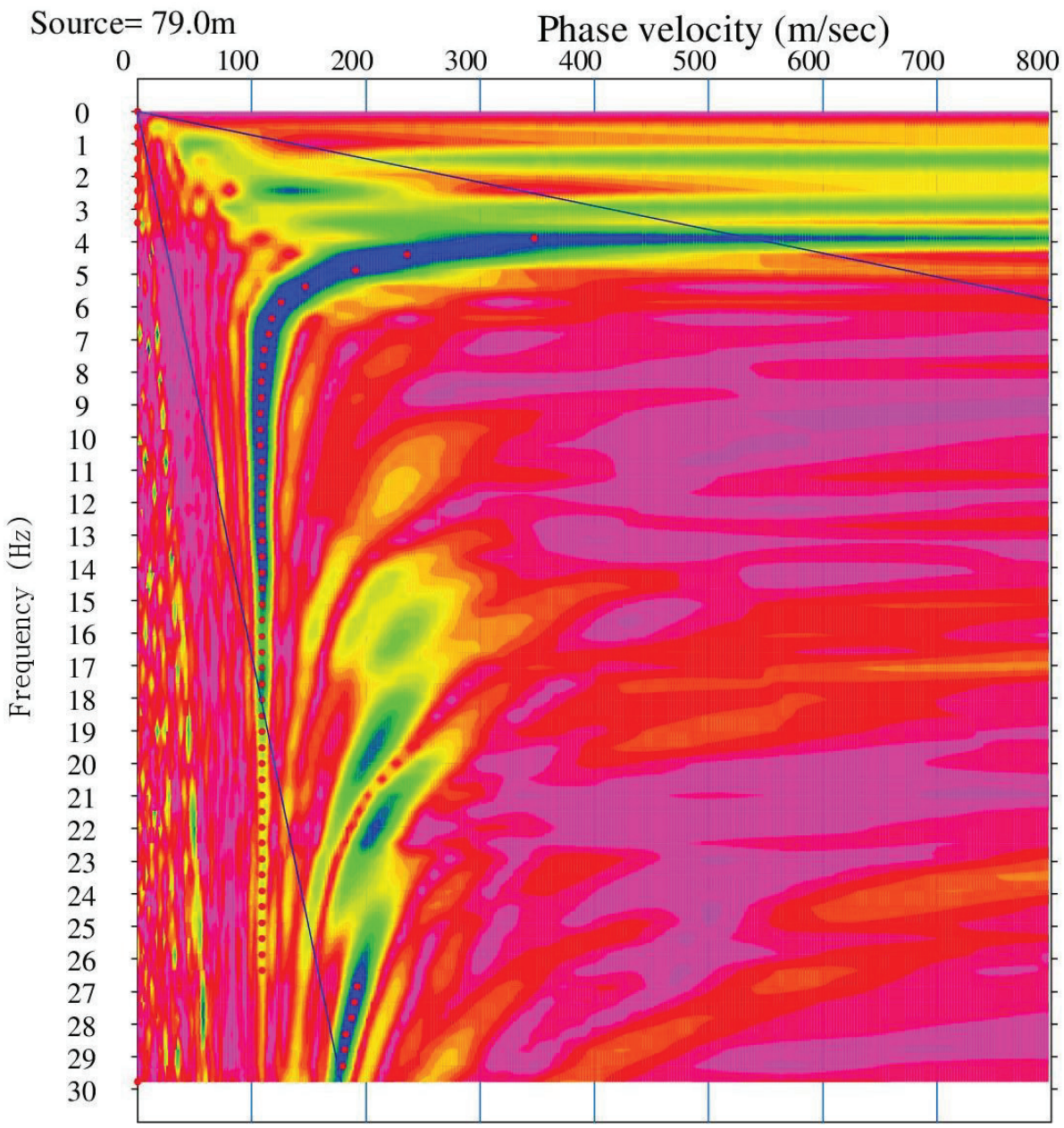

Figure 7: Active MASW Dispersion Curve Picks (red dots) along the MASW Line 2

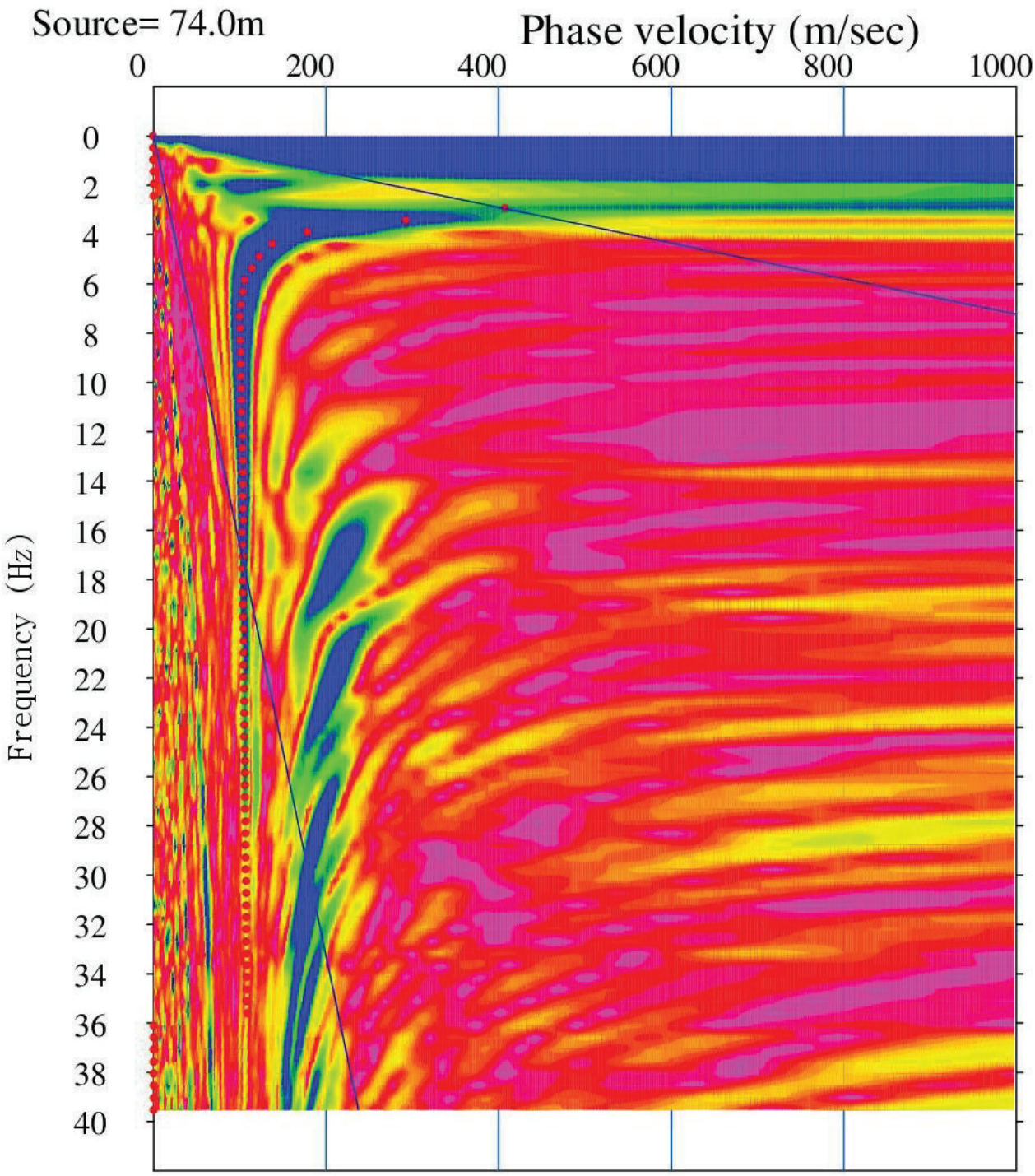

Figure 8: Active MASW Dispersion Curve Picks (red dots) along the MASW Line 3

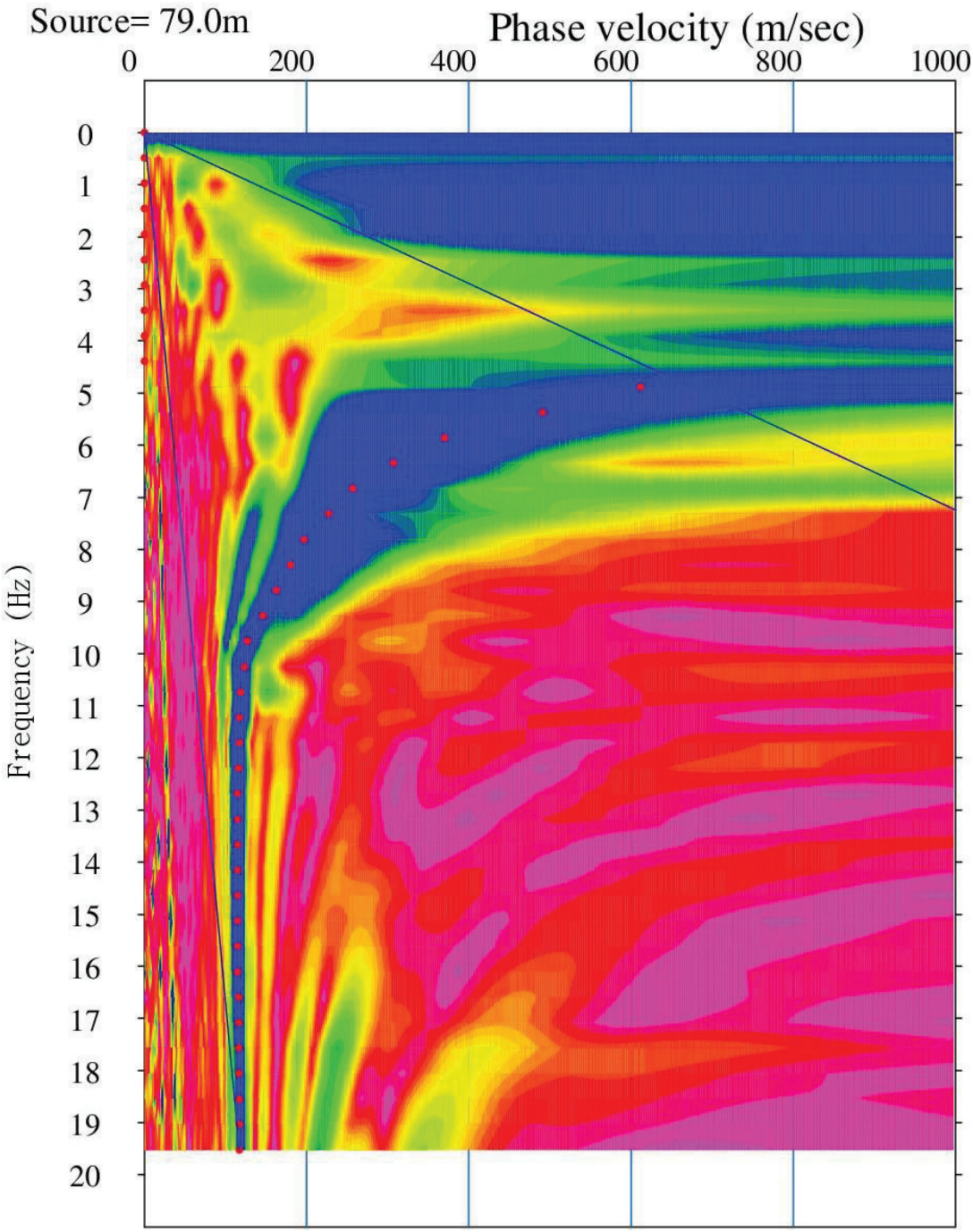

Figure 9: Active MASW Dispersion Curve Picks (red dots) along the MASW Line 4

Results

The MASW test results are presented in Figures 10, 11, 12, and 13 for MASW Lines 1, 2, 3, and 4, respectively. These results present the calculated shear wave velocity profiles derived from the field testing along each MASW line. The field collected dispersion curves are compared with the model generated dispersion curves on Figures 14, 15, 16 and 17 for MASW Lines 1, 2, 3, and 4, respectively. There is a satisfactory correlation between the field collected and model calculated dispersion curves, with a root mean squared error of less than 3% along each MASW line.

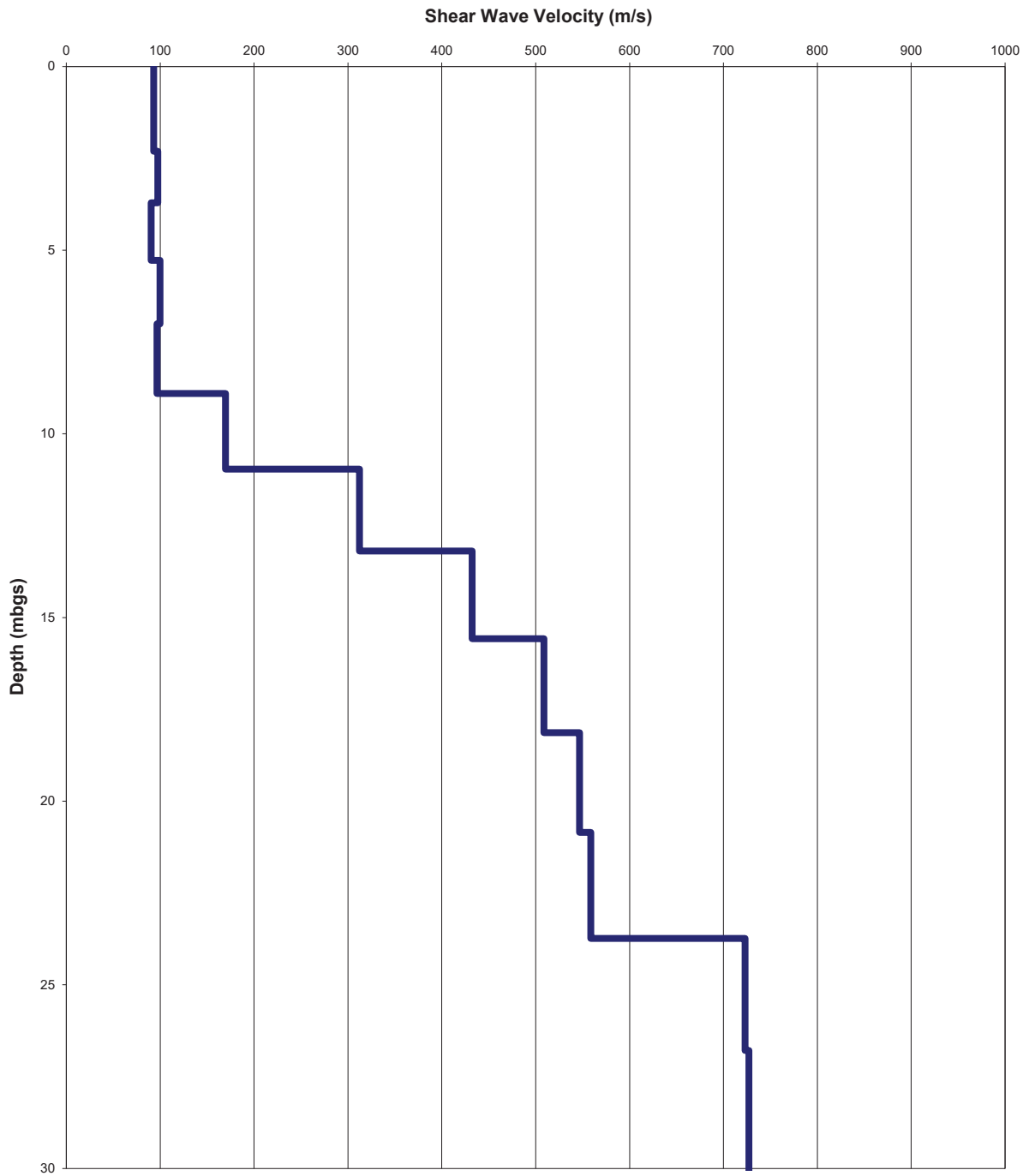

Figure 10: MASW Modelled Shear-Wave Velocity Depth profile along the MASW Line 1

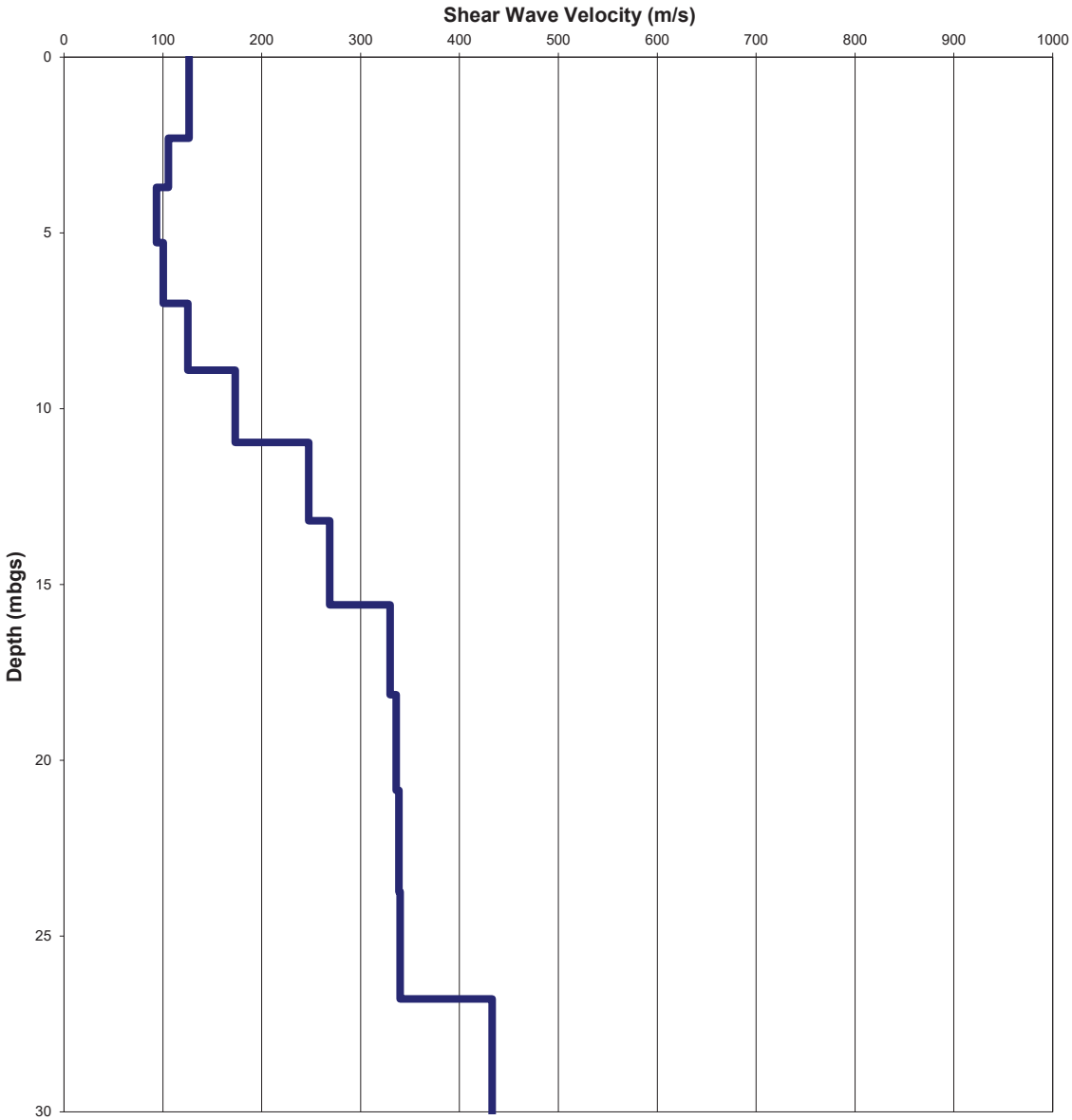

Figure 11: MASW Modelled Shear-Wave Velocity Depth profile along the MASW Line 2

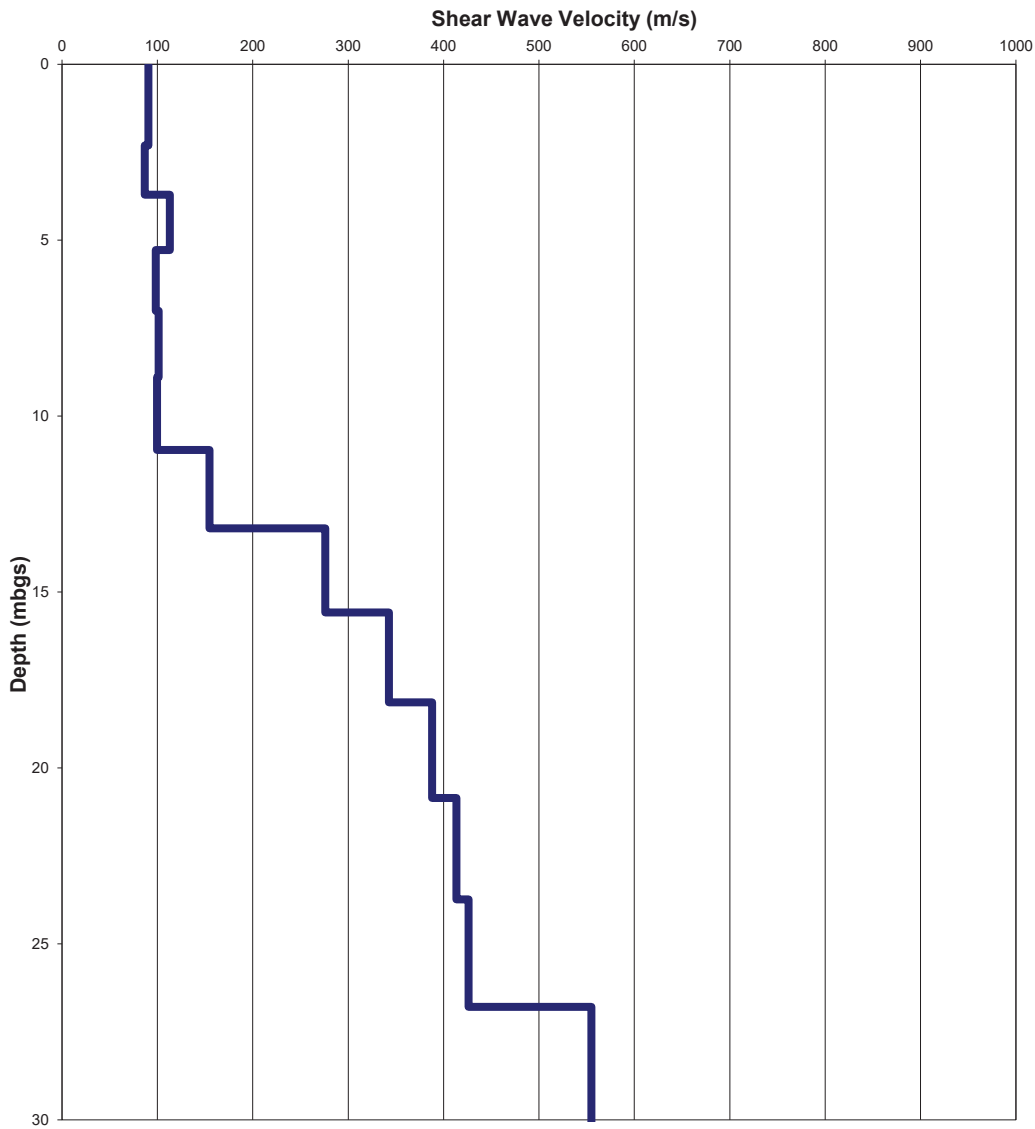

Figure 12: MASW Modelled Shear-Wave Velocity Depth profile along the MASW Line 3

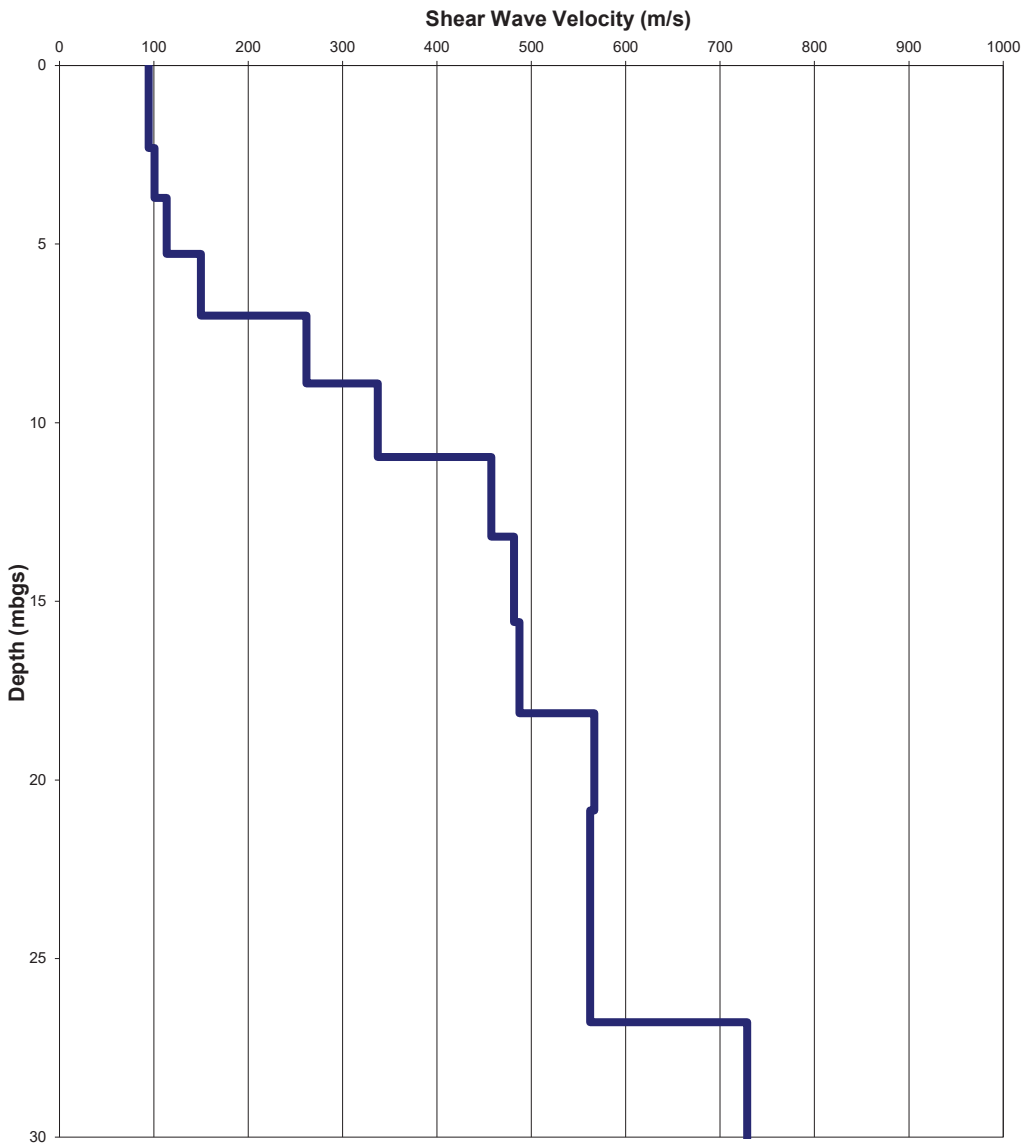

Figure 13: MASW Modelled Shear-Wave Velocity Depth profile along the MASW Line 4

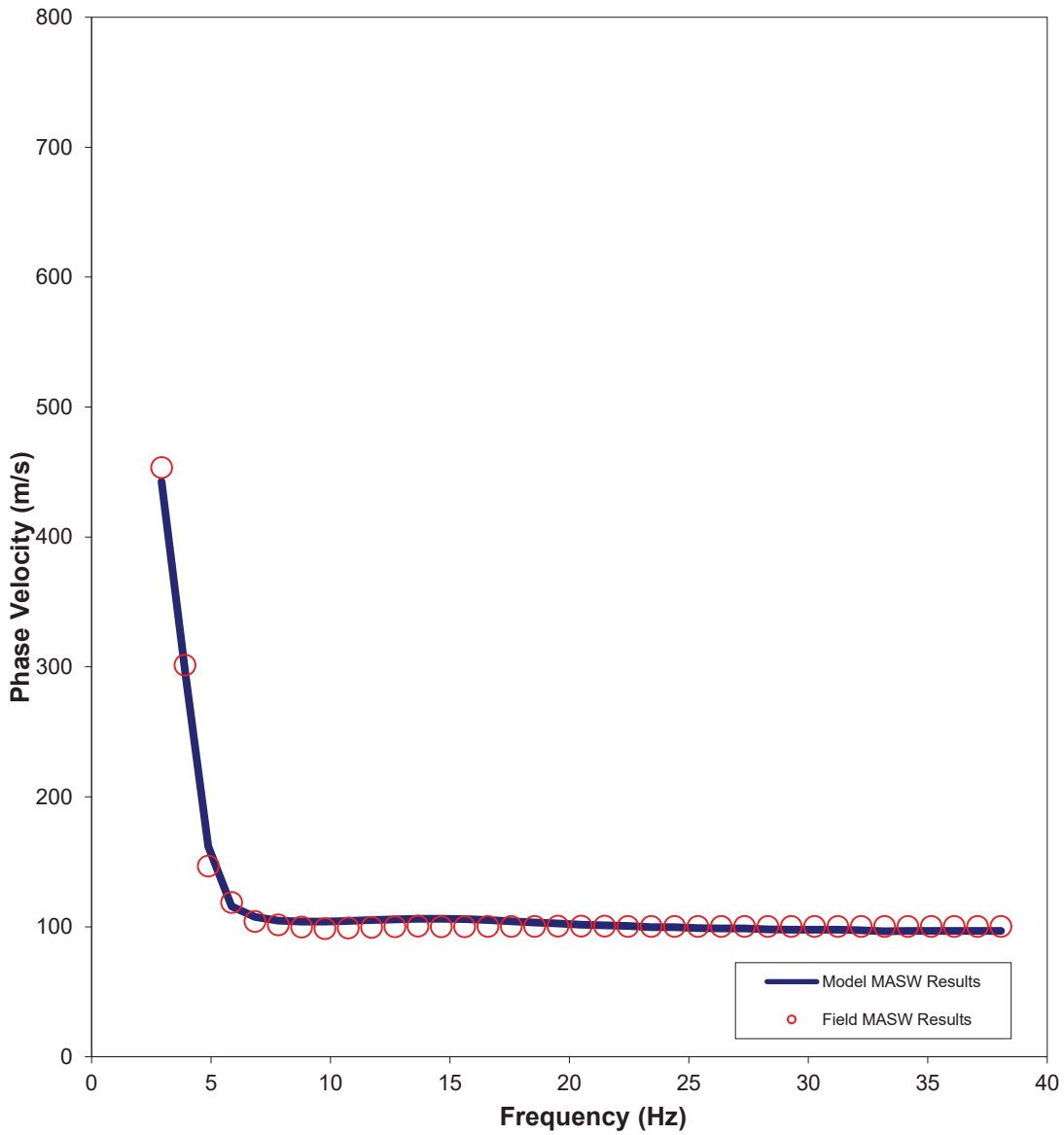

Figure 14: Comparison of Field (red dots) vs. Modelled Data (blue line) along the MASW Line 1

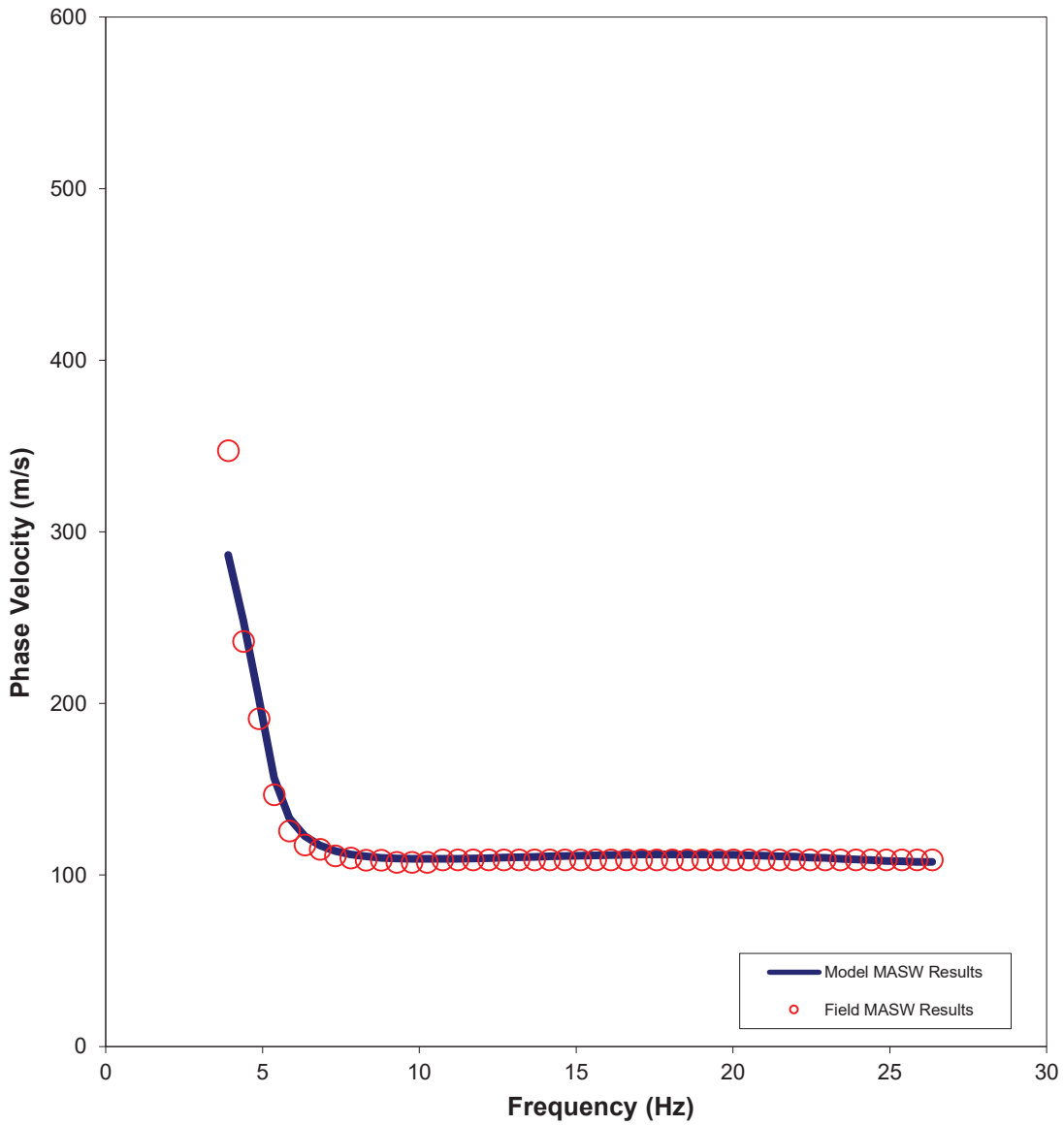

Figure 15: Comparison of Field (red dots) vs. Modelled Data (blue line) along the MASW Line 2

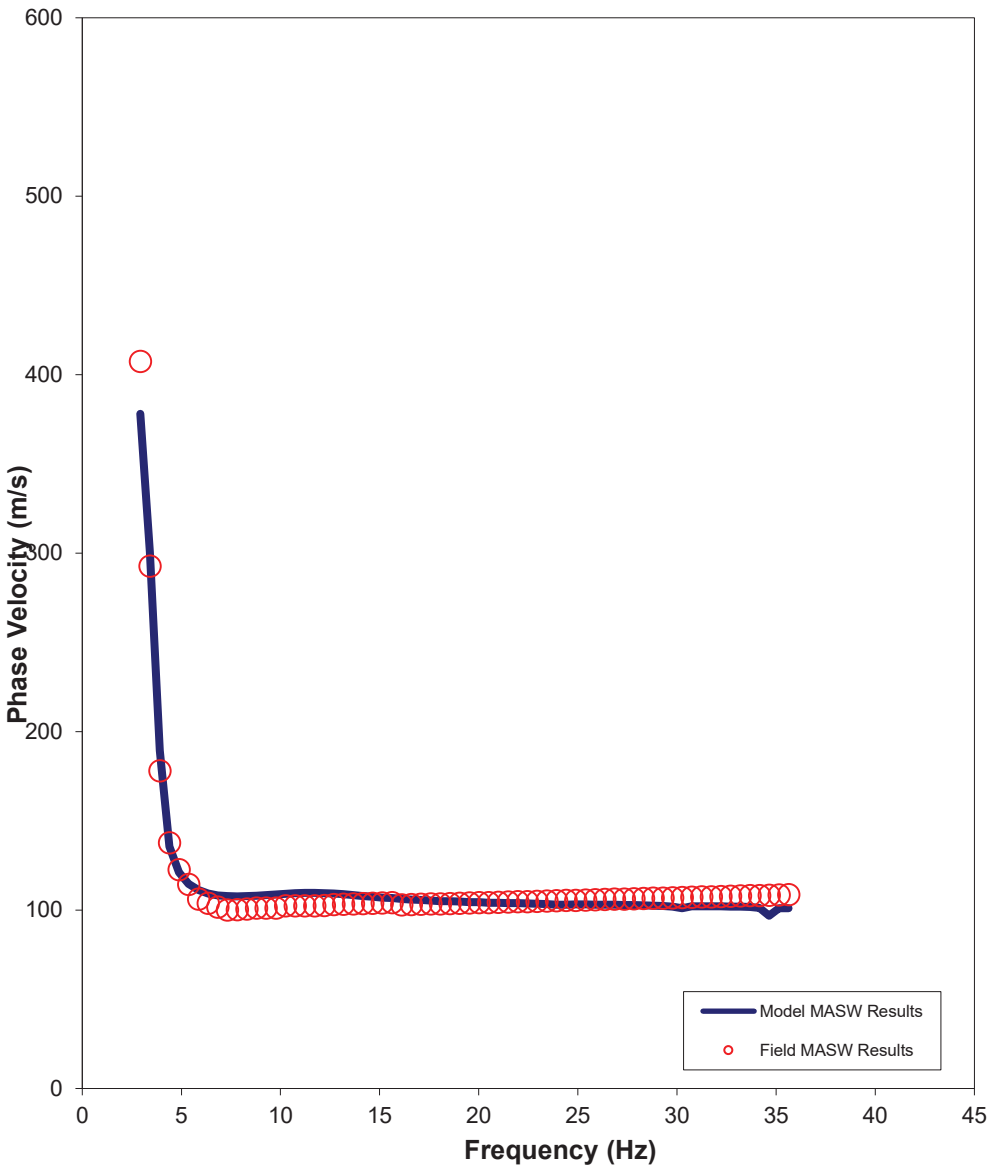

Figure 16: Comparison of Field (red dots) vs. Modelled Data (blue line) along the MASW Line 3

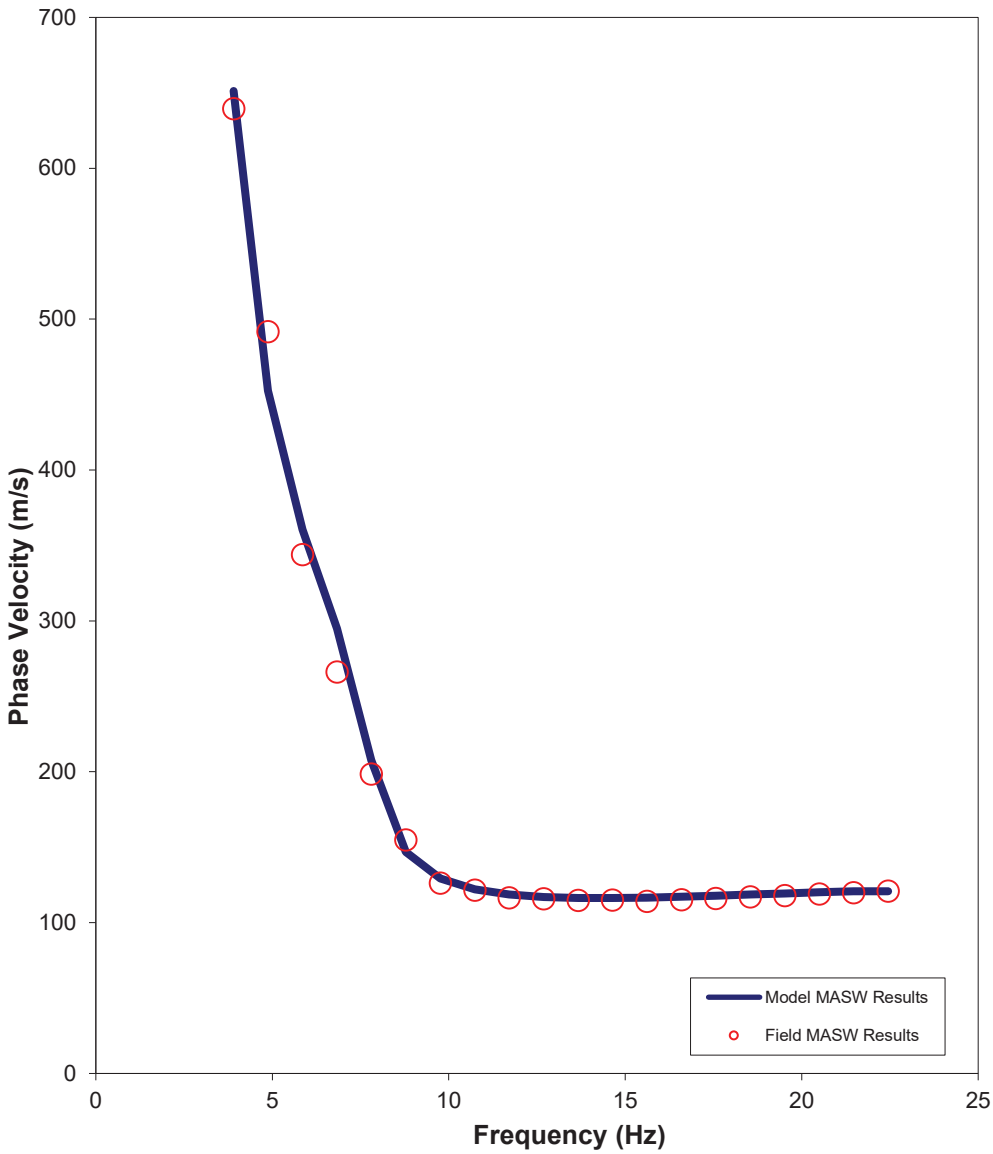

Figure 17: Comparison of Field (red dots) vs. Modelled Data (blue line) along the MASW Line 4

To calculate the average shear-wave velocity as required by the National Building Code of Canada (NBCC 2015), the results were modelled to 30 metres below ground surface. The average shear-wave velocity along MASW Line 1 was found to be 211 m/s (Table 2). The average shear-wave velocity along MASW Line 2 was found to be 198 m/s (Table 3). The average shear-wave velocity along MASW Line 3 was found to be 176 m/s (Table 4). The average shear-wave velocity along MASW Line 4 was found to be 268 m/s (Table 5).

The NBCC 2015 requires special site specific evaluation if certain soil types are encountered on the site, so the site classification stated here should be reviewed, and modified if necessary, according to borehole stratigraphy, standard penetration resistance results, and undrained shear strength measurements, if available for this site.

Table 2: Shear-Wave Velocity Profile along the MASW line 1

Model Layer (mbgs)		Layer Thickness (m)	Shear Wave Velocity (m/s)	Shear Wave Travel Time Through Layer (s)
Top	Bottom			
0.00	1.07	1.07	93	0.011498
1.07	2.31	1.24	93	0.013267
2.31	3.71	1.40	98	0.014353
3.71	5.27	1.57	90	0.017329
5.27	7.01	1.73	100	0.017316
7.01	8.90	1.90	97	0.019599
8.90	10.96	2.06	170	0.012140
10.96	13.19	2.23	312	0.007123
13.19	15.58	2.39	432	0.005528
15.58	18.13	2.55	509	0.005023
18.13	20.85	2.72	547	0.004975
20.85	23.74	2.88	559	0.005163
23.74	26.79	3.05	723	0.004217
26.79	30.00	3.21	727	0.004420
			Vs Average to 30 mbgs (m/s)	**211**

Table 3: Shear-Wave Velocity Profile along the MASW line 2

Model Layer (mbgs)		Layer Thickness (m)	Shear Wave Velocity (m/s)	Shear Wave Travel Time Through Layer (s)
Top	Bottom			
0.00	1.07	1.07	126	0.008475
1.07	2.31	1.24	126	0.009779
2.31	3.71	1.40	106	0.013266
3.71	5.27	1.57	94	0.016742
5.27	7.01	1.73	100	0.017247
7.01	8.90	1.90	125	0.015147
8.90	10.96	2.06	173	0.011895
10.96	13.19	2.23	248	0.008989
13.19	15.58	2.39	269	0.008896
15.58	18.13	2.55	330	0.007747
18.13	20.85	2.72	336	0.008092
20.85	23.74	2.88	339	0.008512
23.74	26.79	3.05	340	0.008967
26.79	30.00	3.21	433	0.007423
			Vs Average to 30 mbgs (m/s)	**198**

Table 4: Shear-Wave Velocity Profile along the MASW line 3

Model Layer (mbgs)		Layer Thickness (m)	Shear Wave Velocity (m/s)	Shear Wave Travel Time Through Layer (s)
Top	Bottom			
0.00	1.07	1.07	91	0.011826
1.07	2.31	1.24	91	0.013646
2.31	3.71	1.40	87	0.016153
3.71	5.27	1.57	113	0.013867
5.27	7.01	1.73	98	0.017616
7.01	8.90	1.90	101	0.018731
8.90	10.96	2.06	100	0.020696
10.96	13.19	2.23	155	0.014399
13.19	15.58	2.39	276	0.008661
15.58	18.13	2.55	343	0.007453
18.13	20.85	2.72	388	0.007012
20.85	23.74	2.88	414	0.006976
23.74	26.79	3.05	426	0.007158
26.79	30.00	3.21	555	0.005790
			Vs Average to 30 mbgs (m/s)	**176**

Table 5: Shear-Wave Velocity Profile along the MASW line 4

Model Layer (mbgs)		Layer Thickness (m)	Shear Wave Velocity (m/s)	Shear Wave Travel Time Through Layer (s)
Top	Bottom			
0.00	1.07	1.07	94	0.011341
1.07	2.31	1.24	94	0.013085
2.31	3.71	1.40	101	0.013903
3.71	5.27	1.57	114	0.013779
5.27	7.01	1.73	150	0.011561
7.01	8.90	1.90	262	0.007243
8.90	10.96	2.06	337	0.006109
10.96	13.19	2.23	458	0.004864
13.19	15.58	2.39	481	0.004964
15.58	18.13	2.55	487	0.005242
18.13	20.85	2.72	567	0.004800
20.85	23.74	2.88	562	0.005131
23.74	26.79	3.05	562	0.005424
26.79	30.00	3.21	729	0.004411
			Vs Average to 30 mbgs (m/s)	**268**

Limitations

This technical memorandum is based on data and information collected by Golder Associates Ltd. and is based solely on the conditions of the properties at the time of the work, supplemented by historical information and data obtained by Golder Associates Ltd. as described in this memo.

Golder Associates Ltd. has relied in good faith on all information provided and does not accept responsibility for any deficiency, misstatements, or inaccuracies contained in the reports as a result of omissions, misinterpretation, or fraudulent acts of the persons contacted or errors or omissions in the reviewed documentation.

The services performed, as described in this memo, were conducted in a manner consistent with that level of care and skill normally exercised by other members of the engineering and science professions currently practicing under similar conditions, subject to the time limits and financial and physical constraints applicable to the services.

Any use which a third party makes of this memo, or any reliance on, or decisions to be made based on it, are the responsibilities of such third parties. Golder Associates Ltd. accepts no responsibility for damages, if any, suffered by any third party as a result of decisions made or actions based on this memo.

The findings and conclusions of this memo are valid only as of the date of this memo. If new information is discovered in future work, including excavations, borings, or other studies, Golder Associates Ltd. should be requested to re-evaluate the conclusions of this memo, and to provide amendments as required.

Closure

We trust that this technical memorandum meets your needs at the present time. If you have any questions or require clarification, please contact the undersigned at your convenience.

GOLDER ASSOCIATES LTD.

Stephane Sol, Ph.D., P. Geo.
Senior Geophysicist

Christopher Phillips, M.Sc., P. Geo.
Senior Geophysicist, Principal

SS/CRP/jl

c:\users\jrlee\desktop\general\18100364 borisokane rd_masw_july 2018.docx

GOLDER

TABLE 2 - SHRINKAGE LIMIT DETERMINATIONS

Borehole Number	18-20	
Sample Number	5	
Depth, m	3.05-3.66	
Shrinkage Dish Number	3	4
Mass of the dry soil pat, g	15.48	15.54
Mass of dry soil pat + shrinkage dish, g	37.08	38.81
Mass of shrinkage dish, g	21.60	23.27
Volume of shrinkage dish, cm^3	13.30	13.33
Mass of wet soil + shrinkage dish, g	44.71	46.44
Moisture content of the soil	49.29	49.10
Mass of dry soil pat before waxing, g	15.48	15.54
Volume of dry soil pat + wax, cm^3	13.10	13.68
Mass of dry soil pat + wax in air, g	19.41	19.94
Mass of dry soil pat + wax in water, g	6.31	6.26
Mass of wax, g	3.93	4.40
Volume of wax, cm^3	4.25	4.76
Specific gravity of wax	0.925	0.925
Volume of dry soil pat, cm^3	8.85	8.92
SHRINKAGE LIMIT, SL	**20.55**	**20.74**
SHRINKAGE RATIO, R	**1.75**	**1.74**

Project Numb 18108333 (1000) Date Tested December 3, 2018

Tested By X. Meng Checked By

Notes:
Shrinkage limits of samples determined according to ASTM D4943-18 standard.
Test carried out using wax method.
Microsere Wax 5214.

Certificate of Analysis

eurofins | Environment Testing

Client: Golder Associates Ltd. (Ottawa)
1931 Robertson Road
Ottawa, ON
K2H 5B7
Attention: Mr. Alex Meacoe
PO#:
Invoice to: Golder Associates Ltd. (Ottawa)

Report Number: 1821076
Date Submitted: 2018-11-20
Date Reported: 2018-11-27
Project: 18108333/1000
COC #: 838159

				Lab I.D.	1400203	1400204	1400205	1400206
				Sample Matrix	Soil	Soil	Soil	Soil
				Sample Type				
				Sampling Date	2018-11-01	2018-10-29	2018-10-30	2018-11-07
				Sample I.D.	18-24 sa3/5-7'	18-25 sa3/5-7'	18-29 sa3/5-7'	18-06 sa3A/5.5-6'8''
Group	**Analyte**	**MRL**	**Units**	**Guideline**				
Anions	Cl	0.002	%		<0.002	<0.002	<0.002	<0.002
	SO4	0.01	%		<0.01	<0.01	<0.01	0.05
General Chemistry	Electrical Conductivity	0.05	mS/cm		0.30	0.18	0.19	0.24
	pH	2.00			7.43	7.96	8.00	7.15
	Resistivity	1	ohm-cm		3330	5880	5260	4170

				Lab I.D.	1400207
				Sample Matrix	Soil
				Sample Type	
				Sampling Date	2018-11-08
				Sample I.D.	18-09 sa3/5-7'
Group	**Analyte**	**MRL**	**Units**	**Guideline**	
Anions	Cl	0.002	%		<0.002
	SO4	0.01	%		0.01
General Chemistry	Electrical Conductivity	0.05	mS/cm		0.18
	pH	2.00			7.97
	Resistivity	1	ohm-cm		5560

Guideline = *** = Guideline Exceedence**

Results relate only to the parameters tested on the samples submitted.
Methods references and/or additional QA/QC information available on request.

MRL = Method Reporting Limit, AO = Aesthetic Objective, OG = Operational Guideline, MAC = Maximum Acceptable Concentration, IMAC = Interim Maximum Acceptable Concentration, STD = Standard, PWQO = Provincial Water Quality Guideline, IPWQO = Interim Provincial Water Quality Objective, TDR = Typical Desired Range

Certificate of Analysis

eurofins | Environment Testing

Client: Golder Associates Ltd. (Ottawa)
1931 Robertson Road
Ottawa, ON
K2H 5B7
Attention: Mr. Steve Dunlop
PO#:
Invoice to: Golder Associates Ltd. (Ottawa)

Report Number: 1705915
Date Submitted: 2017-04-21
Date Reported: 2017-04-28
Project: 1771847
COC #: 817524

				Lab I.D.	1289218	1289219	1289220	1289221
				Sample Matrix	Soil	Soil	Soil	Soil
				Sample Type				
				Sampling Date	2017-03-30	2017-03-30	2017-03-30	2017-03-30
				Sample I.D.	BH17-19 sa2 5-7	BH17-29 sa2 5-7	BH17-37 sa2 5-7	BH17-47 sa2 5-7
Group	**Analyte**	**MRL**	**Units**	**Guideline**				
Agri. - Soil	pH	2.0			8.0	8.0	8.0	8.1
General Chemistry	Electrical Conductivity	0.05	mS/cm		0.22	0.19	0.20	0.19
	Resistivity	1	ohm-cm		4540	5260	5000	5260
	SO4	0.01	%		<0.01	<0.01	<0.01	<0.01
Subcontract	Cl	0.002	%		<0.002	0.003	0.002	<0.002

				Lab I.D.	1289222
				Sample Matrix	Soil
				Sample Type	
				Sampling Date	2017-03-30
				Sample I.D.	BH17-57 sa2 5-7
Group	**Analyte**	**MRL**	**Units**	**Guideline**	
Agri. - Soil	pH	2.0			8.0
General Chemistry	Electrical Conductivity	0.05	mS/cm		0.16
	Resistivity	1	ohm-cm		6250
	SO4	0.01	%		<0.01
Subcontract	Cl	0.002	%		<0.002

Guideline = *** = Guideline Exceedence**

All analysis completed in Ottawa, Ontario (unless otherwise indicated by ** which indicates analysis was completed in Mississauga, Ontario).
Results relate only to the parameters tested on the samples submitted.
Methods references and/or additional QA/QC information available on request.

MRL = Method Reporting Limit, AO = Aesthetic Objective, OG = Operational Guideline, MAC = Maximum Acceptable Concentration, IMAC = Interim Maximum Acceptable Concentration, STD = Standard, PWQO = Provincial Water Quality Guideline, IPWQO = Interim Provincial Water Quality Objective, TDR = Typical Desired Range

APPENDIX 2

FIGURE 1 - KEY PLAN

FIGURE 2 TO 11 - SLOPE STABILITY ANALYSIS SECTIONS

FIGURE 12 - TEST FILL PILE SETTLEMENT MONITORING PROGRAM DRAWING

DRAWING PG5036-1 - TEST HOLE LOCATION PLAN

DRAWING PG5036-2 - PERMISSIBLE GRADE RAISE PLAN

DRAWING PG5036-3 - TREE PLANTING SETBACK RECOMMENDATION

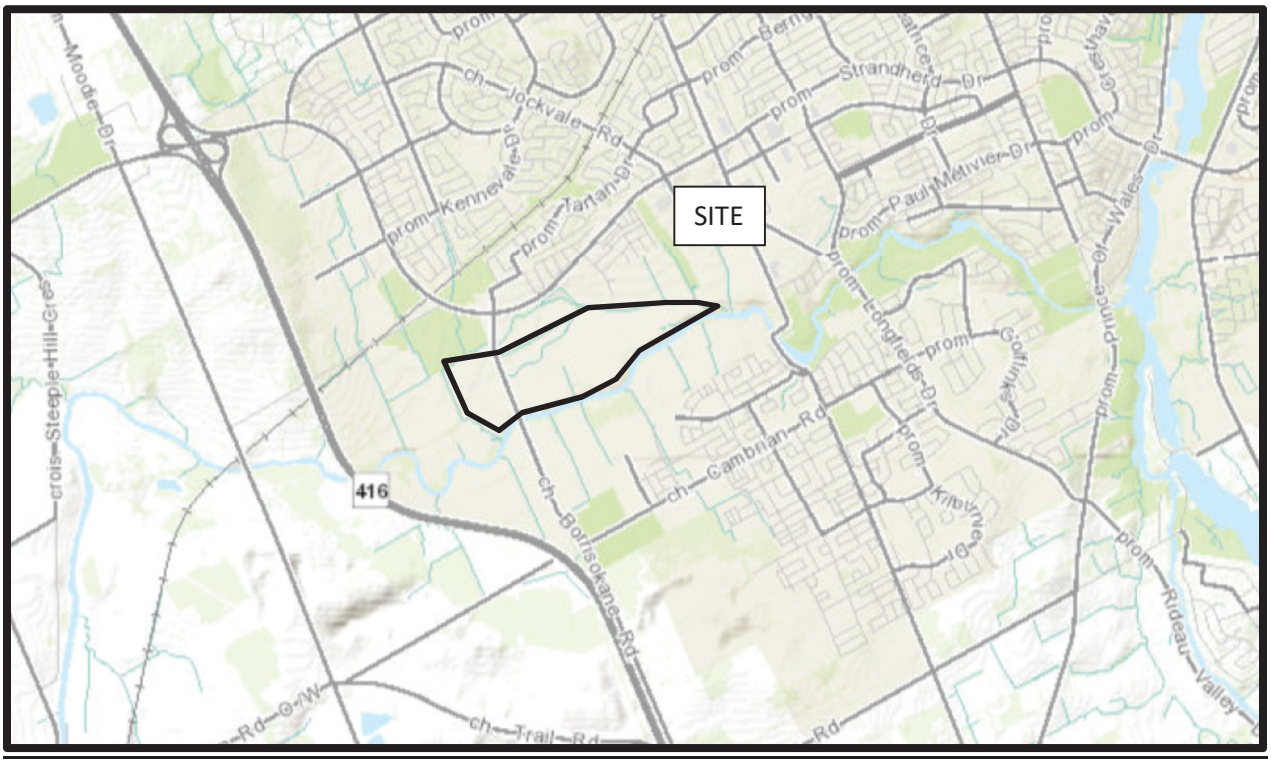

FIGURE 1

KEY PLAN

Figure 2 - Section A - Static Analysis

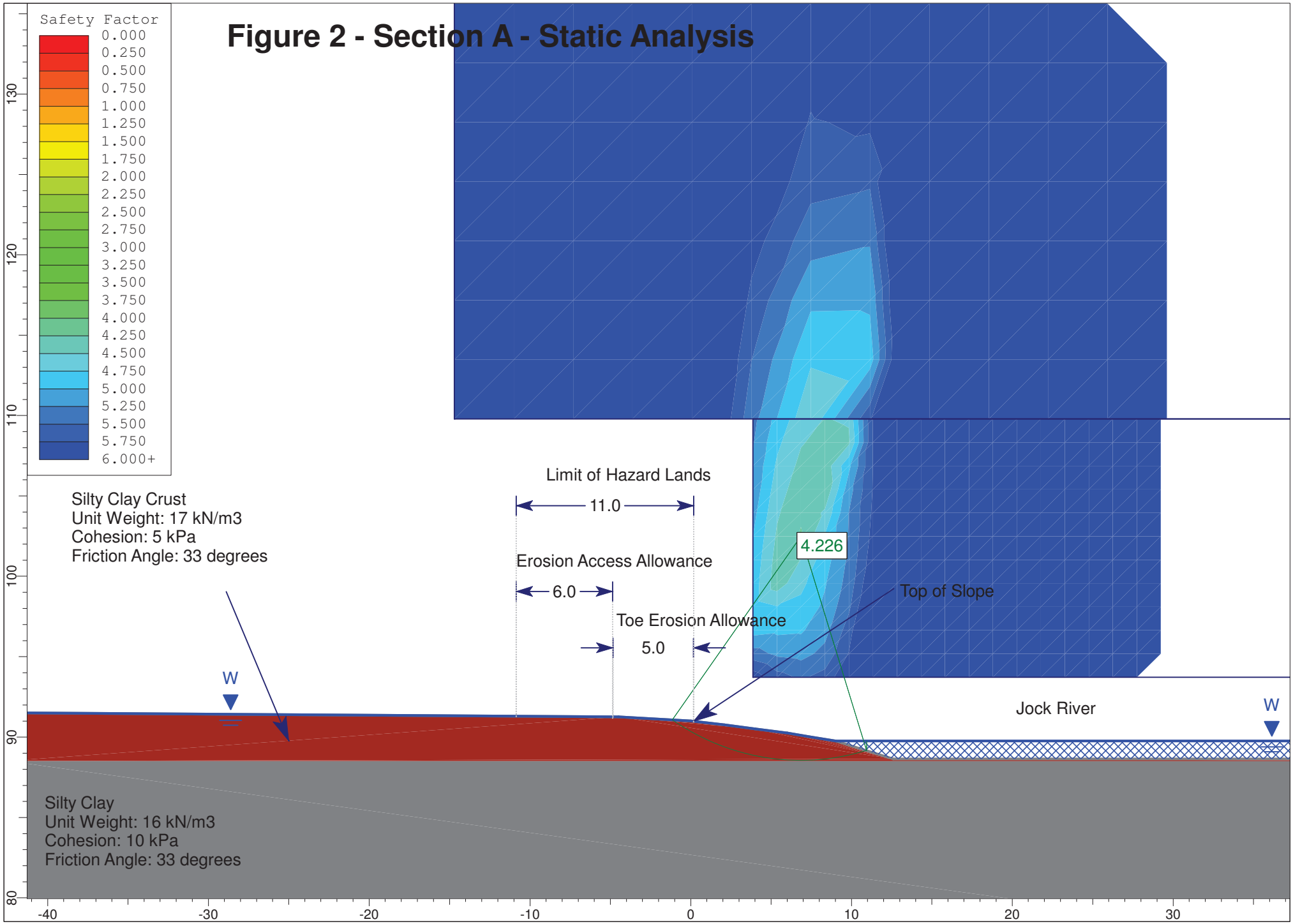

Figure 3 - Section A - Seismic Analysis

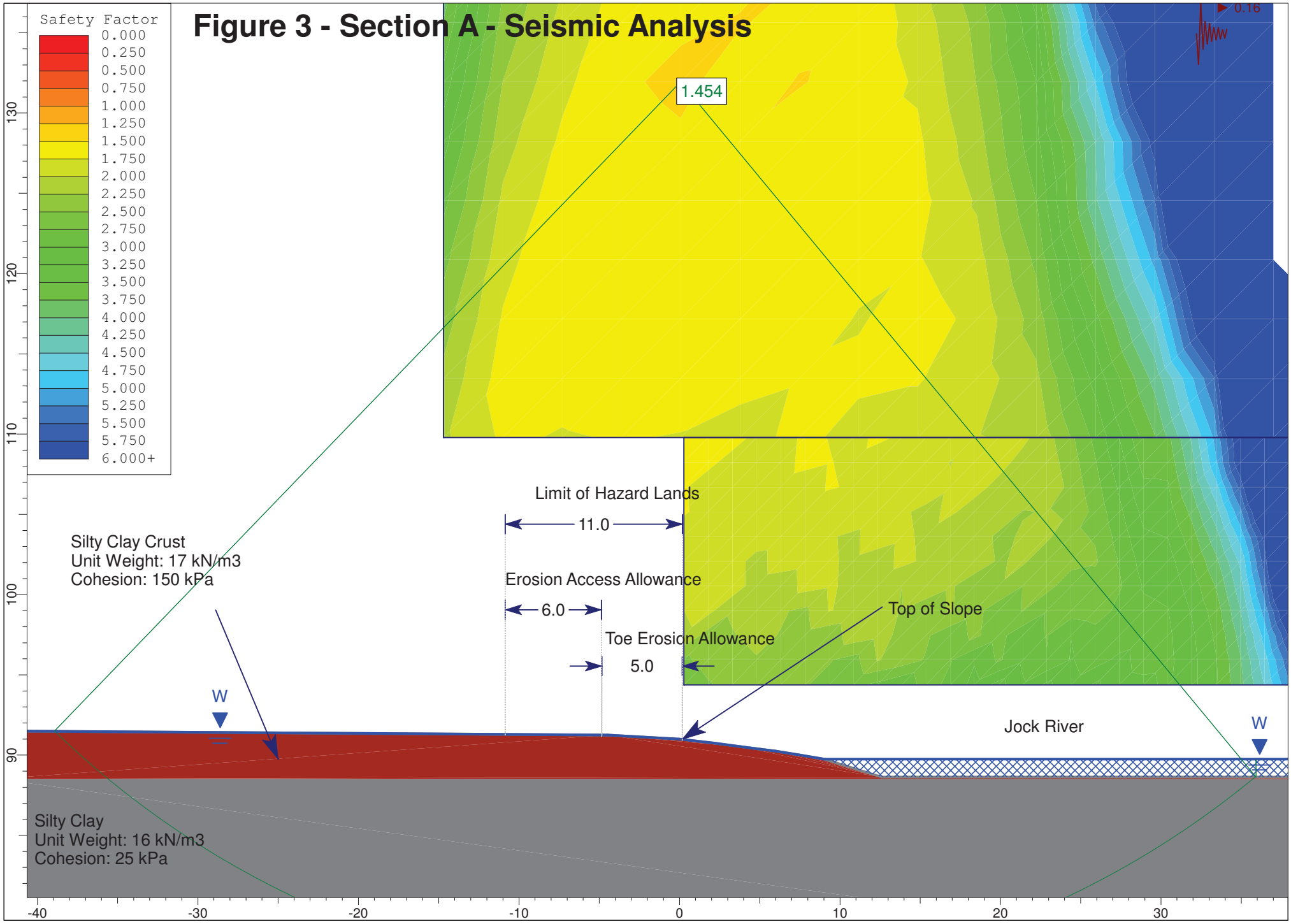

Figure 4 - Section B - Static Analysis

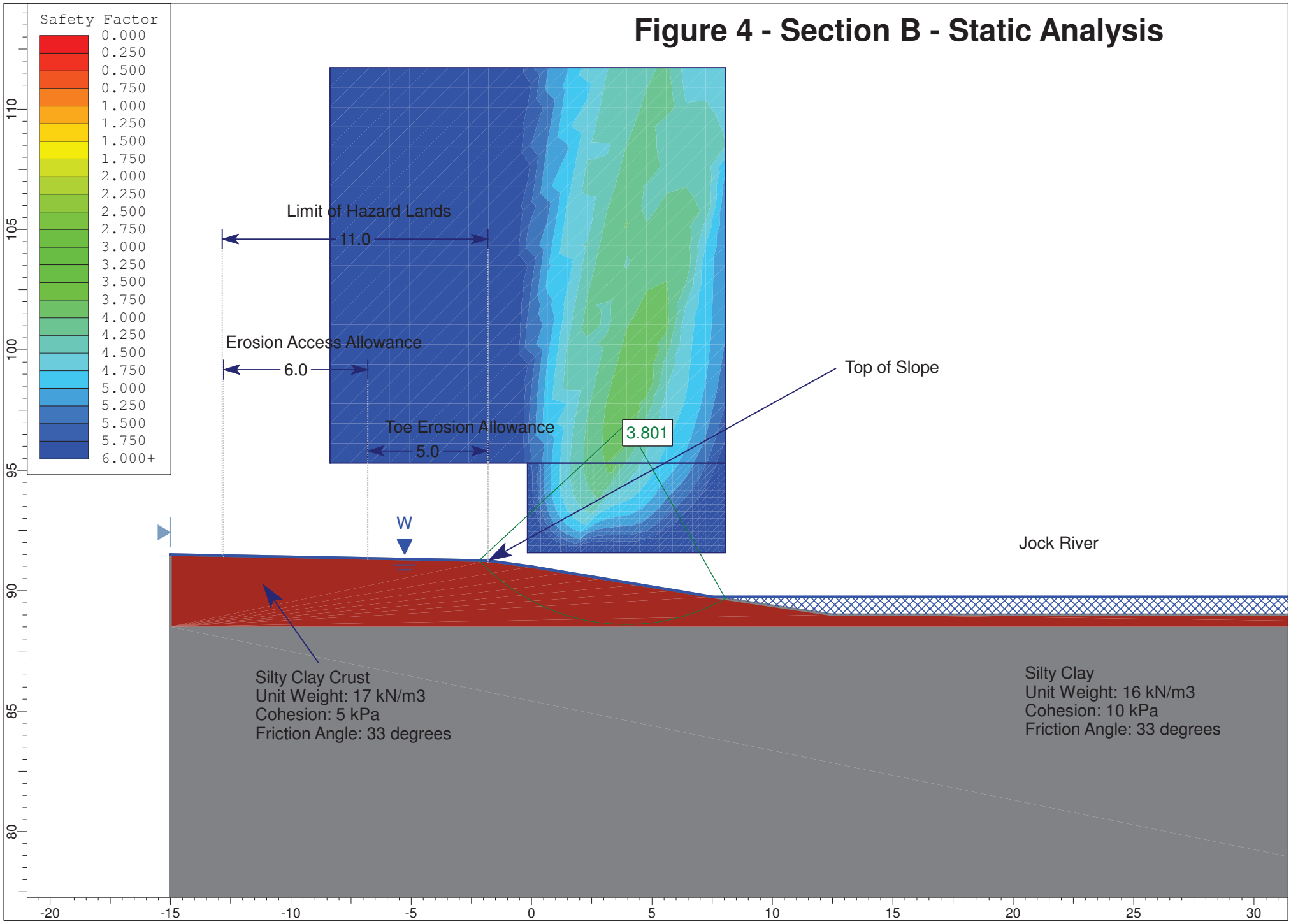

Figure 5 - Section B - Seismic Analysis

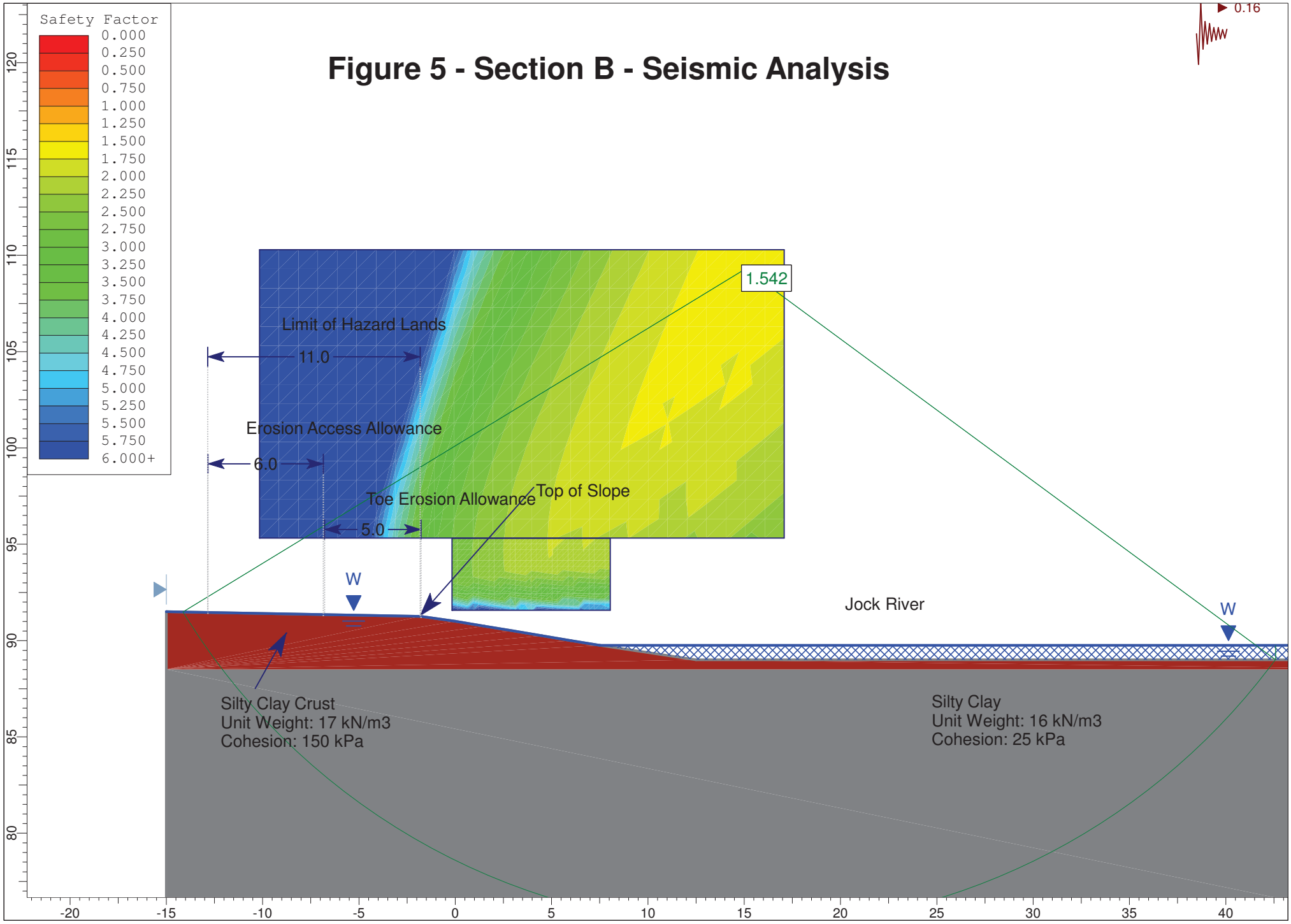

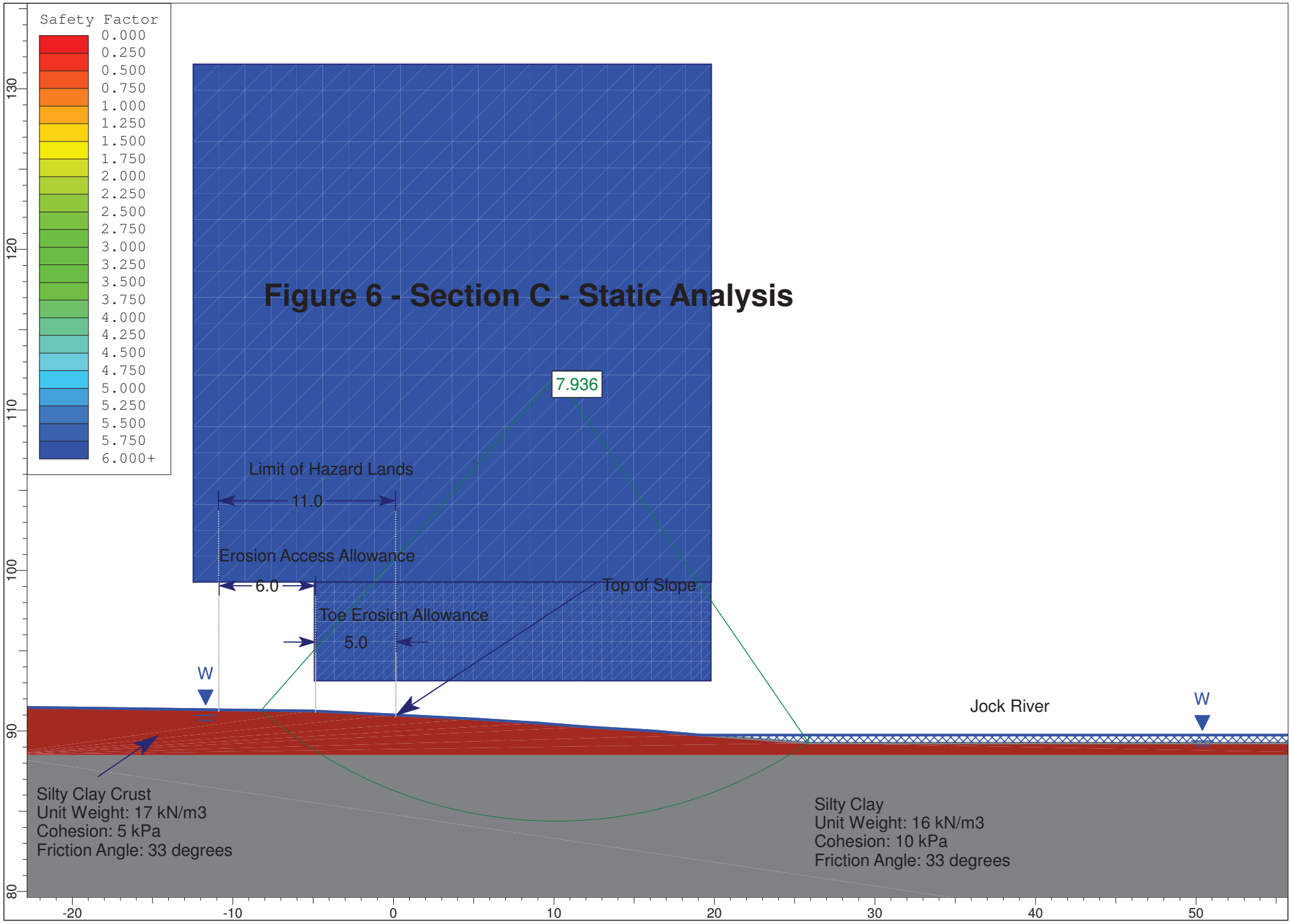

Figure 6 - Section C - Static Analysis

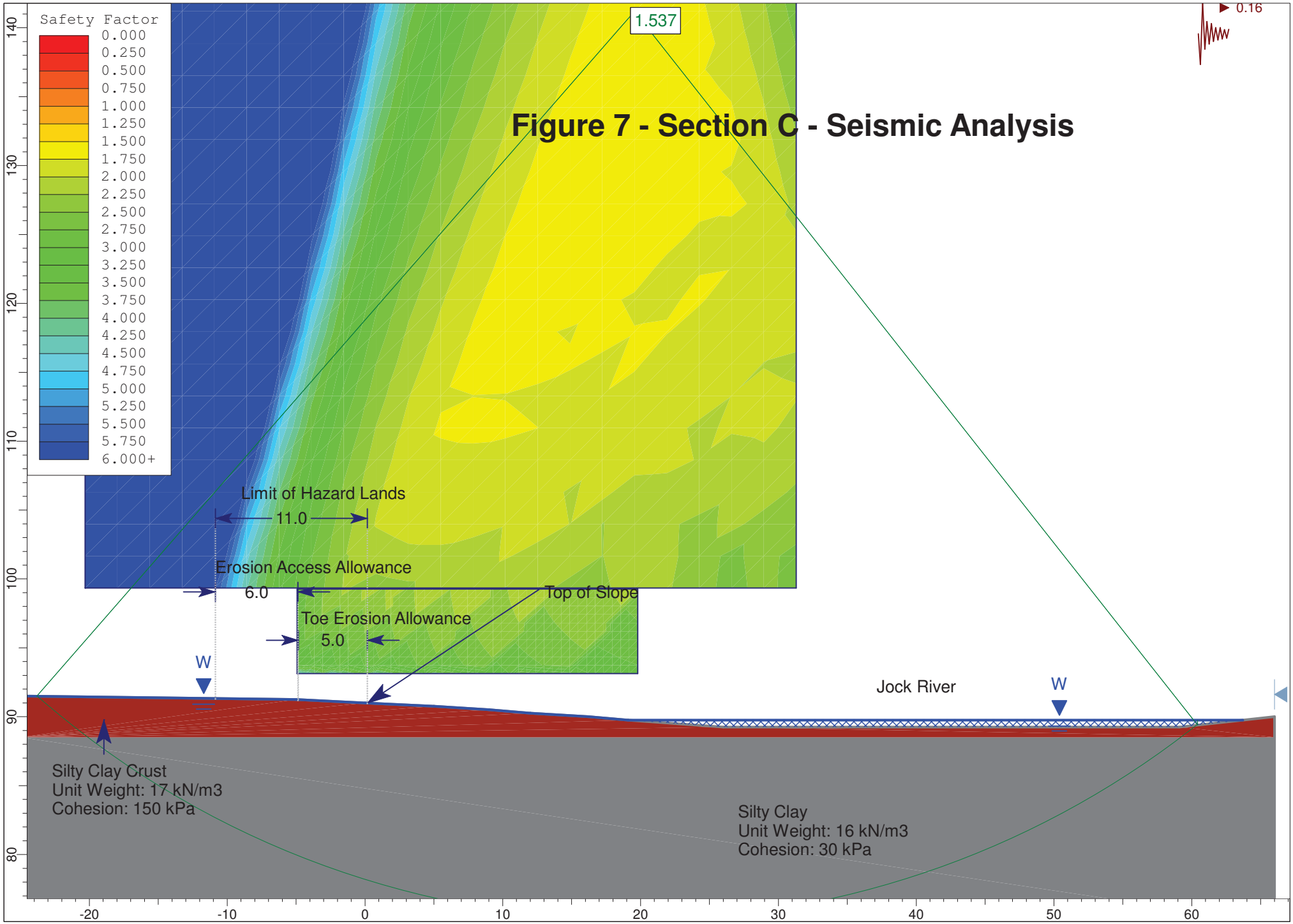

Figure 7 - Section C - Seismic Analysis

Figure 8 - Section D - Static Analysis

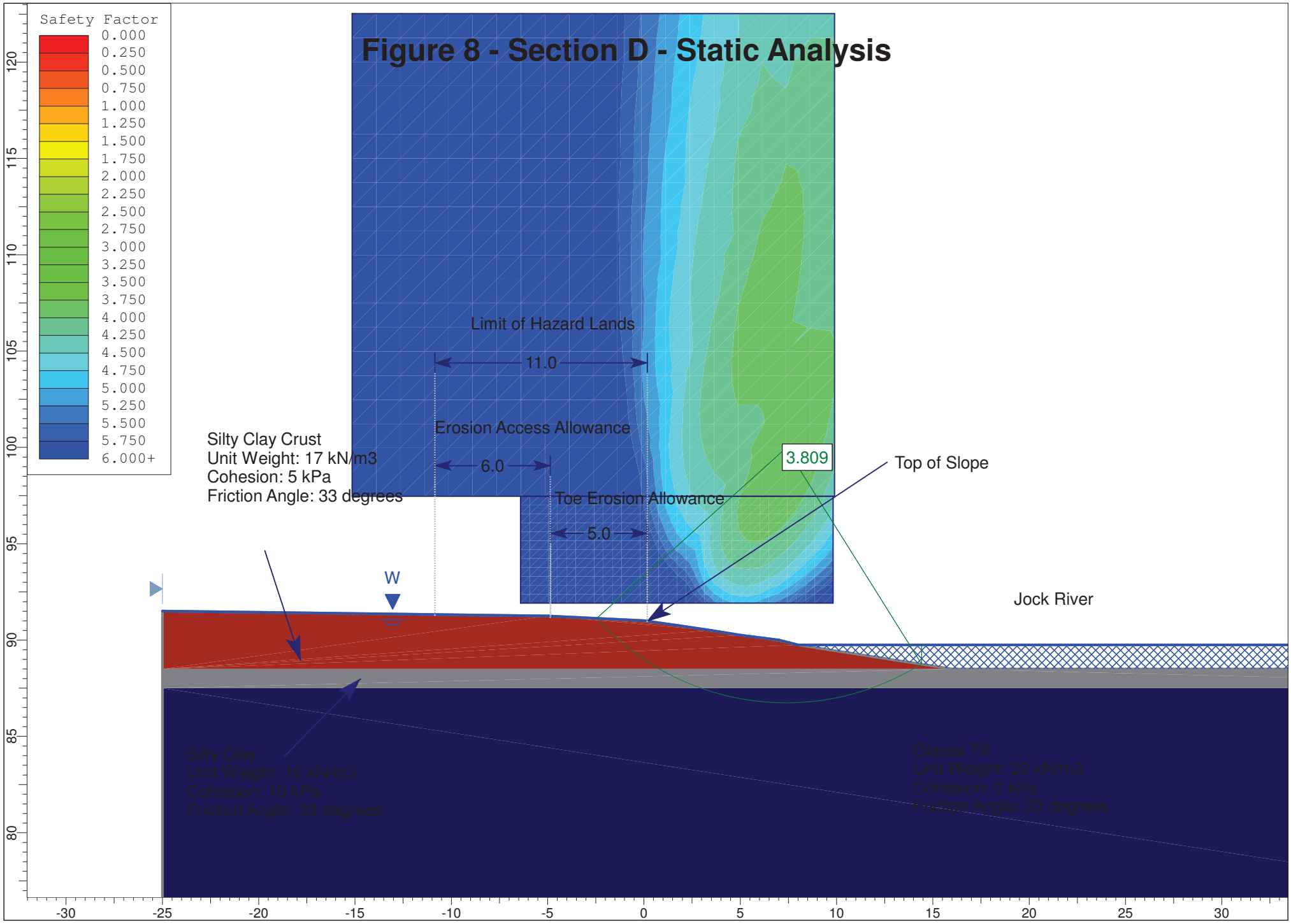

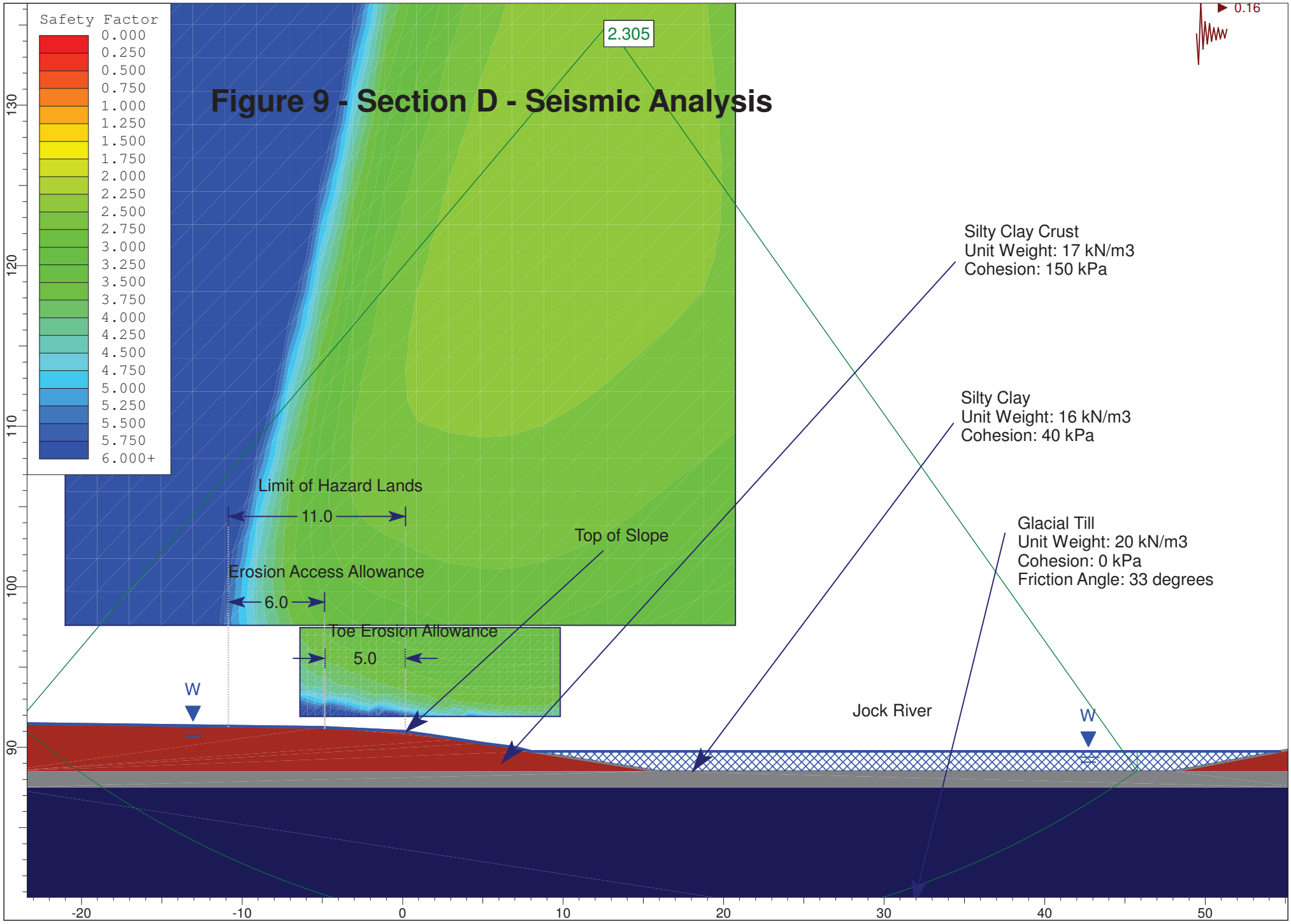
Figure 9 - Section D - Seismic Analysis
Safety Factor
0.000
0.250
0.500
0.750
1.000
1.250
1.500
1.750
2.000
2.250
2.500
2.750
3.000
3.250
3.500
3.750
4.000
4.250
4.500
4.750
5.000
5.250
5.500
5.750
6.000+
2.305
0.16
Silty Clay Crust
Unit Weight: 17 kN/m3
Cohesion: 150 kPa
Silty Clay
Unit Weight: 16 kN/m3
Cohesion: 40 kPa
Glacial Till
Unit Weight: 20 kN/m3
Cohesion: 0 kPa
Friction Angle: 33 degrees
Limit of Hazard Lands
11.0
Top of Slope
Erosion Access Allowance
6.0
Toe Erosion Allowance
5.0
W
W
Jock River
130
120
110
100
90
-20
-10
0
10
20
30
40
50

Figure 10 - Section E - Static Analysis

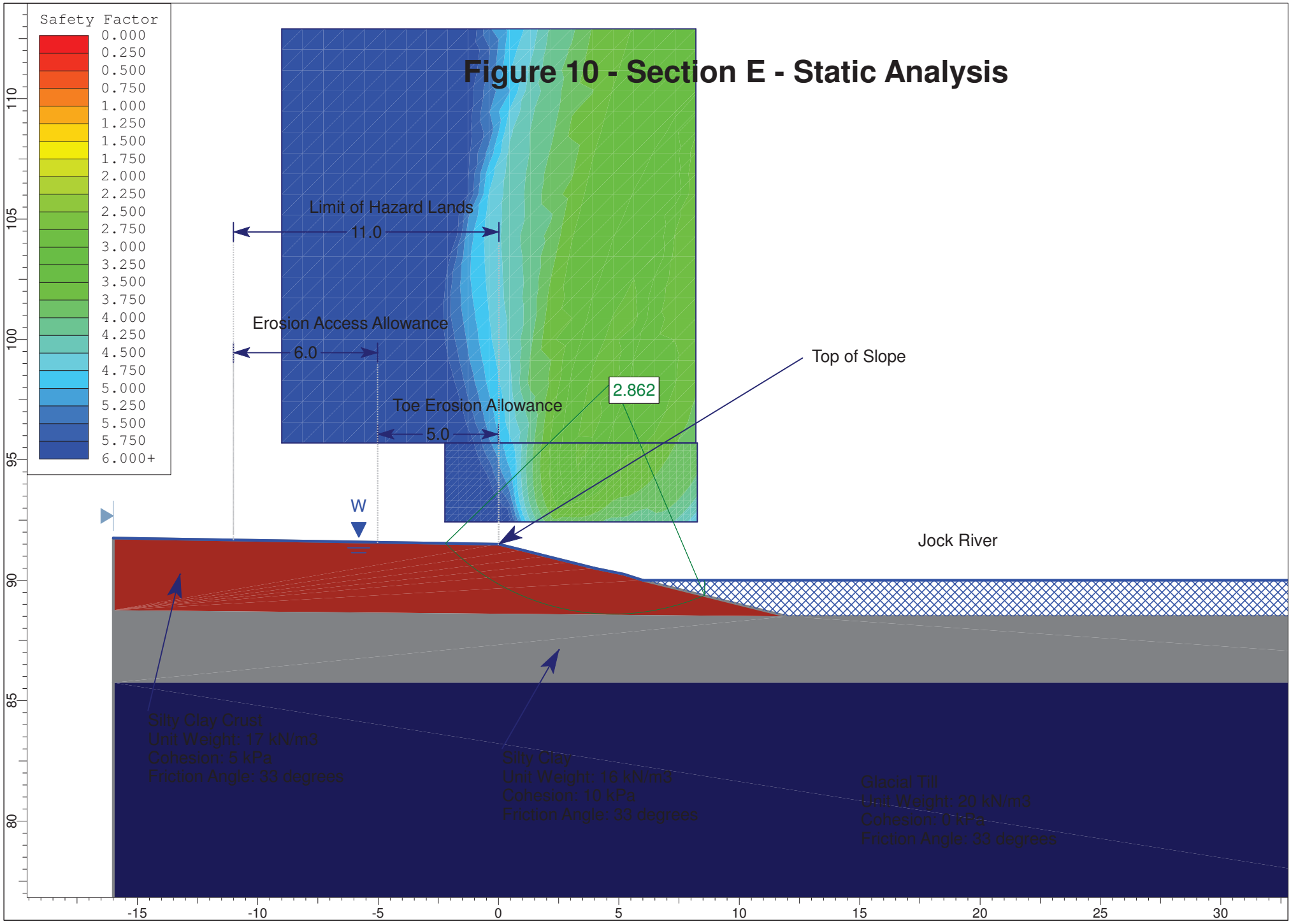

Figure 11 - Section E - Seismic Analysis

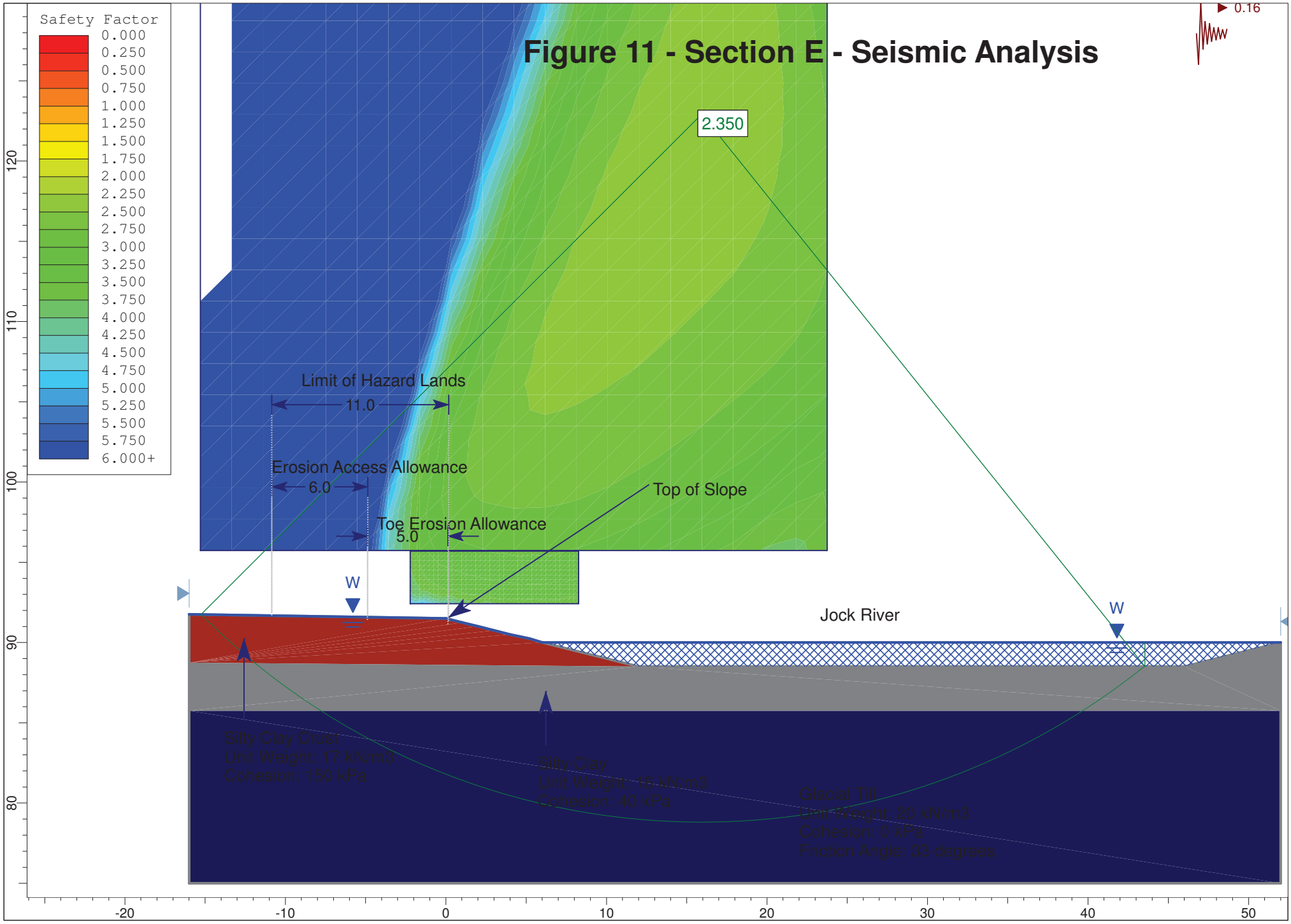

patersongroup
Ottawa Kingston North Bay

Figure 12 - Test Fill Pile Settlement Monitoring Program
Caivan - Conservancy Lands East - Borrisokane Road - Ottawa

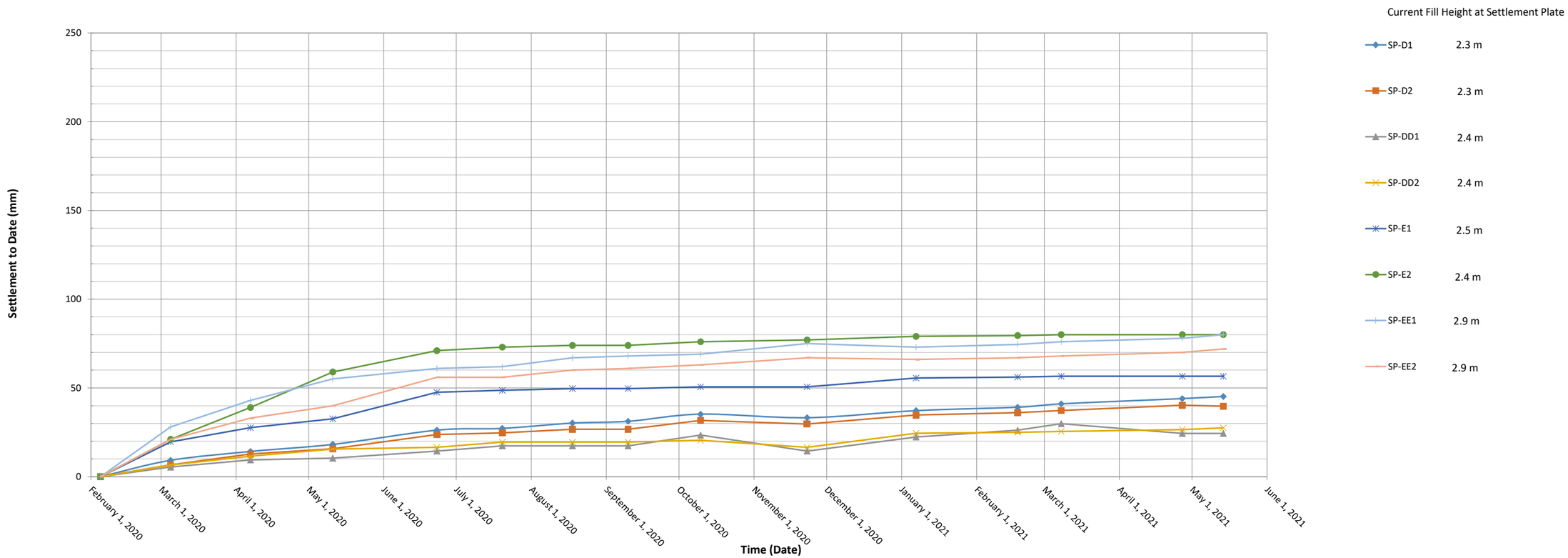

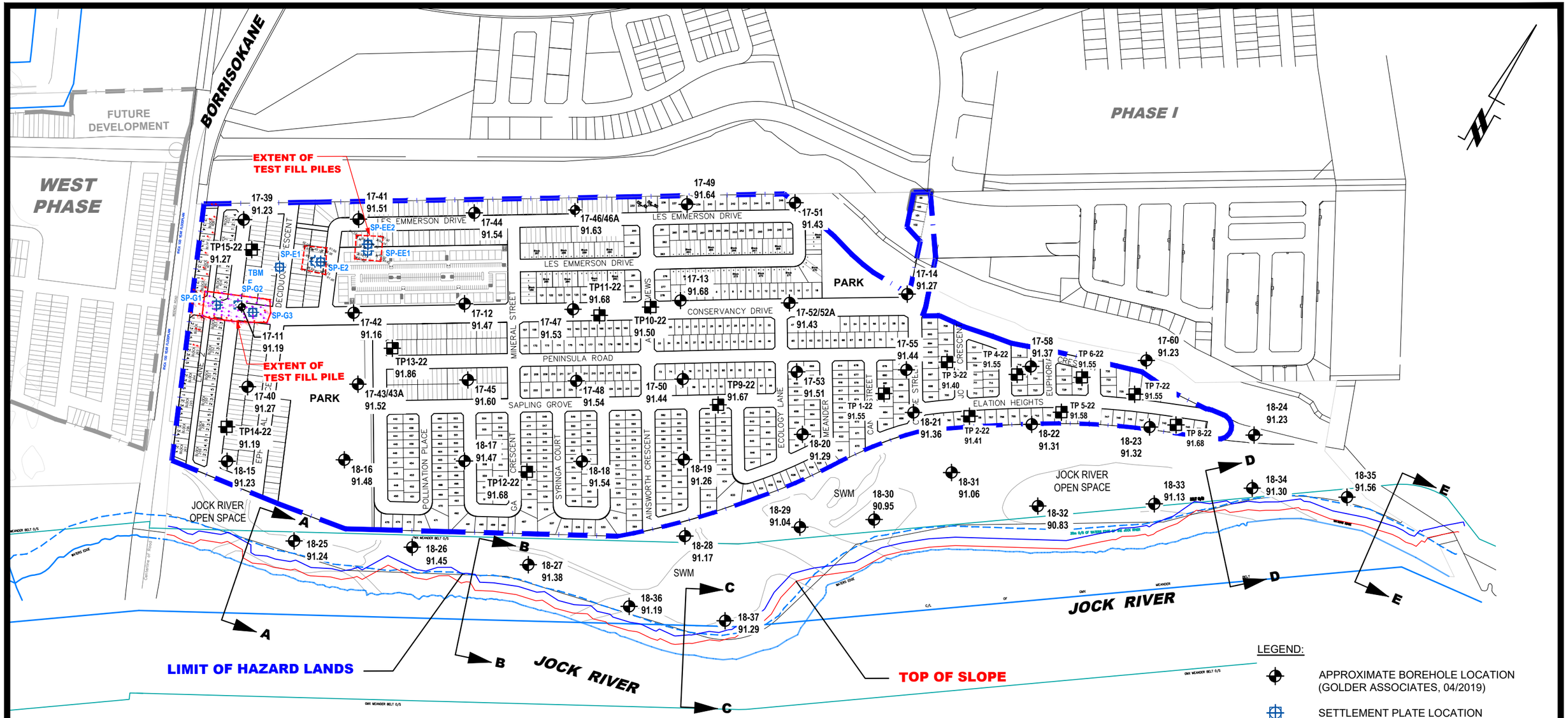

LEGEND:

- APPROXIMATE BOREHOLE LOCATION (GOLDER ASSOCIATES, 04/2019)
- SETTLEMENT PLATE LOCATION
- TEST PIT LOCATION
- 91.56 GROUND SURFACE ELEVATION (m)

BOREHOLE LOCATIONS WERE SURVEYED BY OTHERS AND ARE REFERENCED TO A GEODETIC DATUM.

SCALE: 1:5000

0 50 100 150 200 250m

PATERSON GROUP
9 AURIGA DRIVE
OTTAWA, ON
K2E 7T9
TEL: (613) 226-7381

NO.	REVISIONS	DATE	INITIAL
7	UPDATED TO LATEST CONCEPTUAL PLAN REVISED SITE BOUNDARIES	04/03/2024	KP
6	UPDATED TO LATEST CONCEPTUAL PLAN	07/12/2022	DJG
5	SURCHARGE PILE ADDED TO PLAN SETTLEMENT PLATES SP-G1 - SP-G3 ADDED TO PLAN	14/07/2022	OC
4	SURCHARGE PILE ADDED TO PLAN SETTLEMENT PLATES SP-F1 - SP-F6 ADDED TO PLAN	01/02/2022	OC
3	REVISED CONCEPTUAL PLAN	17/07/2021	OC

CAIVAN COMMUNITIES

GEOTECHNICAL INVESTIGATION
PROP. RESIDENTIAL DEVELOPMENT - CONSERVANCY LANDS EAST

OTTAWA, ONTARIO

Title:

TEST HOLE LOCATION PLAN

Scale: 1:5000	Date: 09/2019
Drawn by: RCG	Report No.: PG5036-1
Checked by: OC	Dwg. No.: PG5036-1
Approved by: DJG	Revision No.: 7

p:\autocad drawings\geotechnical\pg50xx\pg5036\pg5036-1 thlp east land (rev.07).dwg

11x17

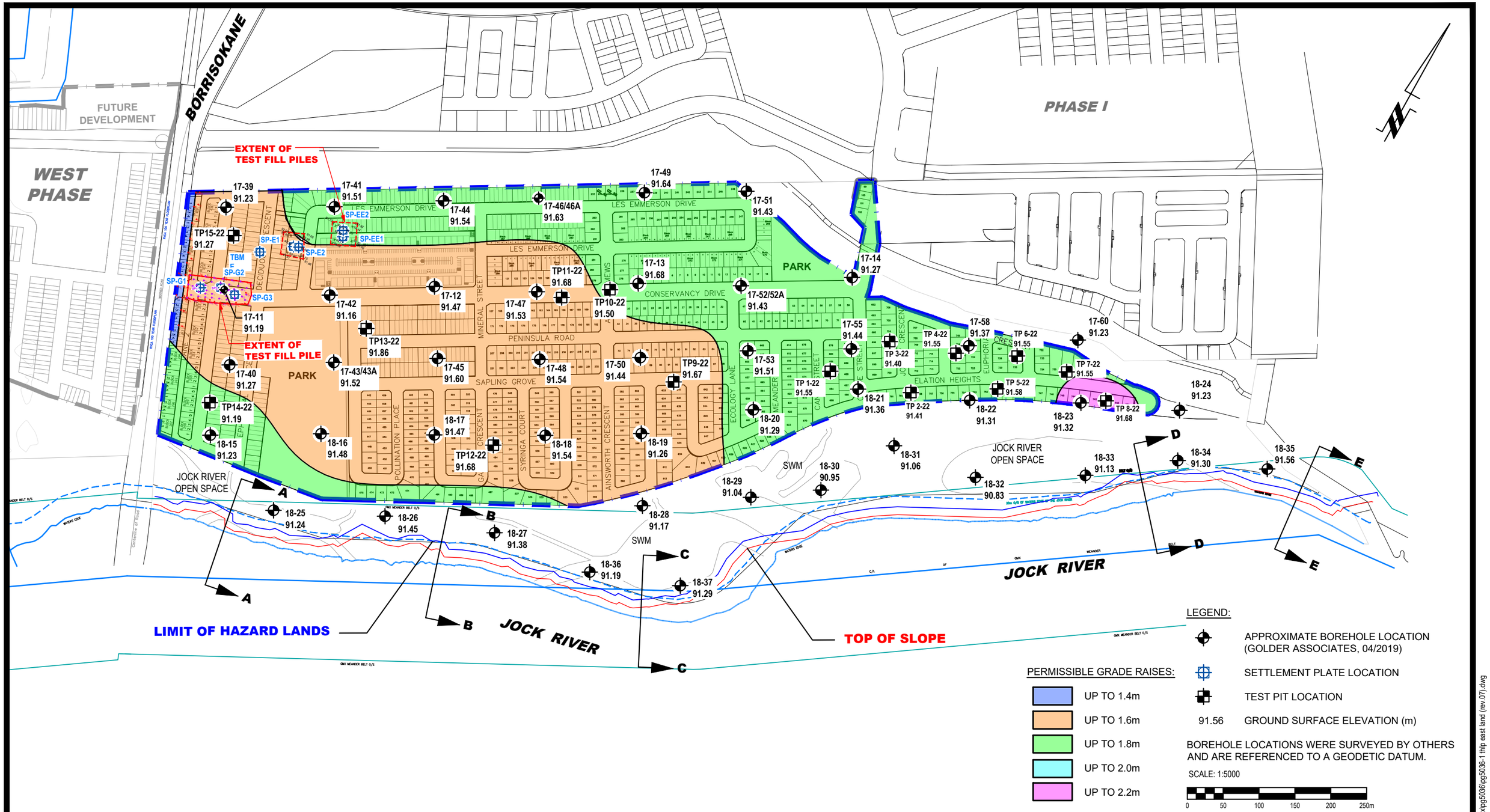

PATERSON GROUP
9 AURIGA DRIVE
OTTAWA, ON
K2E 7T9
TEL: (613) 226-7381

NO.	REVISIONS	DATE	INITIAL
6	UPDATED TO LATEST CONCEPTUAL PLAN REVISED SITE BOUNDARIES	04/03/2024	KP
5	TP 1-22 - TP 8-22 ADDED TO PLAN	19/10/2022	KP
4	UPDATED TO LATEST CONCEPTUAL PLAN	07/17/2022	DJG
3	REVISED CONCEPTUAL PLAN ADDED TEST FILL PILES	14/07/2021	OC
2	REVISED CONCEPTUAL PLAN ADDED TEST FILL PILES	04/02/2021	OC

CAIVAN COMMUNITIES

GEOTECHNICAL INVESTIGATION
PROP. RESIDENTIAL DEVELOPMENT - CONSERVANCY LANDS EAST

OTTAWA, ONTARIO

Title:

PERMISSIBLE GRADE RAISE PLAN

Scale: 1:5000	Date: 09/2019
Drawn by: NFRV	Report No.: PG5036-1
Checked by: OC	Dwg. No.: PG5036-2
Approved by: DJG	Revision No.: 6

p:\autocad drawings\geotechnical\pg50xx\pg5036\pg5036-1 thlp east land (rev.07).dwg

11x17

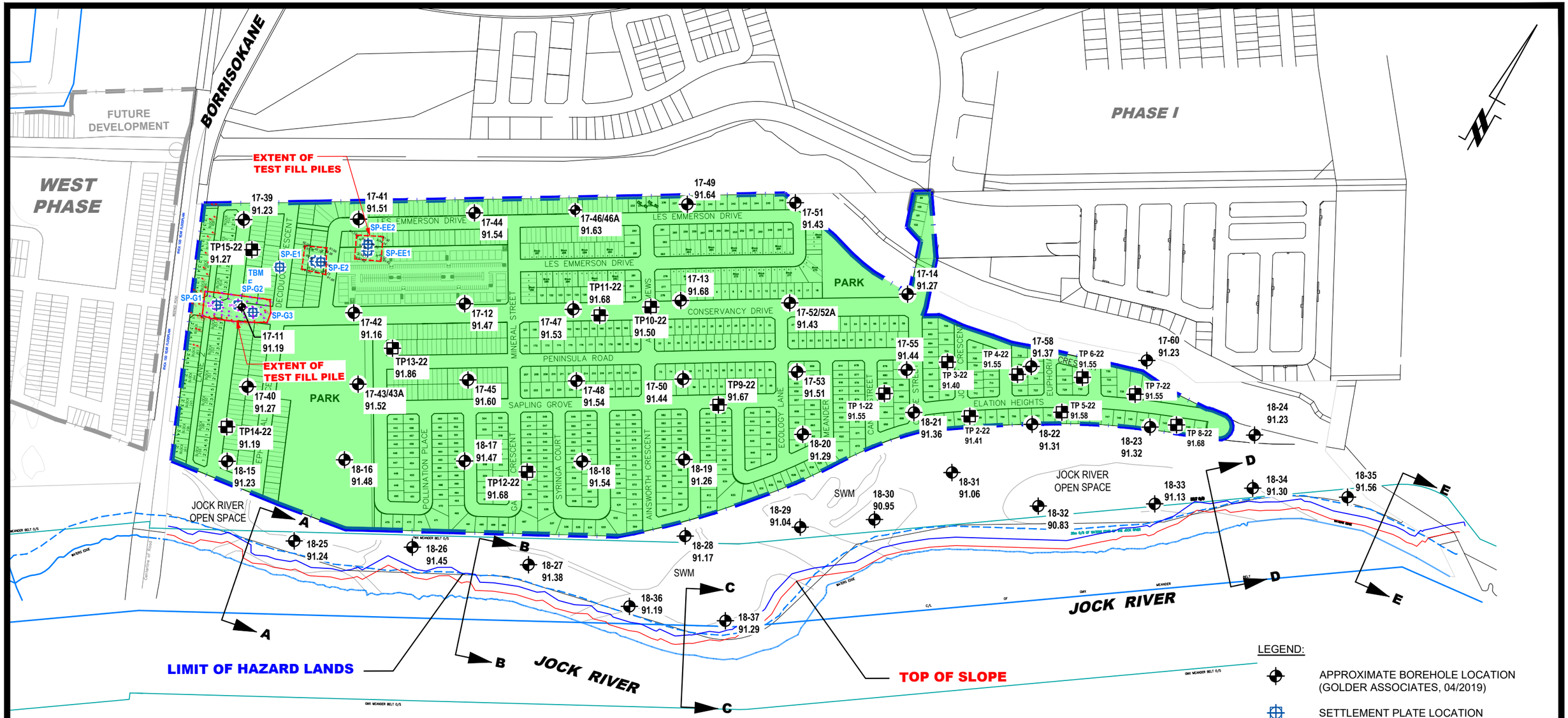

LEGEND:

- APPROXIMATE BOREHOLE LOCATION (GOLDER ASSOCIATES, 04/2019)
- SETTLEMENT PLATE LOCATION
- TEST PIT LOCATION
- 91.56 GROUND SURFACE ELEVATION (m)

TREE PLANTING SETBACK:

- MINIMUM TREE PLANTING SETBACK 4.5m

BOREHOLE LOCATIONS WERE SURVEYED BY OTHERS AND ARE REFERENCED TO A GEODETIC DATUM.

SCALE: 1:5000

0 50 100 150 200 250m

PATERSON GROUP
9 AURIGA DRIVE
OTTAWA, ON
K2E 7T9
TEL: (613) 226-7381

NO.	REVISIONS	DATE	INITIAL
6	UPDATED TO LATEST CONCEPTUAL PLAN REVISED SITE BOUNDARIES	04/03/2024	KP
5	TP 1-22 - TP 8-22 ADDED TO PLAN	19/10/2022	KP
4	SURCHARGE PILES ADDED TO PLAN SETTLEMENT PLATES SP-F1 - SP-F6 ADDED TO PLAN	01/02/2022	OC
3	REVISED CONCEPTUAL PLAN	14/02/2021	OC
2	REVISED CONCEPTUAL PLAN ADDED TEST FILL PILES	04/02/2021	OC

CAIVAN COMMUNITIES

GEOTECHNICAL INVESTIGATION
PROP. RESIDENTIAL DEVELOPMENT - CONSERVANCY LANDS EAST

OTTAWA, ONTARIO

Title:

TREE PLANTING SETBACK PLAN

Scale: 1:5000	Date: 09/2019
Drawn by: RCG	Report No.: PG5036-1
Checked by: OC	Dwg. No.: PG5036-3
Approved by: DJG	Revision No.: 6

p:\autocad drawings\geotechnical\pg50xx\pg5036\pg5036-1 thlp east land (rev.07).dwg

11x17

APPENDIX 3

RETAINING WALL GLOBAL STABILITY ANALYSIS

Slope stability analysis

Input data (Construction stage 1)

Project

Settings

Canadian Highway and Bridge Design Code

Stability analysis

Verification methodology : according to LRFD
Earthquake analysis : Standard

Load factors					
Design situation - Service I					
		Minimum		Maximum	
Earth surcharge load (permanent) :	ES =	1.00	[–]	1.00	[–]
Live load surcharge :	LL =	0.00	[–]	1.00	[–]

Resistance factors			
Design situation - Service I			
Resistance factor on stability :	φ_{SS} =	0.65	[–]

Interface

No.	Interface location	Coordinates of interface points [m]					
		x	z	x	z	x	z
1	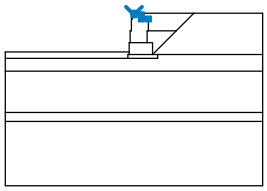	0.00	0.00	0.00	-0.13	0.58	-0.13
		0.58	-0.46	1.11	-0.46		
2	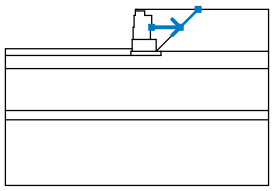	1.11	-1.37	3.28	-1.37	4.65	0.00
3	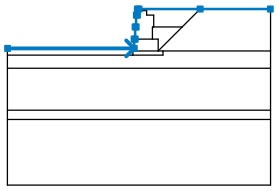	-10.00	-3.00	-0.37	-3.00	-0.37	-2.29
		-0.29	-2.29	-0.29	-1.37	-0.21	-1.37
		-0.21	-0.46	-0.13	-0.46	-0.13	0.00
		0.00	0.00	4.65	0.00	10.00	0.00

No.	Interface location	Coordinates of interface points [m]					
		x	z	x	z	x	z
4	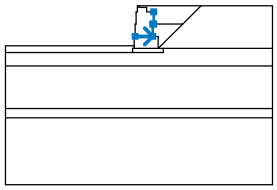	-0.29	-2.29	1.03	-2.29	1.03	-1.37
		1.11	-1.37	1.11	-0.46		
5	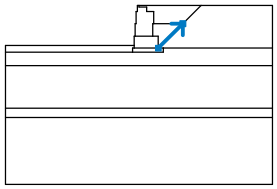	1.45	-3.20	3.28	-1.37		
6	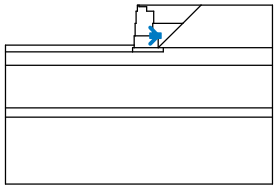	1.03	-2.29	1.45	-2.29		
7	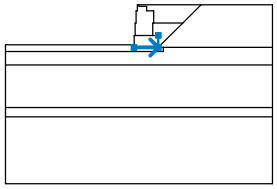	-0.37	-3.20	1.45	-3.20	1.45	-2.29
8	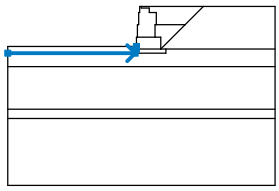	-10.00	-3.50	-0.47	-3.50	-0.47	-3.20
		-0.37	-3.20	-0.37	-3.00		
9	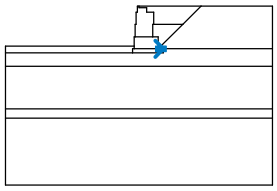	1.45	-3.20	1.83	-3.20		
10	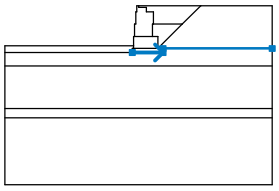	-0.47	-3.50	1.83	-3.50	1.83	-3.20
		10.00	-3.20				

No.	Interface location	Coordinates of interface points [m]					
		x	z	x	z	x	z
11	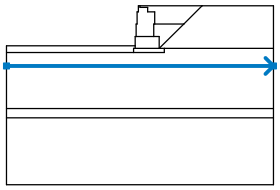	-10.00	-4.50	10.00	-4.50		
12	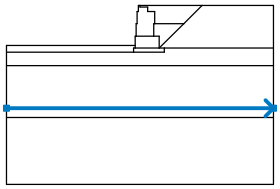	-10.00	-7.70	10.00	-7.70		
13	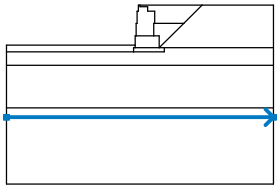	-10.00	-8.40	10.00	-8.40		

Soil parameters - effective stress state

No.	Name	Pattern	ϕ_{ef} [°]	c_{ef} [kPa]	γ [kN/m³]
1	Granular B Type II		36.00	0.00	22.00
2	Silty Clay		33.00	5.00	18.00
3	Grey Silty Clay		33.00	5.00	17.00
4	Glacial Till		33.00	1.00	22.00

Soil parameters - uplift

No.	Name	Pattern	γ_{sat} [kN/m³]	γ_s [kN/m³]	n [–]
1	Granular B Type II		22.00		

No.	Name	Pattern	γ_{sat} [kN/m³]	γ_s [kN/m³]	n [–]
2	Silty Clay		18.00		
3	Grey Silty Clay		17.00		
4	Glacial Till		22.00		

Soil parameters

Granular B Type II

Unit weight : γ = 22.00 kN/m³
Stress-state : effective
Shear strength : Mohr-Coulomb
Angle of internal friction : ϕ_{ef} = 36.00 °
Cohesion of soil : c_{ef} = 0.00 kPa
Saturated unit weight : γ_{sat} = 22.00 kN/m³

Silty Clay

Unit weight : γ = 18.00 kN/m³
Stress-state : effective
Shear strength : Mohr-Coulomb
Angle of internal friction : ϕ_{ef} = 33.00 °
Cohesion of soil : c_{ef} = 5.00 kPa
Saturated unit weight : γ_{sat} = 18.00 kN/m³

Grey Silty Clay

Unit weight : γ = 17.00 kN/m³
Stress-state : effective
Shear strength : Mohr-Coulomb
Angle of internal friction : ϕ_{ef} = 33.00 °
Cohesion of soil : c_{ef} = 5.00 kPa
Saturated unit weight : γ_{sat} = 17.00 kN/m³

Glacial Till

Unit weight : γ = 22.00 kN/m³
Stress-state : effective
Shear strength : Mohr-Coulomb
Angle of internal friction : ϕ_{ef} = 33.00 °
Cohesion of soil : c_{ef} = 1.00 kPa
Saturated unit weight : γ_{sat} = 22.00 kN/m³

Rigid Bodies

No.	Name	Sample	γ [kN/m³]
1	Material of structure		18.85
2	Foundation		25.00

Assigning and surfaces

No.	Surface position	Coordinates of surface points [m]				Assigned soil
		x	z	x	z	
1	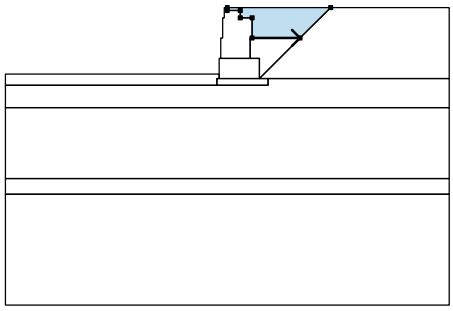	1.11	-1.37	3.28	-1.37	Granular B Type II
		4.65	0.00	0.00	0.00	
		0.00	-0.13	0.58	-0.13	
		0.58	-0.46	1.11	-0.46	
2	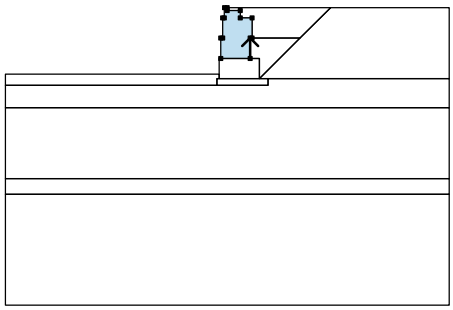	1.03	-2.29	1.03	-1.37	Material of structure
		1.11	-1.37	1.11	-0.46	
		0.58	-0.46	0.58	-0.13	
		0.00	-0.13	0.00	0.00	
		-0.13	0.00	-0.13	-0.46	
		-0.21	-0.46	-0.21	-1.37	
		-0.29	-1.37	-0.29	-2.29	
3	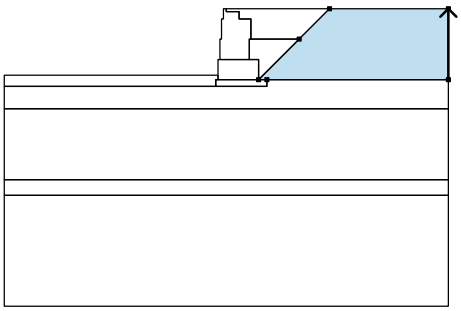	10.00	-3.20	10.00	0.00	Silty Clay
		4.65	0.00	3.28	-1.37	
		1.45	-3.20	1.83	-3.20	

No.	Surface position	Coordinates of surface points [m]				Assigned soil
		x	z	x	z	
4	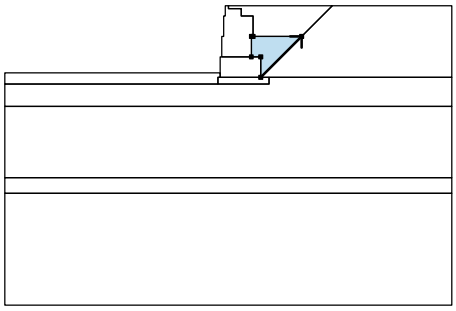	1.45	-3.20	3.28	-1.37	Granular B Type II
		1.11	-1.37	1.03	-1.37	
		1.03	-2.29	1.45	-2.29	
5	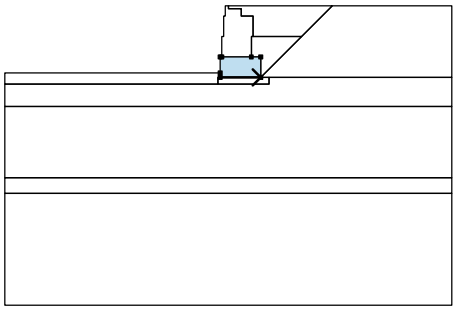	-0.37	-3.20	1.45	-3.20	Material of structure
		1.45	-2.29	1.03	-2.29	
		-0.29	-2.29	-0.37	-2.29	
		-0.37	-3.00			
6	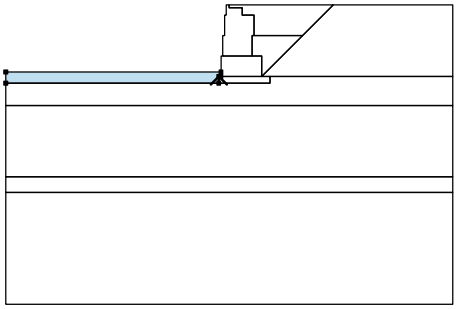	-0.47	-3.50	-0.47	-3.20	Silty Clay
		-0.37	-3.20	-0.37	-3.00	
		-10.00	-3.00	-10.00	-3.50	
7	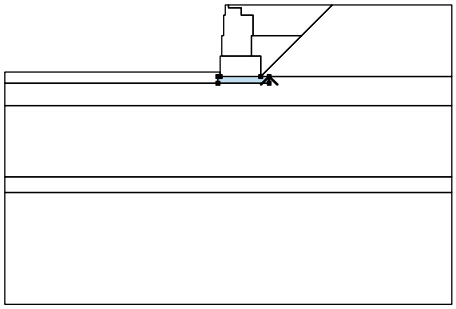	1.83	-3.50	1.83	-3.20	Foundation
		1.45	-3.20	-0.37	-3.20	
		-0.47	-3.20	-0.47	-3.50	

No.	Surface position	Coordinates of surface points [m]				Assigned soil
		x	z	x	z	
8	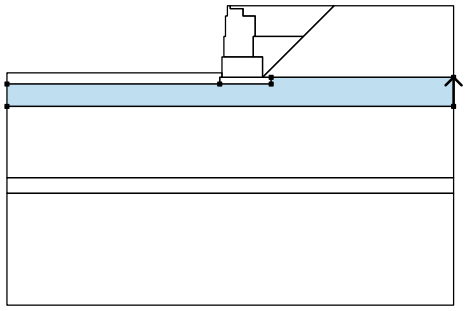	10.00	-4.50	10.00	-3.20	Silty Clay
		1.83	-3.20	1.83	-3.50	
		-0.47	-3.50	-10.00	-3.50	
		-10.00	-4.50			
9	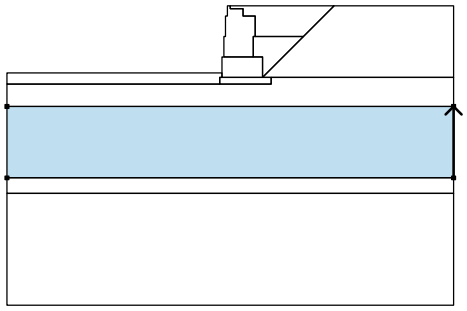	10.00	-7.70	10.00	-4.50	Grey Silty Clay
		-10.00	-4.50	-10.00	-7.70	
10	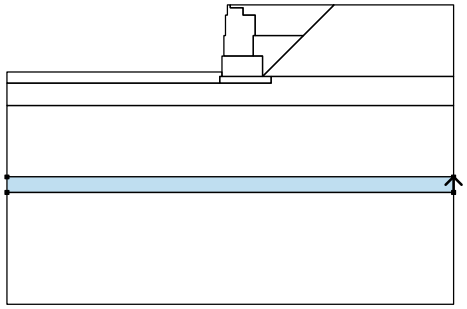	10.00	-8.40	10.00	-7.70	Glacial Till
		-10.00	-7.70	-10.00	-8.40	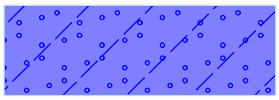
11	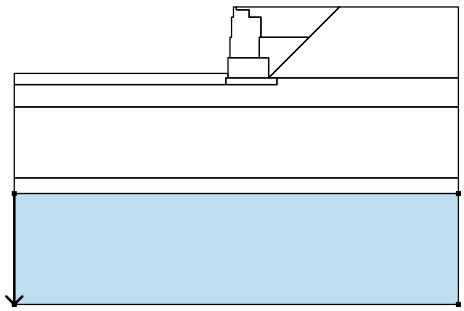	-10.00	-8.40	-10.00	-13.40	Glacial Till
		10.00	-13.40	10.00	-8.40	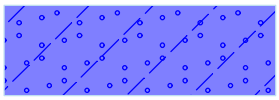

Surcharge

No.	Type	Type of action	Location z [m]	Origin x [m]	Length l [m]	Width b [m]	Slope α [°]	Magnitude q, q_1, f, F, x	q_2, z	unit
1	strip	permanent	on terrain	x = 1.53	l = 8.00		0.00	17.50		kN/m^2

Surcharges

No.	Name
1	Traffic

Water

Water type : No water

Tensile crack

Tensile crack not input.

Earthquake

Earthquake not included.

Settings of the stage of construction

Design situation : Service I

Results (Construction stage 1)

Analysis 1

Circular slip surface

Slip surface parameters							
Center :	x =	-0.77	[m]	Angles :	α_1 =	-39.92	[°]
	z =	0.95	[m]		α_2 =	79.37	[°]
Radius :	R =	5.15	[m]				
The slip surface after optimization.							

Total weight of soil above the slip surface: 341.00 kN/m

Slope stability verification (Bishop)

Sum of active forces : F_a = 152.53 kN/m

Sum of passive forces : F_p = 313.47 kN/m

Factor of Safety: FS = 2.0

Sliding moment : M_a = 785.55 kNm/m

Resisting moment : M_p = 1049.34 kNm/m

Utilization : 74.9 %

Capacity demand ratio CDR: 1.336

Slope stability ACCEPTABLE

Name : Analysis	Stage - analysis : 1 - 1

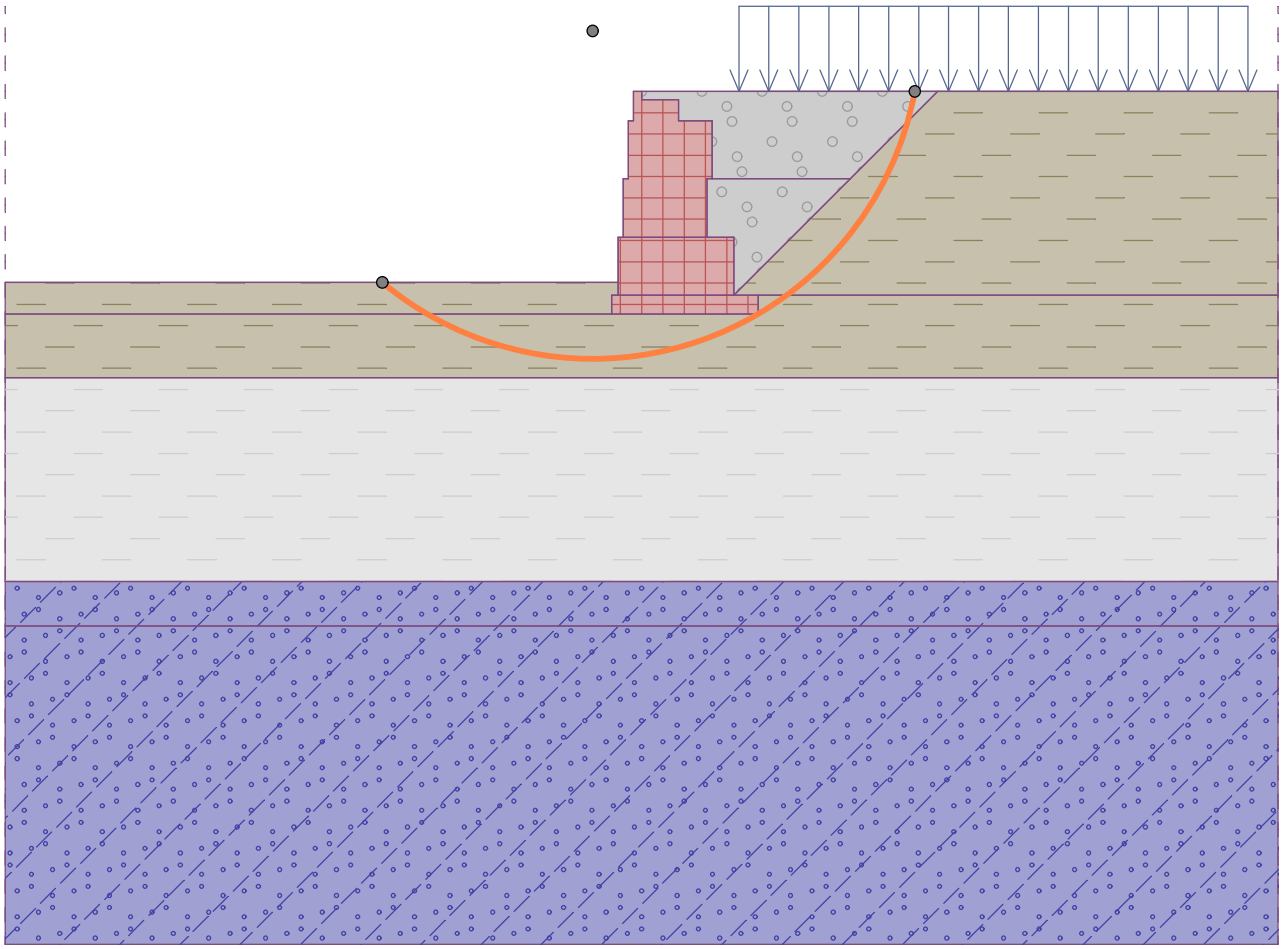

Slope stability analysis

Input data (Construction stage 1)

Project

Settings

Canadian Highway and Bridge Design Code

Stability analysis

Verification methodology : according to LRFD
Earthquake analysis : Standard

Load factors					
Design situation - Service I					
		Minimum		Maximum	
Earth surcharge load (permanent) :	ES =	1.00	[–]	1.00	[–]
Live load surcharge :	LL =	0.00	[–]	1.00	[–]

Resistance factors			
Design situation - Service I			
Resistance factor on stability :	φ_{SS} =	0.65	[–]

Interface

No.	Interface location	Coordinates of interface points [m]					
		x	z	x	z	x	z
1	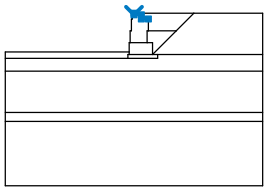	0.00	0.00	0.00	-0.13	0.58	-0.13
		0.58	-0.46	1.11	-0.46		
2	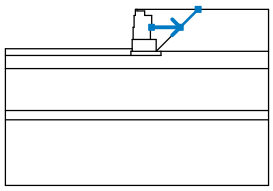	1.11	-1.37	3.28	-1.37	4.65	0.00
3	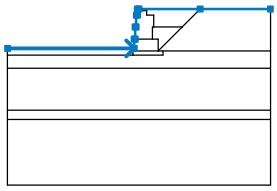	-10.00	-3.00	-0.37	-3.00	-0.37	-2.29
		-0.29	-2.29	-0.29	-1.37	-0.21	-1.37
		-0.21	-0.46	-0.13	-0.46	-0.13	0.00
		0.00	0.00	4.65	0.00	10.00	0.00

No.	Interface location	Coordinates of interface points [m]					
		x	z	x	z	x	z
4	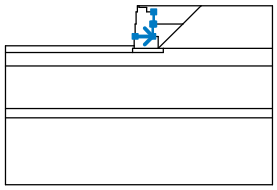	-0.29	-2.29	1.03	-2.29	1.03	-1.37
		1.11	-1.37	1.11	-0.46		
5	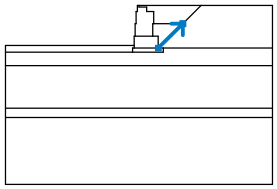	1.45	-3.20	3.28	-1.37		
6	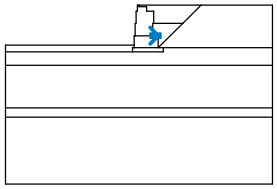	1.03	-2.29	1.45	-2.29		
7	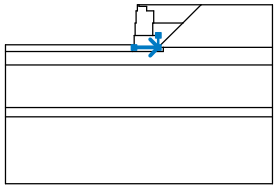	-0.37	-3.20	1.45	-3.20	1.45	-2.29
8	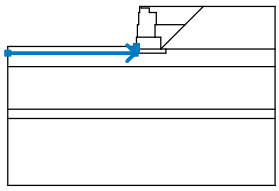	-10.00	-3.50	-0.47	-3.50	-0.47	-3.20
		-0.37	-3.20	-0.37	-3.00		
9	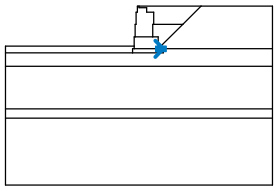	1.45	-3.20	1.83	-3.20		
10	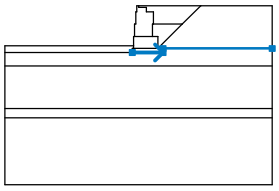	-0.47	-3.50	1.83	-3.50	1.83	-3.20
		10.00	-3.20				

No.	Interface location	Coordinates of interface points [m]					
		x	z	x	z	x	z
11	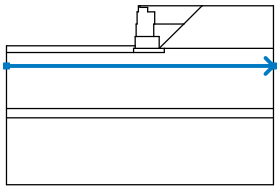	-10.00	-4.50	10.00	-4.50		
12	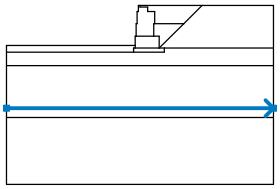	-10.00	-7.70	10.00	-7.70		
13	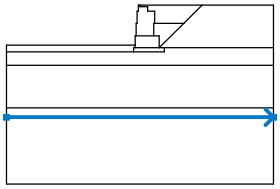	-10.00	-8.40	10.00	-8.40		

Soil parameters - effective stress state

No.	Name	Pattern	ϕ_{ef} [°]	c_{ef} [kPa]	γ [kN/m³]
1	Granular B Type II		36.00	0.00	22.00
2	Silty Clay		33.00	5.00	18.00
3	Grey Silty Clay		33.00	5.00	17.00
4	Glacial Till		33.00	1.00	22.00

Soil parameters - uplift

No.	Name	Pattern	γ_{sat} [kN/m³]	γ_s [kN/m³]	n [–]
1	Granular B Type II		22.00		

No.	Name	Pattern	γ_{sat} [kN/m³]	γ_s [kN/m³]	n [–]
2	Silty Clay		18.00		
3	Grey Silty Clay		17.00		
4	Glacial Till		22.00		

Soil parameters

Granular B Type II

Unit weight : γ = 22.00 kN/m³
Stress-state : effective
Shear strength : Mohr-Coulomb
Angle of internal friction : ϕ_{ef} = 36.00 °
Cohesion of soil : c_{ef} = 0.00 kPa
Saturated unit weight : γ_{sat} = 22.00 kN/m³

Silty Clay

Unit weight : γ = 18.00 kN/m³
Stress-state : effective
Shear strength : Mohr-Coulomb
Angle of internal friction : ϕ_{ef} = 33.00 °
Cohesion of soil : c_{ef} = 5.00 kPa
Saturated unit weight : γ_{sat} = 18.00 kN/m³

Grey Silty Clay

Unit weight : γ = 17.00 kN/m³
Stress-state : effective
Shear strength : Mohr-Coulomb
Angle of internal friction : ϕ_{ef} = 33.00 °
Cohesion of soil : c_{ef} = 5.00 kPa
Saturated unit weight : γ_{sat} = 17.00 kN/m³

Glacial Till

Unit weight : γ = 22.00 kN/m³
Stress-state : effective
Shear strength : Mohr-Coulomb
Angle of internal friction : ϕ_{ef} = 33.00 °
Cohesion of soil : c_{ef} = 1.00 kPa
Saturated unit weight : γ_{sat} = 22.00 kN/m³

Rigid Bodies

No.	Name	Sample	γ [kN/m³]
1	Material of structure		18.85
2	Foundation		25.00

Assigning and surfaces

No.	Surface position	Coordinates of surface points [m]				Assigned soil
		x	z	x	z	
1	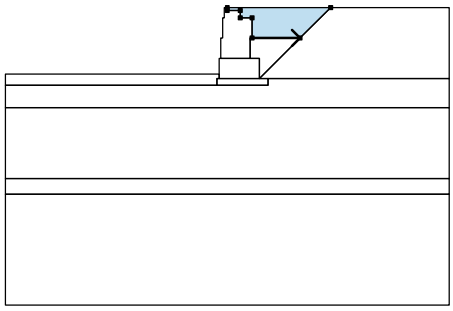	1.11	-1.37	3.28	-1.37	Granular B Type II
		4.65	0.00	0.00	0.00	
		0.00	-0.13	0.58	-0.13	
		0.58	-0.46	1.11	-0.46	
2	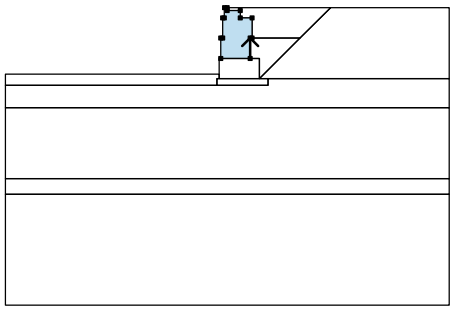	1.03	-2.29	1.03	-1.37	Material of structure
		1.11	-1.37	1.11	-0.46	
		0.58	-0.46	0.58	-0.13	
		0.00	-0.13	0.00	0.00	
		-0.13	0.00	-0.13	-0.46	
		-0.21	-0.46	-0.21	-1.37	
		-0.29	-1.37	-0.29	-2.29	
3	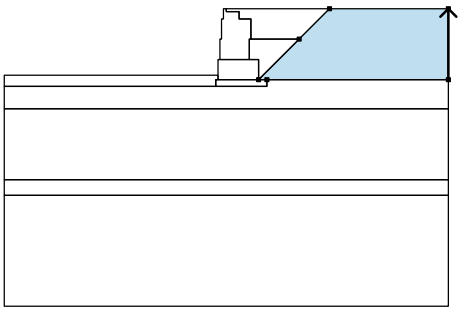	10.00	-3.20	10.00	0.00	Silty Clay
		4.65	0.00	3.28	-1.37	
		1.45	-3.20	1.83	-3.20	

No.	Surface position	Coordinates of surface points [m]				Assigned soil
		x	z	x	z	
4	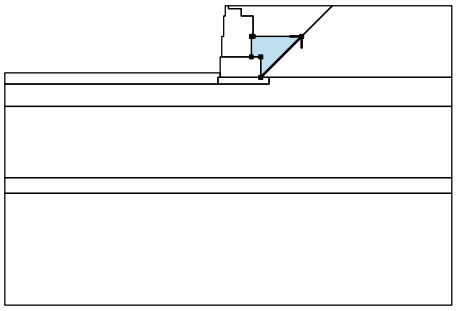	1.45	-3.20	3.28	-1.37	Granular B Type II
		1.11	-1.37	1.03	-1.37	
		1.03	-2.29	1.45	-2.29	
5	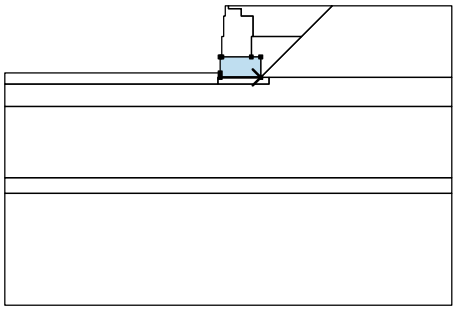	-0.37	-3.20	1.45	-3.20	Material of structure
		1.45	-2.29	1.03	-2.29	
		-0.29	-2.29	-0.37	-2.29	
		-0.37	-3.00			
6	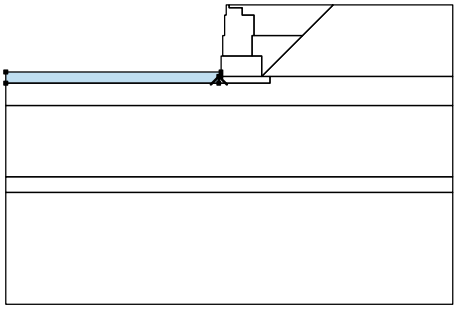	-0.47	-3.50	-0.47	-3.20	Silty Clay
		-0.37	-3.20	-0.37	-3.00	
		-10.00	-3.00	-10.00	-3.50	
7	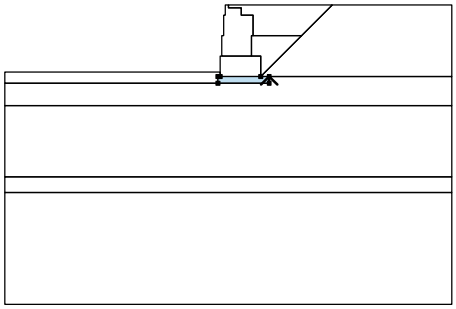	1.83	-3.50	1.83	-3.20	Foundation
		1.45	-3.20	-0.37	-3.20	
		-0.47	-3.20	-0.47	-3.50	

No.	Surface position	Coordinates of surface points [m]				Assigned soil
		x	z	x	z	
8	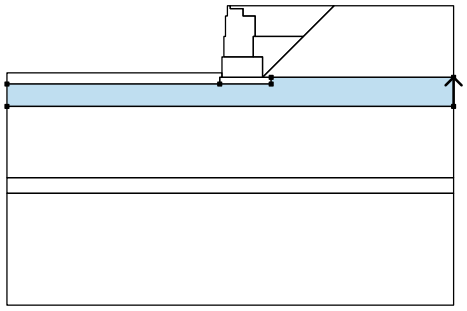	10.00	-4.50	10.00	-3.20	Silty Clay
		1.83	-3.20	1.83	-3.50	
		-0.47	-3.50	-10.00	-3.50	
		-10.00	-4.50			
9	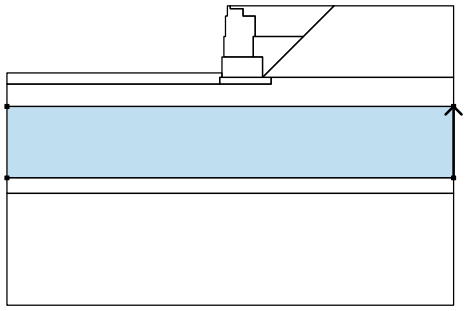	10.00	-7.70	10.00	-4.50	Grey Silty Clay
		-10.00	-4.50	-10.00	-7.70	
10	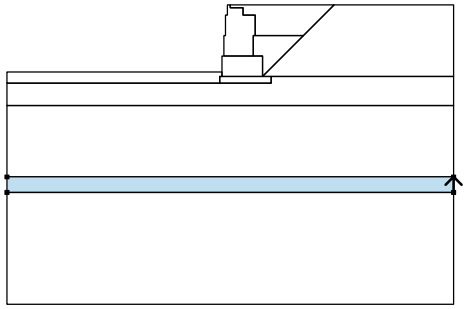	10.00	-8.40	10.00	-7.70	Glacial Till
		-10.00	-7.70	-10.00	-8.40	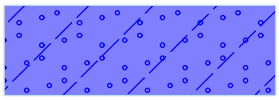
11	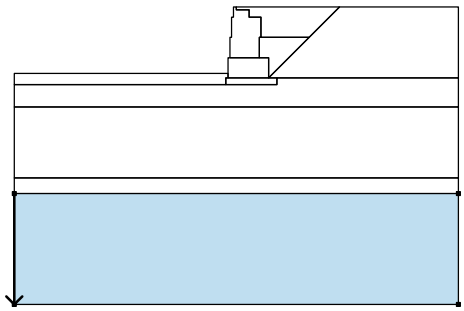	-10.00	-8.40	-10.00	-13.40	Glacial Till
		10.00	-13.40	10.00	-8.40	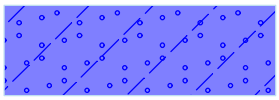

Surcharge

No.	Type	Type of action	Location z [m]	Origin x [m]	Length l [m]	Width b [m]	Slope α [°]	Magnitude q, q_1, f, F, x	q_2, z	unit
1	strip	permanent	on terrain	x = 1.53	l = 8.00		0.00	17.50		kN/m^2

Surcharges

No.	Name
1	Traffic

Water

Water type : No water

Tensile crack

Tensile crack not input.

Earthquake

Horizontal seismic coefficient : K_h = 0.1600
Vertical seismic coefficient : K_v = 0.0000

Settings of the stage of construction

Design situation : Service I

Results (Construction stage 1)

Analysis 1

Circular slip surface

Slip surface parameters							
Center :	x =	-0.98	[m]	Angles :	α_1 =	-32.13	[°]
	z =	2.97	[m]		α_2 =	65.08	[°]
Radius :	R =	7.05	[m]				
The slip surface after optimization.							

Total weight of soil above the slip surface: 379.92 kN/m

Slope stability verification (Bishop)

Sum of active forces : F_a = 211.44 kN/m
Sum of passive forces : F_p = 340.33 kN/m
Factory of Safety: FS = 1.6

Sliding moment : M_a = 1490.64 kNm/m
Resisting moment : M_p = 1559.56 kNm/m
Utilization : 95.6 %

Capacity demand ratio CDR: 1.046

Slope stability ACCEPTABLE

Name : Analysis	Stage - analysis : 1 - 1

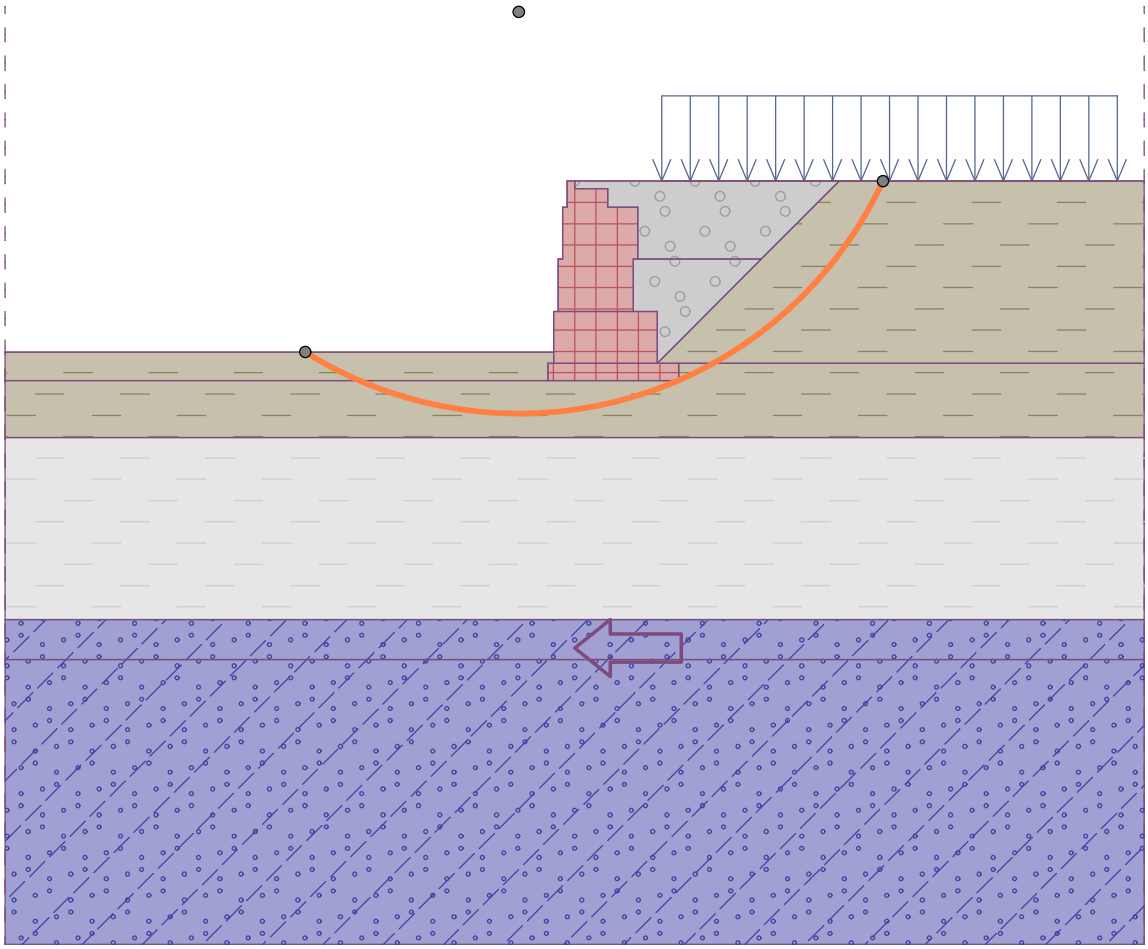

Slope stability analysis

Input data (Construction stage 1)

Project

Settings

Canadian Highway and Bridge Design Code

Stability analysis

Verification methodology : according to LRFD
Earthquake analysis : Standard

Load factors					
Design situation - Strength I					
		Minimum		Maximum	
Earth surcharge load (permanent) :	ES =	0.75	[–]	1.50	[–]
Live load surcharge :	LL =	0.00	[–]	1.75	[–]

Resistance factors			
Design situation - Strength I			
Resistance factor on stability :	φ_{SS} =	0.65	[–]

Interface

No.	Interface location	Coordinates of interface points [m]					
		x	z	x	z	x	z
1	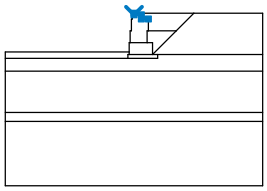	0.00	0.00	0.00	-0.13	0.58	-0.13
		0.58	-0.46	1.11	-0.46		
2	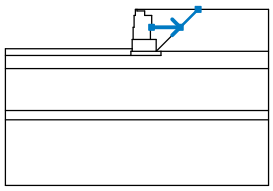	1.11	-1.37	3.28	-1.37	4.65	0.00
3	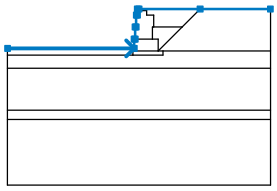	-10.00	-3.00	-0.37	-3.00	-0.37	-2.29
		-0.29	-2.29	-0.29	-1.37	-0.21	-1.37
		-0.21	-0.46	-0.13	-0.46	-0.13	0.00
		0.00	0.00	4.65	0.00	10.00	0.00

No.	Interface location	Coordinates of interface points [m]					
		x	z	x	z	x	z
4	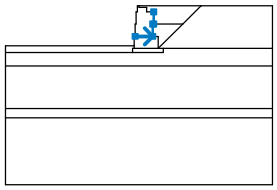	-0.29	-2.29	1.03	-2.29	1.03	-1.37
		1.11	-1.37	1.11	-0.46		
5	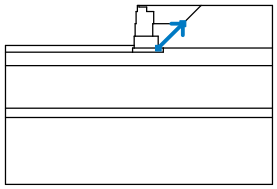	1.45	-3.20	3.28	-1.37		
6	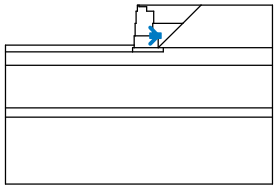	1.03	-2.29	1.45	-2.29		
7	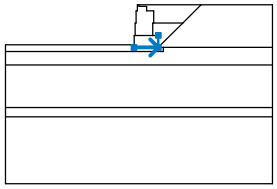	-0.37	-3.20	1.45	-3.20	1.45	-2.29
8	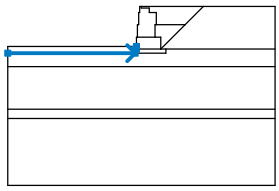	-10.00	-3.50	-0.47	-3.50	-0.47	-3.20
		-0.37	-3.20	-0.37	-3.00		
9	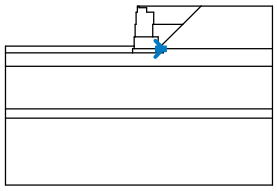	1.45	-3.20	1.83	-3.20		
10	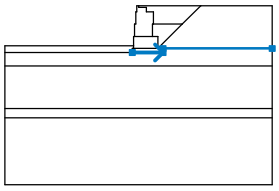	-0.47	-3.50	1.83	-3.50	1.83	-3.20
		10.00	-3.20				

No.	Interface location	Coordinates of interface points [m]					
		x	z	x	z	x	z
11	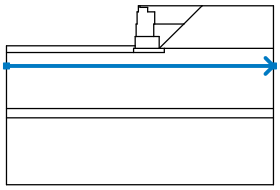	-10.00	-4.50	10.00	-4.50		
12	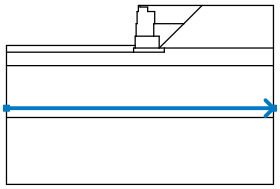	-10.00	-7.70	10.00	-7.70		
13	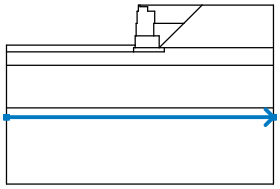	-10.00	-8.40	10.00	-8.40		

Soil parameters - effective stress state

No.	Name	Pattern	ϕ_{ef} [°]	c_{ef} [kPa]	γ [kN/m³]
1	Granular B Type II		36.00	0.00	22.00
2	Silty Clay		33.00	5.00	18.00
3	Grey Silty Clay		33.00	5.00	17.00
4	Glacial Till		33.00	1.00	22.00

Soil parameters - uplift

No.	Name	Pattern	γ_{sat} [kN/m³]	γ_s [kN/m³]	n [–]
1	Granular B Type II		22.00		

No.	Name	Pattern	γ_{sat} [kN/m³]	γ_s [kN/m³]	n [–]
2	Silty Clay		18.00		
3	Grey Silty Clay		17.00		
4	Glacial Till		22.00		

Soil parameters

Granular B Type II

Unit weight : γ = 22.00 kN/m³
Stress-state : effective
Shear strength : Mohr-Coulomb
Angle of internal friction : ϕ_{ef} = 36.00 °
Cohesion of soil : c_{ef} = 0.00 kPa
Saturated unit weight : γ_{sat} = 22.00 kN/m³

Silty Clay

Unit weight : γ = 18.00 kN/m³
Stress-state : effective
Shear strength : Mohr-Coulomb
Angle of internal friction : ϕ_{ef} = 33.00 °
Cohesion of soil : c_{ef} = 5.00 kPa
Saturated unit weight : γ_{sat} = 18.00 kN/m³

Grey Silty Clay

Unit weight : γ = 17.00 kN/m³
Stress-state : effective
Shear strength : Mohr-Coulomb
Angle of internal friction : ϕ_{ef} = 33.00 °
Cohesion of soil : c_{ef} = 5.00 kPa
Saturated unit weight : γ_{sat} = 17.00 kN/m³

Glacial Till

Unit weight : γ = 22.00 kN/m³
Stress-state : effective
Shear strength : Mohr-Coulomb
Angle of internal friction : ϕ_{ef} = 33.00 °
Cohesion of soil : c_{ef} = 1.00 kPa
Saturated unit weight : γ_{sat} = 22.00 kN/m³

Rigid Bodies

No.	Name	Sample	γ [kN/m³]
1	Material of structure		18.85
2	Foundation		25.00

Assigning and surfaces

No.	Surface position	Coordinates of surface points [m]				Assigned soil
		x	z	x	z	
1	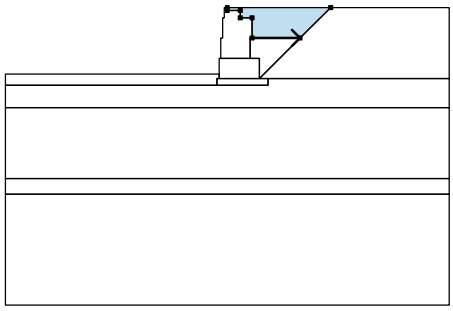	1.11	-1.37	3.28	-1.37	Granular B Type II
		4.65	0.00	0.00	0.00	
		0.00	-0.13	0.58	-0.13	
		0.58	-0.46	1.11	-0.46	
2	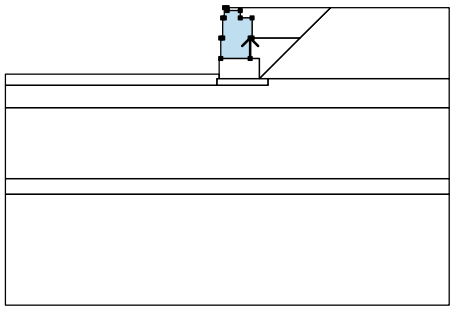	1.03	-2.29	1.03	-1.37	Material of structure
		1.11	-1.37	1.11	-0.46	
		0.58	-0.46	0.58	-0.13	
		0.00	-0.13	0.00	0.00	
		-0.13	0.00	-0.13	-0.46	
		-0.21	-0.46	-0.21	-1.37	
		-0.29	-1.37	-0.29	-2.29	
3	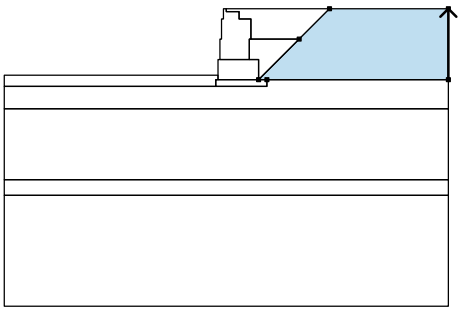	10.00	-3.20	10.00	0.00	Silty Clay
		4.65	0.00	3.28	-1.37	
		1.45	-3.20	1.83	-3.20	

No.	Surface position	Coordinates of surface points [m]				Assigned soil
		x	z	x	z	
4	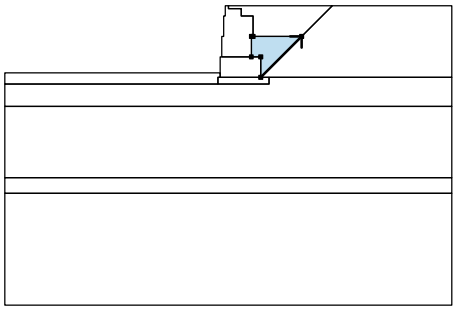	1.45	-3.20	3.28	-1.37	Granular B Type II
		1.11	-1.37	1.03	-1.37	
		1.03	-2.29	1.45	-2.29	
5	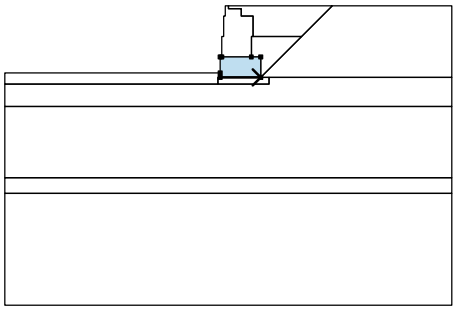	-0.37	-3.20	1.45	-3.20	Material of structure
		1.45	-2.29	1.03	-2.29	
		-0.29	-2.29	-0.37	-2.29	
		-0.37	-3.00			
6	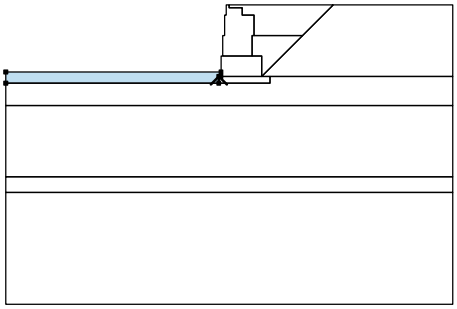	-0.47	-3.50	-0.47	-3.20	Silty Clay
		-0.37	-3.20	-0.37	-3.00	
		-10.00	-3.00	-10.00	-3.50	
7	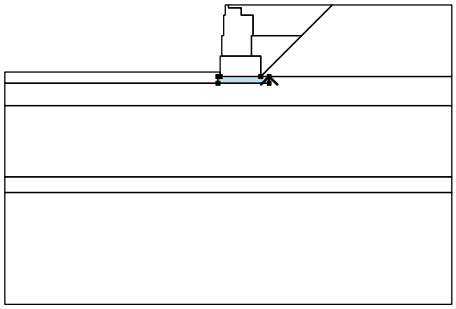	1.83	-3.50	1.83	-3.20	Foundation
		1.45	-3.20	-0.37	-3.20	
		-0.47	-3.20	-0.47	-3.50	

No.	Surface position	Coordinates of surface points [m]				Assigned soil
		x	z	x	z	
8	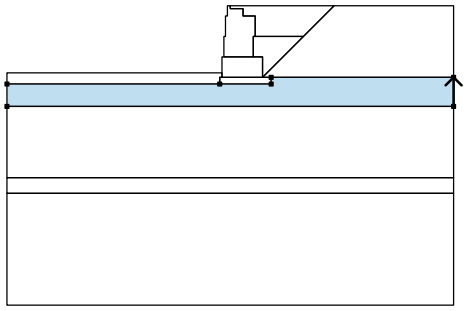	10.00	-4.50	10.00	-3.20	Silty Clay
		1.83	-3.20	1.83	-3.50	
		-0.47	-3.50	-10.00	-3.50	
		-10.00	-4.50			
9	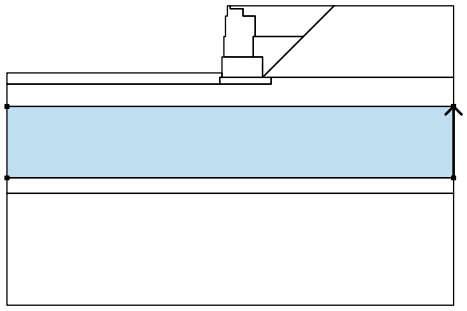	10.00	-7.70	10.00	-4.50	Grey Silty Clay
		-10.00	-4.50	-10.00	-7.70	
10	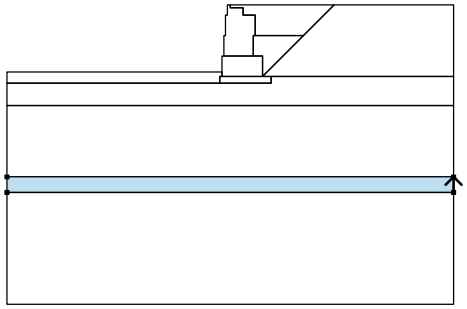	10.00	-8.40	10.00	-7.70	Glacial Till
		-10.00	-7.70	-10.00	-8.40	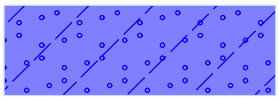
11	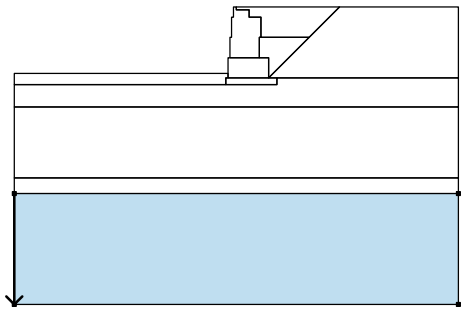	-10.00	-8.40	-10.00	-13.40	Glacial Till
		10.00	-13.40	10.00	-8.40	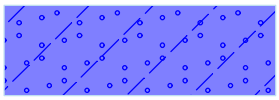

Surcharge

No.	Type	Type of action	Location z [m]	Origin x [m]	Length l [m]	Width b [m]	Slope α [°]	Magnitude q, q_1, f, F, x	q_2, z	unit
1	strip	permanent	on terrain	x = 1.53	l = 8.00		0.00	17.50		kN/m^2

Surcharges

No.	Name
1	Traffic

Water

Water type : No water

Tensile crack

Tensile crack not input.

Earthquake

Earthquake not included.

Settings of the stage of construction

Design situation : Strength I

Results (Construction stage 1)

Analysis 1

Circular slip surface

Slip surface parameters							
Center :	x =	-0.37	[m]	Angles :	α_1 =	-37.76	[°]
	z =	0.85	[m]		α_2 =	79.95	[°]
Radius :	R =	4.87	[m]				
The slip surface after optimization.							

Total weight of soil above the slip surface: 321.52 kN/m

Slope stability verification (Bishop)

Sum of active forces : F_a = 189.31 kN/m

Sum of passive forces : F_p = 306.56 kN/m

Factor of Safety: FS = 1.6

Sliding moment : M_a = 921.92 kNm/m

Resisting moment : M_p = 970.41 kNm/m

Utilization : 95.0 %

Capacity demand ratio CDR: 1.053

Slope stability ACCEPTABLE

Name : Analysis	Stage - analysis : 1 - 1

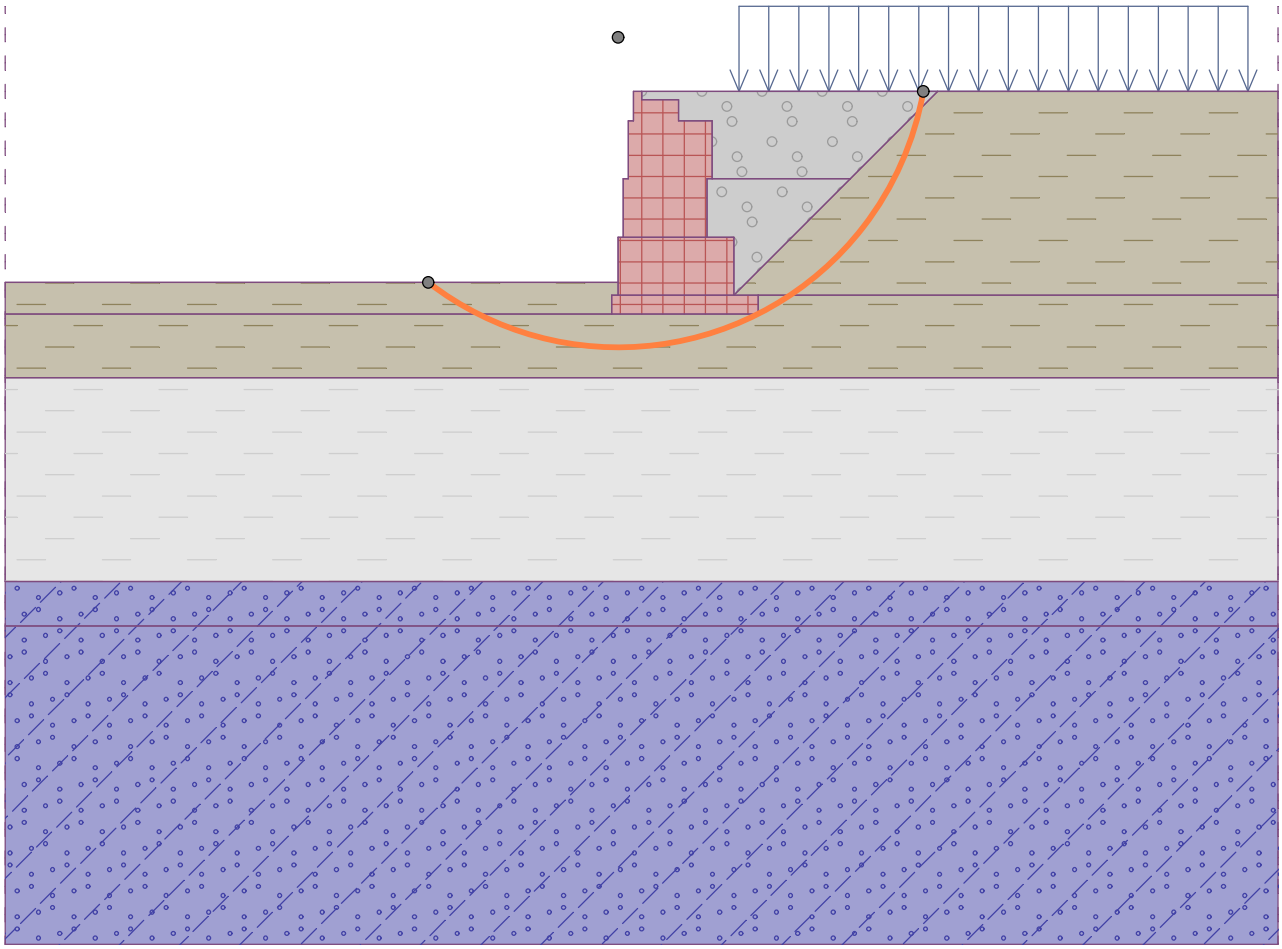

patersongroup

Consulting Engineers

154 Colonnade Road South
Ottawa, Ontario
Canada, K2E 7J5
Tel: (613) 226-7381

Geotechnical Engineering
Environmental Engineering
Hydrogeology
Geological Engineering
Materials Testing
Building Science
Noise and Vibration Studies

www.patersongroup.ca

December 5, 2022
File: PG5036-LET.01 Revision 3

Caivan Communities
302-2934 Baseline Road
Ottawa, Ontario
K2H 1B2

Attention: **Hugo Lalonde**

Subject: **Sump Pump Feasibility Report**
Proposed Residential Development
Conservancy Lands East and West - Ottawa, Ontario

Further to your request, Paterson Group (Paterson) completed a sump pump feasibility study as per City guidelines to determine the use of sump pumps for the proposed Conservancy Lands East and West residential development to be located along Borrisokane Road in the City of Ottawa. A comprehensive sump pump review was previously completed by others for Phase 1 of the proposed development and approved for the use of sump pump systems.

This report provides a discussion on the criteria to design the underside of footing elevations with respect to the existing groundwater table. The current report should be read in conjunction with Paterson Report PG5036-1 Revision 3 dated July 15, 2021 and Paterson Report PG5036-2 Revision 1 dated October 19, 2021.

1.0 Background Information

The field investigations were previously completed by others at the subject site between January 2017 and November 2018. The investigations consisted of 90 boreholes, including the installation of 57 monitoring wells at select borehole locations across the subject site. The test holes were distributed in a manner to provide general coverage of the study area and has been presented in Drawing PG5036-1 - Conservancy Lands East - Test Hole Location Plan and Drawing PG5036-4 - Conservancy Lands West - Test Hole Location Plan attached to this letter report.

Field Survey

All the test hole locations were referenced accurately in the field and the ground surface elevation at the time of the fieldwork and was referenced to geodetic datum. The locations and ground elevations of the test holes, at the time of their respective fieldwork programs, are presented on Drawing PG5036-1 - Test Hole Location Plan and Drawing PG5036-4 - Test Hole Location Plan attached to this letter report.

Subsurface Profile

At the time of the field investigations, the subsurface profile encountered at the test hole locations within the study area generally consisted of a topsoil layer overlying a very stiff to firm silty clay deposit. Glacial till was found to be encountered below the above noted silty clay deposit within the southeastern and western portions of the subject site. The glacial till was observed to consist of a loose to compact silty sand to silty clay with varying amounts of sand, gravel, cobbles and boulders. The silty clay and/or glacial till is inferred to be underlain, at depth, by the bedrock surface.

Reference should be made to the Borehole Records by others attached for the details of the soil profile at each borehole location.

Practical Refusal to DCPT/Augering

Practical refusal to augering was observed during the field investigations at test hole 18-34 at a depth of 9 m below existing ground surface.

Based on available geological mapping, the local bedrock consists of interbedded limestone and dolostone of the Gull River formation with an overburden drift thickness ranging between 5 and 15 m.

Monitoring Well Installation

PVC groundwater monitoring wells were installed in select borehole locations by others to permit monitoring of the groundwater levels subsequent to the completion of the sampling programs. The monitoring wells varied between 38 and 51 mm in diameter. The monitoring wells were also utilised for slug testing by others and Paterson in order to determine the hydraulic conductivity of the underlying silty clay deposit. The monitoring wells were constructed with a 1.5 m long screen, below the anticipated underside of footing elevations. Select borehole locations included both a shallow well and a deep well. Generally, both wells were embedded within the underlying silty clay at depths varying per location. It should be noted the deep wells at borehole location 18-07 and 18-34 were screened in the glacial till deposit underlying the silty clay. Specific details of the installation of each monitoring well are further included in the Borehole Records by others and attached to the current letter report.

2.0 Groundwater Review

The groundwater levels on the site were shown to range from 1.8 to 3.2 m based on the desiccated silty clay crust observed within the boreholes completed by others. The silty clay crust ranged from 2.3 to 3.7 m depth at the borehole locations. The soil parameters observed would consist of the colour and consistency of the samples. The measured parameters would consist of the moisture content levels of the samples and the apparent shear strength from the Standard Penetration Test (SPT) values.

Based on the City of Ottawa Geotechnical Investigation Guidelines, it is understood that groundwater levels can be estimated from the physical parameters of the soil. The shear strength, oxidation, moisture content and physical consistency of the onsite silty clays provide significant evidence of historical desiccation of the upper silty clay deposit. Based on the physical parameters that were measured during the geotechnical investigations, the long-term groundwater elevation within Conservancy East is estimated to range between 88.3 and 89.1 m, while Conservancy West is estimated to be vary from 88.5 and 90 m. Based on our experience with groundwater in Ottawa clays, the seasonal high groundwater table can be conservatively expected 0.5 m above the long-term groundwater table in the pre-development stage. Long-term groundwater contour mapping has been presented in Paterson Drawing PG5036-10 and PG5036-12 attached to the current report.

It should also be noted that groundwater levels can fluctuate both seasonally and in conjunction with precipitation events. Therefore, the groundwater levels could vary at the time of construction.

3.0 Groundwater Monitoring Program

Select monitoring wells were equipped with a Van Essen Instrument Mini-Diver Water Level Logger to monitor fluctuations in the groundwater levels during the spring melt as part of a review for the use of sump pumps within the study area of the proposed development. In addition, a Van Essen Instruments Baro-Diver was installed in borehole 17-32 to monitor changes in atmospheric pressure.

The Mini-Divers were programmed to continuously measure and record groundwater levels throughout the study area during the pre-construction stages of the development at a rate of 1 reading every 12 hours. The results of the groundwater fluctuations and correlated precipitation events for each monitoring well location between April 29, 2020 and April 12, 2021 have been summarized in Figure 1 through Figure 17 attached to the current letter report.

Groundwater Monitoring Results

The data presented in Figure 1 through Figure 17 illustrate the collected groundwater elevations. The readings measured within the monitoring wells varied from above existing ground surface to approximately 2.1 m below ground surface. The low and high groundwater elevation measurements at each well location between April 29, 2020 and April 12, 2021 are summarized in Table 1 below.

Table 1 - Recorded Groundwater Elevations

Borehole with monitoring Well	Ground Surface Elevation (m)	Low Groundwater Elevation (m)	High Groundwater Elevation (m)	Difference in Groundwater Depth (m)
17-11	91.19	90	90.9	0.9
17-18s	91.4	90.2	91.5	1.3
17-20s	91.03	89.7	90.9	1.2
17-25s	91.09	89	91.1	2.1
17-26	91.54	90.1	91.4	1.3
17-32s	91.05	89.5	90.6	1.1
17-36	91.35	90.2	91.8	1.6
17-38s	91.24	90.1	91.2	1.1
17-43	91.52	90.2	91.7	1.5
17-46s	91.63	89.8	91.6	1.8
17-52	91.43	90.2	91.5	1.3
18-04s	91.28	90	91.7	1.7
18-06	91.25	90.2	91.6	1.4
18-08	91.48	90.1	91.5	1.4
18-18s	91.54	90.1	91.7	1.6
18-19	91.26	89.5	90.9	1.4
18-22s	91.31	90.1	91.4	1.3

Based on our analysis of the data logger groundwater readings between April 29, 2020 and April 12, 2021, groundwater fluctuations can be observed with a difference in elevation between the low and high readings ranging from 0.9 to 2.1 m. The low groundwater level was noted at an average elevation of 89.9 m throughout the monitoring period. During the spring melt season and heavy rain events, the groundwater table was found to be at an average elevation of 91.4 m, with an average fluctuation of approximately 1.4 m.

Upon analysing the data collected from the monitoring wells and the subsequent rain events, groundwater reading spikes occurred within short periods of time after each rain event followed by a rapid lowering of the groundwater readings over the following days. It should be noted that the spiking groundwater readings are expected to be the result of the accumulation of rain water within the fissures of the desiccated clay layer (weathered crust), which provides the collected water access to the shallow monitoring well screens. This is an indication that the groundwater level readings have been influenced by temporarily 'perched' groundwater, which is typical of monitoring well data within low permeability clay deposits, where water from rain events or spring melt tend to be maintained within the upper portion of the subsoil profile until either sheet drainage or evapotranspiration can eliminate the collected water. As such, it is expected that the groundwater levels will be encountered at greater depths based on field observations during the geotechnical investigations.

4.0 Hydraulic Conductivity Testing

Following the completion of the slug testing by Paterson and others, the test data was analyzed as per the method set out by Hvorslev (1951). Assumptions inherent in the Hvorslev method include a homogeneous and isotropic aquifer of infinite extent with zero-storage assumption, and a screen length significantly greater than the monitoring well diameter. The assumption regarding aquifer storage is considered to be appropriate for groundwater flow through the overburden aquifer. The assumption regarding screen length and well diameter is considered to be met based on a screen length of 1.5 m and a diameter of 0.05 m. While the idealized assumptions regarding aquifer extent, homogeneity, and isotropy are not strictly met in this case (or in any real-world situation), it has been our experience that the Hvorslev method produces effective point estimates of hydraulic conductivity in conditions similar to those encountered at the subject site.

Hvorslev analysis is based on the line of best fit through the field data (hydraulic head recovery vs. time), plotted on a semi-logarithmic scale. In cases where the initial hydraulic head displacement is known with relative certainty, such as in this case where a physical slug has been introduced, the line of best fit is considered to pass through the origin.

Based on the above test methods, the monitoring wells screened in the silty clay displayed hydraulic conductivity values ranging between **5.0×10^{-8} and 2.0×10^{-5} m/sec**. The values measured within the monitoring wells are generally consistent with similar material Paterson has encountered on other sites and typical published values for silty clay. These values typically range from 1×10^{-9} to 1×10^{-7} m/sec. Testing results greater than the typical range can be attributed to intermittent silty sand layers encountered in select boreholes. The results of the hydraulic conductivity testing completed by Paterson and others have been attached to the current letter report.

5.0 Summary and Recommendations

It is understood that the proposed residential buildings within the subject site will include a basement level. It is also understood that sump pump systems are proposed for the buildings within the study area of the subject development to provide an outlet for stormwater and spring melt water collected from the perimeter foundation drainage system.

Groundwater Table vs USF Elevations

Based on the above discussion, the seasonalyl high groundwater table for Conservancy East is anticipated to be at elevations ranging between 88.8 and 89.6 m, while Conservancy West is anticipated to vary between 89 and 90.5 m. Paterson reviewed the following grading plans prepared by DSEL as part of our assessment:

- DSEL - Barrhaven Conservancy East, Conceptual Grading Plan, Project No. 16-891, Drawing No. 01, dated July 2021.
- DSEL - Barrhaven Conservancy, Conceptual Grading Plan, Project No. 20-1226, Drawing No. 01, dated October 2021.
- DSEL - Barrhaven Conservancy East; Phase 2, 3 and Jock River, Grading Plan, Project No. 20-1180, Sheet No. 93 to 106, dated April 22, 2022.

Where detailed grading has not been provided for the proposed development (west of Borrisokane Road), DSEL has noted that the proposed underside of footing (USF) will be placed at an approximate depth ranging between 1.9 and 2.2 m below the centre line of the proposed roads identified in the above noted conceptual grading plans. Based on discussions with DSEL, it is further understood that the USFs within Conservancy West are anticipated to be placed approximately 1.9 m below the centre line of road, while Conservancy East (west of Borrisokane Road) are expected to range between 1.9 and 2.2 m below centre line of road. For the purpose of this study, a conservative USF depth of 2.2 m below centre line of road has been considered for Conservancy East (west of Borrisokane Road).

Based on the detailed grading and conceptual grading plans noted above, the USF values for Conservancy East have been estimated at an elevation of 90.16 or higher. As such, adequate separation between the USF and seasonally high groundwater table has been provided. Based on the conceptual grading plan provided for Conservancy West, the USF values are anticipated to range from 92 m within the north portion of the development to 90.5 m towards the south. Upon reviewing the expected groundwater levels throughout the site, an approximate separation between the USF and seasonally high groundwater table has been noted to be approximately 1.1 to 2.1 m. Based on our review of the proposed grading and groundwater conditions, the proposed USF values for Conservancy West are considered to have sufficient separation from the seasonally high groundwater table.

Sump Pumps (Study Area)

It should be noted that based on the Technical Bulletin ISTB-2018-04 and ISTB-2019-02 issued by the City of Ottawa regarding installation of sump pumps, for typical sites, a minimum 300 mm vertical separation is recommended between the design underside of footing elevation and the seasonal high groundwater level. To further support our conclusion of the groundwater table, the development was confirmed to meet the minimum requirements for the following items as per Appendix 8 of the above noted technical bulletin:

- ❑ Clay Continuity within the Site
- ❑ Estimation of Seasonal High Groundwater Table
- ❑ Hydraulic Conductivity of the Underlying Silty Clay
- ❑ The Groundwater Ingress Rate

Clay Continuity

The boreholes completed within the study area of the subject site are in conformance with the City of Ottawa borehole spacing guidelines. The native silty clay soils within the study area are considered to be laterally continuous. The boreholes within the study area of the subject site identify a silty clay deposit at the borehole locations at similar elevations throughout. Therefore, the silty clay deposit is considered to be laterally continuous across the study area of the proposed residential development.

Seasonal High Groundwater Level

As indicated in Section 2, the long-term groundwater elevation within Conservancy East is estimated to range between 88.3 and 89.1 m, while Conservancy West is estimated to be vary from 88.5 and 90 m. Based on our experience with groundwater in Ottawa clays, the seasonal high groundwater table can be expected to be between 0.5 m above the long-term groundwater table in the pre-development stage.

Based on our review of the latest grading plans provided and groundwater conditions, **all proposed underside of footing elevations across the study area of the development will be above the expected seasonal high groundwater table**. It is important to note that the groundwater levels recorded for the site are considered pre-development groundwater levels. From a geotechnical perspective, the pre-development groundwater levels are usually higher than post development groundwater levels and highly dependent on the inverts of the proposed site servicing pipes. Therefore, no increase in the seasonal high groundwater levels are expected.

Permeability of Soils and Groundwater Ingress Rate

Based on slug testing (falling head) completed within the subject site, the hydraulic conductivity values of the silty clay ranged between 5.0×10^{-8} and 2.0×10^{-5} m/sec, similar to the values in support of the previously approved sump pump study for Phase 1 of the proposed development.

Based on the subsoil profile below the proposed footings, the groundwater ingress rate was calculated to be less than 30,000 L/day which is considered to be very low in comparison with the minimum pump capacity of 0.9 L/s as per the above noted sump pump design Bulletin. Also, due to the characteristics of the underlying silty clay, the groundwater levels will not impact the performance of a sump pump due to the low permeability of the soils.

Based on the above, the sump pumps are not expected to be overloaded and/or continuously running. **As such, the minimum design requirements for the main sump pump system and the backup pump battery will be achieved for the estimated groundwater rate of ingress under worst case scenarios.**

Backfill Recommendations

It should also be noted that the backfill used against the foundation walls should consist of workable site excavated silty clay. All surfaces adjacent to the proposed buildings should be shaped to shed water away from the building's foundation. All the sump pump installations should be inspected and approved by Paterson at the time of installation.

6.0 Conclusion

Based on our observations and available design details, the subject area identified in Drawing PG5036-1 and PG5036-4 - Test Hole Location Plan is considered to have met the requirements detailed in the Technical Bulletin ISTB-2018-04 and ISTB-2019-02 issued by the City of Ottawa regarding installation of sump pumps.

We trust that this information satisfies your requirements.

Best Regards,

Paterson Group Inc.

Nicholas Zulinski, P.Geo, géo.

Michael S. Killam, P.Eng.

Attachments:

- ❑ Borehole Records by Others
- ❑ Drawing PG5036-1 - Test Hole Location Plan
- ❑ Drawing PG5036-4 - Test Hole Location Plan
- ❑ Drawing PG5036-10 - Approximate Long-Term Groundwater Table Plan (East)
- ❑ Drawing PG5036-12 - Approximate Long-Term Groundwater Table Plan (West)
- ❑ Figure 1 through Figure 17 - Groundwater Monitoring Levels vs Precipitation Data
- ❑ Hydraulic Conductivity Analysis

PROJECT: 1771847

RECORD OF BOREHOLE: 17-06

SHEET 1 OF 1

LOCATION: N 5013111.2 ;E 361966.0

BORING DATE: January 31, 2017

DATUM: CGVD28

SAMPLER HAMMER, 64kg; DROP, 760mm

PENETRATION TEST HAMMER, 64kg; DROP, 760mm

DEPTH SCALE METRES	BORING METHOD	SOIL PROFILE: DESCRIPTION	STRATA PLOT	ELEV. / DEPTH (m)	SAMPLES: NUMBER	TYPE	BLOWS/0.30m	DYNAMIC PENETRATION RESISTANCE, BLOWS/0.3m (20 40 60 80) / SHEAR STRENGTH Cu, kPa (nat V. + Q - ●; rem V. ⊕ U - ○) (20 40 60 80)	HYDRAULIC CONDUCTIVITY, k, cm/s (10^{-6} 10^{-5} 10^{-4} 10^{-3}) / WATER CONTENT PERCENT (Wp ⊖W WI; 20 40 60 80)	ADDITIONAL LAB. TESTING	PIEZOMETER OR STANDPIPE INSTALLATION
		GROUND SURFACE		91.22							
0	Power Auger, 200 mm Diam. (Hollow Stem)	TOPSOIL - (SM) SILTY SAND; dark brown; moist		0.00 / 0.08							
		(CL/CI/CH) SILTY CLAY to CLAY; grey brown, contains silt layers (WEATHERED CRUST); cohesive, w>PL, very stiff to firm									
1					1	SS	4				
					2	SS	1				
2								⊕ +			
		(CI/CH) SILTY CLAY to CLAY; grey with black organic mottling; cohesive, w>PL, soft to firm		88.48 / 2.74				⊕ +			
3					3	SS	WH				
4								⊕ + / ⊕ +			
					4	TP	PH				
5								⊕ + / ⊕ +			
6					5	SS	WH				
7								⊕ +			
		End of Borehole		83.60 / 7.62				⊕ +			
8											
9											
10											

DEPTH SCALE

1 : 50

Golder Associates

LOGGED: DG

CHECKED: SD

MIS-BHS 001 1771847.GPJ GAL-MIS.GDT 09/12/17 JEM

PROJECT: 1771847

RECORD OF BOREHOLE: 17-07

SHEET 1 OF 1

LOCATION: N 5013270.1 ;E 362250.9

BORING DATE: January 31, 2017

DATUM: CGVD28

SAMPLER HAMMER, 64kg; DROP, 760mm

PENETRATION TEST HAMMER, 64kg; DROP, 760mm

DEPTH SCALE METRES	BORING METHOD	SOIL PROFILE: DESCRIPTION	STRATA PLOT	ELEV. / DEPTH (m)	SAMPLES: NUMBER	TYPE	BLOWS/0.30m
		GROUND SURFACE		91.56			
0	Power Auger, 200 mm Diam. (Hollow Stem)	TOPSOIL - (SM) SILTY SAND; dark brown; moist		0.00 / 0.10			
		(CL/CI/CH) SILTY CLAY to CLAY; grey brown, contains silty sand layers (WEATHERED CRUST); cohesive, w>PL, very stiff to firm					
1					1	SS	4
					2	SS	1
2							
		(CI/CH) SILTY CLAY to CLAY; grey with black organic mottling; cohesive, w>PL, soft to firm		88.82 / 2.74			
3					3	SS	WH
4							
5					4	SS	WH
6							
7					5	SS	WH
		End of Borehole		83.94 / 7.62			
8							
9							
10							

DYNAMIC PENETRATION RESISTANCE, BLOWS/0.3m: 20, 40, 60, 80

SHEAR STRENGTH Cu, kPa: nat V. + Q - ●; rem V. ⊕ U - ○; 20, 40, 60, 80

HYDRAULIC CONDUCTIVITY, k, cm/s: 10^{-6}, 10^{-5}, 10^{-4}, 10^{-3}

WATER CONTENT PERCENT: Wp ⊢—○—⊣ Wl; W; 20, 40, 60, 80

ADDITIONAL LAB. TESTING

PIEZOMETER OR STANDPIPE INSTALLATION

DEPTH SCALE

1 : 50

Golder Associates

LOGGED: DG

CHECKED: SD

MIS-BHS 001 1771847.GPJ GAL-MIS.GDT 09/12/17 JEM

PROJECT: 1771847

RECORD OF BOREHOLE: 17-07A

SHEET 1 OF 1

LOCATION: 2 m North of 17-07

BORING DATE: January 31, 2017

DATUM: CGVD28

SAMPLER HAMMER, 64kg; DROP, 760mm

PENETRATION TEST HAMMER, 64kg; DROP, 760mm

DEPTH SCALE METRES	BORING METHOD	SOIL PROFILE: DESCRIPTION	STRATA PLOT	ELEV. / DEPTH (m)	SAMPLES: NUMBER	TYPE	BLOWS/0.30m	DYNAMIC PENETRATION RESISTANCE, BLOWS/0.3m (20 40 60 80) / SHEAR STRENGTH Cu, kPa (nat V. + Q - ●, rem V. ⊕ U - ○) (20 40 60 80)	HYDRAULIC CONDUCTIVITY, k, cm/s (10^{-6} 10^{-5} 10^{-4} 10^{-3}) / WATER CONTENT PERCENT (Wp ⊖W Wl) (20 40 60 80)	ADDITIONAL LAB. TESTING	PIEZOMETER OR STANDPIPE INSTALLATION
		GROUND SURFACE		91.56							
0	Power Auger, 200 mm Diam. (Hollow Stem)	For stratigraphy refer to RECORD OF BOREHOLE 17-07		0.00							
1											
2											
3											
4											
5											
6				85.46							
		(CI/CH) SILTY CLAY to CLAY; grey with black organic mottling; cohesive, w>PL, soft to firm		6.10 / 84.90	1	TP	PH			C	
		End of Borehole		6.66							
7											
8											
9											
10											

DEPTH SCALE

1 : 50

Golder Associates

LOGGED: DG

CHECKED: SD

PROJECT: 1771847

RECORD OF BOREHOLE: 17-08

SHEET 1 OF 1

LOCATION: N 5012981.2 ;E 362191.5

BORING DATE: February 3, 2017

DATUM: CGVD28

SAMPLER HAMMER, 64kg; DROP, 760mm

PENETRATION TEST HAMMER, 64kg; DROP, 760mm

DEPTH SCALE METRES	BORING METHOD	SOIL PROFILE: DESCRIPTION	STRATA PLOT	ELEV. / DEPTH (m)	SAMPLES: NUMBER	TYPE	BLOWS/0.30m	DYNAMIC PENETRATION RESISTANCE, BLOWS/0.3m (20 40 60 80)	SHEAR STRENGTH Cu, kPa (nat V. + Q - ●; rem V. ⊕ U - ○) (20 40 60 80)	HYDRAULIC CONDUCTIVITY, k, cm/s (10^{-6} 10^{-5} 10^{-4} 10^{-3}) / WATER CONTENT PERCENT (Wp ⊢—○W—⊣ Wl) (20 40 60 80)	ADDITIONAL LAB. TESTING	PIEZOMETER OR STANDPIPE INSTALLATION
		GROUND SURFACE		91.15								
0	Power Auger, 200 mm Diam. (Hollow Stem)	TOPSOIL - (SM) SILTY SAND; dark brown; moist		0.00								
		(CL/CI/CH) SILTY CLAY to CLAY; grey brown, contains silt layers (WEATHERED CRUST); cohesive, w>PL, very stiff to stiff		0.10								
1					1	SS	3					
					2	SS	1					
2												
		(CI/CH) SILTY CLAY to CLAY; grey with black organic mottling; cohesive, w>PL, soft to firm		88.41 / 2.74								
3					3	SS	WH					
4												
5					4	SS	WH					
6					5	TP	PH				C	
7												
		End of Borehole		83.53 / 7.62								
8												
9												
10												

DEPTH SCALE

1 : 50

Golder Associates

LOGGED: DG

CHECKED: SD

MIS-BHS 001 1771847.GPJ GAL-MIS.GDT 09/12/17 JEM

PROJECT: 1771847

RECORD OF BOREHOLE: 17-10

SHEET 1 OF 1

LOCATION: N 5012858.2 ;E 362391.4

BORING DATE: February 15, 2017

DATUM: CGVD28

SAMPLER HAMMER, 64kg; DROP, 760mm

PENETRATION TEST HAMMER, 64kg; DROP, 760mm

DEPTH SCALE METRES	BORING METHOD	SOIL PROFILE DESCRIPTION	STRATA PLOT	ELEV. DEPTH (m)	SAMPLES NUMBER	TYPE	BLOWS/0.30m	DYNAMIC PENETRATION RESISTANCE, BLOWS/0.3m (20 40 60 80) / SHEAR STRENGTH Cu, kPa (nat V. + Q - ●; rem V. ⊕ U - ○) (20 40 60 80)	HYDRAULIC CONDUCTIVITY, k, cm/s (10^{-6} 10^{-5} 10^{-4} 10^{-3}) / WATER CONTENT PERCENT (Wp ⊢—○W—⊣ Wl) (20 40 60 80)	ADDITIONAL LAB. TESTING	PIEZOMETER OR STANDPIPE INSTALLATION
		GROUND SURFACE		91.21							
0	Power Auger, 200 mm Diam. (Hollow Stem)	TOPSOIL - (ML) sandy SILT; dark brown; moist		0.00							
		(CL/CI/CH) SILTY CLAY to CLAY; grey brown, contains silt layers (WEATHERED CRUST); cohesive, w>PL, very stiff to firm		0.15	1	GRAB	-				
1					2	SS	3				
					3	SS	1				
2					4	SS	WH				
		(CI/CH) SILTY CLAY to CLAY; grey with black organic mottling; cohesive, w>PL, soft fo firm		88.31 / 2.90							
3					5	SS	WH				
4											
5					6	SS	WH				
6											
					7	SS	WH				
7											
		End of Borehole		83.59 / 7.62							
8											
9											
10											

DEPTH SCALE

1 : 50

Golder Associates

LOGGED: DG

CHECKED: SD

MIS-BHS 001 1771847.GPJ GAL-MIS.GDT 09/12/17 JEM

PROJECT: 1771847

RECORD OF BOREHOLE: 17-11

SHEET 1 OF 1

LOCATION: N 5013105.9 ;E 362455.0

BORING DATE: February 15, 2017

DATUM: CGVD28

SAMPLER HAMMER, 64kg; DROP, 760mm

PENETRATION TEST HAMMER, 64kg; DROP, 760mm

DEPTH SCALE METRES	BORING METHOD	SOIL PROFILE DESCRIPTION	STRATA PLOT	ELEV. / DEPTH (m)	SAMPLES NUMBER	TYPE	BLOWS/0.30m	DYNAMIC PENETRATION RESISTANCE, BLOWS/0.3m (20 40 60 80) / SHEAR STRENGTH Cu, kPa (nat V. + Q - ●, rem V. ⊕ U - ○) (20 40 60 80)	HYDRAULIC CONDUCTIVITY, k, cm/s (10^{-6} 10^{-5} 10^{-4} 10^{-3}) / WATER CONTENT PERCENT (Wp ⊖W WI) (20 40 60 80)	ADDITIONAL LAB. TESTING	PIEZOMETER OR STANDPIPE INSTALLATION
		GROUND SURFACE		91.19							
0	Power Auger 200 mm Diam. (Hollow Stem)	TOPSOIL - (SM) SILTY SAND; dark brown; moist		0.00 / 0.08							Bentonite Seal
		(CL/CI/CH) SILTY CLAY to CLAY; grey brown (WEATHERED CRUST); cohesive, w>PL, very stiff to firm									
1					1	SS	4				
					2	SS	2				
2											Bentonite and Cuttings Mix
					3	SS	WH				
				88.29							
3		(CI/CH) SILTY CLAY to CLAY; grey with black organic mottling; cohesive, w>PL, soft to firm		2.90							
					4	SS	WH				Bentonite Seal
											Silica Sand
4								⊕ +			
								⊕ +			51 mm Diam. PVC #10 Slot Screen
					5	SS	WH				
5											Silica Sand
								⊕ +			
								⊕ +			
6											
					6	SS	WH				Native Backfill
7								⊕ +			
								⊕ +			
				83.57							
		End of Borehole		7.62				⊕ +			
8											WL in Screen at Elev. 90.46 m on February 21, 2017
9											
10											

DEPTH SCALE

1 : 50

Golder Associates

LOGGED: DG

CHECKED: SD

PROJECT: 1771847

RECORD OF BOREHOLE: 17-12

SHEET 1 OF 1

LOCATION: N 5013250.9 ;E 362714.3

BORING DATE: February 15, 2017

DATUM: CGVD28

SAMPLER HAMMER, 64kg; DROP, 760mm

PENETRATION TEST HAMMER, 64kg; DROP, 760mm

DEPTH SCALE METRES	BORING METHOD	SOIL PROFILE: DESCRIPTION	STRATA PLOT	ELEV. / DEPTH (m)	SAMPLES: NUMBER	TYPE	BLOWS/0.30m	DYNAMIC PENETRATION RESISTANCE, BLOWS/0.3m (20 40 60 80) / SHEAR STRENGTH Cu, kPa (nat V. + Q - ●; rem V. ⊕ U - ○) (20 40 60 80)	HYDRAULIC CONDUCTIVITY, k, cm/s (10^{-6} 10^{-5} 10^{-4} 10^{-3}) / WATER CONTENT PERCENT (Wp — W — Wl; 20 40 60 80)	ADDITIONAL LAB. TESTING	PIEZOMETER OR STANDPIPE INSTALLATION
		GROUND SURFACE		91.47							
0	Power Auger, 200 mm Diam. (Hollow Stem)	TOPSOIL - (SM) SILTY SAND; dark grey; moist		0.00 / 0.08							
		(CL/CI/CH) SILTY CLAY to CLAY; grey brown, contains sandy silt to silty sand layers (WEATHERED CRUST); cohesive, w>PL, very stiff to firm									
1					1	SS	4				
					2	SS	2				
2											
		(CI/CH) SILTY CLAY to CLAY, with sandy silt layers; grey with black organic mottling; cohesive, w>PL, firm		88.73 / 2.74							
3					3	SS	WH				
4											
5					4	SS	WH				
6											
					5	SS	WH				
7											
		End of Borehole		83.85 / 7.62							
8											
9											
10											

DEPTH SCALE

1 : 50

Golder Associates

LOGGED: DG

CHECKED: SD

MIS-BHS 001 1771847.GPJ GAL-MIS.GDT 09/12/17 JEM

PROJECT: 1771847

RECORD OF BOREHOLE: 17-13

SHEET 1 OF 1

LOCATION: N 5013391.6 ;E 362965.1

BORING DATE: February 15, 2017

DATUM: CGVD28

SAMPLER HAMMER, 64kg; DROP, 760mm

PENETRATION TEST HAMMER, 64kg; DROP, 760mm

DEPTH SCALE METRES	BORING METHOD	SOIL PROFILE DESCRIPTION	STRATA PLOT	ELEV. DEPTH (m)	SAMPLES NUMBER	TYPE	BLOWS/0.30m	DYNAMIC PENETRATION RESISTANCE, BLOWS/0.3m (20 40 60 80) / SHEAR STRENGTH Cu, kPa (nat V. + Q - ●; rem V. ⊕ U - ○) (20 40 60 80)	HYDRAULIC CONDUCTIVITY, k, cm/s (10^{-6} 10^{-5} 10^{-4} 10^{-3}) / WATER CONTENT PERCENT (Wp ⊢—○W—⊣ Wl) (20 40 60 80)	ADDITIONAL LAB. TESTING	PIEZOMETER OR STANDPIPE INSTALLATION
		GROUND SURFACE		91.68							
0	Power Auger 200 mm Diam. (Hollow Stem)	TOPSOIL - (SM) SILTY SAND; dark brown; moist		0.00							
		(CL/CI/CH) SILTY CLAY to CLAY; grey brown (WEATHERED CRUST); cohesive, w>PL, very stiff to stiff		0.08							
1					1	SS	4				
					2	SS	1				
2											
		(CI/CH) SILTY CLAY to CLAY; grey with black organic mottling; cohesive, w>PL, firm		88.94 2.74							
3					3	TP	PH				
4											
					4	SS	WH				
5											
6											
					5	SS	WH				
7											
		End of Borehole		84.06 7.62							
8											
9											
10											

DEPTH SCALE

1 : 50

Golder Associates

LOGGED: DG

CHECKED: SD

MIS-BHS 001 1771847.GPJ GAL-MIS.GDT 09/12/17 JEM

PROJECT: 1771847

RECORD OF BOREHOLE: 17-14

SHEET 1 OF 1

LOCATION: N 5013544.1 ;E 363225.4

BORING DATE: February 14, 2017

DATUM: CGVD28

SAMPLER HAMMER, 64kg; DROP, 760mm

PENETRATION TEST HAMMER, 64kg; DROP, 760mm

DEPTH SCALE METRES	BORING METHOD	SOIL PROFILE: DESCRIPTION	STRATA PLOT	ELEV. / DEPTH (m)	SAMPLES: NUMBER	TYPE	BLOWS/0.30m	DYNAMIC PENETRATION RESISTANCE, BLOWS/0.3m (20 40 60 80) / SHEAR STRENGTH Cu, kPa (nat V. + Q - ●; rem V. ⊕ U - ○) (20 40 60 80)	HYDRAULIC CONDUCTIVITY, k, cm/s (10^{-6} 10^{-5} 10^{-4} 10^{-3}) / WATER CONTENT PERCENT (Wp ⊖W WI) (20 40 60 80)	ADDITIONAL LAB. TESTING	PIEZOMETER OR STANDPIPE INSTALLATION
		GROUND SURFACE		91.27							
0	Power Auger, 200 mm Diam. (Hollow Stem)	TOPSOIL - (SM) SILTY SAND; dark brown; moist		0.00							
		(CL/CI/CH) SILTY CLAY to CLAY; grey brown (WEATHERED CRUST); cohesive, w>PL, very stiff to stiff		0.16							
1					1	SS	4				
2					2	SS	2				
					3	SS	1				
		(CI/CH) SILTY CLAY to CLAY; grey with black organic mottling; cohesive, w>PL, firm		88.37 / 2.90							
3					4	SS	WH				
4								⊕ +			
								⊕ +			
5					5	SS	WH				
								⊕ +			
6								⊕ +			
					6	SS	WH				
7								⊕ +			
								⊕ +			
		End of Borehole		83.65 / 7.62				⊕ +			
8											
9											
10											

DEPTH SCALE

1 : 50

Golder Associates

LOGGED: DG

CHECKED: SD

MIS-BHS 001 1771847.GPJ GAL-MIS.GDT 09/12/17 JEM

PROJECT: 1771847

RECORD OF BOREHOLE: 17-31

SHEET 1 OF 1

LOCATION: N 5012999.3 ;E 362038.6

BORING DATE: March 27, 2017

DATUM: CGVD28

SAMPLER HAMMER, 64kg; DROP, 760mm

PENETRATION TEST HAMMER, 64kg; DROP, 760mm

DEPTH SCALE METRES	BORING METHOD	SOIL PROFILE: DESCRIPTION	STRATA PLOT	ELEV. / DEPTH (m)	SAMPLES: NUMBER	TYPE	BLOWS/0.30m	DYNAMIC PENETRATION RESISTANCE, BLOWS/0.3m (20 40 60 80)	SHEAR STRENGTH Cu, kPa (nat V. + Q - ●; rem V. ⊕ U - ○) (20 40 60 80)	HYDRAULIC CONDUCTIVITY, k, cm/s (10^{-6} 10^{-5} 10^{-4} 10^{-3}) / WATER CONTENT PERCENT (Wp ⊖W Wl; 20 40 60 80)	ADDITIONAL LAB. TESTING	PIEZOMETER OR STANDPIPE INSTALLATION
		GROUND SURFACE		91.20								
0	Power Auger, 200 mm Diam. (Hollow Stem)	TOPSOIL - (ML) sandy SILT; dark brown; moist		0.00								
		(CL/CI/CH) SILTY CLAY to CLAY; grey brown, contains silty sand layers (WEATHERED CRUST); cohesive, w>PL, very stiff to firm		0.09								
1					1	SS	7					
					2	SS	3					
2												
				88.46								
		(CI/CH) SILTY CLAY to CLAY; grey with black organic mottling, contains silt layers; cohesive, w>PL, soft to firm		2.74								
3					3	TP	PH					
4												
					4	SS	WH					
5												
6												
					5	SS	WH					
7												
				83.58								
		End of Borehole		7.62								
8												
9												
10												

DEPTH SCALE

1 : 50

Golder Associates

LOGGED: KM

CHECKED: SD

MIS-BHS 001 1771847.GPJ GAL-MIS.GDT 09/12/17 JEM

PROJECT: 1771847

RECORD OF BOREHOLE: 17-32

SHEET 1 OF 1

LOCATION: N 5012872.7 ;E 362097.3

BORING DATE: March 17, 2017

DATUM: CGVD28

SAMPLER HAMMER, 64kg; DROP, 760mm

PENETRATION TEST HAMMER, 64kg; DROP, 760mm

DEPTH SCALE METRES	BORING METHOD	SOIL PROFILE: DESCRIPTION	STRATA PLOT	ELEV. / DEPTH (m)	SAMPLES: NUMBER	TYPE	BLOWS/0.30m	DYNAMIC PENETRATION RESISTANCE, BLOWS/0.3m (20 40 60 80) / SHEAR STRENGTH Cu, kPa (nat V. + Q - ●; rem V. ⊕ U - ○) (20 40 60 80)	HYDRAULIC CONDUCTIVITY, k, cm/s (10^{-6} 10^{-5} 10^{-4} 10^{-3}) / WATER CONTENT PERCENT (Wp — W — Wl) (20 40 60 80)	ADDITIONAL LAB. TESTING	PIEZOMETER OR STANDPIPE INSTALLATION
		GROUND SURFACE		91.05							
0	Power Auger, 200 mm Diam. (Hollow Stem)	TOPSOIL - (ML) sandy SILT; brown; moist		0.00							
		(CL/CI/CH) SILTY CLAY to CLAY; grey brown, contains sandy silt layers (WEATHERED CRUST); cohesive, w>PL, very stiff to stiff		0.12							
1					1	SS	5				
2					2	SS	1				
		(CI/CH) SILTY CLAY to CLAY; grey with black organic mottling; cohesive, w>PL, firm to soft		88.31 / 2.74							
3					3	SS	WH				
4											
5					4	SS	WH				
6											
7					5	SS	WH				
		End of Borehole		83.43 / 7.62							
8											
9											
10											

DEPTH SCALE

1 : 50

Golder Associates

LOGGED: KM

CHECKED: SD

MIS-BHS 001 1771847.GPJ GAL-MIS.GDT 09/12/17 JEM

PROJECT: 1771847

RECORD OF BOREHOLE: 17-32A

SHEET 1 OF 1

LOCATION: Adjacent to BH 17-32

BORING DATE: March 17, 2017

DATUM: CGVD28

SAMPLER HAMMER, 64kg; DROP, 760mm

PENETRATION TEST HAMMER, 64kg; DROP, 760mm

DEPTH SCALE METRES	BORING METHOD	SOIL PROFILE: DESCRIPTION	STRATA PLOT	ELEV. / DEPTH (m)	SAMPLES: NUMBER	TYPE	BLOWS/0.30m	DYNAMIC PENETRATION RESISTANCE, BLOWS/0.3m (20 40 60 80) / SHEAR STRENGTH Cu, kPa (nat V. + Q - ●, rem V. ⊕ U - ○) (20 40 60 80)	HYDRAULIC CONDUCTIVITY, k, cm/s (10^{-6} 10^{-5} 10^{-4} 10^{-3}) / WATER CONTENT PERCENT (Wp ⊖W WI) (20 40 60 80)	ADDITIONAL LAB. TESTING	PIEZOMETER OR STANDPIPE INSTALLATION
		GROUND SURFACE		91.05							
0	Power Auger, 200 mm Diam. (Hollow Stem)	Refer to Borehole 17-32 for Stratigraphy		0.00							Bentonite Seal
1											Silica Sand
2											51 mm Diam. PVC #10 Slot Screen
3				88.00							Silica Sand
		End of Borehole		3.05							WL in Screen at Elev. 90.63 m on March 31, 2017
4											
5											
6											
7											
8											
9											
10											

DEPTH SCALE

1 : 50

Golder Associates

LOGGED: KM

CHECKED: SD

PROJECT: 1771847

RECORD OF BOREHOLE: 17-33

SHEET 1 OF 1

LOCATION: N 5013212.1 ;E 362096.4

BORING DATE: March 28, 2017

DATUM: CGVD28

SAMPLER HAMMER, 64kg; DROP, 760mm

PENETRATION TEST HAMMER, 64kg; DROP, 760mm

DEPTH SCALE METRES	BORING METHOD	SOIL PROFILE DESCRIPTION	STRATA PLOT	ELEV. / DEPTH (m)	SAMPLES NUMBER	TYPE	BLOWS/0.30m	DYNAMIC PENETRATION RESISTANCE, BLOWS/0.3m (20 40 60 80) / SHEAR STRENGTH Cu, kPa (nat V. + Q - ●; rem V. ⊕ U - ○) (20 40 60 80)	HYDRAULIC CONDUCTIVITY, k, cm/s (10^{-6} 10^{-5} 10^{-4} 10^{-3}) / WATER CONTENT PERCENT (Wp ⊖ W Wl; 20 40 60 80)	ADDITIONAL LAB. TESTING	PIEZOMETER OR STANDPIPE INSTALLATION
		GROUND SURFACE		91.53							
0	Power Auger, 200 mm Diam. (Hollow Stem)	TOPSOIL - (ML) sandy SILT; dark brown; moist		0.00							
		(CL/CI/CH) SILTY CLAY to CLAY; grey brown, contains sandy silt layers (WEATHERED CRUST); cohesive, w>PL, very stiff to stiff		0.12							
1					1	SS	3				
2					2	SS	WH				
3				88.48							Cuttings
		(CI/CH) SILTY CLAY to CLAY; grey with black organic mottling, contains silt seams; cohesive, w>PL, soft to firm		3.05	3	SS	WH				
4											
5					4	SS	WH				
6											Bentonite Seal
					5	SS	WH				
											Silica Sand
7											Standpipe
8					6	TP	PH			C	
											Cuttings
9				82.39							
		End of Borehole		9.14							W.L. in Standpipe at Elev. 91.08 m on April 13, 2017
10											

DEPTH SCALE

1 : 50

Golder Associates

LOGGED: KM

CHECKED: SD

MIS-BHS 001 1771847.GPJ GAL-MIS.GDT 09/12/17 JEM

PROJECT: 1771847

RECORD OF BOREHOLE: 17-34

SHEET 1 OF 1

LOCATION: N 5013095.4 ;E 362152.5

BORING DATE: March 27, 2017

DATUM: CGVD28

SAMPLER HAMMER, 64kg; DROP, 760mm

PENETRATION TEST HAMMER, 64kg; DROP, 760mm

DEPTH SCALE METRES	BORING METHOD	SOIL PROFILE: DESCRIPTION	STRATA PLOT	ELEV. / DEPTH (m)	SAMPLES: NUMBER	TYPE	BLOWS/0.30m	DYNAMIC PENETRATION RESISTANCE, BLOWS/0.3m (20 40 60 80) / SHEAR STRENGTH Cu, kPa (nat V. + Q - ●; rem V. ⊕ U - ○) (20 40 60 80)	HYDRAULIC CONDUCTIVITY, k, cm/s (10^{-6} 10^{-5} 10^{-4} 10^{-3}) / WATER CONTENT PERCENT (Wp — W — Wl) (20 40 60 80)	ADDITIONAL LAB. TESTING	PIEZOMETER OR STANDPIPE INSTALLATION
		GROUND SURFACE		91.25							
0	Power Auger, 200 mm Diam. (Hollow Stem)	TOPSOIL - (ML) sandy SILT; dark brown; moist		0.00							
		(CL/CI/CH) SILTY CLAY to CLAY; grey brown, contains sandy silt layers (WEATHERED CRUST); cohesive, w>PL, very stiff to stiff		0.11							
1					1	SS	5				
					2	SS	2				
2											
3				88.20							
		(CI/CH) SILTY CLAY to CLAY; grey with black organic mottling, contains silt seams; cohesive, w>PL, soft to firm		3.05	3	SS	WH				
4											
5					4	SS	WH				
6											
					5	SS	WH				
7											
				83.63							
		End of Borehole		7.62							
8											
9											
10											

DEPTH SCALE

1 : 50

Golder Associates

LOGGED: KM

CHECKED: SD

PROJECT: 1771847

RECORD OF BOREHOLE: 17-35

SHEET 1 OF 1

LOCATION: N 5012859.6 ;E 362245.8

BORING DATE: March 28, 2017

DATUM: CGVD28

SAMPLER HAMMER, 64kg; DROP, 760mm

PENETRATION TEST HAMMER, 64kg; DROP, 760mm

DEPTH SCALE METRES	BORING METHOD	SOIL PROFILE: DESCRIPTION	STRATA PLOT	ELEV. / DEPTH (m)	SAMPLES: NUMBER	TYPE	BLOWS/0.30m	ADDITIONAL LAB. TESTING	PIEZOMETER OR STANDPIPE INSTALLATION
		GROUND SURFACE		91.04					
0	Power Auger, 200 mm Diam. (Hollow Stem)	TOPSOIL - (ML) sandy SILT; dark brown; moist		0.00					
		(CL/CI/CH) SILTY CLAY to CLAY; grey brown, contains sandy silt layers (WEATHERED CRUST); cohesive, w>PL, stiff to firm		0.11					
1					1	SS	2		
					2	SS	WH		
2									
		(CI/CH) SILTY CLAY to CLAY; grey with black organic mottling, contains silt seams; cohesive, w>PL, soft to firm		88.45 / 2.59					Cuttings
3					3	SS	WH		
4					4	SS	WH		
5									
6					5	TP	PH	C	Bentonite Seal
									Silica Sand
7									Standpipe
					6	SS	WH		
8									Cuttings
9				81.90					
		End of Borehole		9.14					W.L. in Standpipe at Elev. 90.50 m on April 13, 2017
10									

DYNAMIC PENETRATION RESISTANCE, BLOWS/0.3m: 20, 40, 60, 80

SHEAR STRENGTH Cu, kPa: nat V. + Q - ●; rem V. ⊕ U - ○; 20, 40, 60, 80

HYDRAULIC CONDUCTIVITY, k, cm/s: 10^{-6}, 10^{-5}, 10^{-4}, 10^{-3}

WATER CONTENT PERCENT: Wp ⊢—○—⊣ Wl; W; 20, 40, 60, 80

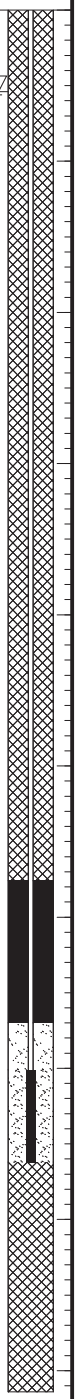

DEPTH SCALE

1 : 50

Golder Associates

LOGGED: KM

CHECKED: SD

MIS-BHS 001 1771847.GPJ GAL-MIS.GDT 09/12/17 JEM

PROJECT: 1771847

RECORD OF BOREHOLE: 17-36

SHEET 1 OF 1

LOCATION: N 5013155.1 ;E 362292.3

BORING DATE: March 17, 2017

DATUM: CGVD28

SAMPLER HAMMER, 64kg; DROP, 760mm

PENETRATION TEST HAMMER, 64kg; DROP, 760mm

DEPTH SCALE METRES	BORING METHOD	SOIL PROFILE: DESCRIPTION	STRATA PLOT	ELEV. / DEPTH (m)	SAMPLES: NUMBER	TYPE	BLOWS/0.30m	DYNAMIC PENETRATION RESISTANCE, BLOWS/0.3m (20 40 60 80) / SHEAR STRENGTH Cu, kPa (nat V. + Q - ●; rem V. ⊕ U - ○) (20 40 60 80)	HYDRAULIC CONDUCTIVITY, k, cm/s (10^{-6} 10^{-5} 10^{-4} 10^{-3}) / WATER CONTENT PERCENT (Wp ⊖ W Wl; 20 40 60 80)	ADDITIONAL LAB. TESTING	PIEZOMETER OR STANDPIPE INSTALLATION
		GROUND SURFACE		91.35							
0	Power Auger, 200 mm Diam. Hollow Stem	TOPSOIL - (ML) sandy SILT; dark brown; moist		0.00							
		(CL/CI/CH) SILTY CLAY to CLAY; grey brown, contains sandy silt layers (WEATHERED CRUST); cohesive, w>PL, very stiff to stiff		0.11							
1					1	SS	5				
					2	SS	WH				
2											
3				88.30							
		(CI/CH) SILTY CLAY to CLAY; grey with black organic mottling, contains silt seams; cohesive, w>PL, soft to firm		3.05							
					3	SS	WH				
4											
5					4	SS	WH				
6											
					5	SS	WH				
7											
				83.73							
		End of Borehole		7.62							
8											
9											
10											

DEPTH SCALE

1 : 50

Golder Associates

LOGGED: KM

CHECKED: SD

PROJECT: 1771847

RECORD OF BOREHOLE: 17-36A

SHEET 1 OF 1

LOCATION: Adjacent to BH 17-36

BORING DATE: March 17, 2017

DATUM: CGVD28

SAMPLER HAMMER, 64kg; DROP, 760mm

PENETRATION TEST HAMMER, 64kg; DROP, 760mm

DEPTH SCALE METRES	BORING METHOD	SOIL PROFILE: DESCRIPTION	STRATA PLOT	ELEV. / DEPTH (m)	SAMPLES: NUMBER	TYPE	BLOWS/0.30m	DYNAMIC PENETRATION RESISTANCE, BLOWS/0.3m (20 40 60 80) / SHEAR STRENGTH Cu, kPa (nat V. + Q - ●, rem V. ⊕ U - ○) (20 40 60 80)	HYDRAULIC CONDUCTIVITY, k, cm/s (10^{-6} 10^{-5} 10^{-4} 10^{-3}) / WATER CONTENT PERCENT (Wp ⊖W WI) (20 40 60 80)	ADDITIONAL LAB. TESTING	PIEZOMETER OR STANDPIPE INSTALLATION
		GROUND SURFACE		91.35							
0	Power Auger, 200 mm Diam. (Hollow Stem)	Refer to Borehole 17-36 for Stratigraphy		0.00							Bentonite Seal
1											Silica Sand
2											51 mm Diam. PVC #10 Slot Screen
3				88.30							Silica Sand
		End of Borehole		3.05							WL in Screen at Elev. 90.73 m on March 31, 2017
4											
5											
6											
7											
8											
9											
10											

DEPTH SCALE

1 : 50

Golder Associates

LOGGED: KM

CHECKED: SD

PROJECT: 1771847

RECORD OF BOREHOLE: 17-37

SHEET 1 OF 1

LOCATION: N 5013047.0 ;E 362327.9

BORING DATE: March 24, 2017

DATUM: CGVD28

SAMPLER HAMMER, 64kg; DROP, 760mm

PENETRATION TEST HAMMER, 64kg; DROP, 760mm

DEPTH SCALE METRES	BORING METHOD	SOIL PROFILE: DESCRIPTION	STRATA PLOT	ELEV. / DEPTH (m)	SAMPLES: NUMBER	TYPE	BLOWS/0.30m	DYNAMIC PENETRATION RESISTANCE, BLOWS/0.3m (20 40 60 80) / SHEAR STRENGTH Cu, kPa (nat V. + Q - ●; rem V. ⊕ U - ○) (20 40 60 80)	HYDRAULIC CONDUCTIVITY, k, cm/s (10^{-6} 10^{-5} 10^{-4} 10^{-3}) / WATER CONTENT PERCENT (Wp ⊢—○ W —⊣ Wl) (20 40 60 80)	ADDITIONAL LAB. TESTING	PIEZOMETER OR STANDPIPE INSTALLATION
		GROUND SURFACE		91.08							
0	Power Auger, 200 mm Diam. (Hollow Stem)	TOPSOIL - (ML) sandy SILT; dark brown; moist		0.00							
		(CL/CI/CH) SILTY CLAY to CLAY; grey brown, contains sandy silt layers (WEATHERED CRUST); cohesive, w>PL, very stiff to stiff		0.10							
1					1	SS	5				
					2	SS	3				
2											
		(CI/CH) SILTY CLAY to CLAY; grey with black organic mottling, contains silt seams; cohesive, w>PL, soft to firm		88.34 / 2.74							
3					3	SS	WH				
4											
5					4	SS	WH				
6											
					5	SS	WH				
7											
8					6	SS	WH				
9				81.94							
		End of Borehole		9.14							
10											

DEPTH SCALE

1 : 50

Golder Associates

LOGGED: KM

CHECKED: SD

MIS-BHS 001 1771847.GPJ GAL-MIS.GDT 09/12/17 JEM

PROJECT: 1771847

RECORD OF BOREHOLE: 17-38

SHEET 1 OF 1

LOCATION: N 5012944.6 ;E 362382.6

BORING DATE: March 20, 2017

DATUM: CGVD28

SAMPLER HAMMER, 64kg; DROP, 760mm

PENETRATION TEST HAMMER, 64kg; DROP, 760mm

DEPTH SCALE METRES	BORING METHOD	SOIL PROFILE: DESCRIPTION	STRATA PLOT	ELEV. / DEPTH (m)	SAMPLES: NUMBER	TYPE	BLOWS/0.30m	DYNAMIC PENETRATION RESISTANCE, BLOWS/0.3m (20 40 60 80) / SHEAR STRENGTH Cu, kPa (nat V. + Q - ●; rem V. ⊕ U - ○) (20 40 60 80)	HYDRAULIC CONDUCTIVITY, k, cm/s (10^{-6} 10^{-5} 10^{-4} 10^{-3}) / WATER CONTENT PERCENT (Wp — W — Wl; 20 40 60 80)	ADDITIONAL LAB. TESTING	PIEZOMETER OR STANDPIPE INSTALLATION
		GROUND SURFACE		91.24							
0	Power Auger, 200 mm Diam. (Hollow Stem)	TOPSOIL - (ML) sandy SILT; dark brown; moist		0.00							
		(CL/CI/CH) SILTY CLAY to CLAY; grey brown, contains sandy silt layers (WEATHERED CRUST); cohesive, w>PL, very stiff to stiff		0.13	1	SS	6				
1					2	SS	2				
2											
		(CI/CH) SILTY CLAY to CLAY; grey with black mottling, contains sandy silt seams; cohesive, w>PL, soft to stiff		88.50 / 2.74	3	SS	WH				
3											
4					4	SS	WH				
5											
6					5	SS	WH				
7											
		End of Borehole		83.62 / 7.62							
8											
9											
10											

DEPTH SCALE

1 : 50

Golder Associates

LOGGED: KM

CHECKED: SD

MIS-BHS 001 1771847.GPJ GAL-MIS.GDT 09/12/17 JEM

PROJECT: 1771847

RECORD OF BOREHOLE: 17-38A

SHEET 1 OF 1

LOCATION: Adjacent to BH 17-38

BORING DATE: March 20, 2017

DATUM: CGVD28

SAMPLER HAMMER, 64kg; DROP, 760mm

PENETRATION TEST HAMMER, 64kg; DROP, 760mm

DEPTH SCALE METRES	BORING METHOD	SOIL PROFILE: DESCRIPTION	STRATA PLOT	ELEV. / DEPTH (m)	SAMPLES: NUMBER	TYPE	BLOWS/0.30m	DYNAMIC PENETRATION RESISTANCE, BLOWS/0.3m (20 40 60 80) / SHEAR STRENGTH Cu, kPa (nat V. + Q - ●, rem V. ⊕ U - ○) (20 40 60 80)	HYDRAULIC CONDUCTIVITY, k, cm/s (10^{-6} 10^{-5} 10^{-4} 10^{-3}) / WATER CONTENT PERCENT (Wp ⊖W WI) (20 40 60 80)	ADDITIONAL LAB. TESTING	PIEZOMETER OR STANDPIPE INSTALLATION
		GROUND SURFACE		91.24							
0	Power Auger, 200 mm Diam. (Hollow Stem)	Refer to Borehole 17-38 for Stratigraphy		0.00							Bentonite Seal
1											Silica Sand
2											51 mm Diam. PVC #10 Slot Screen
3				88.19							Silica Sand
		End of Borehole		3.05							WL in Screen at Elev. 90.63 m on March 31, 2017
4											
5											
6											
7											
8											
9											
10											

DEPTH SCALE

1 : 50

Golder Associates

LOGGED: KM

CHECKED: SD

PROJECT: 1771847

RECORD OF BOREHOLE: 17-39

SHEET 1 OF 1

LOCATION: N 5013209.6 ;E 362401.9

BORING DATE: March 23, 2017

DATUM: CGVD28

SAMPLER HAMMER, 64kg; DROP, 760mm

PENETRATION TEST HAMMER, 64kg; DROP, 760mm

DEPTH SCALE METRES	BORING METHOD	SOIL PROFILE DESCRIPTION	STRATA PLOT	ELEV. DEPTH (m)	SAMPLES NUMBER	TYPE	BLOWS/0.30m	DYNAMIC PENETRATION RESISTANCE, BLOWS/0.3m (20 40 60 80) / SHEAR STRENGTH Cu, kPa (nat V. + Q - ●; rem V. ⊕ U - ○) (20 40 60 80)	HYDRAULIC CONDUCTIVITY, k, cm/s (10^{-6} 10^{-5} 10^{-4} 10^{-3}) / WATER CONTENT PERCENT (Wp ⊢—○ W —⊣ Wl) (20 40 60 80)	ADDITIONAL LAB. TESTING	PIEZOMETER OR STANDPIPE INSTALLATION
		GROUND SURFACE		91.23							
0	Power Auger 200 mm Diam. (Hollow Stem)	TOPSOIL - (SM) SILTY SAND, trace gravel; brown; moist		0.00							
		(CL/CI/CH) SILTY CLAY to CLAY; grey brown, contains silty sand layers (WEATHERED CRUST); cohesive, w>PL, stiff		0.15	1	GRAB	-				
1					2	SS	2				
					3	SS	2				
2								⊕			
								⊕			
3				88.18							
		(CI/CH) SILTY CLAY to CLAY; grey with black organic mottling; cohesive, w>PL, firm		3.05	4	SS	WH				
4								⊕ +			
								⊕ +			
5					5	SS	WH				
								⊕ +			
6								⊕ +			
					6	SS	WH				
7								⊕ +			
								⊕ +			
				83.61				⊕ +			
		End of Borehole		7.62							
8											
9											
10											

DEPTH SCALE

1 : 50

Golder Associates

LOGGED: SN

CHECKED: SD

MIS-BHS 001 1771847.GPJ GAL-MIS.GDT 09/12/17 JEM

PROJECT: 1771847

RECORD OF BOREHOLE: 17-40

SHEET 1 OF 1

LOCATION: N 5013015.1 ;E 362511.5

BORING DATE: March 24, 2017

DATUM: CGVD28

SAMPLER HAMMER, 64kg; DROP, 760mm

PENETRATION TEST HAMMER, 64kg; DROP, 760mm

DEPTH SCALE METRES	BORING METHOD	SOIL PROFILE: DESCRIPTION	STRATA PLOT	ELEV. / DEPTH (m)	SAMPLES: NUMBER	TYPE	BLOWS/0.30m	DYNAMIC PENETRATION RESISTANCE, BLOWS/0.3m (20 40 60 80) / SHEAR STRENGTH Cu, kPa (nat V. + Q - ●; rem V. ⊕ U - ○) (20 40 60 80)	HYDRAULIC CONDUCTIVITY, k, cm/s (10^{-6} 10^{-5} 10^{-4} 10^{-3}) / WATER CONTENT PERCENT (Wp — W — Wl; 20 40 60 80)	ADDITIONAL LAB. TESTING	PIEZOMETER OR STANDPIPE INSTALLATION
		GROUND SURFACE		91.27							
0	Power Auger, 200 mm Diam. (Hollow Stem)	TOPSOIL - (SM) SILTY SAND; brown; moist		0.00							
		(CL/CI/CH) SILTY CLAY to CLAY; grey brown, contains sand layers and possible cobbles or boulders (WEATHERED CRUST); cohesive, w>PL, stiff		0.15	1	GRAB	-				
1					2	SS	2				
		- augers grinding from 1.5 to 2.1 m depth			3A	SS	>50				
2					3B	SS	2				
		(CI/CH) SILTY CLAY to CLAY; grey with black organic mottling; cohesive, w>PL, soft to firm		88.37 / 2.90							
3					4	SS	WH				
4											
5					5	SS	WH				
6					6	SS	WH				
7											
		End of Borehole		83.65 / 7.62							
8											
9											
10											

DEPTH SCALE

1 : 50

Golder Associates

LOGGED: SN

CHECKED: SD

MIS-BHS 001 1771847.GPJ GAL-MIS.GDT 09/12/17 JEM

PROJECT: 1771847

RECORD OF BOREHOLE: 17-41

SHEET 1 OF 1

LOCATION: N 5013282.6 ;E 362535.2

BORING DATE: March 23, 2017

DATUM: CGVD28

SAMPLER HAMMER, 64kg; DROP, 760mm

PENETRATION TEST HAMMER, 64kg; DROP, 760mm

DEPTH SCALE METRES	BORING METHOD	SOIL PROFILE: DESCRIPTION	STRATA PLOT	ELEV. / DEPTH (m)	SAMPLES: NUMBER	TYPE	BLOWS/0.30m	DYNAMIC PENETRATION RESISTANCE, BLOWS/0.3m (20 40 60 80) / SHEAR STRENGTH Cu, kPa (nat V. + Q - ●; rem V. ⊕ U - ○) (20 40 60 80)	HYDRAULIC CONDUCTIVITY, k, cm/s (10^{-6} 10^{-5} 10^{-4} 10^{-3}) / WATER CONTENT PERCENT (Wp — W — Wl; 20 40 60 80)	ADDITIONAL LAB. TESTING	PIEZOMETER OR STANDPIPE INSTALLATION
		GROUND SURFACE		91.51							
0	Power Auger, 200 mm Diam. (Hollow Stem)	TOPSOIL - (SM) SILTY SAND; brown; moist		0.00							
		(CL/CI/CH) SILTY CLAY to CLAY; grey brown, contains sandy silt layers (WEATHERED CRUST); cohesive, w>PL, very stiff to stiff		0.13	1	GRAB	-				
1					2	SS	2				
					3	SS	2				
2											
3				88.46							
		(CI/CH) SILTY CLAY to CLAY; grey with black organic mottling, contains sand seams; cohesive, w>PL, firm		3.05	4	SS	WH				
4											
5					5	SS	WH				
6											
					6	SS	WH				
7											
				83.89							
		End of Borehole		7.62							
8											
9											
10											

DEPTH SCALE

1 : 50

Golder Associates

LOGGED: SN

CHECKED: SD

PROJECT: 1771847

RECORD OF BOREHOLE: 17-42

SHEET 1 OF 1

LOCATION: N 5013169.5 ;E 362589.9

BORING DATE: March 30, 2017

DATUM: CGVD28

SAMPLER HAMMER, 64kg; DROP, 760mm

PENETRATION TEST HAMMER, 64kg; DROP, 760mm

DEPTH SCALE METRES	BORING METHOD	SOIL PROFILE: DESCRIPTION	STRATA PLOT	ELEV. / DEPTH (m)	SAMPLES: NUMBER	TYPE	BLOWS/0.30m	DYNAMIC PENETRATION RESISTANCE, BLOWS/0.3m (20 40 60 80) / SHEAR STRENGTH Cu, kPa (nat V. + Q - ●; rem V. ⊕ U - ○) (20 40 60 80)	HYDRAULIC CONDUCTIVITY, k, cm/s (10^{-6} 10^{-5} 10^{-4} 10^{-3}) / WATER CONTENT PERCENT (Wp ⊖W WI) (20 40 60 80)	ADDITIONAL LAB. TESTING	PIEZOMETER OR STANDPIPE INSTALLATION
		GROUND SURFACE		91.16							
0	Power Auger, 200 mm Diam. (Hollow Stem)	TOPSOIL - (SM) SILTY SAND; brown; moist		0.00							
		(CL/CI/CH) SILTY CLAY to CLAY; grey brown, contains silty sand layers (WEATHERED CRUST); cohesive, w>PL, stiff to firm		0.15	1	GRAB	-				Bentonite Seal
1					2	SS	1				
					3	SS	1				
2											
		(CI/CH) SILTY CLAY to CLAY; grey with black organic mottling, contains sand seams; cohesive, w>PL, soft to firm		88.42 / 2.74							
3					4	SS	WH				Cuttings
4											
5					5	SS	WH				
6					6	SS	WH				Bentonite Seal
7											Standpipe
8					7	TP	PH				Cuttings
9				82.02							
		End of Borehole		9.14							W.L. in Standpipe at Elev. 90.94 m on April 13, 2017
10											

DEPTH SCALE

1 : 50

Golder Associates

LOGGED: SN

CHECKED: SD

MIS-BHS 001 1771847.GPJ GAL-MIS.GDT 09/12/17 JEM

PROJECT: 1771847

RECORD OF BOREHOLE: 17-43

SHEET 1 OF 1

LOCATION: N 5013089.3 ;E 362640.6

BORING DATE: March 20, 2017

DATUM: CGVD28

SAMPLER HAMMER, 64kg; DROP, 760mm

PENETRATION TEST HAMMER, 64kg; DROP, 760mm

DEPTH SCALE METRES	BORING METHOD	SOIL PROFILE: DESCRIPTION	STRATA PLOT	ELEV. / DEPTH (m)	SAMPLES: NUMBER	TYPE	BLOWS/0.30m	DYNAMIC PENETRATION RESISTANCE, BLOWS/0.3m (20 40 60 80) / SHEAR STRENGTH Cu, kPa (nat V. + Q - ●; rem V. ⊕ U - ○) (20 40 60 80)	HYDRAULIC CONDUCTIVITY, k, cm/s (10^{-6} 10^{-5} 10^{-4} 10^{-3}) / WATER CONTENT PERCENT (Wp ⊖W WI) (20 40 60 80)	ADDITIONAL LAB. TESTING	PIEZOMETER OR STANDPIPE INSTALLATION
		GROUND SURFACE		91.52							
0	Power Auger, 200 mm Diam. (Hollow Stem)	TOPSOIL - (SM) SILTY SAND; dark brown; moist		0.00							
		(CL/CI/CH) SILTY CLAY to CLAY; grey brown, contains silty sand layers (WEATHERED CRUST); cohesive, w>PL, very stiff to stiff		0.15							
1					1	SS	2				
					2	SS	2				
2											
								⊕ +			
								⊕ +			
3				88.47							
		(CI/CH) SILTY CLAY to CLAY; grey with black organic mottling, contains sand seams; cohesive, w>PL, soft to firm		3.05	3	SS	WH				
4								⊕ +			
								⊕ +			
					4	SS	WH				
5											
								⊕ +			
								⊕ +			
6											
					5	SS	WH				
7								⊕ +			
								⊕ +			
				83.90							
		End of Borehole		7.62				⊕ +			
8											
9											
10											

DEPTH SCALE

1 : 50

Golder Associates

LOGGED: SN

CHECKED: SD

MIS-BHS 001 1771847.GPJ GAL-MIS.GDT 09/12/17 JEM

PROJECT: 1771847

RECORD OF BOREHOLE: 17-43A

SHEET 1 OF 1

LOCATION: Adjacent to BH 17-43

BORING DATE: March 20, 2017

DATUM: CGVD28

SAMPLER HAMMER, 64kg; DROP, 760mm

PENETRATION TEST HAMMER, 64kg; DROP, 760mm

DEPTH SCALE METRES	BORING METHOD	SOIL PROFILE: DESCRIPTION	STRATA PLOT	ELEV. / DEPTH (m)	SAMPLES: NUMBER	TYPE	BLOWS/0.30m	DYNAMIC PENETRATION RESISTANCE, BLOWS/0.3m (20 40 60 80) / SHEAR STRENGTH Cu, kPa (nat V. + Q - ●, rem V. ⊕ U - ○) (20 40 60 80)	HYDRAULIC CONDUCTIVITY, k, cm/s (10^{-6} 10^{-5} 10^{-4} 10^{-3}) / WATER CONTENT PERCENT (Wp ⊖W WI) (20 40 60 80)	ADDITIONAL LAB. TESTING	PIEZOMETER OR STANDPIPE INSTALLATION
		GROUND SURFACE		91.52							
0	Power Auger, 200 mm Diam. (Hollow Stem)	Refer to Borehole 17-43 for Stratigraphy		0.00							Bentonite Seal
1											Silica Sand
2											51 mm Diam. PVC #10 Slot Screen
3				88.47							Silica Sand
		End of Borehole		3.05							WL in Screen at Elev. 91.60 m on March 31, 2017
4											
5											
6											
7											
8											
9											
10											

DEPTH SCALE

1 : 50

Golder Associates

LOGGED: SN

CHECKED: SD

PROJECT: 1771847

RECORD OF BOREHOLE: 17-44

SHEET 1 OF 1

LOCATION: N 5013362.7 ;E 362667.1

BORING DATE: March 30, 2017

DATUM: CGVD28

SAMPLER HAMMER, 64kg; DROP, 760mm

PENETRATION TEST HAMMER, 64kg; DROP, 760mm

DEPTH SCALE METRES	BORING METHOD	SOIL PROFILE: DESCRIPTION	STRATA PLOT	ELEV. / DEPTH (m)	SAMPLES: NUMBER	TYPE	BLOWS/0.30m	DYNAMIC PENETRATION RESISTANCE, BLOWS/0.3m (20 40 60 80) / SHEAR STRENGTH Cu, kPa (nat V. + Q - ●; rem V. ⊕ U - ○) (20 40 60 80)	HYDRAULIC CONDUCTIVITY, k, cm/s (10^{-6} 10^{-5} 10^{-4} 10^{-3}) / WATER CONTENT PERCENT (Wp ⊢—○ W —⊣ Wl) (20 40 60 80)	ADDITIONAL LAB. TESTING	PIEZOMETER OR STANDPIPE INSTALLATION
		GROUND SURFACE		91.54							
0	Power Auger, 200 mm Diam. (Hollow Stem)	TOPSOIL - (SM) SILTY SAND; brown; moist		0.00							
		(CL/CI/CH) SILTY CLAY to CLAY; grey brown, contains silty sand layers (WEATHERED CRUST); cohesive, w>PL, very stiff to stiff		0.15	1	GRAB	-				
1					2	SS	2				
					3	SS	2				
2								⊕ +			
								⊕ +			
3		(CI/CH) SILTY CLAY to CLAY; grey with black organic mottling, contains sand seams; cohesive, w>PL, firm		88.49 / 3.05	4	SS	WH				
4								⊕ +			
								⊕ +			
5					5	SS	WH				
								⊕ +			
6								⊕ +			
					6	SS	WH				
7								⊕ +			
								⊕ +			
		End of Borehole		83.92 / 7.62				⊕ +			
8											
9											
10											

DEPTH SCALE

1 : 50

Golder Associates

LOGGED: SN

CHECKED: SD

PROJECT: 1771847

RECORD OF BOREHOLE: 17-45

SHEET 1 OF 1

LOCATION: N 5013163.8 ;E 362766.6

BORING DATE: March 24, 2017

DATUM: CGVD28

SAMPLER HAMMER, 64kg; DROP, 760mm

PENETRATION TEST HAMMER, 64kg; DROP, 760mm

DEPTH SCALE METRES	BORING METHOD	SOIL PROFILE: DESCRIPTION	STRATA PLOT	ELEV. / DEPTH (m)	SAMPLES: NUMBER	TYPE	BLOWS/0.30m	DYNAMIC PENETRATION RESISTANCE, BLOWS/0.3m (20 40 60 80) / SHEAR STRENGTH Cu, kPa (nat V. + Q - ●; rem V. ⊕ U - ○) (20 40 60 80)	HYDRAULIC CONDUCTIVITY, k, cm/s (10^{-6} 10^{-5} 10^{-4} 10^{-3}) / WATER CONTENT PERCENT (Wp ⊢—○ W —⊣ Wl) (20 40 60 80)	ADDITIONAL LAB. TESTING	PIEZOMETER OR STANDPIPE INSTALLATION
		GROUND SURFACE		91.60							
0	Power Auger, 200 mm Diam. (Hollow Stem)	TOPSOIL - (SM) SILTY SAND, trace gravel; dark brown; moist		0.00							
		(CL/CI/CH) SILTY CLAY to CLAY; grey brown, contains sand layers (WEATHERED CRUST); cohesive, w>PL, very stiff to stiff		91.38 / 0.22	1	GRAB	-				
1					2	SS	3				
					3	SS	2				
2								⊕ +			
								⊕ +			
3		(CI/CH) SILTY CLAY to CLAY; grey with black organic mottling; cohesive, w>PL, soft to firm		88.55 / 3.05	4	SS	WH				
4								⊕ +			
								⊕ +			
5					5	SS	WH				
								⊕ +			
								⊕ +			
6					6	SS	WH				
7								⊕ +			
								⊕ +			
		End of Borehole		83.98 / 7.62				⊕ +			
8											
9											
10											

DEPTH SCALE
1 : 50

Golder Associates

LOGGED: SN
CHECKED: SD

PROJECT: 1771847

RECORD OF BOREHOLE: 17-46

SHEET 1 OF 1

LOCATION: N 5013430.6 ;E 362784.4

BORING DATE: March 20, 2017

DATUM: CGVD28

SAMPLER HAMMER, 64kg; DROP, 760mm

PENETRATION TEST HAMMER, 64kg; DROP, 760mm

DEPTH SCALE METRES	BORING METHOD	SOIL PROFILE: DESCRIPTION	STRATA PLOT	ELEV. / DEPTH (m)	SAMPLES: NUMBER	TYPE	BLOWS/0.30m	DYNAMIC PENETRATION RESISTANCE, BLOWS/0.3m (20 40 60 80) / SHEAR STRENGTH Cu, kPa (nat V. + Q - ●; rem V. ⊕ U - ○) (20 40 60 80)	HYDRAULIC CONDUCTIVITY, k, cm/s (10^{-6} 10^{-5} 10^{-4} 10^{-3}) / WATER CONTENT PERCENT (Wp ⊢—○ W —⊣ Wl) (20 40 60 80)	ADDITIONAL LAB. TESTING	PIEZOMETER OR STANDPIPE INSTALLATION
		GROUND SURFACE		91.63							
0	Power Auger, 200 mm Diam. (Hollow Stem)	TOPSOIL - (SM) SILTY SAND; brown; moist		0.00							
		(CL/CI/CH) SILTY CLAY to CLAY; grey brown, contains sand layers (WEATHERED CRUST); cohesive, w>PL, very stiff to stiff		0.15	1	GRAB	-				
1					2	SS	4				
					3	SS	2				
2											
3				88.58							
		(CI/CH) SILTY CLAY to CLAY; grey with black organic mottling, contains sand seams; cohesive, w>PL, firm		3.05	4	SS	WH				
4											
5					5	SS	WH				
6											
					6	SS	WH				
7											
				84.01							
		End of Borehole		7.62							
8											
9											
10											

DEPTH SCALE

1 : 50

Golder Associates

LOGGED: SN

CHECKED: SD

PROJECT: 1771847

RECORD OF BOREHOLE: 17-46A

SHEET 1 OF 1

LOCATION: Adjacent to BH 17-46

BORING DATE: March 20, 2017

DATUM: CGVD28

SAMPLER HAMMER, 64kg; DROP, 760mm

PENETRATION TEST HAMMER, 64kg; DROP, 760mm

DEPTH SCALE METRES	BORING METHOD	SOIL PROFILE: DESCRIPTION	STRATA PLOT	ELEV. / DEPTH (m)	SAMPLES: NUMBER	TYPE	BLOWS/0.30m	DYNAMIC PENETRATION RESISTANCE, BLOWS/0.3m (20 40 60 80) / SHEAR STRENGTH Cu, kPa (nat V. + Q - ●, rem V. ⊕ U - ○) (20 40 60 80)	HYDRAULIC CONDUCTIVITY, k, cm/s (10^{-6} 10^{-5} 10^{-4} 10^{-3}) / WATER CONTENT PERCENT (Wp ⊖W WI) (20 40 60 80)	ADDITIONAL LAB. TESTING	PIEZOMETER OR STANDPIPE INSTALLATION
		GROUND SURFACE		91.63							
0	Power Auger, 200 mm Diam. (Hollow Stem)	Refer to Borehole 17-46 for Stratigraphy		0.00							Bentonite Seal
1											Silica Sand
2											51 mm Diam. PVC #10 Slot Screen
3				88.58							Silica Sand
		End of Borehole		3.05							WL in Screen at Elev. 91.36 m on March 31, 2017
4											
5											
6											
7											
8											
9											
10											

DEPTH SCALE

1 : 50

Golder Associates

LOGGED: SN

CHECKED: SD

PROJECT: 1771847

RECORD OF BOREHOLE: 17-47

SHEET 1 OF 1

LOCATION: N 5013313.3 ;E 362843.7

BORING DATE: March 30, 2017

DATUM: CGVD28

SAMPLER HAMMER, 64kg; DROP, 760mm

PENETRATION TEST HAMMER, 64kg; DROP, 760mm

DEPTH SCALE METRES	BORING METHOD	SOIL PROFILE: DESCRIPTION	STRATA PLOT	ELEV. / DEPTH (m)	SAMPLES: NUMBER	TYPE	BLOWS/0.30m	DYNAMIC PENETRATION RESISTANCE, BLOWS/0.3m (20 40 60 80) / SHEAR STRENGTH Cu, kPa (nat V. + Q - ●; rem V. ⊕ U - ○) (20 40 60 80)	HYDRAULIC CONDUCTIVITY, k, cm/s (10^{-6} 10^{-5} 10^{-4} 10^{-3}) / WATER CONTENT PERCENT (Wp ⊢—○W—⊣ Wl) (20 40 60 80)	ADDITIONAL LAB. TESTING	PIEZOMETER OR STANDPIPE INSTALLATION
		GROUND SURFACE		91.53							
0	Power Auger, 200 mm Diam. (Hollow Stem)	TOPSOIL - (SM) SILTY SAND; brown; moist		0.00							
		(CL/CI/CH) SILTY CLAY to CLAY; grey brown, contains silty sand layers (WEATHERED CRUST); cohesive, w>PL, stiff		0.15	1	GRAB	-				
1					2	SS	2				
					3	SS	WH				
2				89.09							
		(CI/CH) SILTY CLAY to CLAY; grey with black organic mottling, contains silty sand seams; cohesive, w>PL, soft to firm		2.44							
3					4	SS	WH				
4											
5					5	SS	WH				
6					6	SS	WH				
7				83.91							
		End of Borehole		7.62							
8											
9											
10											

DEPTH SCALE

1 : 50

Golder Associates

LOGGED: SN

CHECKED: SD

MIS-BHS 001 1771847.GPJ GAL-MIS.GDT 09/12/17 JEM

PROJECT: 1771847

RECORD OF BOREHOLE: 17-48

SHEET 1 OF 1

LOCATION: N 5013231.8 ;E 362893.8

BORING DATE: March 24, 2017

DATUM: CGVD28

SAMPLER HAMMER, 64kg; DROP, 760mm

PENETRATION TEST HAMMER, 64kg; DROP, 760mm

DEPTH SCALE METRES	BORING METHOD	SOIL PROFILE DESCRIPTION	STRATA PLOT	ELEV. DEPTH (m)	SAMPLES NUMBER	TYPE	BLOWS/0.30m	ADDITIONAL LAB. TESTING	PIEZOMETER OR STANDPIPE INSTALLATION
		GROUND SURFACE		91.54					
0	Power Auger 200 mm Diam. (Hollow Stem)	TOPSOIL - (SM) SILTY SAND, trace gravel; brown; moist		0.00					
		(CL/CI/CH) SILTY CLAY to CLAY; grey brown, contains silty sand layers (WEATHERED CRUST); cohesive, w>PL, very stiff to stiff		91.32 / 0.22	1	GRAB	-		
1					2	SS	5		
					3	SS	2		
2									
3		(CI/CH) SILTY CLAY to CLAY; grey with black organic mottling; cohesive, w>PL, soft to firm		88.49 / 3.05	4	SS	WH		
4									
5					5	TP	PH	C	
6					6	SS	WH		
7				83.92					
		End of Borehole		7.62					
8									
9									
10									

DYNAMIC PENETRATION RESISTANCE, BLOWS/0.3m: 20, 40, 60, 80

SHEAR STRENGTH Cu, kPa: nat V. + Q - ●; rem V. ⊕ U - ○; 20, 40, 60, 80

HYDRAULIC CONDUCTIVITY, k, cm/s: 10^{-6}, 10^{-5}, 10^{-4}, 10^{-3}

WATER CONTENT PERCENT: Wp ⊢—○—⊣ WI; W; 20, 40, 60, 80

DEPTH SCALE

1 : 50

Golder Associates

LOGGED: SN

CHECKED: SD

MIS-BHS 001 1771847.GPJ GAL-MIS.GDT 09/12/17 JEM

PROJECT: 1771847

RECORD OF BOREHOLE: 17-49

SHEET 1 OF 1

LOCATION: N 5013509.6 ;E 362910.4

BORING DATE: March 29, 2017

DATUM: CGVD28

SAMPLER HAMMER, 64kg; DROP, 760mm

PENETRATION TEST HAMMER, 64kg; DROP, 760mm

DEPTH SCALE METRES	BORING METHOD	SOIL PROFILE: DESCRIPTION	STRATA PLOT	ELEV. / DEPTH (m)	SAMPLES: NUMBER	TYPE	BLOWS/0.30m	DYNAMIC PENETRATION RESISTANCE, BLOWS/0.3m (20 40 60 80) / SHEAR STRENGTH Cu, kPa (nat V. + Q - ●; rem V. ⊕ U - ○) (20 40 60 80)	HYDRAULIC CONDUCTIVITY, k, cm/s (10^{-6} 10^{-5} 10^{-4} 10^{-3}) / WATER CONTENT PERCENT (Wp ⊢—○W—⊣ Wl) (20 40 60 80)	ADDITIONAL LAB. TESTING	PIEZOMETER OR STANDPIPE INSTALLATION
		GROUND SURFACE		91.64							
0	Power Auger, 200 mm Diam. (Hollow Stem)	TOPSOIL - (SM) SILTY SAND; brown; moist		0.00							
		(CL/CI/CH) SILTY CLAY to CLAY; grey brown, contains silty sand layers (WEATHERED CRUST); cohesive, w>PL, very stiff to stiff		0.15	1	GRAB	-				
1					2	SS	5				
					3	SS	3				
2											
3		(CI/CH) SILTY CLAY to CLAY; grey with black orgnanic mottling, contains silty sand seams; cohesive, w>PL, soft to firm		88.59 / 3.05	4	SS	WH				
4											
					5	SS	WH				
5											
6					6	TP	PH				
7											
		End of Borehole		84.02 / 7.62							
8											
9											
10											

DEPTH SCALE

1 : 50

Golder Associates

LOGGED: SN

CHECKED: SD

MIS-BHS 001 1771847.GPJ GAL-MIS.GDT 09/12/17 JEM

PROJECT: 1771847

RECORD OF BOREHOLE: 17-50

SHEET 1 OF 1

LOCATION: N 5013302.0 ;E 363015.6

BORING DATE: March 27, 2017

DATUM: CGVD28

SAMPLER HAMMER, 64kg; DROP, 760mm

PENETRATION TEST HAMMER, 64kg; DROP, 760mm

DEPTH SCALE METRES	BORING METHOD	SOIL PROFILE: DESCRIPTION	STRATA PLOT	ELEV. / DEPTH (m)	SAMPLES: NUMBER	TYPE	BLOWS/0.30m	DYNAMIC PENETRATION RESISTANCE, BLOWS/0.3m (20 40 60 80)	SHEAR STRENGTH Cu, kPa (nat V. + Q - ●; rem V. ⊕ U - ○) (20 40 60 80)	HYDRAULIC CONDUCTIVITY, k, cm/s (10^{-6} 10^{-5} 10^{-4} 10^{-3})	WATER CONTENT PERCENT (Wp — W — Wl; 20 40 60 80)	ADDITIONAL LAB. TESTING	PIEZOMETER OR STANDPIPE INSTALLATION
		GROUND SURFACE		91.44									
0	Power Auger, 200 mm Diam. (Hollow Stem)	TOPSOIL - (SM) SILTY SAND, trace gravel; brown; moist		0.00									
		(CL/CI/CH) SILTY CLAY to CLAY; grey brown, contains silty sand layers (WEATHERED CRUST); cohesive, w>PL, very stiff to stiff		0.15	1	GRAB	-						
1					2	SS	5						
					3	SS	1						
2													
3				88.39									
		(CI/CH) SILTY CLAY to CLAY; grey with black organic mottling; cohesive, w>PL, soft to firm		3.05	4	SS	WH						
4													
5					5	SS	WH						
6					6	SS	WH						
7				83.82									
		End of Borehole		7.62									
8													
9													
10													

DEPTH SCALE

1 : 50

Golder Associates

LOGGED: SN

CHECKED: SD

PROJECT: 1771847

RECORD OF BOREHOLE: 17-51

SHEET 1 OF 1

LOCATION: N 5013578.8 ;E 363036.0

BORING DATE: March 28, 2017

DATUM: CGVD28

SAMPLER HAMMER, 64kg; DROP, 760mm

PENETRATION TEST HAMMER, 64kg; DROP, 760mm

DEPTH SCALE METRES	BORING METHOD	SOIL PROFILE: DESCRIPTION	STRATA PLOT	ELEV. / DEPTH (m)	SAMPLES: NUMBER	TYPE	BLOWS/0.30m	DYNAMIC PENETRATION RESISTANCE, BLOWS/0.3m (20 40 60 80) / SHEAR STRENGTH Cu, kPa (nat V. + Q - ●; rem V. ⊕ U - ○) (20 40 60 80)	HYDRAULIC CONDUCTIVITY, k, cm/s (10^{-6} 10^{-5} 10^{-4} 10^{-3}) / WATER CONTENT PERCENT (Wp ⊢—○W—⊣ Wl) (20 40 60 80)	ADDITIONAL LAB. TESTING	PIEZOMETER OR STANDPIPE INSTALLATION
		GROUND SURFACE		91.43							
0	Power Auger, 200 mm Diam. (Hollow Stem)	TOPSOIL - (SM) SILTY SAND; brown; moist		0.00							
		(CL/CI/CH) SILTY CLAY to CLAY; grey brown, contains silty sand layers (WEATHERED CRUST); cohesive, w>PL, very stiff to stiff		0.15	1	GRAB	-				
1					2	SS	5				
					3	SS	3				
2											
3				88.38							
		(CI/CH) SILTY CLAY to CLAY; grey with black organic mottling; cohesive, w>PL, firm		3.05	4	SS	WH				
4											
					5	SS	WH				
5											
6					6	SS	WH				
7				83.81							
		End of Borehole		7.62							
8											
9											
10											

DEPTH SCALE

1 : 50

Golder Associates

LOGGED: SN

CHECKED: SD

MIS-BHS 001 1771847.GPJ GAL-MIS.GDT 09/12/17 JEM

PROJECT: 1771847

RECORD OF BOREHOLE: 17-52

SHEET 1 OF 1

LOCATION: N 5013458.3 ;E 363093.2

BORING DATE: March 20, 2017

DATUM: CGVD28

SAMPLER HAMMER, 64kg; DROP, 760mm

PENETRATION TEST HAMMER, 64kg; DROP, 760mm

DEPTH SCALE METRES	BORING METHOD	SOIL PROFILE: DESCRIPTION	STRATA PLOT	ELEV. / DEPTH (m)	SAMPLES: NUMBER	TYPE	BLOWS/0.30m	DYNAMIC PENETRATION RESISTANCE, BLOWS/0.3m (20 40 60 80) / SHEAR STRENGTH Cu, kPa (nat V. + Q - ●; rem V. ⊕ U - ○) (20 40 60 80)	HYDRAULIC CONDUCTIVITY, k, cm/s (10^{-6} 10^{-5} 10^{-4} 10^{-3}) / WATER CONTENT PERCENT (Wp — W — Wl; 20 40 60 80)	ADDITIONAL LAB. TESTING	PIEZOMETER OR STANDPIPE INSTALLATION
		GROUND SURFACE		91.43							
0	Power Auger, 200 mm Diam. (Hollow Stem)	TOPSOIL - (SM/ML) SILTY SAND to sandy SILT, trace gravel; brown; moist		0.00							
		(CL/CI/CH) SILTY CLAY to CLAY; grey brown, contains silty sand layers (WEATHERED CRUST); cohesive, w>PL, very stiff to firm		91.13 / 0.30	1	GRAB	-				
1					2	SS	5				
					3	SS	2				
2								⊕ +			
								⊕ +			
3		(CI/CH) SILTY CLAY to CLAY; grey with black organic mottling, contains silty sand seams; cohesive, w>PL, soft to firm		88.38 / 3.05	4	SS	WH				
4								⊕ +			
								⊕ +			
5					5	SS	WH				
								⊕ +			
								⊕ +			
6					6	SS	WH				
7								⊕ +			
								⊕ +			
		End of Borehole		83.81 / 7.62				⊕ +			
8											
9											
10											

DEPTH SCALE
1 : 50

Golder Associates

LOGGED: SN
CHECKED: SD

MIS-BHS 001 1771847.GPJ GAL-MIS.GDT 09/12/17 JEM

PROJECT: 1771847

RECORD OF BOREHOLE: 17-52A

SHEET 1 OF 1

LOCATION: Adjacent to BH 17-52

BORING DATE: March 20, 2017

DATUM: CGVD28

SAMPLER HAMMER, 64kg; DROP, 760mm

PENETRATION TEST HAMMER, 64kg; DROP, 760mm

DEPTH SCALE METRES	BORING METHOD	SOIL PROFILE: DESCRIPTION	STRATA PLOT	ELEV. / DEPTH (m)	SAMPLES: NUMBER	TYPE	BLOWS/0.30m	DYNAMIC PENETRATION RESISTANCE, BLOWS/0.3m (20 40 60 80) / SHEAR STRENGTH Cu, kPa (nat V. + Q - ●, rem V. ⊕ U - ○) (20 40 60 80)	HYDRAULIC CONDUCTIVITY, k, cm/s (10^{-6} 10^{-5} 10^{-4} 10^{-3}) / WATER CONTENT PERCENT (Wp ⊖W WI) (20 40 60 80)	ADDITIONAL LAB. TESTING	PIEZOMETER OR STANDPIPE INSTALLATION
		GROUND SURFACE		91.43							
0	Power Auger, 200 mm Diam. (Hollow Stem)	Refer to Borehole 17-52 for Stratigraphy		0.00							Bentonite Seal
1											Silica Sand
2											51 mm Diam. PVC #10 Slot Screen
3				88.38							Silica Sand
		End of Borehole		3.05							WL in Screen at Elev. 91.46 m on March 31, 2017
4											
5											
6											
7											
8											
9											
10											

DEPTH SCALE

1 : 50

Golder Associates

LOGGED: SN

CHECKED: SD

PROJECT: 1771847

RECORD OF BOREHOLE: 17-53

SHEET 1 OF 1

LOCATION: N 5013382.6 ;E 363144.5

BORING DATE: March 29, 2017

DATUM: CGVD28

SAMPLER HAMMER, 64kg; DROP, 760mm

PENETRATION TEST HAMMER, 64kg; DROP, 760mm

DEPTH SCALE METRES	BORING METHOD	SOIL PROFILE: DESCRIPTION	STRATA PLOT	ELEV. / DEPTH (m)	SAMPLES: NUMBER	TYPE	BLOWS/0.30m	DYNAMIC PENETRATION RESISTANCE, BLOWS/0.3m (20 40 60 80) / SHEAR STRENGTH Cu, kPa (nat V. + Q - ●; rem V. ⊕ U - ○) (20 40 60 80)	HYDRAULIC CONDUCTIVITY, k, cm/s (10^{-6} 10^{-5} 10^{-4} 10^{-3}) / WATER CONTENT PERCENT (Wp ⊖W Wl; 20 40 60 80)	ADDITIONAL LAB. TESTING	PIEZOMETER OR STANDPIPE INSTALLATION
		GROUND SURFACE		91.51							
0	Power Auger 200 mm Diam. (Hollow Stem)	TOPSOIL - (SM) SILTY SAND; brown; moist		0.00	1	GRAB	-				
		(CL/CI/CH) SILTY CLAY to CLAY; grey brown, contains silty sand seams (WEATHERED CRUST); cohesive, w>PL, very stiff to stiff		0.15							
1					2	SS	4				
					3	SS	2				
2											
3		(CI/CH) SILTY CLAY to CLAY; grey with black organic mottling, contains silty sand seams; cohesive, w>PL, firm		88.46 / 3.05	4	SS	WH				
4											
5					5	SS	WH				
6					6	SS	WH				
7				83.89							
		End of Borehole		7.62							
8											
9											
10											

DEPTH SCALE

1 : 50

Golder Associates

LOGGED: SN

CHECKED: SD

MIS-BHS 001 1771847.GPJ GAL-MIS.GDT 09/12/17 JEM

PROJECT: 1771847

RECORD OF BOREHOLE: 17-55

SHEET 1 OF 1

LOCATION: N 5013455.1 ;E 363274.4

BORING DATE: March 29, 2017

DATUM: CGVD28

SAMPLER HAMMER, 64kg; DROP, 760mm

PENETRATION TEST HAMMER, 64kg; DROP, 760mm

DEPTH SCALE METRES	BORING METHOD	SOIL PROFILE: DESCRIPTION	STRATA PLOT	ELEV. / DEPTH (m)	SAMPLES: NUMBER	TYPE	BLOWS/0.30m	DYNAMIC PENETRATION RESISTANCE, BLOWS/0.3m (20 40 60 80) / SHEAR STRENGTH Cu, kPa (nat V. + Q - ●; rem V. ⊕ U - ○) (20 40 60 80)	HYDRAULIC CONDUCTIVITY, k, cm/s (10^{-6} 10^{-5} 10^{-4} 10^{-3}) / WATER CONTENT PERCENT (Wp ⊖W WI) (20 40 60 80)	ADDITIONAL LAB. TESTING	PIEZOMETER OR STANDPIPE INSTALLATION
		GROUND SURFACE		91.44							
0	Power Auger, 200 mm Diam. (Hollow Stem)	TOPSOIL - (SM) SILTY SAND; brown, contains organic matter (rootlets); moist		0.00	1	GRAB	-				
		(CL/CI/CH) SILTY CLAY to CLAY; grey brown, contains silty sand layers (WEATHERED CRUST); cohesive, w>PL, very stiff		0.15							
1					2	SS	4				
					3	SS	2				
2								⊕ <96 +			
								⊕ <96 +			
3		(CI/CH) SILTY CLAY to CLAY; grey with black organic mottling, contains silty sand seams; cohesive, w>PL, firm		88.39 / 3.05	4	SS	WH				
4								⊕ +			
								⊕ +			
5					5	SS	WH				
								⊕ +			
								⊕ +			
6					6	SS	WH				
7								⊕ +			
								⊕ +			
				83.82				⊕ +			
		End of Borehole		7.62							
8											
9											
10											

DEPTH SCALE
1 : 50

Golder Associates

LOGGED: SN
CHECKED: SD

MIS-BHS 001 1771847.GPJ GAL-MIS.GDT 09/12/17 JEM

PROJECT: 1771847

RECORD OF BOREHOLE: 17-58

SHEET 1 OF 1

LOCATION: N 5013537.8 ;E 363416.5

BORING DATE: March 28, 2017

DATUM: CGVD28

SAMPLER HAMMER, 64kg; DROP, 760mm

PENETRATION TEST HAMMER, 64kg; DROP, 760mm

DEPTH SCALE METRES	BORING METHOD	SOIL PROFILE: DESCRIPTION	STRATA PLOT	ELEV. / DEPTH (m)	SAMPLES: NUMBER	TYPE	BLOWS/0.30m	DYNAMIC PENETRATION RESISTANCE, BLOWS/0.3m (20 40 60 80) / SHEAR STRENGTH Cu, kPa (nat V. + Q - ●; rem V. ⊕ U - ○) (20 40 60 80)	HYDRAULIC CONDUCTIVITY, k, cm/s (10^{-6} 10^{-5} 10^{-4} 10^{-3}) / WATER CONTENT PERCENT (Wp — W — Wl; 20 40 60 80)	ADDITIONAL LAB. TESTING	PIEZOMETER OR STANDPIPE INSTALLATION
		GROUND SURFACE		91.37							
0	Power Auger, 200 mm Diam. (Hollow Stem)	TOPSOIL - (SM) SILTY SAND; brown; moist		0.00							
		(CL/CI/CH) SILTY CLAY to CLAY; grey brown, contains silty sand layers (WEATHERED CRUST); cohesive, w>PL, very stiff to stiff		0.15	1	GRAB	-				
1					2	SS	5				
					3	SS	4				
2											
3				88.32							
		(CI/CH) SILTY CLAY to CLAY; grey with black organic mottling; cohesive, w>PL, firm		3.05	4	SS	WH				
4											
5					5	TP	PH				
6					6	SS	WH				
7											
				83.75							
		End of Borehole		7.62							
8											
9											
10											

DEPTH SCALE

1 : 50

Golder Associates

LOGGED: SN

CHECKED: SD

MIS-BHS 001 1771847.GPJ GAL-MIS.GDT 09/12/17 JEM

PROJECT: 1771847

RECORD OF BOREHOLE: 17-60

SHEET 1 OF 1

LOCATION: N 5013618.3 ;E 363548.7

BORING DATE: March 28, 2017

DATUM: CGVD28

SAMPLER HAMMER, 64kg; DROP, 760mm

PENETRATION TEST HAMMER, 64kg; DROP, 760mm

DEPTH SCALE METRES	BORING METHOD	SOIL PROFILE – DESCRIPTION	STRATA PLOT	ELEV. / DEPTH (m)	SAMPLES – NUMBER	TYPE	BLOWS/0.30m	DYNAMIC PENETRATION RESISTANCE, BLOWS/0.3m (20 40 60 80)	SHEAR STRENGTH Cu, kPa (nat V. + Q - ●; rem V. ⊕ U - ○) (20 40 60 80)	HYDRAULIC CONDUCTIVITY, k, cm/s (10^{-6} 10^{-5} 10^{-4} 10^{-3}) / WATER CONTENT PERCENT (Wp ⊖ W — Wl; 20 40 60 80)	ADDITIONAL LAB. TESTING	PIEZOMETER OR STANDPIPE INSTALLATION
		GROUND SURFACE		91.23								
0	Power Auger, 200 mm Diam. (Hollow Stem)	TOPSOIL - (SM) SILTY SAND; brown, contains organic matter (rootlets); moist		0.00								
		(CL/CI/CH) SILTY CLAY to CLAY; grey brown, contains silty sand layers (WEATHERED CRUST); cohesive, w>PL, very stiff to firm		0.15	1	GRAB	-					
1					2	SS	4					
					3	SS	2					
2												
		(CI/CH) SILTY CLAY to CLAY; grey with black organic mottling; cohesive, w>PL, soft to stiff		88.33 / 2.90								
3					4	SS	WH					
4												
5					5	SS	WH					
6					6	SS	WH					
7				83.91 / 7.32								
		(SM) gravelly SILTY SAND; grey, contains cobbles and boulders (GLACIAL TILL); non-cohesive, wet, very loose		83.61 / 7.62	7	SS	2					
		End of Borehole										
8												
9												
10												

DEPTH SCALE

1 : 50

Golder Associates

LOGGED: SN

CHECKED: SD

PROJECT: 18108333-1000

RECORD OF BOREHOLE: 18-15

SHEET 1 OF 1

LOCATION: N 5012915.4 ;E 362536.2

BORING DATE: October 25, 2018

DATUM: CGVD28

SAMPLER HAMMER, 64kg; DROP, 760mm

PENETRATION TEST HAMMER, 64kg; DROP, 760mm

DEPTH SCALE METRES	BORING METHOD	SOIL PROFILE: DESCRIPTION	STRATA PLOT	ELEV. / DEPTH (m)	SAMPLES: NUMBER	TYPE	BLOWS/0.30m	ADDITIONAL LAB. TESTING	PIEZOMETER OR STANDPIPE INSTALLATION
		GROUND SURFACE		91.23					
0	Power Auger, 200 mm Diam (Hollow Stem)	TOPSOIL - (SM) SILTY SAND; brown; moist		0.00	1	SS	7		
		(CI/CH) SILTY CLAY to CLAY; grey brown, contains silty sand seams (WEATHERED CRUST); cohesive, w>PL, stiff to very stiff		90.78 / 0.46					Bentonite Seal
1					2	SS	4		Silica Sand
					3	SS	4		
2									38 mm Diam. PVC #10 Slot Screen'B'
					4	SS	2		
		(CI/CH) SILTY CLAY to CLAY; grey, with black organic mottling, contains silty sand seams; cohesive, w>PL, firm		88.34 / 2.89					
3					5	SS	WH		
4									
					6	SS	WH		Native Backfill
5									
6					7	SS	WH		
7									Bentonite Seal
									Silica Sand
8					8	TP	PM	C	38 mm Diam. PVC #10 Slot Screen 'A'
9				82.09					
		End of Borehole		9.14					WL in screen 'A' at Elev. 91.38 m on April 30, 2019 WL in screen 'B' at Elev. 91.29 m on April 30, 2019
10									

DYNAMIC PENETRATION RESISTANCE, BLOWS/0.3m: 20, 40, 60, 80

SHEAR STRENGTH Cu, kPa: nat V. + Q - ●; rem V. ⊕ U - ○; 20, 40, 60, 80

HYDRAULIC CONDUCTIVITY, k, cm/s: 10^{-8}, 10^{-6}, 10^{-4}, 10^{-2}

WATER CONTENT PERCENT: Wp ⊢—○ W —⊣ Wl; 20, 40, 60, 80

DEPTH SCALE

1 : 50

GOLDER

LOGGED: DJG

CHECKED:

PROJECT: 18108333-1000

RECORD OF BOREHOLE: 18-16

SHEET 1 OF 1

LOCATION: N 5012991.9 ;E 362674.2

BORING DATE: October 25, 2018

DATUM: CGVD28

SAMPLER HAMMER, 64kg; DROP, 760mm

PENETRATION TEST HAMMER, 64kg; DROP, 760mm

DEPTH SCALE METRES	BORING METHOD	SOIL PROFILE – DESCRIPTION	STRATA PLOT	ELEV. / DEPTH (m)	SAMPLES – NUMBER	TYPE	BLOWS/0.30m	DYNAMIC PENETRATION RESISTANCE, BLOWS/0.3m (20 40 60 80) / SHEAR STRENGTH Cu, kPa (nat V. + Q - ●; rem V. ⊕ U - ○) (20 40 60 80)	HYDRAULIC CONDUCTIVITY, k, cm/s (10^{-8} 10^{-6} 10^{-4} 10^{-2}) / WATER CONTENT PERCENT (Wp ⊢—○W—⊣ Wl) (20 40 60 80)	ADDITIONAL LAB. TESTING	PIEZOMETER OR STANDPIPE INSTALLATION
		GROUND SURFACE		91.48							
0	Power Auger, 200 mm Diam. (Hollow Stem)	TOPSOIL - (CL/ML) sandy SILTY CLAY to CLAYEY SILT; dark brown		0.00							
		(ML) CLAYEY SILT, trace sand; grey brown, contains silty sand seams (WEATHERED CRUST); cohesive, w>PL, very stiff to stiff		91.20 / 0.28	1	SS	5				Bentonite Seal
1					2	SS	6		NP		Silica Sand
					3	SS	5				
2					4	SS	2				38 mm Diam. PVC #10 Slot Screen
3		(CI/CH) SILTY CLAY to CLAY; grey, with black organic mottling, contains silty sand seams; cohesive, w>PL, firm to soft		88.43 / 3.05	5	SS	WH				Silica Sand; Bentonite Seal
4								⊕ +			
5					6	SS	PM				Cave
6					7	SS	PM				
7								⊕ +			
		End of Borehole		83.86 / 7.62							
8											WL in screen at Elev. 91.35 m on April 30, 2019
9											
10											

DEPTH SCALE
1 : 50

GOLDER

LOGGED: RI
CHECKED:

PROJECT: 18108333-1000

RECORD OF BOREHOLE: 18-17

SHEET 1 OF 1

LOCATION: N 5013066.6 ;E 362813.3

BORING DATE: October 25-26, 2018

DATUM: CGVD28

SAMPLER HAMMER, 64kg; DROP, 760mm

PENETRATION TEST HAMMER, 64kg; DROP, 760mm

DEPTH SCALE METRES	BORING METHOD	SOIL PROFILE: DESCRIPTION	STRATA PLOT	ELEV. / DEPTH (m)	SAMPLES: NUMBER	TYPE	BLOWS/0.30m	ADDITIONAL LAB. TESTING	PIEZOMETER OR STANDPIPE INSTALLATION
		GROUND SURFACE		91.47					
0	Power Auger, 200 mm Diam. (Hollow Stem)	TOPSOIL- (SM) SILTY SAND: brown; moist		0.00	1	SS	5		
		(CI/CH) SILTY CLAY to CLAY; grey brown, contains silty sand seams (WEATHERED CRUST); cohesive, w>PL, stiff to very stiff		91.01 / 0.46					Bentonite Seal
1					2	SS	3		
									Silica Sand
					3	SS	3		
2									38 mm Diam PVC #10 Slot Screen
					4	SS	WH		
		(CI/CH) SILTY CLAY to CLAY; grey, with black organic mottling, contains silty sand seams; cohesive, w>PL, firm to soft		88.58 / 2.89					
3									Silica Sand
					5	SS	WH		
4									
					6	TP	PH	C	
5									Cave
6									
					7	SS	WH		
7									
		End of Borehole		83.85 / 7.62					
8									WL in screen at Elev. 91.49 m on April 30, 2019
9									
10									

DYNAMIC PENETRATION RESISTANCE, BLOWS/0.3m: 20, 40, 60, 80

SHEAR STRENGTH Cu, kPa: nat V. + Q - ●; rem V. ⊕ U - ○; 20, 40, 60, 80

HYDRAULIC CONDUCTIVITY, k, cm/s: 10^{-8}, 10^{-6}, 10^{-4}, 10^{-2}

WATER CONTENT PERCENT: Wp ⊢—○ W —⊣ Wl; 20, 40, 60, 80

DEPTH SCALE

1 : 50

GOLDER

LOGGED: DJG

CHECKED:

PROJECT: 18108333-1000

RECORD OF BOREHOLE: 18-18

SHEET 1 OF 1

LOCATION: N 5013140.7 ;E 362950.3

BORING DATE: October 26, 2018

DATUM: CGVD28

SAMPLER HAMMER, 64kg; DROP, 760mm

PENETRATION TEST HAMMER, 64kg; DROP, 760mm

DEPTH SCALE METRES	BORING METHOD	SOIL PROFILE: DESCRIPTION	STRATA PLOT	ELEV. / DEPTH (m)	SAMPLES: NUMBER	TYPE	BLOWS/0.30m	ADDITIONAL LAB. TESTING	PIEZOMETER OR STANDPIPE INSTALLATION
		GROUND SURFACE		91.54					
0	Power Auger, 200 mm Diam. (Hollow Stem)	TOPSOIL- (CL/ML) sandy SILTY CLAY to CLAYEY SILT; dark brown		0.00 / 91.31					
		(CI/CH) SILTY CLAY to CLAY; trace to some sand; grey brown, contains silty sand seams (WEATHERED CRUST); cohesive, w>PL, very stiff to stiff		0.23	1	SS	8		Bentonite Seal
1					2	SS	4	MH	Silica Sand
					3	SS	1		
2									38 mm Diam. PVC #10 Slot Screen 'B'
		(CI/CH) SILTY CLAY to CLAY; grey with black organic mottling, contains silty sand seams; cohesive, w>PL, soft to firm		88.65 / 2.89	4	SS	PM		
3									
4									
5					5	SS	WR		Native Backfill
6					6	SS	WR		
7									Bentonite Seal
									Silica Sand
8					7	SS	WR		38 mm Diam. PVC #10 Slot Screen 'A'
9				82.24					
		End of Borehole		9.30					WL in screen 'A' at Elev. 91.17 m on April 30, 2019 WL in screen 'B' at Elev. 91.11 m on April 30, 2019
10									

DYNAMIC PENETRATION RESISTANCE, BLOWS/0.3m: 20, 40, 60, 80

SHEAR STRENGTH Cu, kPa: nat V. + Q - ●; rem V. ⊕ U - ○; 20, 40, 60, 80

HYDRAULIC CONDUCTIVITY, k, cm/s: 10^{-8}, 10^{-6}, 10^{-4}, 10^{-2}

WATER CONTENT PERCENT: Wp ⊢—○ W —⊣ Wl; 20, 40, 60, 80

DEPTH SCALE

1 : 50

GOLDER

LOGGED: RI

CHECKED:

PROJECT: 18108333-1000

RECORD OF BOREHOLE: 18-19

SHEET 1 OF 1

LOCATION: N 5013203.9 ;E 363070.7

BORING DATE: October 26, 2018

DATUM: CGVD28

SAMPLER HAMMER, 64kg; DROP, 760mm

PENETRATION TEST HAMMER, 64kg; DROP, 760mm

DEPTH SCALE METRES	BORING METHOD	SOIL PROFILE: DESCRIPTION	STRATA PLOT	ELEV. / DEPTH (m)	SAMPLES: NUMBER	TYPE	BLOWS/0.30m	ADDITIONAL LAB. TESTING	PIEZOMETER OR STANDPIPE INSTALLATION
		GROUND SURFACE		91.26					
0	Power Auger, 200 mm Diam. (Hollow Stem)	TOPSOIL - (CL/ML) sandy SILTY CLAY to CLAYEY SILT; dark brown		0.00 / 91.03					
		(CI/CH) SILTY CLAY to CLAY, trace to some sand; grey brown, contains silty sand seams (WEATHERED CRUST); cohesive, w>PL, very stiff to stiff		0.23	1	SS	4		Bentonite Seal
1					2	SS	4		Silica Sand
2					3	SS	WH		38 mm Diam. PVC #10 Slot Screen
3		(CI/CH) SILTY CLAY to CLAY; grey with black organic mottling, contains silty sand seams; cohesive, w>PL, firm to soft		88.21 / 3.05	4	TP	PH	C	Silica Sand
4									
5					5	SS	PM		Cave
6					6	SS	PM		
7				83.64					
		End of Borehole		7.62					
8									WL in screen at Elev. 90.85 m on April 30, 2019
9									
10									

DYNAMIC PENETRATION RESISTANCE, BLOWS/0.3m: 20, 40, 60, 80

SHEAR STRENGTH Cu, kPa: nat V. + Q - ●; rem V. ⊕ U - ○; 20, 40, 60, 80

HYDRAULIC CONDUCTIVITY, k, cm/s: 10^{-8}, 10^{-6}, 10^{-4}, 10^{-2}

WATER CONTENT PERCENT: Wp ⊢—○ W —⊣ Wl; 20, 40, 60, 80

DEPTH SCALE

1 : 50

GOLDER

LOGGED: RI

CHECKED:

PROJECT: 18108333-1000

RECORD OF BOREHOLE: 18-20

SHEET 1 OF 1

LOCATION: N 5013313.4 ;E 363192.4

BORING DATE: October 26, 2018

DATUM: CGVD28

SAMPLER HAMMER, 64kg; DROP, 760mm

PENETRATION TEST HAMMER, 64kg; DROP, 760mm

DEPTH SCALE METRES	BORING METHOD	SOIL PROFILE: DESCRIPTION	STRATA PLOT	ELEV. / DEPTH (m)	SAMPLES: NUMBER	TYPE	BLOWS/0.30m	DYNAMIC PENETRATION RESISTANCE, BLOWS/0.3m (20 40 60 80) / SHEAR STRENGTH Cu, kPa (nat V. + Q - ●; rem V. ⊕ U - ○) (20 40 60 80)	HYDRAULIC CONDUCTIVITY, k, cm/s (10^{-8} 10^{-6} 10^{-4} 10^{-2}) / WATER CONTENT PERCENT (Wp ⊢—○W—⊣ Wl) (20 40 60 80)	ADDITIONAL LAB. TESTING	PIEZOMETER OR STANDPIPE INSTALLATION
		GROUND SURFACE		91.29							
0	Power Auger, 200 mm Diam. (Hollow Stem)	TOPSOIL - (SM) SILTY SAND: brown		0.00							
		(CI/CH) SILTY CLAY to CLAY; grey brown, contains silty sand seams (WEATHERED CRUST); cohesive, w>PL, stiff to very stiff		90.99 / 0.30	1	SS	8				Bentonite Seal
1					2	SS	4				Silica Sand
2					3	SS	3				38 mm Diam. PVC #10 Slot Screen
					4	SS	3				
3		(CI/CH) SILTY CLAY to CLAY; grey with black organic mottling, contains silty sand seams; cohesive, w>PL, firm		88.40 / 2.89	5	SS	WH				
4											
5					6	SS	WH				Cave
6					7	SS	WH				
7				83.67							
		End of Borehole		7.62							
8											WL in screen at Elev. 91.06 m on April 30, 2019
9											
10											

DEPTH SCALE
1 : 50

GOLDER

LOGGED: DJG
CHECKED:

PROJECT: 18108333-1000

RECORD OF BOREHOLE: 18-21

SHEET 1 OF 1

LOCATION: N 5013407.0 ;E 363310.1

BORING DATE: October 26, 2018

DATUM: CGVD28

SAMPLER HAMMER, 64kg; DROP, 760mm

PENETRATION TEST HAMMER, 64kg; DROP, 760mm

DEPTH SCALE METRES	BORING METHOD	SOIL PROFILE: DESCRIPTION	STRATA PLOT	ELEV. / DEPTH (m)	SAMPLES: NUMBER	TYPE	BLOWS/0.30m	DYNAMIC PENETRATION RESISTANCE, BLOWS/0.3m (20 40 60 80)	SHEAR STRENGTH Cu, kPa (nat V. + Q - ●; rem V. ⊕ U - ○) (20 40 60 80)	HYDRAULIC CONDUCTIVITY, k, cm/s (10^{-8} 10^{-6} 10^{-4} 10^{-2}) / WATER CONTENT PERCENT (Wp ⊢—○W—⊣ Wl) (20 40 60 80)	ADDITIONAL LAB. TESTING	PIEZOMETER OR STANDPIPE INSTALLATION
		GROUND SURFACE		91.36								
0	Power Auger, 200 mm Diam. (Hollow Stem)	TOPSOIL - (CL/ML) sandy SILTY CLAY to CLAYEY SILT, trace gravel; dark brown		0.00	1	SS	6					
		(CI/CH) SILTY CLAY to CLAY, trace to some sand; grey brown, contains silty sand seams (WEATHERED CRUST); cohesive, w>PL, very stiff to stiff		90.95 / 0.41	2	SS	5					Bentonite Seal
1												Silica Sand
					3	SS	2					
2												38 mm Diam. PVC #10 Slot Screen
3		(CI/CH) SILTY CLAY to CLAY; grey, with black organic mottling, contains silty sand seams; cohesive, w>PL, firm		88.31 / 3.05	4	SS	WH					Silica Sand Bentonite Seal
4												
5					5	TP	PH					
												Cave
6					6	SS	WR					
7												
		End of Borehole		83.74 / 7.62								
8												WL in screen at Elev. 91.19 m on April 30, 2019
9												
10												

DEPTH SCALE
1 : 50

GOLDER

LOGGED: RI
CHECKED:

PROJECT: 18108333-1000

RECORD OF BOREHOLE: 18-22

SHEET 1 OF 1

LOCATION: N 5013468.7 ;E 363456.4

BORING DATE: October 26, 2018

DATUM: CGVD28

SAMPLER HAMMER, 64kg; DROP, 760mm

PENETRATION TEST HAMMER, 64kg; DROP, 760mm

DEPTH SCALE METRES	BORING METHOD	SOIL PROFILE: DESCRIPTION	STRATA PLOT	ELEV. / DEPTH (m)	SAMPLES: NUMBER	TYPE	BLOWS/0.30m	ADDITIONAL LAB. TESTING	PIEZOMETER OR STANDPIPE INSTALLATION
		GROUND SURFACE		91.31					
0	Power Auger, 200 mm Diam. (Hollow Stem)	TOPSOIL - (SM) CLAYEY SILTY SAND; brown		0.00					
		(CI/CH) SILTY CLAY to CLAY; grey brown, contains silty sand seams (WEATHERED CRUST); cohesive, w>PL, very stiff to stiff		91.01 / 0.30	1	SS	6		Bentonite Seal
1					2	SS	7		Silica Sand
2					3	SS	4		38 mm Diam. PVC #10 Slot Screen 'B'
					4	SS	3		
		(CI/CH) SILTY CLAY to CLAY; grey, contains silty sand seams; cohesive, w>PL, firm		88.42 / 2.89					
3					5	SS	WH		
4									Native Backfill
5					6	SS	WH		
6					7	SS	WH		Bentonite Seal
7									Silica Sand
8					8	SS	WH		38 mm Diam. PVC #10 Slot Screen 'A'
9		End of Borehole		82.17 / 9.14					WL in screen 'A' at Elev. 91.49 m on April 30, 2019 WL in screen 'B' at Elev. 91.15 m on April 30, 2019
10									

DYNAMIC PENETRATION RESISTANCE, BLOWS/0.3m: 20, 40, 60, 80

SHEAR STRENGTH Cu, kPa: nat V. + Q - ●; rem V. ⊕ U - ○; 20, 40, 60, 80

HYDRAULIC CONDUCTIVITY, k, cm/s: 10^{-8}, 10^{-6}, 10^{-4}, 10^{-2}

WATER CONTENT PERCENT: Wp ⊢—○W—⊣ Wl; 20, 40, 60, 80

DEPTH SCALE

1 : 50

GOLDER

LOGGED: DJG

CHECKED:

PROJECT: 18108333-1000

RECORD OF BOREHOLE: 18-23

SHEET 1 OF 1

LOCATION: N 5013542.8 ;E 363593.8

BORING DATE: November 1, 2018

DATUM: CGVD28

SAMPLER HAMMER, 64kg; DROP, 760mm

PENETRATION TEST HAMMER, 64kg; DROP, 760mm

DEPTH SCALE METRES	BORING METHOD	SOIL PROFILE: DESCRIPTION	STRATA PLOT	ELEV. / DEPTH (m)	SAMPLES: NUMBER	TYPE	BLOWS/0.30m	DYNAMIC PENETRATION RESISTANCE, BLOWS/0.3m (20 40 60 80)	SHEAR STRENGTH Cu, kPa (nat V. + Q - ●; rem V. ⊕ U - ○) (20 40 60 80)	HYDRAULIC CONDUCTIVITY, k, cm/s (10^{-8} 10^{-6} 10^{-4} 10^{-2}) / WATER CONTENT PERCENT (Wp ⊢—○W—⊣ Wl) (20 40 60 80)	ADDITIONAL LAB. TESTING	PIEZOMETER OR STANDPIPE INSTALLATION
		GROUND SURFACE		91.32								
0	Power Auger, 200 mm Diam. (Hollow Stem)	TOPSOIL - (ML) CLAYEY SILT; dark brown		0.00 / 91.06								
		(CL/CI/CH) SILTY CLAY to CLAY; grey brown, contains silty sand seams (WEATHERED CRUST); cohesive, w>PL, stiff to very stiff		0.25	1	SS	3					Bentonite Seal
1					2	SS	4					Silica Sand
2					3	SS	3					38 mm Diam. PVC #10 Slot Screen
					4	SS	3					
				88.43								
3		(CI/CH) SILTY CLAY to CLAY; grey brown to grey, contains silty sand seams; cohesive, w>PL, stiff to firm		2.89	5	SS	PM					
4								⊕	+			
								⊕	+			
5					6	TP	PH					Cave
								⊕	+			
								⊕	+			
6				85.23								
		(SM) gravelly SILTY SAND; grey, contains silty clay seams (GLACIAL TILL); non-cohesive, wet, loose		6.09	7	SS	7			○	MH	
7					8	SS	5					
				83.86								
		End of Borehole		7.46								
8												WL in screen at Elev. 91.17 m on April 30, 2019
9												
10												

DEPTH SCALE

1 : 50

GOLDER

LOGGED: DJG

CHECKED:

PROJECT: 18108333-1000

RECORD OF BOREHOLE: 18-24

SHEET 1 OF 1

LOCATION: N 5013596.7 ;E 363722.6

BORING DATE: November 1, 2018

DATUM: CGVD28

SAMPLER HAMMER, 64kg; DROP, 760mm

PENETRATION TEST HAMMER, 64kg; DROP, 760mm

DEPTH SCALE METRES	BORING METHOD	SOIL PROFILE: DESCRIPTION	STRATA PLOT	ELEV. / DEPTH (m)	SAMPLES: NUMBER	TYPE	BLOWS/0.30m	DYNAMIC PENETRATION RESISTANCE, BLOWS/0.3m (20 40 60 80) / SHEAR STRENGTH Cu, kPa (nat V. + Q - ●, rem V. ⊕ U - ○) (20 40 60 80)	HYDRAULIC CONDUCTIVITY, k, cm/s (10^{-8} 10^{-6} 10^{-4} 10^{-2}) / WATER CONTENT PERCENT (Wp ⊢—○W—⊣ Wl) (20 40 60 80)	ADDITIONAL LAB. TESTING	PIEZOMETER OR STANDPIPE INSTALLATION
		GROUND SURFACE		91.23							
0	Power Auger, 200 mm Diam. (Hollow Stem)	TOPSOIL - (ML) CLAYEY SILT; dark brown		0.00							
		(CI/CH) SILTY CLAY to CLAY, some sand; grey brown, contains silty sand seams (WEATHERED CRUST); cohesive, w>PL, very stiff to stiff		90.93 / 0.30	1	SS	3				Bentonite Seal
1					2	SS	5				Silica Sand
					3	SS	3				
2		CI/CH) SILTY CLAY to CLAY; grey, contains silty sand seams; cohesive, w>PL, firm		89.10 / 2.13							38 mm Diam. PVC #10 Slot Screen
					4	SS	3				
3					5	SS	PM				
4								⊕ + ⊕ +			
					6	SS	PM				
5		(SM/ML) gravelly SILTY SAND to sandy SILT; grey, contains silty clay seams (GLACIAL TILL); non-cohesive, wet, very loose to compact		86.10 / 5.13							Cave
					7	SS	4				
6					8	SS	4				
7					9	SS	19				
				83.77							
		End of Borehole		7.46							
8											WL in screen at Elev. 91.11 m on April 30, 2019
9											
10											

DEPTH SCALE

1 : 50

GOLDER

LOGGED: DJG

CHECKED:

PROJECT: 18108333-1000

RECORD OF BOREHOLE: 18-25

SHEET 1 OF 1

LOCATION: N 5012863.7 ;E 362664.5

BORING DATE: October 29, 2018

DATUM: CGVD28

SAMPLER HAMMER, 64kg; DROP, 760mm

PENETRATION TEST HAMMER, 64kg; DROP, 760mm

DEPTH SCALE METRES	BORING METHOD	SOIL PROFILE: DESCRIPTION	STRATA PLOT	ELEV. / DEPTH (m)	SAMPLES: NUMBER	TYPE	BLOWS/0.30m	DYNAMIC PENETRATION RESISTANCE, BLOWS/0.3m (20 40 60 80) / SHEAR STRENGTH Cu, kPa (nat V. + Q - ●; rem V. ⊕ U - ○) (20 40 60 80)	HYDRAULIC CONDUCTIVITY, k, cm/s (10^{-8} 10^{-6} 10^{-4} 10^{-2}) / WATER CONTENT PERCENT (Wp ⊢—○ W —⊣ Wl) (20 40 60 80)	ADDITIONAL LAB. TESTING	PIEZOMETER OR STANDPIPE INSTALLATION
		GROUND SURFACE		91.24							
0	Power Auger, 200 mm Diam. (Hollow Stem)	TOPSOIL- (ML/CL) SILTY CLAY to CLAYEY SILT; dark brown		0.00 / 91.01							
		(CL-ML) SILTY CLAY to CLAYEY SILT, trace to some sand; grey brown, contains silty sand seams (WEATHERED CRUST); cohesive, w>PL, very stiff to stiff		0.23	1	SS	5				Bentonite Seal
1					2	SS	2		⊢○		Silica Sand
					3	SS	2				
2								>96 +			38 mm Diam. PVC #10 Slot Screen
								>96 +			
3		(CI/CH) SILTY CLAY to CLAY; grey, with black organic mottling; cohesive, w>PL, firm to soft		88.19 / 3.05	4	SS	1				
4								⊕ +			
								⊕ +			
5					5	SS	WH		⊢—○		Cave
								⊕ +			
6								⊕ +			
					6	SS	WH				
7								⊕ +			
								⊕ +			
		End of Borehole		83.62 / 7.62				⊕ +			
8											WL in screen at Elev. 91.16 m on April 30, 2019
9											
10											

DEPTH SCALE

1 : 50

GOLDER

LOGGED: RI

CHECKED:

PROJECT: 18108333-1000

RECORD OF BOREHOLE: 18-26

SHEET 1 OF 1

LOCATION: N 5012929.0 ;E 362807.5

BORING DATE: October 29, 2018

DATUM: CGVD28

SAMPLER HAMMER, 64kg; DROP, 760mm

PENETRATION TEST HAMMER, 64kg; DROP, 760mm

DEPTH SCALE METRES	BORING METHOD	SOIL PROFILE: DESCRIPTION	STRATA PLOT	ELEV. / DEPTH (m)	SAMPLES: NUMBER	TYPE	BLOWS/0.30m	ADDITIONAL LAB. TESTING	PIEZOMETER OR STANDPIPE INSTALLATION
		GROUND SURFACE		91.45					
0	Power Auger, 200 mm Diam. (Hollow Stem)	TOPSOIL - (SM) SILTY SAND; dark brown		0.00					
		(CL/ML) CLAYEY SILT to sandy SILT; grey brown; non-cohesive, moist, loose		91.15 / 0.30	1	SS	5		Bentonite Seal
1					2	SS	4		Silica Sand
		(CI/CH) SILTY CLAY to CLAY, some sand; grey brown, contains silty sand seams (WEATHERED CRUST); cohesive, w>PL, very stiff to stiff		90.08 / 1.37	3	SS	3		
2					4	SS	3		38 mm Diam. PVC #10 Slot Screen 'B'
		(CI/CH) SILTY CLAY to CLAY; grey, with black organic mottling, contains silty sand seams; cohesive, w>PL, firm to soft		88.56 / 2.89	5	SS	WH		
3									
4									
					6	SS	WH		Native Backfill
5									
6					7	TP	PH	C	
7									Bentonite Seal
									Silica Sand
8					8	SS	PM		38 mm Diam. PVC #10 Slot Screen 'A'
9				82.31					
		End of Borehole		9.14					WL in screen 'A' at Elev. 91.00 m on April 30, 2019 WL in screen 'B' at Elev. 91.07 m on April 30, 2019
10									

DYNAMIC PENETRATION RESISTANCE, BLOWS/0.3m: 20, 40, 60, 80

SHEAR STRENGTH Cu, kPa: nat V. + Q - ●; rem V. ⊕ U - ○; 20, 40, 60, 80

HYDRAULIC CONDUCTIVITY, k, cm/s: 10^{-8}, 10^{-6}, 10^{-4}, 10^{-2}

WATER CONTENT PERCENT: Wp ⊢—○W—⊣ Wl; 20, 40, 60, 80

DEPTH SCALE

1 : 50

GOLDER

LOGGED: DJG

CHECKED:

PROJECT: 18108333-1000

RECORD OF BOREHOLE: 18-27

SHEET 1 OF 1

LOCATION: N 5012986.9 ;E 362954.7

BORING DATE: October 29, 2018

DATUM: CGVD28

SAMPLER HAMMER, 64kg; DROP, 760mm

PENETRATION TEST HAMMER, 64kg; DROP, 760mm

DEPTH SCALE METRES	BORING METHOD	SOIL PROFILE – DESCRIPTION	STRATA PLOT	ELEV. / DEPTH (m)	SAMPLES – NUMBER	TYPE	BLOWS/0.30m	ADDITIONAL LAB. TESTING	PIEZOMETER OR STANDPIPE INSTALLATION
		GROUND SURFACE		91.38					
0	Power Auger, 200 mm Diam. (Hollow Stem)	TOPSOIL - (ML) CLAYEY sandy SILT, trace gravel; dark brown		0.00 / 91.18					
		(CL) sandy CLAYEY SILT; grey brown, (WEATHERED CRUST) cohesive, w>PL, stiff to very stiff		0.20	1	SS	4		Bentonite
1					2	SS	1		Silica Sand
		(CI/CH) SILTY CLAY to CLAY; grey brown, contains silty sand seams (WEATHERED CRUST); cohesive, w>PL, very stiff to stiff		89.86 / 1.52	3	SS	1		38 mm Diam. PVC #10 Slot Screen
2									
3		(CI/CH) SILTY CLAY to CLAY; grey, with black organic mottling, contains silty sand seams; cohesive, w>PL, firm to soft		88.33 / 3.05	4	SS	PM		Silica Sand
4									
5					5	SS	PM		Cave
6					6	SS	PM		
7				83.76 / 7.62					
		End of Borehole							
8									WL in screen at Elev. 91.37 m on April 30, 2019
9									
10									

DYNAMIC PENETRATION RESISTANCE, BLOWS/0.3m: 20, 40, 60, 80

SHEAR STRENGTH Cu, kPa: nat V. + Q - ●; rem V. ⊕ U - ○; 20, 40, 60, 80

HYDRAULIC CONDUCTIVITY, k, cm/s: 10^{-8}, 10^{-6}, 10^{-4}, 10^{-2}

WATER CONTENT PERCENT: Wp ⊢—○ W —⊣ Wl; 20, 40, 60, 80

DEPTH SCALE

1 : 50

GOLDER

LOGGED: RI

CHECKED:

PROJECT: 18108333-1000

RECORD OF BOREHOLE: 18-28

SHEET 1 OF 1

LOCATION: N 5013120.1 ;E 363120.3

BORING DATE: October 30, 2018

DATUM: CGVD28

SAMPLER HAMMER, 64kg; DROP, 760mm

PENETRATION TEST HAMMER, 64kg; DROP, 760mm

DEPTH SCALE METRES	BORING METHOD	SOIL PROFILE: DESCRIPTION	STRATA PLOT	ELEV. / DEPTH (m)	SAMPLES: NUMBER	TYPE	BLOWS/0.30m	ADDITIONAL LAB. TESTING	PIEZOMETER OR STANDPIPE INSTALLATION
		GROUND SURFACE		91.17					
0	Power Auger, 200 mm Diam. (Hollow Stem)	TOPSOIL - (ML) CLAYEY SILT; dark brown		0.00					
		(CI/CH) SILTY CLAY to CLAY, trace sand; grey brown, contains silty sand layers (WEATHERED CRUST); cohesive, w>PL, very stiff to stiff		90.87 / 0.30	1	SS	4		Bentonite Seal
1					2	SS	5		Silica Sand
					3	SS	3		
2					4	SS	3		38 mm Diam. PVC #10 Slot Screen
		(CI/CH) SILTY CLAY to CLAY; grey with black organic mottling, contains silty sand seams; cohesive, w>PL, firm to soft		88.28 / 2.89					
3					5	SS	WH		
4									
5					6	SS	WH		Cave
6									
					7	SS	WH		
7									
				83.55					
		End of Borehole		7.62					
8									WL in screen at Elev. 90.94 m on April 30, 2019
9									
10									

DYNAMIC PENETRATION RESISTANCE, BLOWS/0.3m: 20, 40, 60, 80

SHEAR STRENGTH Cu, kPa: nat V. + Q - ●; rem V. ⊕ U - ○; 20, 40, 60, 80

HYDRAULIC CONDUCTIVITY, k, cm/s: 10^{-8}, 10^{-6}, 10^{-4}, 10^{-2}

WATER CONTENT PERCENT: Wp ⊢—○W—⊣ Wl; 20, 40, 60, 80

DEPTH SCALE

1 : 50

GOLDER

LOGGED: DJG

CHECKED:

PROJECT: 18108333-1000

RECORD OF BOREHOLE: 18-29

SHEET 1 OF 1

LOCATION: N 5013204.1 ;E 363249.1

BORING DATE: October 30, 2018

DATUM: CGVD28

SAMPLER HAMMER, 64kg; DROP, 760mm

PENETRATION TEST HAMMER, 64kg; DROP, 760mm

DEPTH SCALE METRES	BORING METHOD	SOIL PROFILE: DESCRIPTION	STRATA PLOT	ELEV. / DEPTH (m)	SAMPLES: NUMBER	TYPE	BLOWS/0.30m	DYNAMIC PENETRATION RESISTANCE, BLOWS/0.3m (20 40 60 80) / SHEAR STRENGTH Cu, kPa (nat V. + Q - ●; rem V. ⊕ U - ○) (20 40 60 80)	HYDRAULIC CONDUCTIVITY, k, cm/s (10^{-8} 10^{-6} 10^{-4} 10^{-2}) / WATER CONTENT PERCENT (Wp ⊖W WI) (20 40 60 80)	ADDITIONAL LAB. TESTING	PIEZOMETER OR STANDPIPE INSTALLATION
		GROUND SURFACE		91.04							
0	Power Auger, 200 mm Diam. (Hollow Stem)	TOPSOIL - (ML) CLAYEY SILT; dark brown		0.00							
		(CI/CH) SILTY CLAY to CLAY; grey brown, contains silty sand seams (WEATHERED CRUST); cohesive, w>PL, very stiff		90.74 / 0.30	1	SS	7				Bentonite Seal
1					2	SS	4				Silica Sand
					3	SS	3				
2		(CI/CH) SILTY CLAY to CLAY; grey with black organic mottling, contains silty sand seams; cohesive, w>PL, firm		88.91 / 2.13							38 mm Diam. PVC #10 Slot Screen
					4	SS	3				
3					5	SS	WH				
4											
5					6	SS	PM				Cave
6											
					7	TP	PH				
7				83.42							
		End of Borehole		7.62							
8											WL in screen at Elev. 90.85 m on April 30, 2019
9											
10											

DEPTH SCALE
1 : 50

GOLDER

LOGGED: DJG
CHECKED:

PROJECT: 18108333-1000

RECORD OF BOREHOLE: 18-30

SHEET 1 OF 1

LOCATION: N 5013258.1 ;E 363330.0

BORING DATE: October 30, 2018

DATUM: CGVD28

SAMPLER HAMMER, 64kg; DROP, 760mm

PENETRATION TEST HAMMER, 64kg; DROP, 760mm

DEPTH SCALE METRES	BORING METHOD	SOIL PROFILE – DESCRIPTION	STRATA PLOT	ELEV. / DEPTH (m)	SAMPLES – NUMBER	TYPE	BLOWS/0.30m	DYNAMIC PENETRATION RESISTANCE, BLOWS/0.3m (20 40 60 80) / SHEAR STRENGTH Cu, kPa (nat V. + Q - ●; rem V. ⊕ U - ○) (20 40 60 80)	HYDRAULIC CONDUCTIVITY, k, cm/s (10^{-8} 10^{-6} 10^{-4} 10^{-2}) / WATER CONTENT PERCENT (Wp ⊢—○W—⊣ Wl) (20 40 60 80)	ADDITIONAL LAB. TESTING	PIEZOMETER OR STANDPIPE INSTALLATION
		GROUND SURFACE		90.95							
0	Power Auger, 200 mm Diam. (Hollow Stem)	TOPSOIL -(ML) CLAYEY SILT, some sand; dark brown		0.00 / 90.75							
		(CI/CH) SILTY CLAY to CLAY, trace to some sand; grey brown, contains silty sand seams (WEATHERED CRUST); cohesive, w>PL, very stiff to stiff		0.20	1	SS	7				Bentonite Seal
1					2	SS	4				Silica Sand
					3	SS	2	>96 +			
2											38 mm Diam. PVC #10 Slot Screen 'B'
3		(CI/CH) SILTY CLAY to CLAY; grey, contains silty sand seams; cohesive, firm		87.90 / 3.05	4	SS	WH				
4											
5					5	SS	PM				Native Backfill
6					7	SS	PM				
7											Bentonite Seal
											Silica Sand
8					8	SS	PM				38 mm Diam. PVC #10 Slot Screen 'A'
9		End of Borehole		81.80 / 9.15							WL in screen 'A' at Elev. 91.25 m on April 30, 2019; WL in screen 'B' at Elev. 90.94 m on April 30, 2019
10											

DEPTH SCALE

1 : 50

GOLDER

LOGGED: RI

CHECKED:

PROJECT: 18108333-1000

RECORD OF BOREHOLE: 18-31

SHEET 1 OF 1

LOCATION: N 5013362.7 ;E 363389.5

BORING DATE: October 31, 2018

DATUM: CGVD28

SAMPLER HAMMER, 64kg; DROP, 760mm

PENETRATION TEST HAMMER, 64kg; DROP, 760mm

DEPTH SCALE METRES	BORING METHOD	SOIL PROFILE: DESCRIPTION	STRATA PLOT	ELEV. / DEPTH (m)	SAMPLES: NUMBER	TYPE	BLOWS/0.30m	ADDITIONAL LAB. TESTING	PIEZOMETER OR STANDPIPE INSTALLATION
		GROUND SURFACE		91.06					
0	Power Auger, 200 mm Diam. (Hollow Stem)	TOPSOIL - (ML) CLAYEY SILT: dark brown		0.00					
		(CI/CH) SILTY CLAY to CLAY; grey brown, contains silty sand seams (WEATHERED CRUST); cohesive, w>PL, very stiff to stiff		90.76 / 0.30	1	SS	5		Bentonite Seal
1					2	SS	4	MH	Silica Sand
					3	SS	3		
2		(CI/CH) SILTY CLAY to CLAY; grey brown to grey with black organic mottling, contains silty sand seams; cohesive, w>PL, firm		88.93 / 2.13					38 mm Diam. PVC #10 Slot Screen
					4	SS	3		
3					5	SS	PM		
4									
5					6	SS	PH		Cave
6									
					7	SS	PH		
7				83.44					
		End of Borehole		7.62					
8									WL in screen at Elev. 90.94 m on April 30, 2019
9									
10									

DYNAMIC PENETRATION RESISTANCE, BLOWS/0.3m: 20, 40, 60, 80

SHEAR STRENGTH Cu, kPa: nat V. + Q - ●; rem V. ⊕ U - ○; 20, 40, 60, 80

HYDRAULIC CONDUCTIVITY, k, cm/s: 10^{-8}, 10^{-6}, 10^{-4}, 10^{-2}

WATER CONTENT PERCENT: Wp ⊢—○ W —⊣ Wl; 20, 40, 60, 80

DEPTH SCALE

1 : 50

GOLDER

LOGGED: DJG

CHECKED:

PROJECT: 18108333-1000

RECORD OF BOREHOLE: 18-32

SHEET 1 OF 1

LOCATION: N 5013379.1 ;E 363514.2

BORING DATE: October 31, 2018

DATUM: CGVD28

SAMPLER HAMMER, 64kg; DROP, 760mm

PENETRATION TEST HAMMER, 64kg; DROP, 760mm

DEPTH SCALE METRES	BORING METHOD	SOIL PROFILE: DESCRIPTION	STRATA PLOT	ELEV. / DEPTH (m)	SAMPLES: NUMBER	TYPE	BLOWS/0.30m	ADDITIONAL LAB. TESTING	PIEZOMETER OR STANDPIPE INSTALLATION
		GROUND SURFACE		90.83					
0	Power Auger, 200 mm Diam. (Hollow Stem)	TOPSOIL- (CL/ML) SILTY CLAY to CLAYEY SILT, trace to some sand; dark brown		0.00 / 90.58					
		(CI/CH) SILTY CLAY to CLAY, trace sand; grey brown, contains silty sand seams (WEATHERED CRUST); cohesive, w>PL, very stiff to stiff		0.25	1	SS	10		Bentonite Seal
1					2	SS	7		Silica Sand
2					3	SS	1		38 mm Diam. PVC #10 Slot Screen
3		(CI/CH) SILTY CLAY to CLAY; grey, contains silty sand seams; cohesive, w>PL, firm		87.78 / 3.05	4	SS	PM		Silica Sand
4									
5					5	SS	PM		Cave
6					6	SS	PM	C	
7				83.21					
		End of Borehole		7.62					
8									WL in screen at Elev. 90.74 m on April 30, 2019
9									
10									

DYNAMIC PENETRATION RESISTANCE, BLOWS/0.3m: 20, 40, 60, 80

SHEAR STRENGTH Cu, kPa: nat V. + Q - ●; rem V. ⊕ U - ○; 20, 40, 60, 80

HYDRAULIC CONDUCTIVITY, k, cm/s: 10^{-8}, 10^{-6}, 10^{-4}, 10^{-2}

WATER CONTENT PERCENT: Wp ⊢—○ W —⊣ Wl; 20, 40, 60, 80

DEPTH SCALE

1 : 50

GOLDER

LOGGED: RI

CHECKED:

PROJECT: 18108333-1000

RECORD OF BOREHOLE: 18-33

SHEET 1 OF 1

LOCATION: N 5013454.9 ;E 363649.3

BORING DATE: November 2, 2018

DATUM: CGVD28

SAMPLER HAMMER, 64kg; DROP, 760mm

PENETRATION TEST HAMMER, 64kg; DROP, 760mm

DEPTH SCALE METRES	BORING METHOD	SOIL PROFILE: DESCRIPTION	STRATA PLOT	ELEV. / DEPTH (m)	SAMPLES: NUMBER	TYPE	BLOWS/0.30m	ADDITIONAL LAB. TESTING	PIEZOMETER OR STANDPIPE INSTALLATION
		GROUND SURFACE		91.13					
0	Power Auger, 200 mm Diam. (Hollow Stem)	TOPSOIL - (CL/ML) SILTY CLAY to CLAYEY SILT, trace to some sand; dark brown		0.00 / 90.90					
		(CI/CH) SILTY CLAY to CLAY, some sand; grey brown, contains silty sand (WEATHERED CRUST); cohesive, w>PL, very stiff to stiff		0.23	1	SS	7		Bentonite Seal
1					2	SS	4	MH	Silica Sand
					3	SS	2		
2									38 mm Diam. PVC #10 Slot Screen
3		(CI/CH) SILTY CLAY to CLAY; grey; cohesive, w>PL, firm to soft		88.08 / 3.05	4	SS	WH		Silica Sand
4									
5					5	SS	1		
		(SM) gravelly SILTY SAND; grey, contains cobbles (GLACIAL TILL); non-cohesive, wet, compact		85.95 / 5.18	6	SS	13	MH	Cave
6		(SP) SAND, trace to some gravel; grey; non-cohesive, wet, very loose to loose		85.03 / 6.10	7	SS	4		
		(SM) gravelly SILTY SAND; grey, contains cobbles (GLACIAL TILL); non-cohesive, wet, very loose		84.58 / 6.55	8	SS	1		
7		End of Borehole		83.66 / 7.47					
8									WL in screen at Elev. 90.81 m on April 30, 2019
9									
10									

DYNAMIC PENETRATION RESISTANCE, BLOWS/0.3m: 20, 40, 60, 80

SHEAR STRENGTH Cu, kPa: nat V. + Q - ●; rem V. ⊕ U - ○; 20, 40, 60, 80

HYDRAULIC CONDUCTIVITY, k, cm/s: 10^{-8}, 10^{-6}, 10^{-4}, 10^{-2}

WATER CONTENT PERCENT: Wp ⊢—○ W —⊣ Wl; 20, 40, 60, 80

DEPTH SCALE

1 : 50

GOLDER

LOGGED: RI

CHECKED:

PROJECT: 18108333-1000

RECORD OF BOREHOLE: 18-34

SHEET 1 OF 1

LOCATION: N 5013533.9 ;E 363753.5

BORING DATE: November 1, 2018

DATUM: CGVD28

SAMPLER HAMMER, 64kg; DROP, 760mm

PENETRATION TEST HAMMER, 64kg; DROP, 760mm

DEPTH SCALE METRES	BORING METHOD	SOIL PROFILE – DESCRIPTION	ELEV. / DEPTH (m)	SAMPLES NUMBER	TYPE	BLOWS/0.30m	ADDITIONAL LAB. TESTING	PIEZOMETER OR STANDPIPE INSTALLATION
		GROUND SURFACE	91.30					
0	Power Auger, 200 mm Diam. (Hollow Stem)	TOPSOIL - (CL/ML) SILTY CLAY to CLAYEY SILT, trace to some sand; dark brown	0.00 / 91.05					
		(CI/CH) SILTY CLAY to CLAY, trace to some sand; grey brown, contains silty sand seams (WEATHERED CRUST); cohesive, w>PL, very stiff to stiff	0.25	1	SS	9		Bentonite Seal
1				2	SS	5		Silica Sand
				3	SS	3		
2								38 mm Diam. PVC #10 Slot Screen 'B'
		(CI/CH) SILTY CLAY to CLAY; grey; cohesive, w>PL, firm	88.56 / 2.74					
3				4	TP	PH		
		(SM) gravelly SILTY SAND; grey, contains cobbles (GLACIAL TILL); non-cohesive, wet, very loose to compact	87.64 / 3.66					
4				5	SS	4		
				6	SS	6		Native Backfill
5				7	SS	6		
6				8	SS	12		Bentonite Seal
7				9	SS	4		Silica Sand
		(SM) gravelly SILTY SAND; grey, contains cobbles (GLACIAL TILL); non-cohesive, wet, dense	83.68 / 7.62					
8				10	SS	48		38 mm Diam. PVC #10 Slot Screen 'A'
				11	SS	30		
9		End of Borehole Auger Refusal	82.31 / 8.99					WL in screen 'A' at Elev. 90.80 m on April 30, 2019 WL in screen 'B' at Elev. 90.60 m on April 30, 2019
10								

DYNAMIC PENETRATION RESISTANCE, BLOWS/0.3m: 20, 40, 60, 80

SHEAR STRENGTH Cu, kPa: nat V. + Q - ●; rem V. ⊕ U - ○; 20, 40, 60, 80

HYDRAULIC CONDUCTIVITY, k, cm/s: 10^{-8}, 10^{-6}, 10^{-4}, 10^{-2}

WATER CONTENT PERCENT: Wp ⊢—○W—⊣ Wl; 20, 40, 60, 80

DEPTH SCALE

1 : 50

GOLDER

LOGGED: RI

CHECKED:

PROJECT: 18108333-1000

RECORD OF BOREHOLE: 18-35

SHEET 1 OF 1

LOCATION: N 5013586.4 ;E 363871.9

BORING DATE: November 1, 2018

DATUM: CGVD28

SAMPLER HAMMER, 64kg; DROP, 760mm

PENETRATION TEST HAMMER, 64kg; DROP, 760mm

DEPTH SCALE METRES	BORING METHOD	SOIL PROFILE – DESCRIPTION	ELEV. / DEPTH (m)	SAMPLES NUMBER	TYPE	BLOWS/0.30m	ADDITIONAL LAB. TESTING	PIEZOMETER OR STANDPIPE INSTALLATION
		GROUND SURFACE	91.56					
0	Power Auger, 200 mm Diam. (Hollow Stem)	TOPSOIL - (SM/ML) SILTY SAND to sandy SILT; dark brown	0.00 / 91.33					
		(SM/ML) SILTY SAND to sandy SILT; grey brown, contains silty clay seams; non-cohesive, moist, loose	0.23 / 90.87	1	SS	6		Bentonite Seal
1		(CI/CH) SILTY CLAY to CLAY, trace sand; grey brown, contains silty sand seams (WEATHERED CRUST); cohesive, w>PL, very stiff to stiff	0.69	2	SS	4		Silica Sand
2				3	SS	3		38 mm diam. PVC #10 Slot Screen
3		(CI/CH) SILTY CLAY to CLAY; grey; cohesive, w>PL, firm to stiff	88.51 / 3.05	4	SS	PM		Silica Sand
4								
5				5	SS	PM		Cave
6		(SM) gravelly silty sand; grey, contains cobbles (GLACIAL TILL); non-cohesive, wet, loose to very loose	85.31 / 6.25	6	SS	5		
7				7	SS	4		
		End of Borehole	84.09 / 7.47					
8								WL in screen at Elev. 90.88 m on April 30, 2019
9								
10								

DYNAMIC PENETRATION RESISTANCE, BLOWS/0.3m: 20, 40, 60, 80

SHEAR STRENGTH Cu, kPa: nat V. + Q - ●; rem V. ⊕ U - ○; 20, 40, 60, 80

HYDRAULIC CONDUCTIVITY, k, cm/s: 10^{-8}, 10^{-6}, 10^{-4}, 10^{-2}

WATER CONTENT PERCENT: Wp ⊢—○ W —⊣ Wl; 20, 40, 60, 80

DEPTH SCALE

1 : 50

GOLDER

LOGGED: RI

CHECKED:

PROJECT: 18108333-1000

RECORD OF BOREHOLE: 18-36

SHEET 1 OF 1

LOCATION: N 5013000.9 ;E 363099.9

BORING DATE: October 30, 2018

DATUM: CGVD28

SAMPLER HAMMER, 64kg; DROP, 760mm

PENETRATION TEST HAMMER, 64kg; DROP, 760mm

DEPTH SCALE METRES	BORING METHOD	SOIL PROFILE: DESCRIPTION	STRATA PLOT	ELEV. / DEPTH (m)	SAMPLES: NUMBER	TYPE	BLOWS/0.30m	ADDITIONAL LAB. TESTING	PIEZOMETER OR STANDPIPE INSTALLATION
		GROUND SURFACE		91.19					
0	Power Auger, 200 mm Diam. (Hollow Stem)	TOPSOIL - (SM/ML) SILTY SAND to sandy SILT; dark brown		0.00					
		(ML/SM) SILTY SAND to sandy SILT; grey brown; non-cohesive, moist to wet, loose		90.94 / 0.25	1	SS	6		Bentonite Seal
		(CI/CH) SILTY CLAY to CLAY, trace sand; grey brown, contains silty sand seams(WEATHERED CRUST); cohesive, w>PL, stiff to very stiff		90.43 / 0.76	2	SS	3		Silica Sand
1									
2					3	SS	1		38 mm Diam. PVC #10 Slot Screen
3		(CI/CH) SILTY CLAY to CLAY; grey with black organic mottling; cohesive, w>PL, firm to soft		88.14 / 3.05	4	SS	PM		Silica Sand
4									
5					5	TP	WR	C	Cave
6					6	SS	PM		
7				83.57					
		End of Borehole		7.62					
8									WL in screen at Elev. 91.19 m on April 30, 2019
9									
10									

DYNAMIC PENETRATION RESISTANCE, BLOWS/0.3m: 20, 40, 60, 80

SHEAR STRENGTH Cu, kPa: nat V. + Q - ●; rem V. ⊕ U - ○; 20, 40, 60, 80

HYDRAULIC CONDUCTIVITY, k, cm/s: 10^{-8}, 10^{-6}, 10^{-4}, 10^{-2}

WATER CONTENT PERCENT: Wp ⊢—○W—⊣ Wl; 20, 40, 60, 80

DEPTH SCALE

1 : 50

GOLDER

LOGGED: RI

CHECKED:

PROJECT: 18108333-1000

RECORD OF BOREHOLE: 18-37

SHEET 1 OF 1

LOCATION: N 5013045.5 ;E 363220.1

BORING DATE: October 30, 2018

DATUM: CGVD28

SAMPLER HAMMER, 64kg; DROP, 760mm

PENETRATION TEST HAMMER, 64kg; DROP, 760mm

DEPTH SCALE METRES	BORING METHOD	SOIL PROFILE: DESCRIPTION	STRATA PLOT	ELEV. / DEPTH (m)	SAMPLES: NUMBER	TYPE	BLOWS/0.30m	ADDITIONAL LAB. TESTING	PIEZOMETER OR STANDPIPE INSTALLATION
		GROUND SURFACE		91.29					
0	Power Auger, 200 mm Diam. (Hollow Stem)	TOPSOIL - (SM/ML) SILTY SAND to sandy SILT; dark brown		0.00 / 91.04					
		(SM/ML) SILTY SAND to sandy SILT; grey brown; non-cohesive, moist, loose		0.25 / 90.39	1	SS	7		Bentonite Seal
1		(CI/CH) SILTY CLAY to CLAY, trace to some sand; grey brown, contains silty sand seams (WEATHERED CRUST); cohesive, w>PL, very stiff to stiff		0.90 / 88.24	2	SS	8	MH	Silica Sand
					3	SS	3		38 mm Diam. PVC #10 Slot Screen
3		(CI/CH) SILTY CLAY to CLAY; grey with black organic mottling, contains silty sand seams; cohesive, w>PL, firm		3.05	4	SS	WH		
4									
5					5	SS	PM		Cave
6					6	SS	WR		
7				83.67					
		End of Borehole		7.62					
8									WL in screen at Elev. 90.83 m on April 30, 2019
9									
10									

DYNAMIC PENETRATION RESISTANCE, BLOWS/0.3m: 20, 40, 60, 80

SHEAR STRENGTH Cu, kPa: nat V. + Q - ●; rem V. ⊕ U - ○; 20, 40, 60, 80

HYDRAULIC CONDUCTIVITY, k, cm/s: 10^{-8}, 10^{-6}, 10^{-4}, 10^{-2}

WATER CONTENT PERCENT: Wp ⊢—○ W —⊣ Wl; 20, 40, 60, 80

DEPTH SCALE

1 : 50

GOLDER

LOGGED: RI

CHECKED:

The Golder Associates Ltd. Soil Classification System is based on the Unified Soil Classification System (USCS)

Organic or Inorganic	Soil Group	Type of Soil		Gradation or Plasticity	$Cu = \frac{D_{60}}{D_{10}}$	$Cc = \frac{(D_{30})^2}{D_{10} x D_{60}}$	Organic Content	USCS Group Symbol	Group Name
INORGANIC (Organic Content ≤30% by mass)	COARSE-GRAINED SOILS (>50% by mass is larger than 0.075 mm)	GRAVELS (>50% by mass of coarse fraction is larger than 4.75 mm)	Gravels with ≤12% fines (by mass)	Poorly Graded	<4	≤1 or ≥3	≤30%	GP	GRAVEL
				Well Graded	≥4	1 to 3		GW	GRAVEL
			Gravels with >12% fines (by mass)	Below A Line	n/a			GM	SILTY GRAVEL
				Above A Line	n/a			GC	CLAYEY GRAVEL
		SANDS (≥50% by mass of coarse fraction is smaller than 4.75 mm)	Sands with ≤12% fines (by mass)	Poorly Graded	<6	≤1 or ≥3		SP	SAND
				Well Graded	≥6	1 to 3		SW	SAND
			Sands with >12% fines (by mass)	Below A Line	n/a			SM	SILTY SAND
				Above A Line	n/a			SC	CLAYEY SAND

Organic or Inorganic	Soil Group	Type of Soil	Laboratory Tests	Field Indicators: Dilatancy	Dry Strength	Shine Test	Thread Diameter	Toughness (of 3 mm thread)	Organic Content	USCS Group Symbol	Primary Name
INORGANIC (Organic Content ≤30% by mass)	FINE-GRAINED SOILS (≥50% by mass is smaller than 0.075 mm)	SILTS (Non-Plastic or PI and LL plot below A-Line on Plasticity Chart below)	Liquid Limit <50	Rapid	None	None	>6 mm	N/A (can't roll 3 mm thread)	<5%	ML	SILT
				Slow	None to Low	Dull	3mm to 6 mm	None to low	<5%	ML	CLAYEY SILT
				Slow to very slow	Low to medium	Dull to slight	3mm to 6 mm	Low	5% to 30%	OL	ORGANIC SILT
			Liquid Limit ≥50	Slow to very slow	Low to medium	Slight	3mm to 6 mm	Low to medium	<5%	MH	CLAYEY SILT
				None	Medium to high	Dull to slight	1 mm to 3 mm	Medium to high	5% to 30%	OH	ORGANIC SILT
		CLAYS (PI and LL plot above A-Line on Plasticity Chart below)	Liquid Limit <30	None	Low to medium	Slight to shiny	~ 3 mm	Low to medium	0% to 30% (see Note 2)	CL	SILTY CLAY
			Liquid Limit 30 to 50	None	Medium to high	Slight to shiny	1 mm to 3 mm	Medium		CI	SILTY CLAY
			Liquid Limit ≥50	None	High	Shiny	<1 mm	High		CH	CLAY
HIGHLY ORGANIC SOILS (Organic Content >30% by mass)		Peat and mineral soil mixtures							30% to 75%	PT	SILTY PEAT, SANDY PEAT
		Predominantly peat, may contain some mineral soil, fibrous or amorphous peat							75% to 100%		PEAT

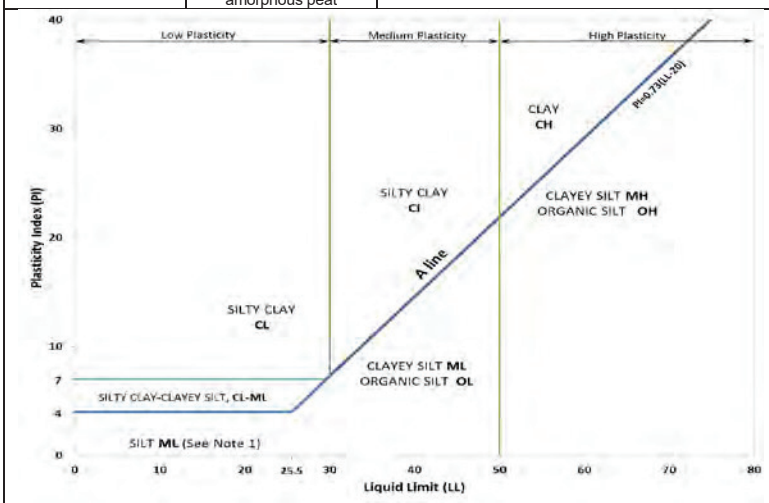

Note 1 – Fine grained materials with PI and LL that plot in this area are named (ML) SILT with slight plasticity. Fine-grained materials which are non-plastic (i.e. a PL cannot be measured) are named SILT.
Note 2 – For soils with <5% organic content, include the descriptor "trace organics" for soils with between 5% and 30% organic content include the prefix "organic" before the Primary name.

Dual Symbol — A dual symbol is two symbols separated by a hyphen, for example, GP-GM, SW-SC and CL-ML.
For non-cohesive soils, the dual symbols must be used when the soil has between 5% and 12% fines (i.e. to identify transitional material between "clean" and "dirty" sand or gravel.
For cohesive soils, the dual symbol must be used when the liquid limit and plasticity index values plot in the CL-ML area of the plasticity chart (see Plasticity Chart at left).

Borderline Symbol — A borderline symbol is two symbols separated by a slash, for example, CL/CI, GM/SM, CL/ML.
A borderline symbol should be used to indicate that the soil has been identified as having properties that are on the transition between similar materials. In addition, a borderline symbol may be used to indicate a range of similar soil types within a stratum.

ABBREVIATIONS AND TERMS USED ON RECORDS OF BOREHOLES AND TEST PITS

PARTICLE SIZES OF CONSTITUENTS

Soil Constituent	Particle Size Description	Millimetres	Inches (US Std. Sieve Size)
BOULDERS	Not Applicable	>300	>12
COBBLES	Not Applicable	75 to 300	3 to 12
GRAVEL	Coarse Fine	19 to 75 4.75 to 19	0.75 to 3 (4) to 0.75
SAND	Coarse Medium Fine	2.00 to 4.75 0.425 to 2.00 0.075 to 0.425	(10) to (4) (40) to (10) (200) to (40)
SILT/CLAY	Classified by plasticity	<0.075	< (200)

MODIFIERS FOR SECONDARY AND MINOR CONSTITUENTS

Percentage by Mass	Modifier
>35	Use 'and' to combine major constituents (*i.e.,* SAND and GRAVEL)
> 12 to 35	Primary soil name prefixed with "gravelly, sandy, SILTY, CLAYEY" as applicable
> 5 to 12	some
≤ 5	trace

PENETRATION RESISTANCE

Standard Penetration Resistance (SPT), N:

The number of blows by a 63.5 kg (140 lb) hammer dropped 760 mm (30 in.) required to drive a 50 mm (2 in.) split-spoon sampler for a distance of 300 mm (12 in.). Values reported are as recorded in the field and are uncorrected.

Cone Penetration Test (CPT)

An electronic cone penetrometer with a 60° conical tip and a project end area of 10 cm^2 pushed through ground at a penetration rate of 2 cm/s. Measurements of tip resistance (q_t), porewater pressure (u) and sleeve frictions are recorded electronically at 25 mm penetration intervals.

Dynamic Cone Penetration Resistance (DCPT); N_d:

The number of blows by a 63.5 kg (140 lb) hammer dropped 760 mm (30 in.) to drive uncased a 50 mm (2 in.) diameter, 60° cone attached to "A" size drill rods for a distance of 300 mm (12 in.).

PH: Sampler advanced by hydraulic pressure
PM: Sampler advanced by manual pressure
WH: Sampler advanced by static weight of hammer
WR: Sampler advanced by weight of sampler and rod

SAMPLES

AS	Auger sample
BS	Block sample
CS	Chunk sample
DD	Diamond Drilling
DO or DP	Seamless open ended, driven or pushed tube sampler – note size
DS	Denison type sample
GS	Grab Sample
MC	Modified California Samples
MS	Modified Shelby (for frozen soil)
RC	Rock core
SC	Soil core
SS	Split spoon sampler – note size
ST	Slotted tube
TO	Thin-walled, open – note size (Shelby tube)
TP	Thin-walled, piston – note size (Shelby tube)
WS	Wash sample

SOIL TESTS

w	water content
PL , w_p	plastic limit
LL , w_L	liquid limit
C	consolidation (oedometer) test
CHEM	chemical analysis (refer to text)
CID	consolidated isotropically drained triaxial test[1]
CIU	consolidated isotropically undrained triaxial test with porewater pressure measurement[1]
D_R	relative density (specific gravity, Gs)
DS	direct shear test
GS	specific gravity
M	sieve analysis for particle size
MH	combined sieve and hydrometer (H) analysis
MPC	Modified Proctor compaction test
SPC	Standard Proctor compaction test
OC	organic content test
SO_4	concentration of water-soluble sulphates
UC	unconfined compression test
UU	unconsolidated undrained triaxial test
V (FV)	field vane (LV-laboratory vane test)
γ	unit weight

1. Tests anisotropically consolidated prior to shear are shown as CAD, CAU.

NON-COHESIVE (COHESIONLESS) SOILS

Compactness[2]

Term	SPT 'N' (blows/0.3m)[1]
Very Loose	0 to 4
Loose	4 to 10
Compact	10 to 30
Dense	30 to 50
Very Dense	>50

1. SPT 'N' in accordance with ASTM D1586, uncorrected for the effects of overburden pressure.
2. Definition of compactness terms are based on SPT 'N' ranges as provided in Terzaghi, Peck and Mesri (1996). Many factors affect the recorded SPT 'N' value, including hammer efficiency (which may be greater than 60% in automatic trip hammers), overburden pressure, groundwater conditions, and grainsize. As such, the recorded SPT 'N' value(s) should be considered only an approximate guide to the soil compactness. These factors need to be considered when evaluating the results, and the stated compactness terms should not be relied upon for design or construction.

Field Moisture Condition

Term	Description
Dry	Soil flows freely through fingers.
Moist	Soils are darker than in the dry condition and may feel cool.
Wet	As moist, but with free water forming on hands when handled.

COHESIVE SOILS

Consistency

Term	Undrained Shear Strength (kPa)	SPT 'N'[1,2] (blows/0.3m)
Very Soft	<12	0 to 2
Soft	12 to 25	2 to 4
Firm	25 to 50	4 to 8
Stiff	50 to 100	8 to 15
Very Stiff	100 to 200	15 to 30
Hard	>200	>30

1. SPT 'N' in accordance with ASTM D1586, uncorrected for overburden pressure effects; approximate only.
2. SPT 'N' values should be considered ONLY an approximate guide to consistency; for sensitive clays (e.g., Champlain Sea clays), the N-value approximation for consistency terms does NOT apply. Rely on direct measurement of undrained shear strength or other manual observations.

Water Content

Term	Description
w < PL	Material is estimated to be drier than the Plastic Limit.
w ~ PL	Material is estimated to be close to the Plastic Limit.
w > PL	Material is estimated to be wetter than the Plastic Limit.

Unless otherwise stated, the symbols employed in the report are as follows:

I. GENERAL

π	3.1416
ln x	natural logarithm of x
$\log_{10}$	x or log x, logarithm of x to base 10
g	acceleration due to gravity
t	time

II. STRESS AND STRAIN

γ	shear strain
Δ	change in, e.g. in stress: $\Delta\sigma$
ε	linear strain
ε_v	volumetric strain
η	coefficient of viscosity
υ	Poisson's ratio
σ	total stress
σ'	effective stress ($\sigma' = \sigma - u$)
σ'_{vo}	initial effective overburden stress
$\sigma_1, \sigma_2, \sigma_3$	principal stress (major, intermediate, minor)
σ_{oct}	mean stress or octahedral stress $= (\sigma_1 + \sigma_2 + \sigma_3)/3$
τ	shear stress
u	porewater pressure
E	modulus of deformation
G	shear modulus of deformation
K	bulk modulus of compressibility

III. SOIL PROPERTIES

(a) Index Properties

$\rho(\gamma)$	bulk density (bulk unit weight)*
$\rho_d(\gamma_d)$	dry density (dry unit weight)
$\rho_w(\gamma_w)$	density (unit weight) of water
$\rho_s(\gamma_s)$	density (unit weight) of solid particles
γ'	unit weight of submerged soil ($\gamma' = \gamma - \gamma_w$)
D_R	relative density (specific gravity) of solid particles ($D_R = \rho_s / \rho_w$) (formerly G_s)
e	void ratio
n	porosity
S	degree of saturation

* Density symbol is ρ. Unit weight symbol is γ where $\gamma = \rho g$ (i.e. mass density multiplied by acceleration due to gravity)

(a) Index Properties (continued)

w	water content
w_l or LL	liquid limit
w_p or PL	plastic limit
I_p or PI	plasticity index = $(w_l - w_p)$
NP	non-plastic
w_s	shrinkage limit
I_L	liquidity index = $(w - w_p) / I_p$
I_C	consistency index = $(w_l - w) / I_p$
e_{max}	void ratio in loosest state
e_{min}	void ratio in densest state
I_D	density index = $(e_{max} - e) / (e_{max} - e_{min})$ (formerly relative density)

(b) Hydraulic Properties

h	hydraulic head or potential
q	rate of flow
v	velocity of flow
i	hydraulic gradient
k	hydraulic conductivity (coefficient of permeability)
j	seepage force per unit volume

(c) Consolidation (one-dimensional)

C_c	compression index (normally consolidated range)
C_r	recompression index (over-consolidated range)
C_s	swelling index
C_α	secondary compression index
m_v	coefficient of volume change
c_v	coefficient of consolidation (vertical direction)
c_h	coefficient of consolidation (horizontal direction)
T_v	time factor (vertical direction)
U	degree of consolidation
σ'_p	pre-consolidation stress
OCR	over-consolidation ratio = σ'_p / σ'_{vo}

(d) Shear Strength

τ_p, τ_r	peak and residual shear strength
ϕ'	effective angle of internal friction
δ	angle of interface friction
μ	coefficient of friction = tan δ
c'	effective cohesion
c_u, s_u	undrained shear strength ($\phi = 0$ analysis)
p	mean total stress $(\sigma_1 + \sigma_3)/2$
p'	mean effective stress $(\sigma'_1 + \sigma'_3)/2$
q	$(\sigma_1 - \sigma_3)/2$ or $(\sigma'_1 - \sigma'_3)/2$
q_u	compressive strength $(\sigma_1 - \sigma_3)$
S_t	sensitivity

Notes: 1 $\tau = c' + \sigma' \tan \phi'$

2 shear strength = (compressive strength)/2

PROJECT: 1771847

RECORD OF BOREHOLE: 17-01

SHEET 1 OF 1

LOCATION: N 5013143.8 ;E 361309.9

BORING DATE: February 2, 2017

DATUM: CGVD28

SAMPLER HAMMER, 64kg; DROP, 760mm

PENETRATION TEST HAMMER, 64kg; DROP, 760mm

DEPTH SCALE METRES	BORING METHOD	SOIL PROFILE: DESCRIPTION	STRATA PLOT	ELEV. / DEPTH (m)	SAMPLES: NUMBER	TYPE	BLOWS/0.30m	DYNAMIC PENETRATION RESISTANCE, BLOWS/0.3m (20 40 60 80) / SHEAR STRENGTH Cu, kPa (nat V. + Q - ●; rem V. ⊕ U - ○) (20 40 60 80)	HYDRAULIC CONDUCTIVITY, k, cm/s (10^{-6} 10^{-5} 10^{-4} 10^{-3}) / WATER CONTENT PERCENT (Wp ⊢—○W—⊣ Wl) (20 40 60 80)	ADDITIONAL LAB. TESTING	PIEZOMETER OR STANDPIPE INSTALLATION
		GROUND SURFACE		91.76							
0	Power Auger, 200 mm Diam. (Hollow Stem)	TOPSOIL - (SM) SILTY SAND; dark brown; moist		0.00							
		(CL/CI/CH) SILTY CLAY to CLAY; grey brown, contains silty sand layers (WEATHERED CRUST); cohesive, w>PL, very stiff to stiff		0.16							Bentonite Seal
1					1	SS	3				
					2	SS	1				Bentonite and Cuttings Mix
2											
				89.02							Bentonite Seal
		(CI/CH) SILTY CLAY to CLAY; grey with black organic mottling; cohesive, w>PL, firm		2.74							Silica Sand
3					3	TP	PH			C	Standpipe
4											Silica Sand
					4	SS	WH				
5											
6											Native Backfill
					5	SS	WH				
7											
				84.14							
		End of Borehole		7.62							W.L. in Standpipe at Elev. 91.07 m on February 21, 2017
8											
9											
10											

DEPTH SCALE

1 : 50

Golder Associates

LOGGED: DG

CHECKED: SD

MIS-BHS 001 1771847.GPJ GAL-MIS.GDT 09/12/17 JEM

PROJECT: 1771847

RECORD OF BOREHOLE: 17-02

SHEET 1 OF 1

LOCATION: N 5013269.0 ;E 361573.3

BORING DATE: February 1, 2017

DATUM: CGVD28

SAMPLER HAMMER, 64kg; DROP, 760mm

PENETRATION TEST HAMMER, 64kg; DROP, 760mm

DEPTH SCALE METRES	BORING METHOD	SOIL PROFILE: DESCRIPTION	STRATA PLOT	ELEV. / DEPTH (m)	SAMPLES: NUMBER	TYPE	BLOWS/0.30m	DYNAMIC PENETRATION RESISTANCE, BLOWS/0.3m (20 40 60 80) / SHEAR STRENGTH Cu, kPa (nat V. + Q - ●; rem V. ⊕ U - ○) (20 40 60 80)	HYDRAULIC CONDUCTIVITY, k, cm/s (10^{-6} 10^{-5} 10^{-4} 10^{-3}) / WATER CONTENT PERCENT (Wp ⊖W Wl; 20 40 60 80)	ADDITIONAL LAB. TESTING	PIEZOMETER OR STANDPIPE INSTALLATION
		GROUND SURFACE		91.75							
0	Power Auger, 200 mm Diam. (Hollow Stem)	TOPSOIL - (SM) SILTY SAND; dark brown; moist		0.07							
		(CL/CI/CH) SILTY CLAY to CLAY, some sand; grey brown (WEATHERED CRUST); cohesive, w>PL, very stiff to stiff			1	SS	8				
1					2	SS	4				
					3	SS	2				
2											
		(CI/CH) SILTY CLAY to CLAY; grey with black organic mottling; cohesive, w>PL, stiff to firm		89.01 / 2.74							
3					4	SS	WH				
4											
5					5	SS	WH				
6					6	SS	WH				
7				84.13							
		End of Borehole		7.62							
8											
9											
10											

DEPTH SCALE

1 : 50

Golder Associates

LOGGED: DG

CHECKED: SD

MIS-BHS 001 1771847.GPJ GAL-MIS.GDT 09/12/17 JEM

PROJECT: 1771847

RECORD OF BOREHOLE: 17-03

SHEET 1 OF 1

LOCATION: N 5012851.9 ;E 361409.3

BORING DATE: February 1, 2017

DATUM: CGVD28

SAMPLER HAMMER, 64kg; DROP, 760mm

PENETRATION TEST HAMMER, 64kg; DROP, 760mm

DEPTH SCALE METRES	BORING METHOD	SOIL PROFILE: DESCRIPTION	STRATA PLOT	ELEV. / DEPTH (m)	SAMPLES: NUMBER	TYPE	BLOWS/0.30m	DYNAMIC PENETRATION RESISTANCE, BLOWS/0.3m (20 40 60 80) / SHEAR STRENGTH Cu, kPa (nat V. + Q - ●; rem V. ⊕ U - ○) (20 40 60 80)	HYDRAULIC CONDUCTIVITY, k, cm/s (10^{-6} 10^{-5} 10^{-4} 10^{-3}) / WATER CONTENT PERCENT (Wp ⊖ W Wl; 20 40 60 80)	ADDITIONAL LAB. TESTING	PIEZOMETER OR STANDPIPE INSTALLATION
		GROUND SURFACE		91.20							
0	Power Auger, 200 mm Diam. (Hollow Stem)	TOPSOIL - (SM) sandy SILT; dark brown; moist		0.00							
		(CL/CI/CH) SILTY CLAY to CLAY; grey brown (WEATHERED CRUST); cohesive, w>PL, very stiff to stiff		0.13							
1					1	SS	3				
					2	SS	WH				
2								⊕ +			
				88.46				⊕ +			
		(CI/CH) SILTY CLAY to CLAY; grey with black organic mottling; cohesive, w>PL, soft to firm		2.74							
3					3	SS	WH				
4								⊕ +			
								⊕ +			
					4	SS	WH				
5											
								⊕ +			
								⊕ +			
6											
					5	SS	WR				
7								⊕ +			
								⊕ +			
				83.58				⊕ +			
		End of Borehole		7.62							
8											
9											
10											

DEPTH SCALE

1 : 50

Golder Associates

LOGGED: DG

CHECKED: SD

MIS-BHS 001 1771847.GPJ GAL-MIS.GDT 09/12/17 JEM

PROJECT: 1771847

RECORD OF BOREHOLE: 17-04

SHEET 1 OF 1

LOCATION: N 5013010.7 ;E 361684.6

BORING DATE: February 1, 2017

DATUM: CGVD28

SAMPLER HAMMER, 64kg; DROP, 760mm

PENETRATION TEST HAMMER, 64kg; DROP, 760mm

DEPTH SCALE METRES	BORING METHOD	SOIL PROFILE: DESCRIPTION	STRATA PLOT	ELEV. / DEPTH (m)	SAMPLES: NUMBER	TYPE	BLOWS/0.30m	DYNAMIC PENETRATION RESISTANCE, BLOWS/0.3m (20 40 60 80) / SHEAR STRENGTH Cu, kPa (nat V. + Q - ●; rem V. ⊕ U - ○) (20 40 60 80)	HYDRAULIC CONDUCTIVITY, k, cm/s (10^{-6} 10^{-5} 10^{-4} 10^{-3}) / WATER CONTENT PERCENT (Wp — W — Wl; 20 40 60 80)	ADDITIONAL LAB. TESTING	PIEZOMETER OR STANDPIPE INSTALLATION
		GROUND SURFACE		91.21							
0	Power Auger, 200 mm Diam. (Hollow Stem)	TOPSOIL - (SM) SILTY SAND; dark brown; moist		0.00							
		(CL/CI/CH) SILTY CLAY to CLAY, some sand; grey brown, contains silt layers (WEATHERED CRUST); cohesive, w>PL, very stiff to firm		0.10							
1					1	SS	5				
					2	SS	WH				
2								⊕ +			
				88.47				⊕ +			
		(CI/CH) SILTY CLAY to CLAY; grey with black organic mottling; cohesive, w>PL, firm		2.74							
3					3	SS	WH				
4								⊕ +			
								⊕ +			
5					4	SS	WH				
								⊕ +			
								⊕ +			
6					5	TP	PH				
7								⊕ +			
								⊕ +			
				83.59				⊕ +			
		End of Borehole		7.62							
8											
9											
10											

DEPTH SCALE

1 : 50

Golder Associates

LOGGED: DG

CHECKED: SD

MIS-BHS 001 1771847.GPJ GAL-MIS.GDT 09/12/17 JEM

PROJECT: 1771847

RECORD OF BOREHOLE: 17-05

SHEET 1 OF 1

LOCATION: N 5012743.9 ;E 361739.5

BORING DATE: February 1, 2017

DATUM: CGVD28

SAMPLER HAMMER, 64kg; DROP, 760mm

PENETRATION TEST HAMMER, 64kg; DROP, 760mm

DEPTH SCALE METRES	BORING METHOD	SOIL PROFILE DESCRIPTION	STRATA PLOT	ELEV. / DEPTH (m)	SAMPLES NUMBER	TYPE	BLOWS/0.30m	DYNAMIC PENETRATION RESISTANCE, BLOWS/0.3m (20 40 60 80) / SHEAR STRENGTH Cu, kPa (nat V. + Q - ●; rem V. ⊕ U - ○) (20 40 60 80)	HYDRAULIC CONDUCTIVITY, k, cm/s (10^{-6} 10^{-5} 10^{-4} 10^{-3}) / WATER CONTENT PERCENT (Wp ⊖ W Wl; 20 40 60 80)	ADDITIONAL LAB. TESTING	PIEZOMETER OR STANDPIPE INSTALLATION
		GROUND SURFACE		91.12							
0	Power Auger 200 mm Diam. (Hollow Stem)	TOPSOIL - (SM) SILTY SAND; dark brown; moist		0.00							
		(CL/CI/CH) SILTY CLAY to CLAY; grey brown, contains silt layers (WEATHERED CRUST); cohesive, w>PL, very stiff to stiff		0.10							Bentonite Seal
1					1	SS	3				
					2	SS	2				
2											Bentonite and Cuttings Mix
		(CI/CH) SILTY CLAY to CLAY; grey with black organic mottling; cohesive, w>PL, soft to firm		88.53 / 2.59	3	SS	1				
3					4	SS	WH				Bentonite Seal
											Silica Sand
4											
					5	TP	PH			C	Standpipe
5											Silica Sand
6					6	SS	WH				Native Backfill
7											
		End of Borehole		83.50 / 7.62							
8											W.L. in Standpipe at Elev. 89.90 m on February 21, 2017
9											
10											

DEPTH SCALE

1 : 50

Golder Associates

LOGGED: DG

CHECKED: SD

MIS-BHS 001 1771847.GPJ GAL-MIS.GDT 09/12/17 JEM

PROJECT: 1771847

RECORD OF BOREHOLE: 17-09

SHEET 1 OF 1

LOCATION: N 5012670.0 ;E 362072.9

BORING DATE: February 3, 2017

DATUM: CGVD28

SAMPLER HAMMER, 64kg; DROP, 760mm

PENETRATION TEST HAMMER, 64kg; DROP, 760mm

DEPTH SCALE METRES	BORING METHOD	SOIL PROFILE: DESCRIPTION	STRATA PLOT	ELEV. / DEPTH (m)	SAMPLES: NUMBER	TYPE	BLOWS/0.30m	ADDITIONAL LAB. TESTING	PIEZOMETER OR STANDPIPE INSTALLATION
		GROUND SURFACE		90.87					
0	Power Auger, 200 mm Diam. (Hollow Stem)	TOPSOIL - (SM) SILTY SAND; dark brown; moist		0.00					
		(CL/CI/CH) SILTY CLAY to CLAY; grey brown (WEATHERED CRUST); cohesive, w>PL, very stiff to stiff		0.13					Bentonite Seal
1					1	SS	1		
					2	SS	2		
2									Bentonite and Cuttings Mix
		(CI/CH) SILTY CLAY to CLAY; grey with black organic mottling; cohesive, w>PL, soft to firm		88.13 / 2.74					
3					3	SS	WH		
									Bentonite Seal
4									Silica Sand
					4	TP	PH		Standpipe
5									Silica Sand
6					5	SS	WH		Native Backfill
7				83.25					
		End of Borehole		7.62					W.L. in Standpipe at Elev. 90.06 m on February 21, 2017
8									
9									
10									

DYNAMIC PENETRATION RESISTANCE, BLOWS/0.3m: 20, 40, 60, 80

SHEAR STRENGTH Cu, kPa: nat V. + Q - ●; rem V. ⊕ U - ○; 20, 40, 60, 80

HYDRAULIC CONDUCTIVITY, k, cm/s: 10^{-6}, 10^{-5}, 10^{-4}, 10^{-3}

WATER CONTENT PERCENT: Wp ⊢—○W—⊣ Wl; 20, 40, 60, 80

DEPTH SCALE

1 : 50

Golder Associates

LOGGED: DG

CHECKED: SD

MIS-BHS 001 1771847.GPJ GAL-MIS.GDT 09/12/17 JEM

PROJECT: 1771847

RECORD OF BOREHOLE: 17-16

SHEET 1 OF 1

LOCATION: N 5012987.6 ;E 361366.8

BORING DATE: March 31, 2017

DATUM: CGVD28

SAMPLER HAMMER, 64kg; DROP, 760mm

PENETRATION TEST HAMMER, 64kg; DROP, 760mm

DEPTH SCALE METRES	BORING METHOD	SOIL PROFILE DESCRIPTION	STRATA PLOT	ELEV. DEPTH (m)	SAMPLES NUMBER	TYPE	BLOWS/0.30m	ADDITIONAL LAB. TESTING	PIEZOMETER OR STANDPIPE INSTALLATION
		GROUND SURFACE		91.27					
0	Power Auger, 200 mm Diam. (Hollow Stem)	TOPSOIL - (SM) SILTY SAND; brown, contains rootlets; moist		0.00					
		(CL/CI/CH) SILTY CLAY to CLAY; grey brown, contains silty sand layers (WEATHERED CRUST); cohesive, w>PL, very stiff to stiff		0.15	1	GRAB	-		Bentonite Seal
1					2	SS	4		
					3	SS	1		
2				88.83					
		(CI/CH) SILTY CLAY to CLAY; grey with black organic mottling; cohesive, w>PL, soft to firm		2.44					
3					4	SS	WH		Cuttings
4									
5					5	SS	WH		
6									Bentonite Seal
					6	SS	WH		Silica Sand
7									Standpipe
8					7	TP	PH	C	W.L. in Standpipe at Elev. 90.34 m on April 13, 2017
9				82.13					
		End of Borehole		9.14					
10									

DYNAMIC PENETRATION RESISTANCE, BLOWS/0.3m: 20, 40, 60, 80

SHEAR STRENGTH Cu, kPa: nat V. + Q - ●; rem V. ⊕ U - ○; 20, 40, 60, 80

HYDRAULIC CONDUCTIVITY, k, cm/s: 10^{-6}, 10^{-5}, 10^{-4}, 10^{-3}

WATER CONTENT PERCENT: Wp ⊢—○ W —⊣ Wl; 20, 40, 60, 80

DEPTH SCALE

1 : 50

Golder Associates

LOGGED: SN

CHECKED: SD

MIS-BHS 001 1771847.GPJ GAL-MIS.GDT 09/12/17 JEM

PROJECT: 1771847

RECORD OF BOREHOLE: 17-17

SHEET 1 OF 1

LOCATION: N 5013210.1 ;E 361450.6

BORING DATE: March 23 & 24, 2017

DATUM: CGVD28

SAMPLER HAMMER, 64kg; DROP, 760mm

PENETRATION TEST HAMMER, 64kg; DROP, 760mm

DEPTH SCALE METRES	BORING METHOD	SOIL PROFILE: DESCRIPTION	STRATA PLOT	ELEV. / DEPTH (m)	SAMPLES: NUMBER	TYPE	BLOWS/0.30m	ADDITIONAL LAB. TESTING
		GROUND SURFACE		91.82				
0	Power Auger, 200 mm Diam. (Hollow Stem)	TOPSOIL - (ML) sandy SILT; dark brown; moist		0.00				
		(CL/CI/CH) SILTY CLAY to CLAY; grey brown, contains sandy silt layers (WEATHERED CRUST); cohesive, w>PL, very stiff to stiff		0.09				
1					1	SS	4	
					2	SS	3	
2				89.08				
		(CI/CH) SILTY CLAY to CLAY; grey with black organic mottling, contains silt seams; cohesive, w>PL, soft to firm		2.74				
3					3	SS	1	
4					4	TP	PH	C
5								
6					5	SS	WH	
7								
8					6	SS	WH	
9				82.68				
		End of Borehole		9.14				
10								

DYNAMIC PENETRATION RESISTANCE, BLOWS/0.3m: 20, 40, 60, 80

SHEAR STRENGTH Cu, kPa: nat V. + Q - ●; rem V. ⊕ U - ○; 20, 40, 60, 80

HYDRAULIC CONDUCTIVITY, k, cm/s: 10^{-6}, 10^{-5}, 10^{-4}, 10^{-3}

WATER CONTENT PERCENT: Wp ⊢—○ W —⊣ Wl; 20, 40, 60, 80

PIEZOMETER OR STANDPIPE INSTALLATION

DEPTH SCALE

1 : 50

Golder Associates

LOGGED: KM

CHECKED: SD

MIS-BHS 001 1771847.GPJ GAL-MIS.GDT 09/12/17 JEM

PROJECT: 1771847

RECORD OF BOREHOLE: 17-17A

SHEET 1 OF 1

LOCATION: Adjacent to BH 17-17

BORING DATE: March 24, 2017

DATUM: CGVD28

SAMPLER HAMMER, 64kg; DROP, 760mm

PENETRATION TEST HAMMER, 64kg; DROP, 760mm

DEPTH SCALE METRES	BORING METHOD	SOIL PROFILE: DESCRIPTION	STRATA PLOT	ELEV. / DEPTH (m)	SAMPLES: NUMBER	TYPE	BLOWS/0.30m	DYNAMIC PENETRATION RESISTANCE, BLOWS/0.3m (20 40 60 80) / SHEAR STRENGTH Cu, kPa (nat V. + Q - ●, rem V. ⊕ U - ○) (20 40 60 80)	HYDRAULIC CONDUCTIVITY, k, cm/s (10^{-6} 10^{-5} 10^{-4} 10^{-3}) / WATER CONTENT PERCENT (Wp ⊖W WI) (20 40 60 80)	ADDITIONAL LAB. TESTING	PIEZOMETER OR STANDPIPE INSTALLATION
		GROUND SURFACE		91.82							
0	Power Auger, 200 mm Diam. (Hollow Stem)	Refer to Borehole 17-17 for Stratigraphy		0.00							Bentonite Seal
1											Silica Sand
2											51 mm Diam. PVC #10 Slot Screen
3				88.77							Silica Sand
		End of Borehole		3.05							WL in Screen at Elev. 91.21 m on March 31, 2017
4											
5											
6											
7											
8											
9											
10											

DEPTH SCALE

1 : 50

Golder Associates

LOGGED: KM

CHECKED: SD

PROJECT: 1771847

RECORD OF BOREHOLE: 17-18

SHEET 1 OF 1

LOCATION: N 5013064.6 ;E 361497.9

BORING DATE: March 23, 2017

DATUM: CGVD28

SAMPLER HAMMER, 64kg; DROP, 760mm

PENETRATION TEST HAMMER, 64kg; DROP, 760mm

DEPTH SCALE METRES	BORING METHOD	SOIL PROFILE: DESCRIPTION	STRATA PLOT	ELEV. / DEPTH (m)	SAMPLES: NUMBER	TYPE	BLOWS/0.30m	DYNAMIC PENETRATION RESISTANCE, BLOWS/0.3m (20 40 60 80) / SHEAR STRENGTH Cu, kPa (nat V. + Q - ●; rem V. ⊕ U - ○) (20 40 60 80)	HYDRAULIC CONDUCTIVITY, k, cm/s (10^{-6} 10^{-5} 10^{-4} 10^{-3}) / WATER CONTENT PERCENT (Wp ⊖W Wl; 20 40 60 80)	ADDITIONAL LAB. TESTING	PIEZOMETER OR STANDPIPE INSTALLATION
		GROUND SURFACE		91.40							
0	Power Auger, 200 mm Diam. (Hollow Stem)	TOPSOIL - (ML) sandy SILT; dark brown; moist		0.00							
		(CL/CI/CH) SILTY CLAY to CLAY; grey brown, contains sandy silt layers (WEATHERED CRUST); cohesive, w>PL, very stiff to firm		0.10							
1					1	SS	6				
					2	SS	WH				
2								⊕ +			
		(CI/CH) SILTY CLAY to CLAY; grey, contains silt seams; cohesive, w>PL, soft to firm		88.66 / 2.74				⊕ +			
3					3	SS	WH				
4								⊕ + ⊕ +			
					4	SS	WH				
5								⊕ + ⊕ +			
6					5	SS	WH				
7								⊕ + ⊕ +			
		End of Borehole		83.78 / 7.62				⊕ +			
8											
9											
10											

DEPTH SCALE

1 : 50

Golder Associates

LOGGED: KM/SM

CHECKED: SD

PROJECT: 1771847

RECORD OF BOREHOLE: 17-18A

SHEET 1 OF 1

LOCATION: Adjacent to BH 17-18

BORING DATE: March 23, 2017

DATUM: CGVD28

SAMPLER HAMMER, 64kg; DROP, 760mm

PENETRATION TEST HAMMER, 64kg; DROP, 760mm

DEPTH SCALE METRES	BORING METHOD	SOIL PROFILE: DESCRIPTION	STRATA PLOT	ELEV. / DEPTH (m)	SAMPLES: NUMBER	TYPE	BLOWS/0.30m	DYNAMIC PENETRATION RESISTANCE, BLOWS/0.3m (20 40 60 80) / SHEAR STRENGTH Cu, kPa (nat V. + Q - ●, rem V. ⊕ U - ○) (20 40 60 80)	HYDRAULIC CONDUCTIVITY, k, cm/s (10^{-6} 10^{-5} 10^{-4} 10^{-3}) / WATER CONTENT PERCENT (Wp ⊖W WI) (20 40 60 80)	ADDITIONAL LAB. TESTING	PIEZOMETER OR STANDPIPE INSTALLATION
		GROUND SURFACE		91.40							
0	Power Auger, 200 mm Diam. (Hollow Stem)	Refer to Borehole 17-18 for Stratigraphy		0.00							Bentonite Seal
1											Silica Sand
2											51 mm Diam. PVC #10 Slot Screen
3				88.35							Silica Sand
		End of Borehole		3.05							WL in Screen at Elev. 90.95 m on March 31, 2017
4											
5											
6											
7											
8											
9											
10											

DEPTH SCALE

1 : 50

Golder Associates

LOGGED: KM/SM

CHECKED: SD

PROJECT: 1771847

RECORD OF BOREHOLE: 17-19

SHEET 1 OF 1

LOCATION: N 5012932.6 ;E 361556.3

BORING DATE: March 30, 2017

DATUM: CGVD28

SAMPLER HAMMER, 64kg; DROP, 760mm

PENETRATION TEST HAMMER, 64kg; DROP, 760mm

DEPTH SCALE METRES	BORING METHOD	SOIL PROFILE: DESCRIPTION	STRATA PLOT	ELEV. / DEPTH (m)	SAMPLES: NUMBER	TYPE	BLOWS/0.30m	ADDITIONAL LAB. TESTING	PIEZOMETER OR STANDPIPE INSTALLATION
		GROUND SURFACE		91.24					
0	Power Auger, 200 mm Diam. (Hollow Stem)	TOPSOIL - (SM) SILTY SAND; dark brown; moist		0.00					
		(CL/CI/CH) SILTY CLAY to CLAY; brown, contains sandy silt layers (WEATHERED CRUST); cohesive, w>PL, very stiff to firm		0.15					
1					1	SS	2		
					2	SS	WH		
2									
		(CI/CH) SILTY CLAY to CLAY; grey with black organic mottling; cohesive, w>PL, soft to firm		88.50 / 2.74					Cuttings
3					3	SS	WH		
4									
					4	TP	PH	C	
5									
6									Bentonite Seal
					5	SS	WH		
									Silica Sand
7									Standpipe
8					6	SS	WH		
									Cuttings
9				82.10					
		End of Borehole		9.14					W.L. in Standpipe at Elev. 89.89 m on April 13, 2017
10									

DYNAMIC PENETRATION RESISTANCE, BLOWS/0.3m: 20, 40, 60, 80

SHEAR STRENGTH Cu, kPa: nat V. + Q - ●; rem V. ⊕ U - ○; 20, 40, 60, 80

HYDRAULIC CONDUCTIVITY, k, cm/s: 10^{-6}, 10^{-5}, 10^{-4}, 10^{-3}

WATER CONTENT PERCENT: Wp ⊢—○W—⊣ Wl; 20, 40, 60, 80

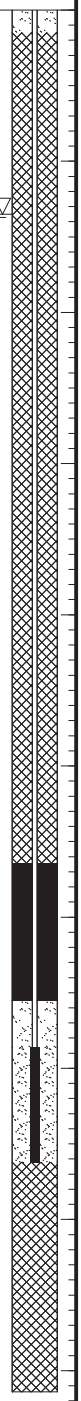

DEPTH SCALE

1 : 50

Golder Associates

LOGGED: SM

CHECKED: SD

MIS-BHS 001 1771847.GPJ GAL-MIS.GDT 09/12/17 JEM

PROJECT: 1771847

RECORD OF BOREHOLE: 17-20

SHEET 1 OF 1

LOCATION: N 5012801.4 ;E 361573.1

BORING DATE: March 20, 2017

DATUM: CGVD28

SAMPLER HAMMER, 64kg; DROP, 760mm

PENETRATION TEST HAMMER, 64kg; DROP, 760mm

DEPTH SCALE METRES	BORING METHOD	SOIL PROFILE: DESCRIPTION	STRATA PLOT	ELEV. / DEPTH (m)	SAMPLES: NUMBER	TYPE	BLOWS/0.30m	DYNAMIC PENETRATION RESISTANCE, BLOWS/0.3m (20 40 60 80) / SHEAR STRENGTH Cu, kPa (nat V. + Q - ●; rem V. ⊕ U - ○) (20 40 60 80)	HYDRAULIC CONDUCTIVITY, k, cm/s (10^{-6} 10^{-5} 10^{-4} 10^{-3}) / WATER CONTENT PERCENT (Wp ⊢—○ W —⊣ Wl) (20 40 60 80)	ADDITIONAL LAB. TESTING	PIEZOMETER OR STANDPIPE INSTALLATION
		GROUND SURFACE		91.03							
0	Power Auger, 200 mm Diam. (Hollow Stem)	TOPSOIL - (ML) sandy SILT; dark brown; moist		0.00							
		(CL/CI/CH) SILTY CLAY to CLAY; grey brown, contains sandy silt layers (WEATHERED CRUST); cohesive, w>PL, very stiff to stiff		0.10							
1					1	SS	4				
					2	SS	WH				
2				88.74							
		(CI/CH) SILTY CLAY to CLAY; grey with black organic mottling, contains sandy silt seams; cohesive, w>PL, soft to firm		2.29							
3					3	SS	WH				
4					4	SS	WH				
5											
6					5	SS	WH				
7				83.41							
		End of Borehole		7.62							
8											
9											
10											

DEPTH SCALE

1 : 50

Golder Associates

LOGGED: KM

CHECKED: SD

MIS-BHS 001 1771847.GPJ GAL-MIS.GDT 09/12/17 JEM

PROJECT: 1771847

RECORD OF BOREHOLE: 17-20A

SHEET 1 OF 1

LOCATION: Adjacent to BH 17-20

BORING DATE: March 20, 2017

DATUM: CGVD28

SAMPLER HAMMER, 64kg; DROP, 760mm

PENETRATION TEST HAMMER, 64kg; DROP, 760mm

DEPTH SCALE METRES	BORING METHOD	SOIL PROFILE: DESCRIPTION	STRATA PLOT	ELEV. / DEPTH (m)	SAMPLES: NUMBER	TYPE	BLOWS/0.30m	DYNAMIC PENETRATION RESISTANCE, BLOWS/0.3m (20 40 60 80) / SHEAR STRENGTH Cu, kPa (nat V. + Q - ●, rem V. ⊕ U - ○) (20 40 60 80)	HYDRAULIC CONDUCTIVITY, k, cm/s (10^{-6} 10^{-5} 10^{-4} 10^{-3}) / WATER CONTENT PERCENT (Wp ⊖W WI) (20 40 60 80)	ADDITIONAL LAB. TESTING	PIEZOMETER OR STANDPIPE INSTALLATION
		GROUND SURFACE		91.03							
0	Power Auger, 200 mm Diam. (Hollow Stem)	Refer to Borehole 17-20 for Stratigraphy		0.00							Bentonite Seal; Silica Sand; 51 mm Diam. PVC #10 Slot Screen; Silica Sand
1											
2											
3				87.98							
		End of Borehole		3.05							WL in Screen at Elev. 90.37 m on March 31, 2017
4											
5											
6											
7											
8											
9											
10											

DEPTH SCALE

1 : 50

Golder Associates

LOGGED: KM

CHECKED: SD

PROJECT: 1771847

RECORD OF BOREHOLE: 17-21

SHEET 1 OF 1

LOCATION: N 5012670.3 ;E 361616.6

BORING DATE: March 29, 2017

DATUM: CGVD28

SAMPLER HAMMER, 64kg; DROP, 760mm

PENETRATION TEST HAMMER, 64kg; DROP, 760mm

DEPTH SCALE METRES	BORING METHOD	SOIL PROFILE: DESCRIPTION	STRATA PLOT	ELEV. / DEPTH (m)	SAMPLES: NUMBER	TYPE	BLOWS/0.30m	DYNAMIC PENETRATION RESISTANCE, BLOWS/0.3m (20 40 60 80) / SHEAR STRENGTH Cu, kPa (nat V. + Q - ●; rem V. ⊕ U - ○) (20 40 60 80)	HYDRAULIC CONDUCTIVITY, k, cm/s (10^{-6} 10^{-5} 10^{-4} 10^{-3}) / WATER CONTENT PERCENT (Wp ⊢—○W—⊣ Wl) (20 40 60 80)	ADDITIONAL LAB. TESTING	PIEZOMETER OR STANDPIPE INSTALLATION
		GROUND SURFACE		91.24							
0	Power Auger, 200 mm Diam. (Hollow Stem)	TOPSOIL - (ML) sandy SILT; dark brown; moist		0.00							
		(CL/CI/CH) SILTY CLAY to CLAY; grey brown, contains sandy silt layers (WEATHERED CRUST); cohesive, w>PL, very stiff to stiff		0.10							
1					1	SS	4				
					2	SS	WH				
2											
3				88.19							
		(CI/CH) SILTY CLAY to CLAY; grey with black organic mottling, contains silt seams; cohesive, w>PL, firm		3.05	3	SS	WH				
4											
					4	SS	WH				
5											
6					5	TP	PH			C	
7				83.62							
		End of Borehole		7.62							
8											
9											
10											

DEPTH SCALE

1 : 50

Golder Associates

LOGGED: KM

CHECKED: SD

MIS-BHS 001 1771847.GPJ GAL-MIS.GDT 09/12/17 JEM

PROJECT: 1771847

RECORD OF BOREHOLE: 17-22

SHEET 1 OF 1

LOCATION: N 5012555.0 ;E 361697.8

BORING DATE: March 29, 2017

DATUM: CGVD28

SAMPLER HAMMER, 64kg; DROP, 760mm

PENETRATION TEST HAMMER, 64kg; DROP, 760mm

DEPTH SCALE METRES	BORING METHOD	SOIL PROFILE DESCRIPTION	STRATA PLOT	ELEV. / DEPTH (m)	SAMPLES NUMBER	TYPE	BLOWS/0.30m	DYNAMIC PENETRATION RESISTANCE, BLOWS/0.3m (20 40 60 80) / SHEAR STRENGTH Cu, kPa (nat V. + Q - ●; rem V. ⊕ U - ○) (20 40 60 80)	HYDRAULIC CONDUCTIVITY, k, cm/s (10^{-6} 10^{-5} 10^{-4} 10^{-3}) / WATER CONTENT PERCENT (Wp — W — Wl; 20 40 60 80)	ADDITIONAL LAB. TESTING	PIEZOMETER OR STANDPIPE INSTALLATION
		GROUND SURFACE		91.36							
0	Power Auger, 200 mm Diam. (Hollow Stem)	TOPSOIL - (ML) sandy SILT; dark brown; moist		0.00							
		(CL/CI/CH) SILTY CLAY to CLAY; grey brown, contains silty sand layers (WEATHERED CRUST); cohesive, w>PL, very stiff to stiff		0.09							
1					1	SS	2				
					2	SS	2				
2											
											Cuttings
3		(CI/CH) SILTY CLAY to CLAY; grey with black organic mottling, contains silt seams; cohesive, w>PL, firm		88.31 / 3.05	3	SS	WH				
4											
					4	SS	WH				
5											
6											Bentonite Seal
					5	SS	WH				
											Silica Sand
7											Standpipe
					6	TP	PH				
8											Cuttings
9				82.22							
		End of Borehole		9.14							W.L. in Standpipe at Elev. 90.99 m on April 13, 2017
10											

DEPTH SCALE

1 : 50

Golder Associates

LOGGED: KM

CHECKED: SD

MIS-BHS 001 1771847.GPJ GAL-MIS.GDT 09/12/17 JEM

PROJECT: 1771847

RECORD OF BOREHOLE: 17-23

SHEET 1 OF 1

LOCATION: N 5013132.3 ;E 361640.7

BORING DATE: March 30, 2017

DATUM: CGVD28

SAMPLER HAMMER, 64kg; DROP, 760mm

PENETRATION TEST HAMMER, 64kg; DROP, 760mm

DEPTH SCALE METRES	BORING METHOD	SOIL PROFILE: DESCRIPTION	STRATA PLOT	ELEV. / DEPTH (m)	SAMPLES: NUMBER	TYPE	BLOWS/0.30m	DYNAMIC PENETRATION RESISTANCE, BLOWS/0.3m (20 40 60 80) / SHEAR STRENGTH Cu, kPa (nat V. + Q - ●; rem V. ⊕ U - ○) (20 40 60 80)	HYDRAULIC CONDUCTIVITY, k, cm/s (10^{-6} 10^{-5} 10^{-4} 10^{-3}) / WATER CONTENT PERCENT (Wp ⊢—○W—⊣ Wl) (20 40 60 80)	ADDITIONAL LAB. TESTING	PIEZOMETER OR STANDPIPE INSTALLATION
		GROUND SURFACE		91.41							
0	Power Auger, 200 mm Diam. (Hollow Stem)	TOPSOIL - (ML) sandy SILT; dark brown; moist		0.00 / 91.23							
		(CL/CI/CH) SILTY CLAY to CLAY; grey brown, contains silt seams (WEATHERED CRUST); cohesive, w>PL, very stiff to stiff		0.18							
1					1	SS	9				
2					2	SS	1				
		(CI/CH) SILTY CLAY to CLAY; grey with black organic mottling; cohesive, w>PL, firm		88.67 / 2.74							Cuttings
3					3	SS	WH				
4					4	SS	WH				
5											
6					5	SS	WH				Bentonite Seal
											Silica Sand
7											Standpipe
8					6	SS	WH				Cuttings
9				82.27							
		End of Borehole		9.14							W.L. in Standpipe at Elev. 91.36 m on April 13, 2017
10											

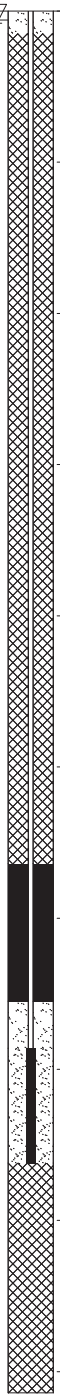

DEPTH SCALE

1 : 50

Golder Associates

LOGGED: SM

CHECKED: SD

MIS-BHS 001 1771847.GPJ GAL-MIS.GDT 09/12/17 JEM

PROJECT: 1771847

RECORD OF BOREHOLE: 17-24

SHEET 1 OF 1

LOCATION: N 5012870.0 ;E 361739.6

BORING DATE: March 29, 2017

DATUM: CGVD28

SAMPLER HAMMER, 64kg; DROP, 760mm

PENETRATION TEST HAMMER, 64kg; DROP, 760mm

DEPTH SCALE METRES	BORING METHOD	SOIL PROFILE: DESCRIPTION	STRATA PLOT	ELEV. / DEPTH (m)	SAMPLES: NUMBER	TYPE	BLOWS/0.30m	DYNAMIC PENETRATION RESISTANCE, BLOWS/0.3m (20 40 60 80) / SHEAR STRENGTH Cu, kPa (nat V. + Q - ●; rem V. ⊕ U - ○) (20 40 60 80)	HYDRAULIC CONDUCTIVITY, k, cm/s (10^{-6} 10^{-5} 10^{-4} 10^{-3}) / WATER CONTENT PERCENT (Wp ⊢—○W—⊣ Wl) (20 40 60 80)	ADDITIONAL LAB. TESTING	PIEZOMETER OR STANDPIPE INSTALLATION
		GROUND SURFACE		90.90							
0	Power Auger, 200 mm Diam. (Hollow Stem)	TOPSOIL - (ML) sandy SILT; dark brown; moist		0.00							
		(CL/CI/CH) SILTY CLAY to CLAY; grey brown, contains sandy silt seams (WEATHERED CRUST); cohesive, w>PL, stiff to firm		0.11							
1					1	SS	2				
					2	SS	1				
2											
		(CI/CH) SILTY CLAY to CLAY; grey with black organic mottling, contains silt seams; cohesive, w>PL, soft to firm		88.16 / 2.74							Cuttings
3					3	SS	WH				
4											
					4	TP	PH				
5											
6											Bentonite Seal
					5	SS	WH				
											Silica Sand
7											Standpipe
8					6	SS	WH				
											Cuttings
9				81.76							
		End of Borehole		9.14							W.L. in Standpipe at Elev. 90.59 m on April 13, 2017
10											

DEPTH SCALE

1 : 50

Golder Associates

LOGGED: KM

CHECKED: SD

MIS-BHS 001 1771847.GPJ GAL-MIS.GDT 09/12/17 JEM

PROJECT: 1771847

RECORD OF BOREHOLE: 17-25

SHEET 1 OF 1

LOCATION: N 5012633.8 ;E 361839.8

BORING DATE: March 24, 2017

DATUM: CGVD28

SAMPLER HAMMER, 64kg; DROP, 760mm

PENETRATION TEST HAMMER, 64kg; DROP, 760mm

DEPTH SCALE METRES	BORING METHOD	SOIL PROFILE: DESCRIPTION	STRATA PLOT	ELEV. / DEPTH (m)	SAMPLES: NUMBER	TYPE	BLOWS/0.30m	DYNAMIC PENETRATION RESISTANCE, BLOWS/0.3m (20 40 60 80) / SHEAR STRENGTH Cu, kPa (nat V. + Q - ●; rem V. ⊕ U - ○) (20 40 60 80)	HYDRAULIC CONDUCTIVITY, k, cm/s (10^{-6} 10^{-5} 10^{-4} 10^{-3}) / WATER CONTENT PERCENT (Wp ⊖W Wl; 20 40 60 80)	ADDITIONAL LAB. TESTING	PIEZOMETER OR STANDPIPE INSTALLATION
		GROUND SURFACE		91.09							
0	Power Auger 200 mm Diam. (Hollow Stem)	TOPSOIL - (ML) sandy SILT; dark brown; moist		0.00 / 0.08							
		(CL/CI/CH) SILTY CLAY to CLAY; grey brown, contains sandy silt layers (WEATHERED CRUST); cohesive, w>PL, very stiff to stiff			1	SS	4				
1					2	SS	2				
2											
		(CI/CH) SILTY CLAY to CLAY; grey, contains silt seams; cohesive, w>PL, firm		88.19 / 2.90	3	SS	WH				
3											
4					4	SS	WH				
5											
6					5	SS	WH				
7											
		End of Borehole		83.47 / 7.62							
8											
9											
10											

DEPTH SCALE

1 : 50

Golder Associates

LOGGED: SM/KM

CHECKED: SD

MIS-BHS 001 1771847.GPJ GAL-MIS.GDT 09/12/17 JEM

PROJECT: 1771847

RECORD OF BOREHOLE: 17-25A

SHEET 1 OF 1

LOCATION: Adjacent to BH 17-25

BORING DATE: March 24, 2017

DATUM: CGVD28

SAMPLER HAMMER, 64kg; DROP, 760mm

PENETRATION TEST HAMMER, 64kg; DROP, 760mm

DEPTH SCALE METRES	BORING METHOD	SOIL PROFILE: DESCRIPTION	STRATA PLOT	ELEV. / DEPTH (m)	SAMPLES: NUMBER	TYPE	BLOWS/0.30m	DYNAMIC PENETRATION RESISTANCE, BLOWS/0.3m (20 40 60 80) / SHEAR STRENGTH Cu, kPa (nat V. + Q - ●, rem V. ⊕ U - ○) (20 40 60 80)	HYDRAULIC CONDUCTIVITY, k, cm/s (10^{-6} 10^{-5} 10^{-4} 10^{-3}) / WATER CONTENT PERCENT (Wp ⊖W WI) (20 40 60 80)	ADDITIONAL LAB. TESTING	PIEZOMETER OR STANDPIPE INSTALLATION
		GROUND SURFACE		91.09							
0	Power Auger, 200 mm Diam. (Hollow Stem)	Refer to Borehole 17-25 for Stratigraphy		0.00							Bentonite Seal
1											Silica Sand
2											51 mm Diam. PVC #10 Slot Screen
3				88.04							Silica Sand
		End of Borehole		3.05							WL in Screen at Elev. 91.08 m on March 31, 2017
4											
5											
6											
7											
8											
9											
10											

DEPTH SCALE

1 : 50

Golder Associates

LOGGED: SM/KM

CHECKED: SD

PROJECT: 1771847

RECORD OF BOREHOLE: 17-26

SHEET 1 OF 1

LOCATION: N 5013197.9 ;E 361757.1

BORING DATE: March 23, 2017

DATUM: CGVD28

SAMPLER HAMMER, 64kg; DROP, 760mm

PENETRATION TEST HAMMER, 64kg; DROP, 760mm

DEPTH SCALE METRES	BORING METHOD	SOIL PROFILE DESCRIPTION	STRATA PLOT	ELEV. / DEPTH (m)	SAMPLES NUMBER	TYPE	BLOWS/0.30m	ADDITIONAL LAB. TESTING	PIEZOMETER OR STANDPIPE INSTALLATION
		GROUND SURFACE		91.54					
0	Power Auger, 200 mm Diam. (Hollow Stem)	TOPSOIL - (ML) sandy SILT; dark brown; moist		0.00					
		(CL/CI/CH) SILTY CLAY to CLAY; grey brown, contains sandy silt seams (WEATHERED CRUST); cohesive, w>PL, very stiff to firm		0.09	1	SS	12		Bentonite Seal
1					2	SS	6		Silica Sand
					3	SS	1		
2									51 mm Diam. PVC #10 Slot Screen
		(CI/CH) SILTY CLAY to CLAY; grey, contains silt seams; cohesive, w>PL, firm		88.95 / 2.59					
3					4	SS	WH		Silica Sand
4				87.12					
		(SM) gravelly SILTY SAND; grey, contains cobbles and boulders (GLACIAL TILL); non-cohesive, wet, loose to compact		4.42	5	SS	7		Cuttings
5					6	SS	10		
6					7	SS	6		
		End of Borehole		84.99 / 6.55					WL in Screen at Elev. 91.28 m on March 31, 2017
7									
8									
9									
10									

DYNAMIC PENETRATION RESISTANCE, BLOWS/0.3m: 20, 40, 60, 80

SHEAR STRENGTH Cu, kPa: nat V. + Q - ●; rem V. ⊕ U - ○; 20, 40, 60, 80

HYDRAULIC CONDUCTIVITY, k, cm/s: 10^{-6}, 10^{-5}, 10^{-4}, 10^{-3}

WATER CONTENT PERCENT: Wp ⊖ W ⊖ Wl; 20, 40, 60, 80

DEPTH SCALE

1 : 50

Golder Associates

LOGGED: KM/SM

CHECKED: SD

MIS-BHS 001 1771847.GPJ GAL-MIS.GDT 09/12/17 JEM

PROJECT: 1771847

RECORD OF BOREHOLE: 17-27

SHEET 1 OF 1

LOCATION: N 5013051.5 ;E 361831.3

BORING DATE: March 28, 2017

DATUM: CGVD28

SAMPLER HAMMER, 64kg; DROP, 760mm

PENETRATION TEST HAMMER, 64kg; DROP, 760mm

DEPTH SCALE METRES	BORING METHOD	SOIL PROFILE: DESCRIPTION	STRATA PLOT	ELEV. / DEPTH (m)	SAMPLES: NUMBER	TYPE	BLOWS/0.30m	DYNAMIC PENETRATION RESISTANCE, BLOWS/0.3m (20 40 60 80)	SHEAR STRENGTH Cu, kPa (20 40 60 80) nat V. + Q - ● rem V. ⊕ U - ○	HYDRAULIC CONDUCTIVITY, k, cm/s (10^{-6} 10^{-5} 10^{-4} 10^{-3})	WATER CONTENT PERCENT (Wp ⊖ W WI; 20 40 60 80)	ADDITIONAL LAB. TESTING	PIEZOMETER OR STANDPIPE INSTALLATION
		GROUND SURFACE		91.21									
0	Power Auger, 200 mm Diam. (Hollow Stem)	TOPSOIL - (ML) sandy SILT; dark brown; moist		0.00 / 0.09									
		(CL/CI/CH) SILTY CLAY to CLAY; grey brown, contains sandy silt layers (WEATHERED CRUST); cohesive, w>PL, stiff to firm											
1					1	SS	2						
					2	SS	WH						
2													
		(CI/CH) SILTY CLAY to CLAY; grey with black organic mottling, contains silt seams; cohesive, w>PL, soft to firm		88.47 / 2.74									
3					3	SS	WH						
4													
5					4	SS	1						
6					5	TP	PH						
7													
8					6	SS	WH						
9				82.07 / 9.14									
		End of Borehole											
10													

DEPTH SCALE

1 : 50

Golder Associates

LOGGED: KM

CHECKED: SD

MIS-BHS 001 1771847.GPJ GAL-MIS.GDT 09/12/17 JEM

PROJECT: 1771847

RECORD OF BOREHOLE: 17-28

SHEET 1 OF 1

LOCATION: N 5012922.4 ;E 361888.7

BORING DATE: March 20, 2017

DATUM: CGVD28

SAMPLER HAMMER, 64kg; DROP, 760mm

PENETRATION TEST HAMMER, 64kg; DROP, 760mm

DEPTH SCALE METRES	BORING METHOD	SOIL PROFILE: DESCRIPTION	STRATA PLOT	ELEV. / DEPTH (m)	SAMPLES: NUMBER	TYPE	BLOWS/0.30m	DYNAMIC PENETRATION RESISTANCE, BLOWS/0.3m (20 40 60 80) / SHEAR STRENGTH Cu, kPa (nat V. + Q - ●; rem V. ⊕ U - ○) (20 40 60 80)	HYDRAULIC CONDUCTIVITY, k, cm/s (10^{-6} 10^{-5} 10^{-4} 10^{-3}) / WATER CONTENT PERCENT (Wp — W — Wl; 20 40 60 80)	ADDITIONAL LAB. TESTING	PIEZOMETER OR STANDPIPE INSTALLATION
		GROUND SURFACE		91.10							
0	Power Auger, 200 mm Diam. (Hollow Stem)	TOPSOIL - (ML) sandy SILT; dark brown; moist		0.00							
		(CL/CI/CH) SILTY CLAY to CLAY; grey brown, contains sandy silt layers (WEATHERED CRUST); cohesive, w>PL, very stiff to stiff		0.10	1	SS	13				
1					2	SS	5				
					3	SS	WH				
2								⊕ +			
		(CI/CH) SILTY CLAY to CLAY; grey with black organic mottling, contains silt seams; cohesive, w>PL, soft to firm		88.36 / 2.74				⊕ +			
3					4	SS	WH				
4								⊕ +			
								⊕ +			
5					5	SS	WH				
								⊕ +			
6								⊕ +			
					6	SS	WH				
7								⊕ +			
								⊕ +			
		End of Borehole		83.48 / 7.62				⊕ +			
8											
9											
10											

DEPTH SCALE

1 : 50

Golder Associates

LOGGED: KM

CHECKED: SD

MIS-BHS 001 1771847.GPJ GAL-MIS.GDT 09/12/17 JEM

PROJECT: 1771847

RECORD OF BOREHOLE: 17-28A

SHEET 1 OF 1

LOCATION: Adjacent to BH 17-28

BORING DATE: March 20, 2017

DATUM: CGVD28

SAMPLER HAMMER, 64kg; DROP, 760mm

PENETRATION TEST HAMMER, 64kg; DROP, 760mm

DEPTH SCALE METRES	BORING METHOD	SOIL PROFILE: DESCRIPTION	STRATA PLOT	ELEV. / DEPTH (m)	SAMPLES: NUMBER	TYPE	BLOWS/0.30m	DYNAMIC PENETRATION RESISTANCE, BLOWS/0.3m (20 40 60 80) / SHEAR STRENGTH Cu, kPa (nat V. + Q - ●, rem V. ⊕ U - ○) (20 40 60 80)	HYDRAULIC CONDUCTIVITY, k, cm/s (10^{-6} 10^{-5} 10^{-4} 10^{-3}) / WATER CONTENT PERCENT (Wp ⊖W WI) (20 40 60 80)	ADDITIONAL LAB. TESTING	PIEZOMETER OR STANDPIPE INSTALLATION
		GROUND SURFACE		91.10							
0	Power Auger, 200 mm Diam. (Hollow Stem)	Refer to Borehole 17-28 for Stratigraphy		0.00							Bentonite Seal
1											Silica Sand
2											51 mm Diam. PVC #10 Slot Screen
3				88.05							Silica Sand
		End of Borehole		3.05							WL in Screen at Elev. 90.78 m on March 31, 2017
4											
5											
6											
7											
8											
9											
10											

DEPTH SCALE

1 : 50

Golder Associates

LOGGED: KM

CHECKED: SD

PROJECT: 1771847

RECORD OF BOREHOLE: 17-29

SHEET 1 OF 1

LOCATION: N 5012811.0 ;E 361925.0

BORING DATE: March 28, 2017

DATUM: CGVD28

SAMPLER HAMMER, 64kg; DROP, 760mm

PENETRATION TEST HAMMER, 64kg; DROP, 760mm

DEPTH SCALE METRES	BORING METHOD	SOIL PROFILE: DESCRIPTION	STRATA PLOT	ELEV. / DEPTH (m)	SAMPLES: NUMBER	TYPE	BLOWS/0.30m	DYNAMIC PENETRATION RESISTANCE, BLOWS/0.3m (20 40 60 80) / SHEAR STRENGTH Cu, kPa (nat V. + Q - ●; rem V. ⊕ U - ○) (20 40 60 80)	HYDRAULIC CONDUCTIVITY, k, cm/s (10^{-6} 10^{-5} 10^{-4} 10^{-3}) / WATER CONTENT PERCENT (Wp ⊖W Wl; 20 40 60 80)	ADDITIONAL LAB. TESTING	PIEZOMETER OR STANDPIPE INSTALLATION
		GROUND SURFACE		92.08							
0	Power Auger, 200 mm Diam. (Hollow Stem)	TOPSOIL - (ML) sandy SILT; dark brown; moist		0.00 / 0.08							
		(CL/CI/CH) SILTY CLAY to CLAY; grey brown, contains sandy silt layers (WEATHERED CRUST); cohesive, w>PL, very stiff to stiff									
1					1	SS	3				
					2	SS	2				
2											
		(CI/CH) SILTY CLAY to CLAY; grey with black organic mottling, contains silt seams; cohesive, w>PL, soft to firm		89.34 / 2.74							
3					3	SS	WH				
4											
					4	SS	WH				
5											
6											
					5	SS	WH				
7											
		End of Borehole		84.46 / 7.62							
8											
9											
10											

DEPTH SCALE

1 : 50

Golder Associates

LOGGED: KM

CHECKED: SD

MIS-BHS 001 1771847.GPJ GAL-MIS.GDT 09/12/17 JEM

PROJECT: 1771847

RECORD OF BOREHOLE: 17-30

SHEET 1 OF 1

LOCATION: N 5012708.4 ;E 361971.8

BORING DATE: March 29, 2017

DATUM: CGVD28

SAMPLER HAMMER, 64kg; DROP, 760mm

PENETRATION TEST HAMMER, 64kg; DROP, 760mm

DEPTH SCALE METRES	BORING METHOD	SOIL PROFILE DESCRIPTION	STRATA PLOT	ELEV. DEPTH (m)	SAMPLES NUMBER	TYPE	BLOWS/0.30m	DYNAMIC PENETRATION RESISTANCE, BLOWS/0.3m (20 40 60 80) / SHEAR STRENGTH Cu, kPa (nat V. + Q - ●, rem V. ⊕ U - ○) (20 40 60 80)	HYDRAULIC CONDUCTIVITY, k, cm/s (10^{-6} 10^{-5} 10^{-4} 10^{-3}) / WATER CONTENT PERCENT (Wp ⊢—○W—⊣ Wl) (20 40 60 80)	ADDITIONAL LAB. TESTING	PIEZOMETER OR STANDPIPE INSTALLATION
		GROUND SURFACE		90.92							
0	Power Auger, 200 mm Diam. (Hollow Stem)	TOPSOIL - (ML) sandy SILT; dark brown; moist		0.00							
		(CL/CI/CH) SILTY CLAY to CLAY; grey brown, contains sandy silt layers (WEATHERED CRUST); cohesive, w>PL, very stiff to stiff		0.09							
1					1	SS	4				
					2	SS	3				
2											
				88.02							Cuttings
3		(CI/CH) SILTY CLAY to CLAY; grey with black organic mottling, contains silt seams; cohesive, w>PL, soft to firm		2.90	3	SS	WH				
4					4	SS	WH				
5											
6					5	SS	WH				Bentonite Seal
											Silica Sand
7											Standpipe
					6	SS	WH				
8											Cuttings
9				81.78							
		End of Borehole		9.14							W.L. in Standpipe at Elev. 90.46 m on April 13, 2017
10											

DEPTH SCALE

1 : 50

Golder Associates

LOGGED: KM

CHECKED: SD

PROJECT: 18108333-2000

RECORD OF BOREHOLE: 18-01

SHEET 1 OF 1

LOCATION: N 5012964.6 ;E 361071.4

BORING DATE: November 5, 2018

DATUM: CGVD28

SAMPLER HAMMER, 64kg; DROP, 760mm

PENETRATION TEST HAMMER, 64kg; DROP, 760mm

DEPTH SCALE METRES	BORING METHOD	SOIL PROFILE – DESCRIPTION	ELEV. / DEPTH (m)	SAMPLES NUMBER	TYPE	BLOWS/0.30m	ADDITIONAL LAB. TESTING	PIEZOMETER OR STANDPIPE INSTALLATION
		GROUND SURFACE	92.12					
0	Power Auger, 200 mm Diam. (Hollow Stem)	TOPSOIL - (CI/CH) SILTY CLAY, trace sand; dark brown	0.00 / 91.94					
		(CI/CH) SILTY CLAY to CLAY, trace sand; grey brown (WEATHERED CRUST); cohesive, w>PL, very stiff to stiff	0.18	1	SS	8		Bentonite Seal
1		(CI/CH) SILTY CLAY to CLAY; grey, contains silty sand seams; cohesive, w>PL, firm	91.05 / 1.07	2	SS	1		Silica Sand
		(ML) gravelly sandy SILT; grey (GLACIAL TILL); non-cohesive, wet, compact to loose	90.60 / 1.52	3	SS	10		
2		(SM) gravelly SILTY SAND; grey (GLACIAL TILL); non-cohesive, wet, compact to loose	89.99 / 2.13	4	SS	10		PVC #10 Slot Screen
3		(SW) SAND, trace gravel; non-cohesive, wet, dense	89.07 / 3.05					
		(SM) gravelly SILTY SAND; grey (GLACIAL TILL); non-cohesive, wet, dense to very dense	88.77 / 3.35	5	SS	33		
4				6	SS	31	MH	Cave
5				7	SS	34		
			86.56	8	SS	>50		
		End of Borehole	5.56					
6								WL in screen at Elev. 92.31 m on April 30, 2019
7								
8								
9								
10								

DYNAMIC PENETRATION RESISTANCE, BLOWS/0.3m: 20, 40, 60, 80

SHEAR STRENGTH Cu, kPa: nat V. + Q - ●; rem V. ⊕ U - ○; 20, 40, 60, 80

HYDRAULIC CONDUCTIVITY, k, cm/s: 10^{-8}, 10^{-6}, 10^{-4}, 10^{-2}

WATER CONTENT PERCENT: Wp ⊢—○W—⊣ Wl; 20, 40, 60, 80

DEPTH SCALE

1 : 50

GOLDER

LOGGED: RI

CHECKED:

PROJECT: 18108333-2000

RECORD OF BOREHOLE: 18-02

SHEET 1 OF 1

LOCATION: N 5013068.6 ;E 361173.1

BORING DATE: November 6, 2018

DATUM: CGVD28

SAMPLER HAMMER, 64kg; DROP, 760mm

PENETRATION TEST HAMMER, 64kg; DROP, 760mm

DEPTH SCALE METRES	BORING METHOD	SOIL PROFILE: DESCRIPTION	STRATA PLOT	ELEV. / DEPTH (m)	SAMPLES: NUMBER	TYPE	BLOWS/0.30m	DYNAMIC PENETRATION RESISTANCE, BLOWS/0.3m (20 40 60 80) / SHEAR STRENGTH Cu, kPa (nat V. + Q - ●; rem V. ⊕ U - ○) (20 40 60 80)	HYDRAULIC CONDUCTIVITY, k, cm/s (10^{-8} 10^{-6} 10^{-4} 10^{-2}) / WATER CONTENT PERCENT (Wp ⊢—○W—⊣ Wl) (20 40 60 80)	ADDITIONAL LAB. TESTING	PIEZOMETER OR STANDPIPE INSTALLATION
		GROUND SURFACE		91.65							
0	Power Auger, 200 mm Diam. (Hollow Stem)	TOPSOIL - (CI/CH) SILTY CLAY		0.00							
		(CI/CH) SILTY CLAY to CLAY to CLAY; brown (WEATHERED CRUST); cohesive, w>PL		0.15	1	SS	8				Native Backfill
1					2	SS	7				Bentonite Seal; Silica Sand
					3	SS	2		C	MH	
2				89.52							
		(CI/CH) SILTY CLAY to CLAY; grey; cohesive, w>PL, firm		2.13							38 mm Diam. PVC #10 Slot
3					4	SS	WH				
4											
5					5	ST	PM				Cave
6					6	SS	WH				
7				84.03							
		End of Borehole		7.62							
8											WL in screen at Elev. 91.19 m on April 30, 2019
9											
10											

DEPTH SCALE
1 : 50

GOLDER

LOGGED: RA
CHECKED:

PROJECT: 18108333-2000

RECORD OF BOREHOLE: 18-03

SHEET 1 OF 1

LOCATION: N 5012861.1 ;E 361112.0

BORING DATE: November 6, 2018

DATUM: CGVD28

SAMPLER HAMMER, 64kg; DROP, 760mm

PENETRATION TEST HAMMER, 64kg; DROP, 760mm

DEPTH SCALE METRES	BORING METHOD	SOIL PROFILE: DESCRIPTION	STRATA PLOT	ELEV. / DEPTH (m)	SAMPLES: NUMBER	TYPE	BLOWS/0.30m	ADDITIONAL LAB. TESTING	PIEZOMETER OR STANDPIPE INSTALLATION
		GROUND SURFACE		91.32					
0	Power Auger, 200 mm Diam. (Hollow Stem)	TOPSOIL - (CI/CH) SILTY CLAY to CLAY, trace to some sand		0.00					
		(CI/CH) SILTY CLAY to CLAY, trace sand; grey brown, contains silty sand seams (WEATHERED CRUST); cohesive, w>PL, very stiff to stiff		91.07 / 0.25	1	SS	5		Bentonite Seal
1					2	SS	2	MH	Silica Sand
					3	SS	4		
2				89.03					38 mm Diam. PVC #10 Slot Screen
		(CI/C) SILTY CLAY to CLAY; grey, contains silty sand seams; cohesive, w>PL, firm to soft		2.29	4	SS	WH		
3					5	TP	PH	C	Silica Sand
4									
				86.37	6	SS	3		
5		(SM) gravelly SILTY SAND; grey (GLACIAL TILL); non-cohesive, wet, very loose to loose		4.95					Cave
					7	SS	6		
6					8	SS	1		
7					9	SS	5		
				83.85					
		End of Borehole		7.47					
8									WL in screen at Elev. 91.09 m on April 30, 2019
9									
10									

DYNAMIC PENETRATION RESISTANCE, BLOWS/0.3m: 20, 40, 60, 80

SHEAR STRENGTH Cu, kPa: nat V. + Q - ●; rem V. ⊕ U - ○; 20, 40, 60, 80

HYDRAULIC CONDUCTIVITY, k, cm/s: 10^{-8}, 10^{-6}, 10^{-4}, 10^{-2}

WATER CONTENT PERCENT: Wp ⊢—○ W —⊣ Wl; 20, 40, 60, 80

DEPTH SCALE

1 : 50

GOLDER

LOGGED: RI

CHECKED:

PROJECT: 18108333-2000

RECORD OF BOREHOLE: 18-04

SHEET 1 OF 1

LOCATION: N 5012942.7 ;E 361222.8

BORING DATE: November 7, 2018

DATUM: CGVD28

SAMPLER HAMMER, 64kg; DROP, 760mm

PENETRATION TEST HAMMER, 64kg; DROP, 760mm

DEPTH SCALE METRES	BORING METHOD	SOIL PROFILE: DESCRIPTION	STRATA PLOT	ELEV. / DEPTH (m)	SAMPLES: NUMBER	TYPE	BLOWS/0.30m	ADDITIONAL LAB. TESTING	PIEZOMETER OR STANDPIPE INSTALLATION
		GROUND SURFACE		91.28					
0	Power Auger, 200 mm Diam. (Hollow Stem)	TOPSOIL - (CL/CI) SILTY CLAY; brown		0.00					Native Backfill
		(CI/CH) SILTY CLAY to CLAY; grey (WEATHERED CRUST); cohesive, w>PL, stiff to very stiff		0.15	1	SS	7		Bentonite Seal
1					2	SS	2		Silica Sand
					3	SS	1		
2				89.15					
		(CI/CH) SILTY CLAY to CLAY; grey; cohesive, w>PL, soft to firm		2.13					38 mm Diam. PVC #10 Slot Screen 'B'
3					4	SS	WH		
4									
5					5	SS	WH		Native Backfill
6					6	SS	WH		
7									Bentonite Seal
									Silica Sand
8					7	SS	WH		
									38 mm Diam. PVC #10 Slot Screen 'A'
9				82.14					
		End of Borehole		9.14					WL in screen 'A' at Elev. 91.22 m on April 30, 2019 WL in screen 'B' at Elev. 91.06 m on April 30, 2019
10									

DYNAMIC PENETRATION RESISTANCE, BLOWS/0.3m: 20, 40, 60, 80

SHEAR STRENGTH Cu, kPa: nat V. + Q - ●; rem V. ⊕ U - ○; 20, 40, 60, 80

HYDRAULIC CONDUCTIVITY, k, cm/s: 10^{-8}, 10^{-6}, 10^{-4}, 10^{-2}

WATER CONTENT PERCENT: Wp ⊢—○W—⊣ Wl; 20, 40, 60, 80

DEPTH SCALE

1 : 50

GOLDER

LOGGED: RA

CHECKED:

PROJECT: 18108333-2000

RECORD OF BOREHOLE: 18-05

SHEET 1 OF 1

LOCATION: N 5012741.6 ;E 361151.9

BORING DATE: November 7, 2018

DATUM: CGVD28

SAMPLER HAMMER, 64kg; DROP, 760mm

PENETRATION TEST HAMMER, 64kg; DROP, 760mm

DEPTH SCALE METRES	BORING METHOD	SOIL PROFILE: DESCRIPTION	STRATA PLOT	ELEV. / DEPTH (m)	SAMPLES: NUMBER	TYPE	BLOWS/0.30m	ADDITIONAL LAB. TESTING	PIEZOMETER OR STANDPIPE INSTALLATION
		GROUND SURFACE		91.29					
0	Power Auger, 200 mm Diam. (Hollow Stem)	TOPSOIL - (CI/CH) SILTY CLAY to CLAY, trace sand; dark brown		0.00 / 91.04					
		(SM/ML) SILTY SAND to sandy SILT; grey brown; non-cohesive, moist to wet, loose		0.25 / 90.38	1	SS	7		Bentonite Seal
1		(CI/CH) SILTY CLAY to CLAY, trace sand; grey brown (WEATHERED CRUST); cohesive, w>PL, very stiff to stiff		0.91 / 89.16	2	SS	3	MH	Silica Sand
					3	SS	WH		
2		(CI/CH) SILTY CLAY to CLAY; grey, contains silty sand seams; cohesive, w>PL, firm		2.13					38 mm Diam. PVC #10 Slot Screen
3					4	SS	PM		
4									
5					5	SS	PM		Cave
6					6	SS	PM		
7				83.67					
		End of Borehole		7.62					
8									WL in screen at Elev. 91.10 m on April 30, 2019
9									
10									

DYNAMIC PENETRATION RESISTANCE, BLOWS/0.3m: 20, 40, 60, 80

SHEAR STRENGTH Cu, kPa: nat V. + Q - ●; rem V. ⊕ U - ○; 20, 40, 60, 80

HYDRAULIC CONDUCTIVITY, k, cm/s: 10^{-8}, 10^{-6}, 10^{-4}, 10^{-2}

WATER CONTENT PERCENT: Wp ⊢—○W—⊣ Wl; 20, 40, 60, 80

DEPTH SCALE

1 : 50

GOLDER

LOGGED: RA

CHECKED:

PROJECT: 18108333-2000

RECORD OF BOREHOLE: 18-06

SHEET 1 OF 1

LOCATION: N 5012825.6 ;E 361270.4

BORING DATE: November 7, 2018

DATUM: CGVD28

SAMPLER HAMMER, 64kg; DROP, 760mm

PENETRATION TEST HAMMER, 64kg; DROP, 760mm

DEPTH SCALE METRES	BORING METHOD	SOIL PROFILE: DESCRIPTION	STRATA PLOT	ELEV. / DEPTH (m)	SAMPLES: NUMBER	TYPE	BLOWS/0.30m	DYNAMIC PENETRATION RESISTANCE, BLOWS/0.3m (20 40 60 80) / SHEAR STRENGTH Cu, kPa (nat V. + Q - ●; rem V. ⊕ U - ○) (20 40 60 80)	HYDRAULIC CONDUCTIVITY, k, cm/s (10^{-8} 10^{-6} 10^{-4} 10^{-2}) / WATER CONTENT PERCENT (Wp ⊖W Wl; 20 40 60 80)	ADDITIONAL LAB. TESTING	PIEZOMETER OR STANDPIPE INSTALLATION
		GROUND SURFACE		91.25							
0	Power Auger, 200 mm Diam. (Hollow Stem)	TOPSOIL - (CL/CU) SILTY CLAY; brown		0.00							Native Backfill
		(CI/CH) SILTY CLAY to CLAY; grey brown (WEATHERED CRUST); cohesive, w>PL, stiff to firm		0.15	1	SS	3				Bentonite Seal
1					2	SS	6				Silica Sand
2					3	SS	4				
		(CI/CH) SILTY CLAY to CLAY; grey; cohesive, w>PL, soft		88.96 / 2.29							38 mm Diam. PVC #10 Slot Screen
3					4	ST	PM				
					5	SS	WH				
4											
5					6	SS	WH				Cave
6											
7					7	SS	WH				
		End of Borehole		83.63 / 7.62							
8											WL in screen at Elev. 91.07 m on April 30, 2019
9											
10											

DEPTH SCALE

1 : 50

GOLDER

LOGGED: RA

CHECKED:

PROJECT: 18108333-2000

RECORD OF BOREHOLE: 18-07

SHEET 1 OF 1

LOCATION: N 5012600.1 ;E 361205.1

BORING DATE: November 7, 2018

DATUM: CGVD28

SAMPLER HAMMER, 64kg; DROP, 760mm

PENETRATION TEST HAMMER, 64kg; DROP, 760mm

DEPTH SCALE METRES	BORING METHOD	SOIL PROFILE: DESCRIPTION	STRATA PLOT	ELEV. / DEPTH (m)	SAMPLES: NUMBER	TYPE	BLOWS/0.30m	ADDITIONAL LAB. TESTING	PIEZOMETER OR STANDPIPE INSTALLATION
		GROUND SURFACE		91.43					
0	Power Auger, 200 mm Diam. (Hollow Stem)	TOPSOIL - (CI/CH) SILTY CLAY to CLAY, trace to some sand		0.00					
		(CI/CH) SILTY CLAY to CLAY, trace to some sand; grey brown, contain silty sand seams (WEATHERED CRUST); cohesive, w>PL, very stiff to stiff		91.13 / 0.30	1	SS	5		Bentonite Seal
1					2	SS	2		Silica Sand
					3	SS	WH		
2									38 mm Diam. PVC #10 Slot Screen 'B'
3		(CI/CH) SILTY CLAY to CLAY; grey, contains silty sand seams; cohesive, w>PL, firm		88.38 / 3.05	4	SS	WH		
4									
5					5	TP	PM	C	Native Backfill
6					6	SS	PM		
7									Bentonite Seal
				83.81					Silica Sand
		(SM) gravelly SILTY SAND: grey (GLACIAL TILL); non-cohesive, wet, compact to loose		7.62	7	SS	11		
8					8	SS	5		38 mm Diam. PVC #10 Slot Screen 'A'
9				82.28					
		End of Borehole		9.15					WL in screen 'A' at Elev. 90.92 m on April 30, 2019 WL in screen 'B' at Elev. 91.18 m on April 30, 2019
10									

DYNAMIC PENETRATION RESISTANCE, BLOWS/0.3m: 20, 40, 60, 80

SHEAR STRENGTH Cu, kPa: nat V. + Q - ●; rem V. ⊕ U - ○; 20, 40, 60, 80

HYDRAULIC CONDUCTIVITY, k, cm/s: 10^{-8}, 10^{-6}, 10^{-4}, 10^{-2}

WATER CONTENT PERCENT: Wp ⊢—○W—⊣ Wl; 20, 40, 60, 80

DEPTH SCALE

1 : 50

GOLDER

LOGGED: RI

CHECKED:

PROJECT: 18108333-2000

RECORD OF BOREHOLE: 18-08

SHEET 1 OF 1

LOCATION: N 5012701.2 ;E 361309.6

BORING DATE: November 8, 2018

DATUM: CGVD28

SAMPLER HAMMER, 64kg; DROP, 760mm

PENETRATION TEST HAMMER, 64kg; DROP, 760mm

DEPTH SCALE METRES	BORING METHOD	SOIL PROFILE: DESCRIPTION	STRATA PLOT	ELEV. / DEPTH (m)	SAMPLES: NUMBER	TYPE	BLOWS/0.30m	ADDITIONAL LAB. TESTING	PIEZOMETER OR STANDPIPE INSTALLATION
		GROUND SURFACE		91.48					
0	Power Auger, 200 mm Diam. (Hollow Stem)	TOPSOIL - (CI/CH) SILTY CLAY to CLAY, some sand; dark brown		0.00					
		(CI/CH) SILTY CLAY to CLAY, trace to some sand; grey brown, contains silty sand seams (WEATHERED CRUST); cohesive, w>PL, very stiff to stiff		91.12 / 0.36	1	SS	3		Bentonite Seal
1					2	SS	2		Silica Sand
					3	SS	2		
2		(CI/CH) SILTY CLAY to CLAY, trace sand; grey, contains silty sand seams; cohesive, w>PL, firm		89.35 / 2.13					38 mm Diam. PVC #10 Slot Screen
3					4	SS	WH		Silica Sand
4									
5					5	SS	PM		Cave
		(SM) gravelly SILTY SAND; grey (GLACIAL TILL); non-cohesive, wet, very loose to loose		85.99 / 5.49					
6					6	SS	2		
7					7	SS	9		
		End of Borehole		84.01 / 7.47					
8									WL in screen at Elev. 91.16 m on April 30, 2019
9									
10									

DYNAMIC PENETRATION RESISTANCE, BLOWS/0.3m: 20, 40, 60, 80

SHEAR STRENGTH Cu, kPa: nat V. + Q - ●; rem V. ⊕ U - ○; 20, 40, 60, 80

HYDRAULIC CONDUCTIVITY, k, cm/s: 10^{-8}, 10^{-6}, 10^{-4}, 10^{-2}

WATER CONTENT PERCENT: Wp ⊢—○W—⊣ Wl; 20, 40, 60, 80

DEPTH SCALE

1 : 50

GOLDER

LOGGED: RI

CHECKED:

PROJECT: 18108333-2000

RECORD OF BOREHOLE: 18-09

SHEET 1 OF 1

LOCATION: N 5012730.1 ;E 361453.5

BORING DATE: November 8, 2018

DATUM: CGVD28

SAMPLER HAMMER, 64kg; DROP, 760mm

PENETRATION TEST HAMMER, 64kg; DROP, 760mm

DEPTH SCALE METRES	BORING METHOD	SOIL PROFILE: DESCRIPTION	STRATA PLOT	ELEV. / DEPTH (m)	SAMPLES: NUMBER	TYPE	BLOWS/0.30m	ADDITIONAL LAB. TESTING	PIEZOMETER OR STANDPIPE INSTALLATION
		GROUND SURFACE		91.12					
0	Power Auger, 200 mm Diam. (Hollow Stem)	TOPSOIL - (CL/CI) SILTY CLAY; brown		0.00 / 90.92					
		(CI/CH) SILTY CLAY to CLAY; grey brown (WEATHERED CRUST); cohesive, w>PL, very stiff to stiff		0.20	1	SS	8		Native Backfill
1					2	SS	4		Bentontie Seal
									Silica Sand
2					3	SS	1		
				88.69					38 mm Diam. PVC #10 Slot Screen
		(CI/CH) SILTY CLAY to CLAY; grey; cohesive, w>PL, soft to firm		2.43					
3					4	SS	WH		
4									
5					5	SS	WH		
									Cave
6					6	ST	PM		
7				83.50					
		End of Borehole		7.62					
8									WL in screen at Elev. 91.05 m on April 30, 2019
9									
10									

DYNAMIC PENETRATION RESISTANCE, BLOWS/0.3m: 20, 40, 60, 80

SHEAR STRENGTH Cu, kPa: nat V. + Q - ●; rem V. ⊕ U - ○; 20, 40, 60, 80

HYDRAULIC CONDUCTIVITY, k, cm/s: 10^{-8}, 10^{-6}, 10^{-4}, 10^{-2}

WATER CONTENT PERCENT: Wp ⊖ W ⊖ Wl; 20, 40, 60, 80

DEPTH SCALE

1 : 50

GOLDER

LOGGED: RA

CHECKED:

PROJECT: 18108333-2000

RECORD OF BOREHOLE: 18-10

SHEET 1 OF 1

LOCATION: N 5012493.1 ;E 361243.6

BORING DATE: November 7, 2018

DATUM: CGVD28

SAMPLER HAMMER, 64kg; DROP, 760mm

PENETRATION TEST HAMMER, 64kg; DROP, 760mm

DEPTH SCALE METRES	BORING METHOD	SOIL PROFILE: DESCRIPTION	STRATA PLOT	ELEV. / DEPTH (m)	SAMPLES: NUMBER	TYPE	BLOWS/0.30m	ADDITIONAL LAB. TESTING	PIEZOMETER OR STANDPIPE INSTALLATION
		GROUND SURFACE		91.24					
0	Power Auger, 200 mm Diam. (Hollow Stem)	TOPSOIL - (CI/CH) SILTY CLAY to CLAY, trace to some sand; dark brown		0.00					
		(CI/CH) SILTY CLAY to CLAY, trace to some sand; grey brown (WEATHERED CRUST); cohesive, w>PL, stiff to firm		91.01 / 0.23	1	SS	4		Bentonite Seal
1					2	SS	1		Silica Sand
					3	SS	WH		
2		(CI/CH) SILTY CLAY to CLAY; grey, contains silty sand seams; cohesive, w>PL, firm		89.11 / 2.13					38 mm Diam. PVC #10 Slot Screen
3					4	SS	PM		
4									
5					5	SS	PM		Cave
6					6	SS	PM		
7				83.62					
		End of Borehole		7.62					
8									WL in screen at Elev. 91.06 m on April 30, 2019
9									
10									

DYNAMIC PENETRATION RESISTANCE, BLOWS/0.3m: 20, 40, 60, 80

SHEAR STRENGTH Cu, kPa: nat V. + Q - ●; rem V. ⊕ U - ○; 20, 40, 60, 80

HYDRAULIC CONDUCTIVITY, k, cm/s: 10^{-8}, 10^{-6}, 10^{-4}, 10^{-2}

WATER CONTENT PERCENT: Wp ⊢—○ W —⊣ Wl; 20, 40, 60, 80

DEPTH SCALE

1 : 50

GOLDER

LOGGED: RI

CHECKED:

PROJECT: 18108333-2000

RECORD OF BOREHOLE: 18-11

SHEET 1 OF 1

LOCATION: N 5012581.7 ;E 361340.0

BORING DATE: November 8, 2018

DATUM: CGVD28

SAMPLER HAMMER, 64kg; DROP, 760mm

PENETRATION TEST HAMMER, 64kg; DROP, 760mm

DEPTH SCALE METRES	BORING METHOD	SOIL PROFILE: DESCRIPTION	STRATA PLOT	ELEV. / DEPTH (m)	SAMPLES: NUMBER	TYPE	BLOWS/0.30m	ADDITIONAL LAB. TESTING	PIEZOMETER OR STANDPIPE INSTALLATION
		GROUND SURFACE		91.26					
0	Power Auger, 200 mm Diam. (Hollow Stem)	TOPSOIL - (CI/CH) SILTY CLAY to CLAY, some sand; dark brown		0.00					
		(CI/CH) SILTY CLAY to CLAY, trace to some sand; grey brown, contains silty sand seams (WEATHERED CRUST); cohesive, w>PL, very stiff to stiff		90.96 / 0.30	1	SS	4		Bentonite Seal
1					2	SS	2	MH	Silica Sand
					3	SS	1		
2									38 mm Diam. PVC #10 Slot Screen
3		(CI/CH) SILTY CLAY to CLAY, trace sand; grey, contains silty sand seams; cohesive, w>PL, firm		88.21 / 3.05	4	SS	12		Silica Sand
		(CI/CH) SILTY CLAY to CLAY, some gravel; grey; cohesive, w>PL, firm		87.91 / 3.35					
		(CI/CH) SILTY CLAY to CLAY, trace sand; grey, contains silty sand seams; cohesive, w>PL, firm		87.60 / 3.66					
4					5	SS	WH		
5					6	SS	WH		Cave
6					7	SS	PM		
7				83.64					
		End of Borehole		7.62					
8									WL in screen at Elev. 91.21 m on April 30, 2019
9									
10									

DYNAMIC PENETRATION RESISTANCE, BLOWS/0.3m: 20, 40, 60, 80

SHEAR STRENGTH Cu, kPa: nat V. + Q - ●; rem V. ⊕ U - ○; 20, 40, 60, 80

HYDRAULIC CONDUCTIVITY, k, cm/s: 10^{-8}, 10^{-6}, 10^{-4}, 10^{-2}

WATER CONTENT PERCENT: Wp ⊢—○W—⊣ Wl; 20, 40, 60, 80

DEPTH SCALE

1 : 50

GOLDER

LOGGED: RI

CHECKED:

PROJECT: 18108333-2000

RECORD OF BOREHOLE: 18-12

SHEET 1 OF 1

LOCATION: N 5012613.5 ;E 361486.7

BORING DATE: November 8, 2018

DATUM: CGVD28

SAMPLER HAMMER, 64kg; DROP, 760mm

PENETRATION TEST HAMMER, 64kg; DROP, 760mm

DEPTH SCALE METRES	BORING METHOD	SOIL PROFILE: DESCRIPTION	STRATA PLOT	ELEV. / DEPTH (m)	SAMPLES: NUMBER	TYPE	BLOWS/0.30m	DYNAMIC PENETRATION RESISTANCE, BLOWS/0.3m (20 40 60 80)	SHEAR STRENGTH Cu, kPa (nat V. + Q - ●; rem V. ⊕ U - ○) (20 40 60 80)	HYDRAULIC CONDUCTIVITY, k, cm/s (10^{-8} 10^{-6} 10^{-4} 10^{-2})	WATER CONTENT PERCENT (Wp ⊢—○W—⊣ Wl) (20 40 60 80)	ADDITIONAL LAB. TESTING	PIEZOMETER OR STANDPIPE INSTALLATION
		GROUND SURFACE		91.14									
0	Power Auger, 200 mm Diam. (Hollow Stem)	TOPSOIL - (CL/CI) SILTY CLAY; brown		0.00 / 90.96									
		(CI/CH) SILTY CLAY to CLAY; grey brown (WEATHERED CRUST); cohesive, w>PL, very stiff to stiff		0.18	1	SS	8						Native Backfill
1					2	SS	4						Bentontie Seal; Silica Sand
					3	SS	3						
2													38 mm Diam. PVC #10 Slot Screen 'A'
3		(CI/CH) SILTY CLAY; grey; cohesive, w>PL< firm		88.09 / 3.05	4	SS	WH						
4													
5					5	SS	WH						Native Backfill
6					6	SS	WH						
7													Bentontie Seal; Silica Sand
8					7	SS	WH						38 mm Diam. PVC #10 Slot Screen 'B'
9		End of Borehole		82.00 / 9.14									WL in screen 'A' at Elev. 91.06 m on April 30, 2019; WL in screen 'B' at Elev. 91.10 m on April 30, 2019
10													

DEPTH SCALE

1 : 50

GOLDER

LOGGED: RA

CHECKED:

PROJECT: 18108333-2000

RECORD OF BOREHOLE: 18-13

SHEET 1 OF 1

LOCATION: N 5012467.9 ;E 361426.7

BORING DATE: November 8, 2018

DATUM: CGVD28

SAMPLER HAMMER, 64kg; DROP, 760mm

PENETRATION TEST HAMMER, 64kg; DROP, 760mm

DEPTH SCALE METRES	BORING METHOD	SOIL PROFILE: DESCRIPTION	STRATA PLOT	ELEV. / DEPTH (m)	SAMPLES: NUMBER	TYPE	BLOWS/0.30m	ADDITIONAL LAB. TESTING	PIEZOMETER OR STANDPIPE INSTALLATION
		GROUND SURFACE		91.07					
0	Power Auger, 200 mm Diam. (Hollow Stem)	TOPSOIL - (CI/CH) SILTY CLAY to CLAY, some sand; dark brown		0.00					
		(CI/CH) SILTY CLAY to CLAY, trace to some sand; grey brown, contains silty sand seams (WEATHERED CRUST); cohesive, w>PL, stiff		90.79 / 0.28	1	SS	3		Bentonite Seal
1					2	SS	3		Silica Sand
					3	SS	WH		
2		(CI/CH) SILTY CLAY to CLAY; grey, contains silty sand seams; cohesive, w>PL, firm		88.78 / 2.29					38 mm Diam. PVC #10 Slot Screen
3					4	TP	PM		
4									
5					5	SS	PM		Cave
6					6	SS	PM		
7				83.45					
		End of Borehole		7.62					
8									WL in screen at Elev. 90.57 m on April 30, 2019
9									
10									

DYNAMIC PENETRATION RESISTANCE, BLOWS/0.3m: 20, 40, 60, 80

SHEAR STRENGTH Cu, kPa: nat V. + Q - ●; rem V. ⊕ U - ○; 20, 40, 60, 80

HYDRAULIC CONDUCTIVITY, k, cm/s: 10^{-8}, 10^{-6}, 10^{-4}, 10^{-2}

WATER CONTENT PERCENT: Wp ⊢—○W—⊣ Wl; 20, 40, 60, 80

DEPTH SCALE

1 : 50

GOLDER

LOGGED: RI

CHECKED:

PROJECT: 18108333-2000

RECORD OF BOREHOLE: 18-14

SHEET 1 OF 1

LOCATION: N 5012533.4 ;E 361557.7

BORING DATE: November 9, 2018

DATUM: CGVD28

SAMPLER HAMMER, 64kg; DROP, 760mm

PENETRATION TEST HAMMER, 64kg; DROP, 760mm

DEPTH SCALE METRES	BORING METHOD	SOIL PROFILE: DESCRIPTION	STRATA PLOT	ELEV. / DEPTH (m)	SAMPLES: NUMBER	TYPE	BLOWS/0.30m	DYNAMIC PENETRATION RESISTANCE, BLOWS/0.3m (20 40 60 80)	SHEAR STRENGTH Cu, kPa (nat V. + Q - ●; rem V. ⊕ U - ○) (20 40 60 80)	HYDRAULIC CONDUCTIVITY, k, cm/s (10^{-8} 10^{-6} 10^{-4} 10^{-2})	WATER CONTENT PERCENT (Wp ⊢—○W—⊣ Wl) (20 40 60 80)	ADDITIONAL LAB. TESTING	PIEZOMETER OR STANDPIPE INSTALLATION
		GROUND SURFACE		91.38									
0	Power Auger, 200 mm Diam. (Hollow Stem)	TOPSOIL - (CL/CI) SILTY CLAY; dark brown		0.00									
		(CI/CH) SILTY CLAY to CLAY; brown (WEATHERED CRUST); cohesive, w>PL, very stiff to stiff		0.15	1	SS	6						Native Backfill
1					2	SS	3						Bentonite Seal; Silica Sand
2					3	SS	2					MH	38 mm Diam. PVC #10 Slot Screen
3		(CI/CH) SILTY CLAY to CLAY; grey; cohesive, w>PL, firm		88.33 / 3.05	4	SS	WH						
4													
5					5	SS	WH						Cave
6		(ML) gravelly sandy SILT; grey (GLACIAL TILL); non-cohesive, wet, very loose to compact		85.28 / 6.10	6	SS	WH					MH	
7					7	SS	11						
		End of Borehole		83.91 / 7.47									
8													WL in screen at Elev. 91.01 m on April 30, 2019
9													
10													

DEPTH SCALE

1 : 50

GOLDER

LOGGED: RA

CHECKED:

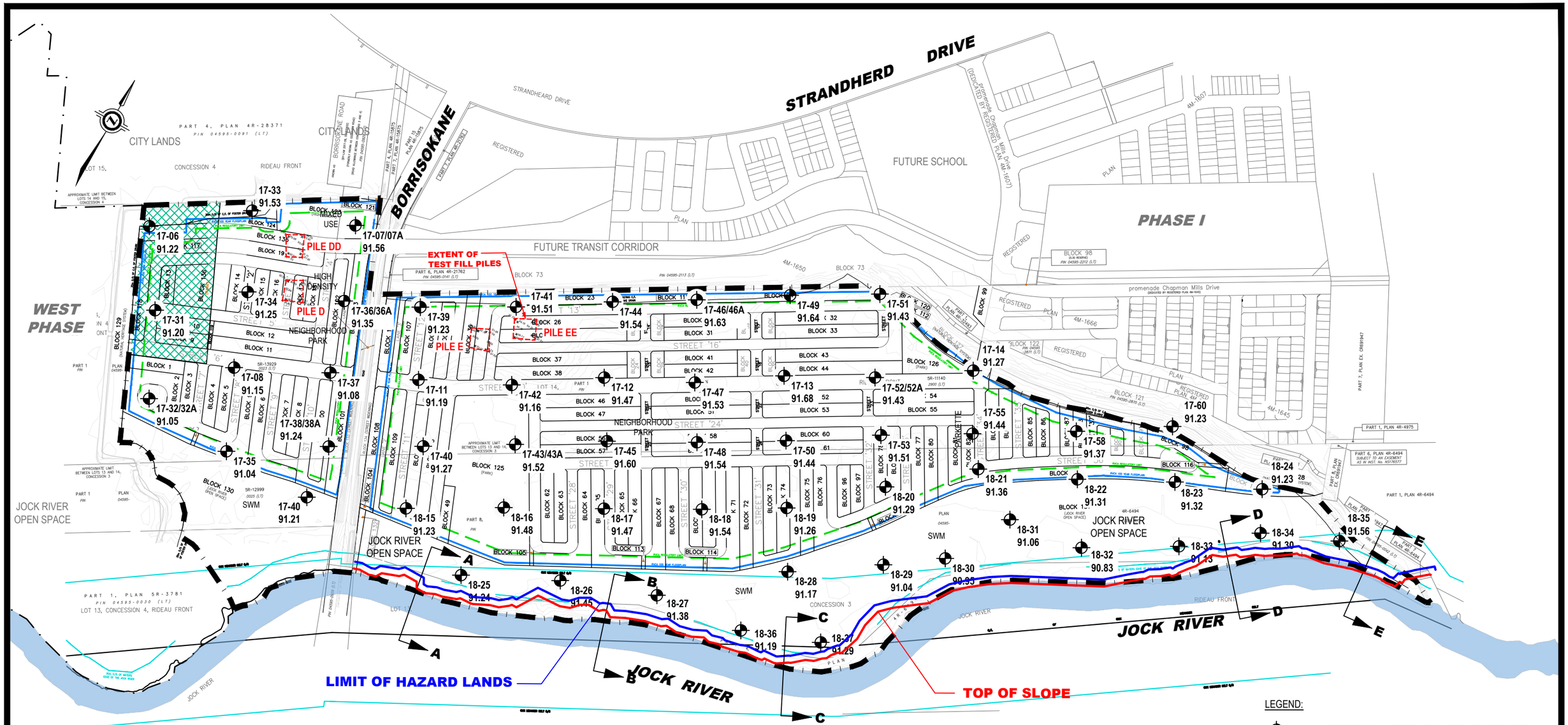

LEGEND:

- APPROXIMATE BOREHOLE LOCATION (GOLDER ASSOCIATES, 04/2019)
- 91.56 GROUND SURFACE ELEVATION (m)
- SITE CLASS E (REMAINDER OF THE SITE IS CLASS D)

BOREHOLE LOCATIONS WERE SURVEYED BY OTHERS AND ARE REFERENCED TO A GEODETIC DATUM.

patersongroup
consulting engineers

154 Colonnade Road South
Ottawa, Ontario K2E 7J5
Tel: (613) 226-7381 Fax: (613) 226-6344

NO.	REVISIONS	DATE	INITIAL
3	REVISED CONCEPTUAL PLAN	14/07/2021	OC
2	REVISED CONCEPTUAL PLAN ADDED TEST FILL PILES	04/02/2021	OC
1	CONCEPTUAL PLAN ADDED	09/01/2020	DJG

CAIVAN COMMUNITIES

GEOTECHNICAL INVESTIGATION
PROP. RESIDENTIAL DEVELOPMENT - CONSERVANCY LANDS EAST

OTTAWA, ONTARIO

Title:

TEST HOLE LOCATION PLAN

Scale: 1:6000	Date: 09/2019
Drawn by: MPG	Report No.: PG5036-1
Checked by: SD	PG5036-1
Approved by: DJG	Revision No.:

11x17

p:\autocad drawings\geotechnical\pg50xx\pg5036\pg5035-1 thlp east land (rev.03).dwg

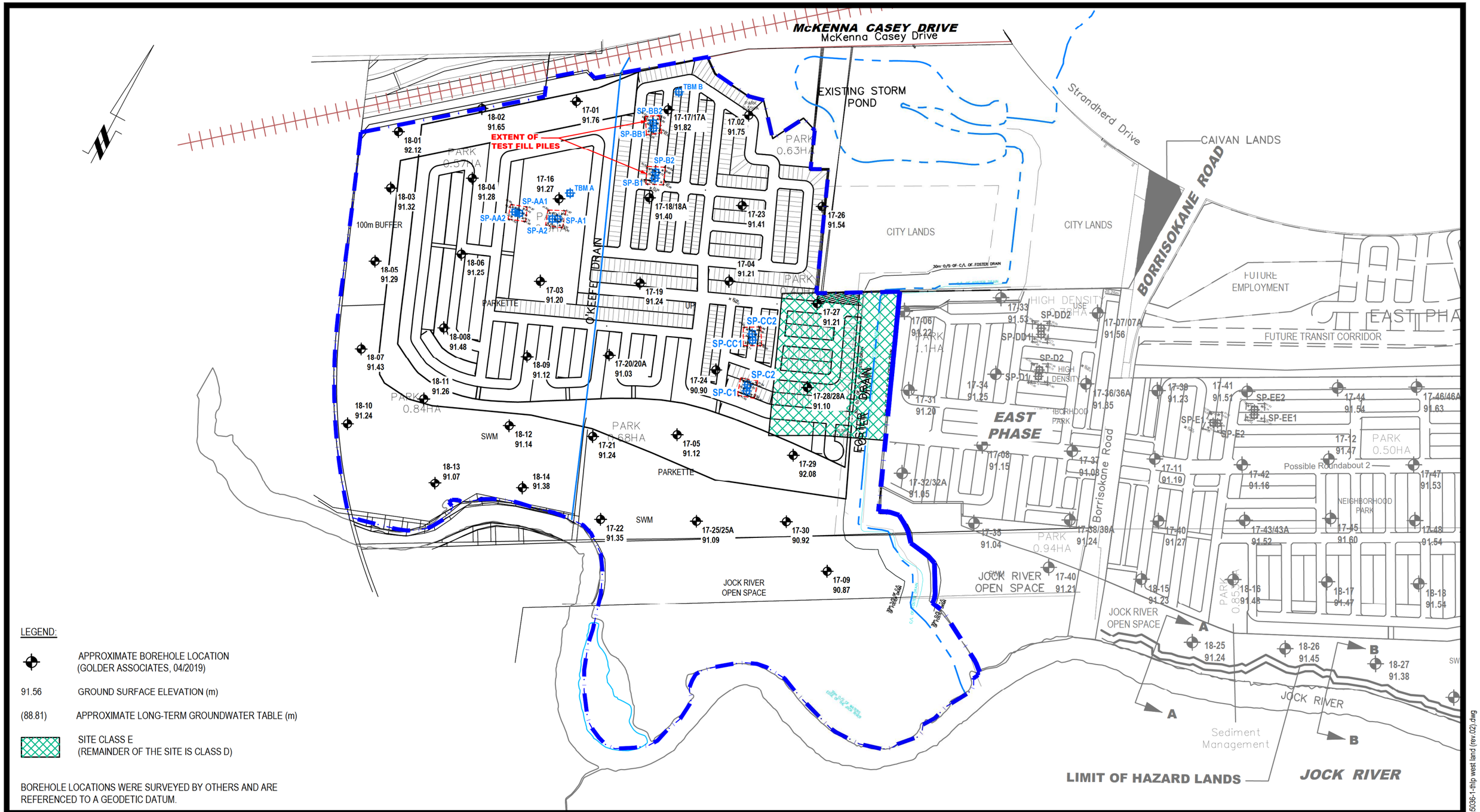

LEGEND:

- APPROXIMATE BOREHOLE LOCATION (GOLDER ASSOCIATES, 04/2019)
- 91.56 GROUND SURFACE ELEVATION (m)
- (88.81) APPROXIMATE LONG-TERM GROUNDWATER TABLE (m)
- SITE CLASS E (REMAINDER OF THE SITE IS CLASS D)

BOREHOLE LOCATIONS WERE SURVEYED BY OTHERS AND ARE REFERENCED TO A GEODETIC DATUM.

patersongroup
consulting engineers

154 Colonnade Road South
Ottawa, Ontario K2E 7J5
Tel: (613) 226-7381 Fax: (613) 226-6344

NO.	REVISIONS	DATE	INITIAL
1	UPDATED TO LATEST CONCEPTUAL PLAN	19/10/2021	OC

CAIVAN COMMUNITIES

GEOTECHNICAL INVESTIGATION
PROP. RESIDENTIAL DEVELOPMENT - CONSERVANCY LANDS WEST

OTTAWA, ONTARIO

Title:

TEST HOLE LOCATION PLAN

Scale: 1:6000	Date: 02/2021
Drawn by: MPG	Report No.: PG5036-2
Checked by: SD	Dwg. No.: PG5036-4
Approved by: SD	Revision No.:

11x17

c:\users\robertg\documents\pg5036\pg5036-1-thlp west land (rev.02).dwg

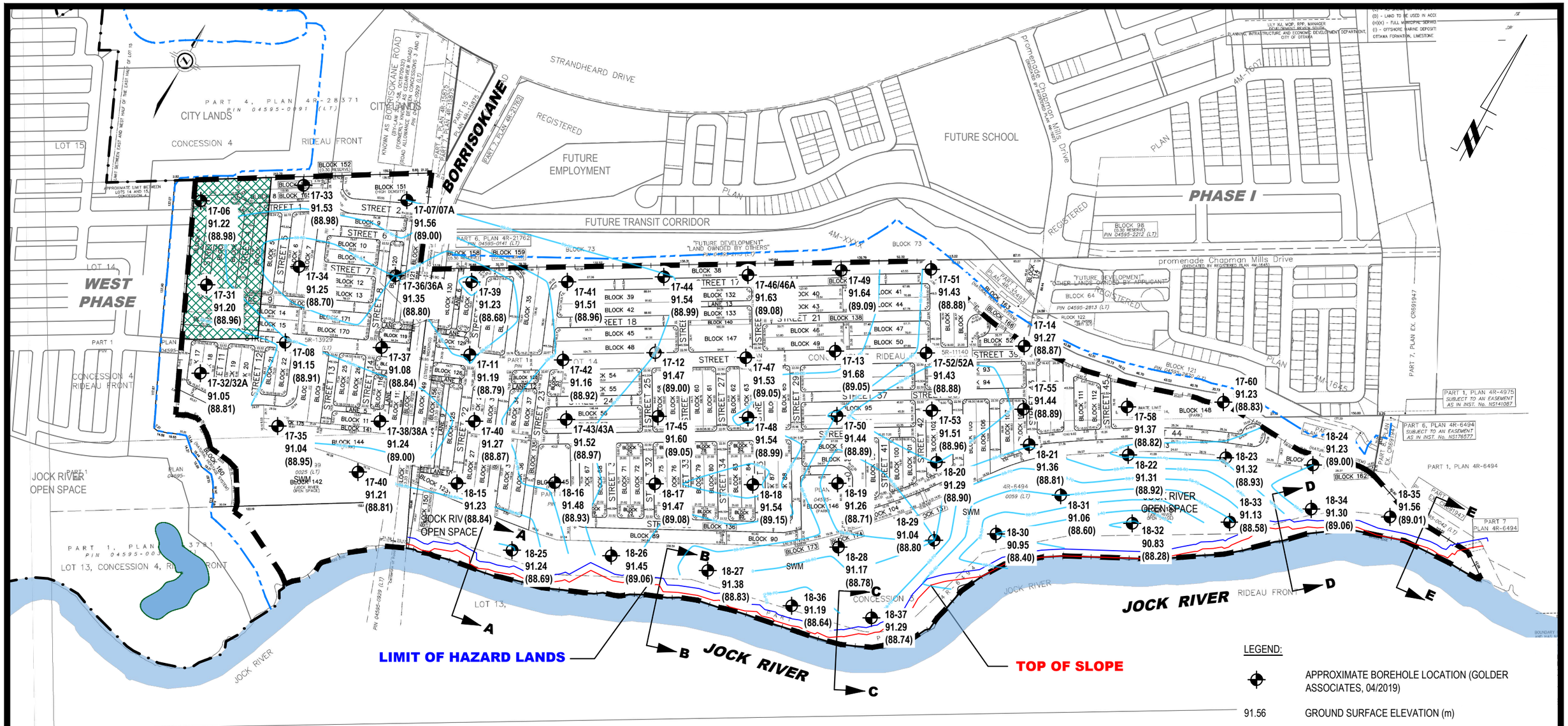

LEGEND:

- APPROXIMATE BOREHOLE LOCATION (GOLDER ASSOCIATES, 04/2019)
- 91.56 GROUND SURFACE ELEVATION (m)
- (89.15) APPROXIMATE LONG-TERM GROUNDWATER TABLE ELEVATION (m)
- SITE CLASS E (REMAINDER OF THE SITE IS CLASS D)
- 88.40 GROUNDWATER CONTOURS (m)

BOREHOLE LOCATIONS WERE SURVEYED BY OTHERS AND ARE REFERENCED TO A GEODETIC DATUM.

patersongroup
consulting engineers

154 Colonnade Road South
Ottawa, Ontario K2E 7J5
Tel: (613) 226-7381 Fax: (613) 226-6344

NO.	REVISIONS	DATE	INITIAL

CAIVAN COMMUNITIES

GEOTECHNICAL INVESTIGATION
PROP. RESIDENTIAL DEVELOPMENT - CONSERVANCY LANDS EAST

OTTAWA, ONTARIO

Title:
APPROXIMATE LONG-TERM GROUNDWATER TABLE PLAN

Scale: 1:6000	Date: 02/2021
Drawn by: MPG	Report No.: PG5036-1
Checked by: SD	Dwg. No.: PG5036-10
Approved by: DJG	Revision No.:

11x17

p:\autocad drawings\geotechnical\pg50xx\pg5036\pg5036-1 thlp east land (rev.02).dwg

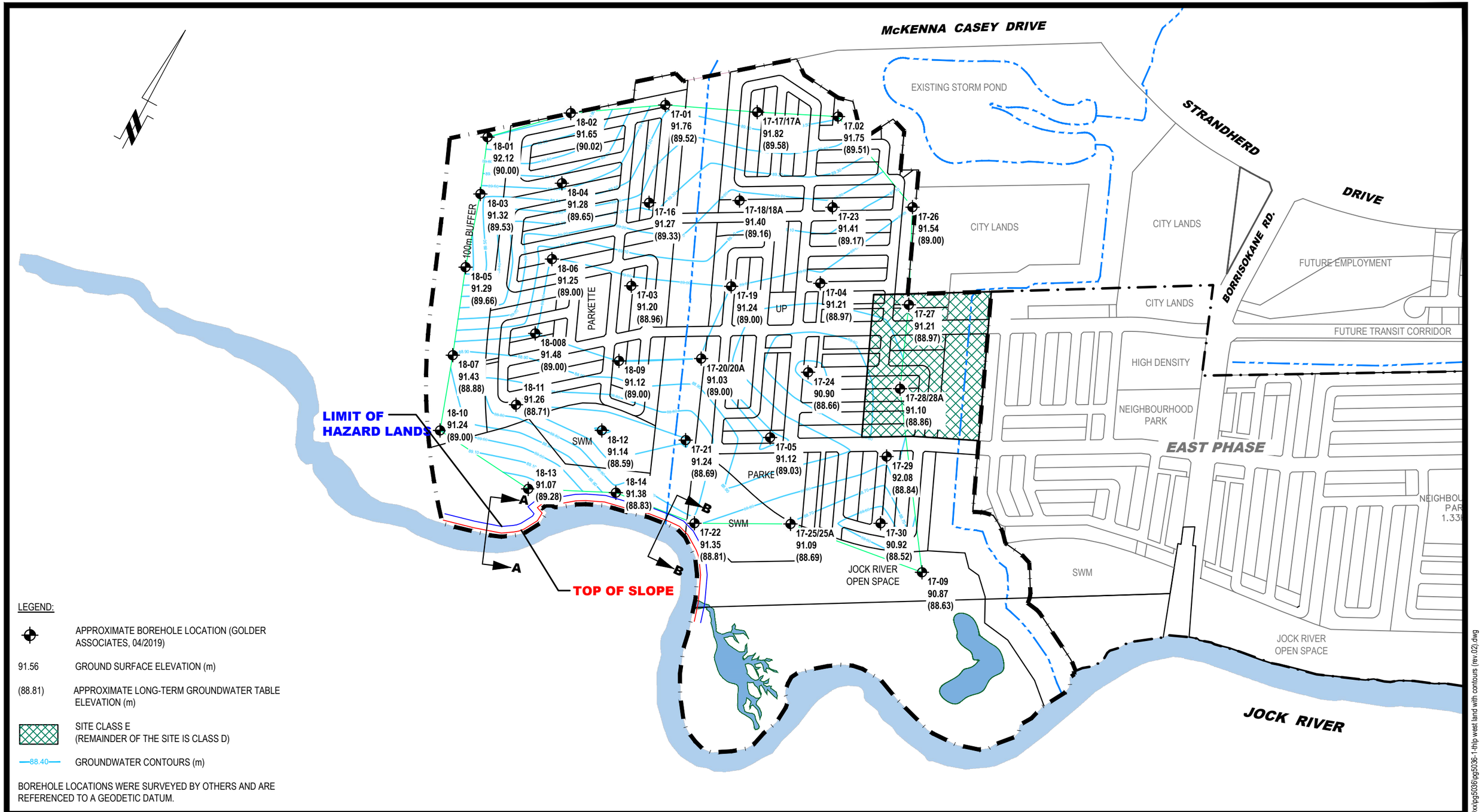

LEGEND:

- APPROXIMATE BOREHOLE LOCATION (GOLDER ASSOCIATES, 04/2019)
- 91.56 — GROUND SURFACE ELEVATION (m)
- (88.81) — APPROXIMATE LONG-TERM GROUNDWATER TABLE ELEVATION (m)
- SITE CLASS E (REMAINDER OF THE SITE IS CLASS D)
- 88.40 — GROUNDWATER CONTOURS (m)

BOREHOLE LOCATIONS WERE SURVEYED BY OTHERS AND ARE REFERENCED TO A GEODETIC DATUM.

patersongroup
consulting engineers

154 Colonnade Road South
Ottawa, Ontario K2E 7J5
Tel: (613) 226-7381 Fax: (613) 226-6344

NO.	REVISIONS	DATE	INITIAL

CAIVAN COMMUNITIES

GEOTECHNICAL INVESTIGATION
PROP. RESIDENTIAL DEVELOPMENT - CONSERVANCY LANDS WEST

OTTAWA, ONTARIO

Title:
APPROXIMATE LONG-TERM GROUNDWATER TABLE PLAN

Scale: 1:6000	Date: 02/2021
Drawn by: MPG	Report No.: PG5036-2
Checked by: SD	Dwg. No.: PG5036-12
Approved by: SD	Revision No.:

p:\autocad drawings\geotechnical\pg50xx\pg5036\pg5036-1-thlp west land with contours (rev.02).dwg

11x17

Figure 1: BH17-11 - Groundwater Monitoring Levels vs Precipitation Data

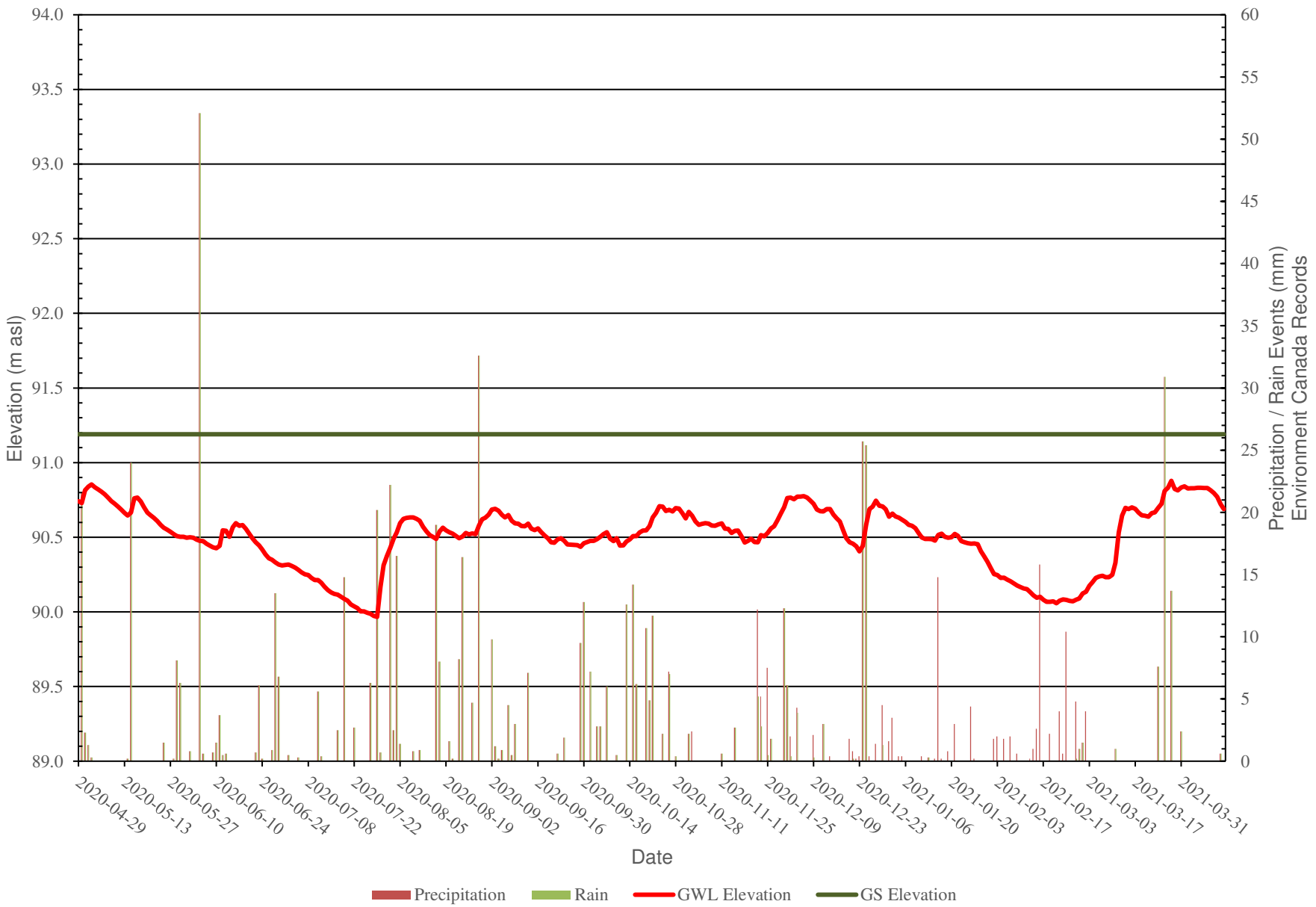

Figure 2: BH17-18s - Groundwater Monitoring Levels vs Precipitation Data

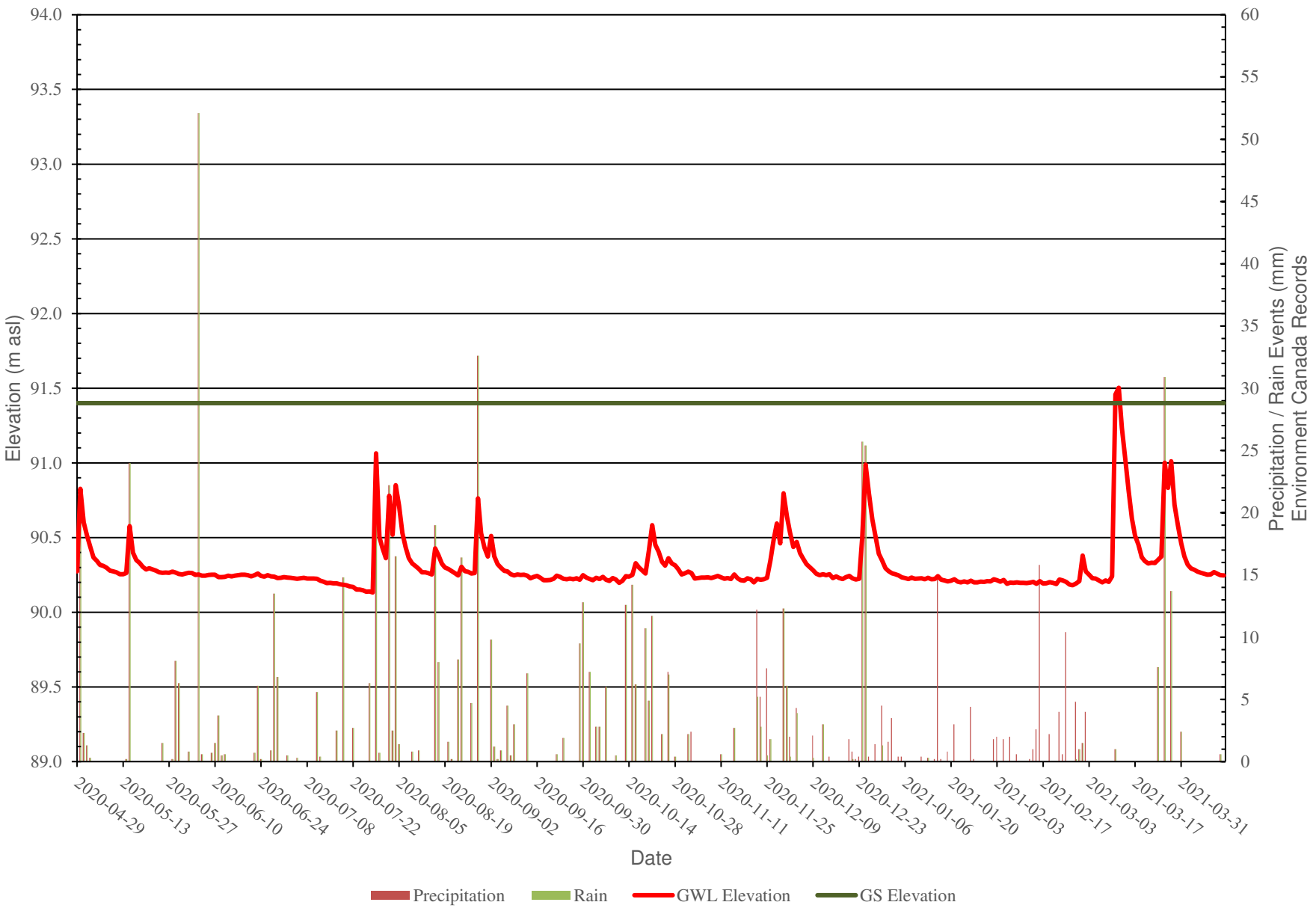

Figure 3: BH17-20s - Groundwater Monitoring Levels vs Precipitation Data

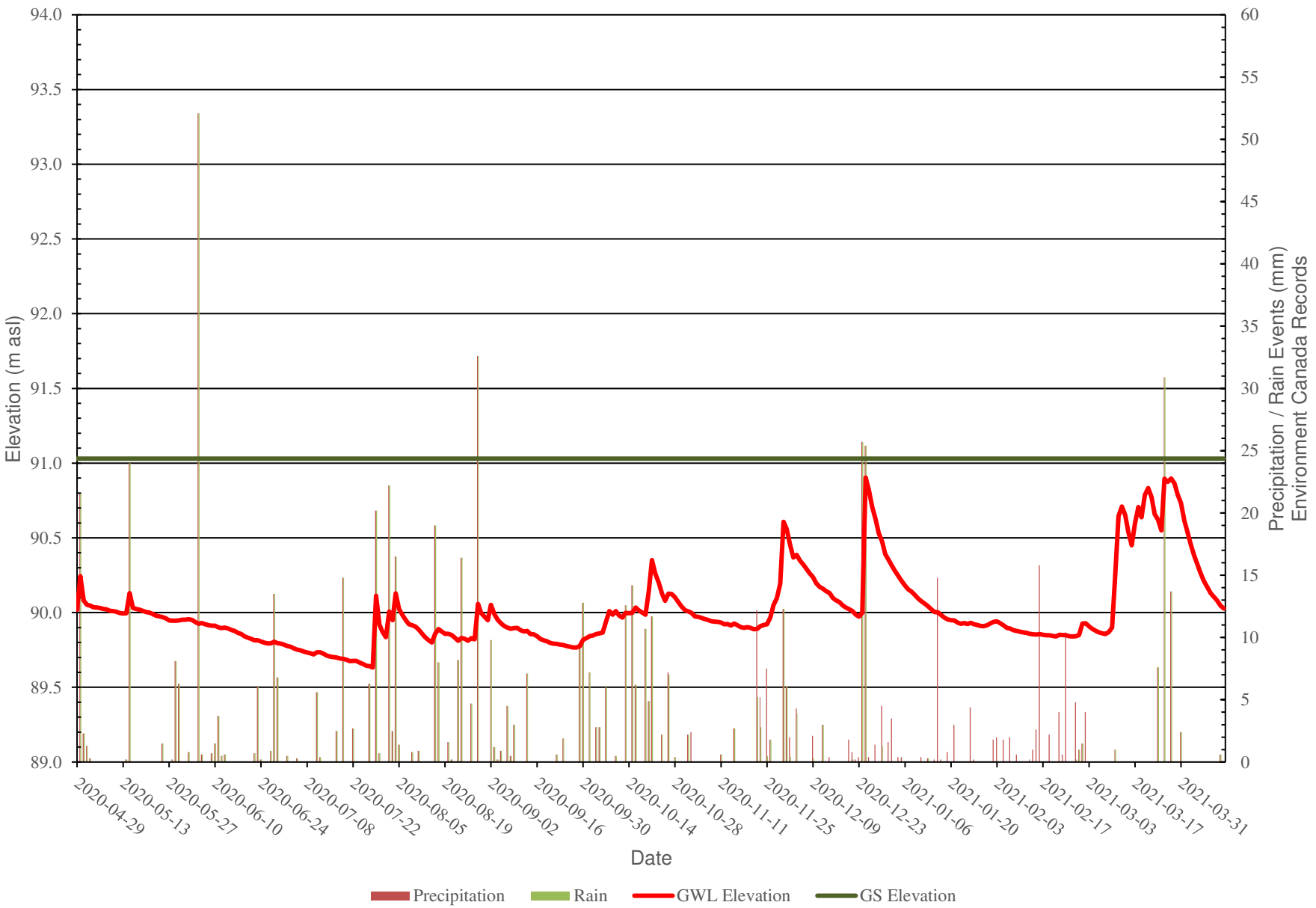

Figure 4: BH17-25s - Groundwater Monitoring Levels vs Precipitation Data

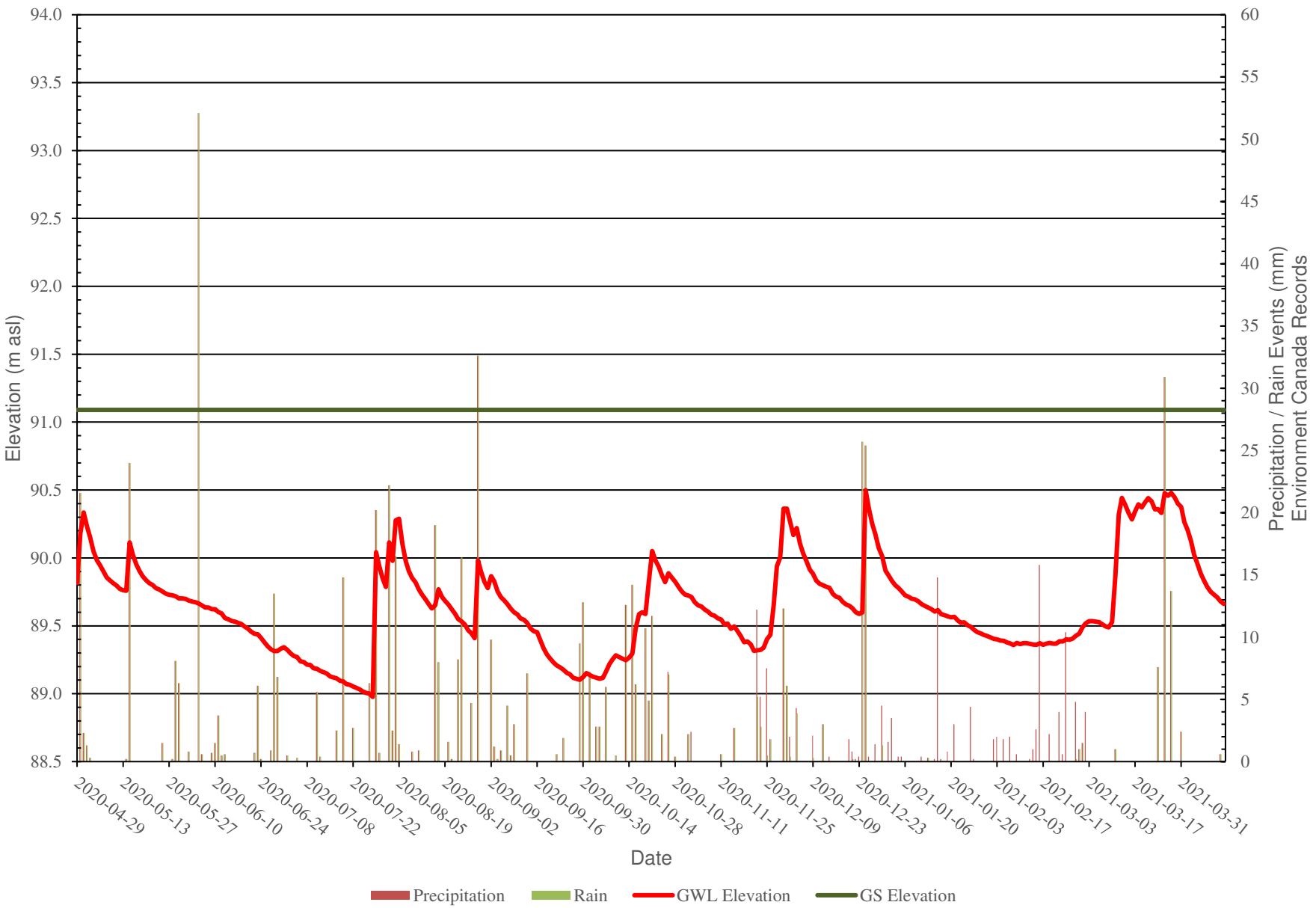

Figure 5: BH17-26 - Groundwater Monitoring Levels vs Precipitation Data

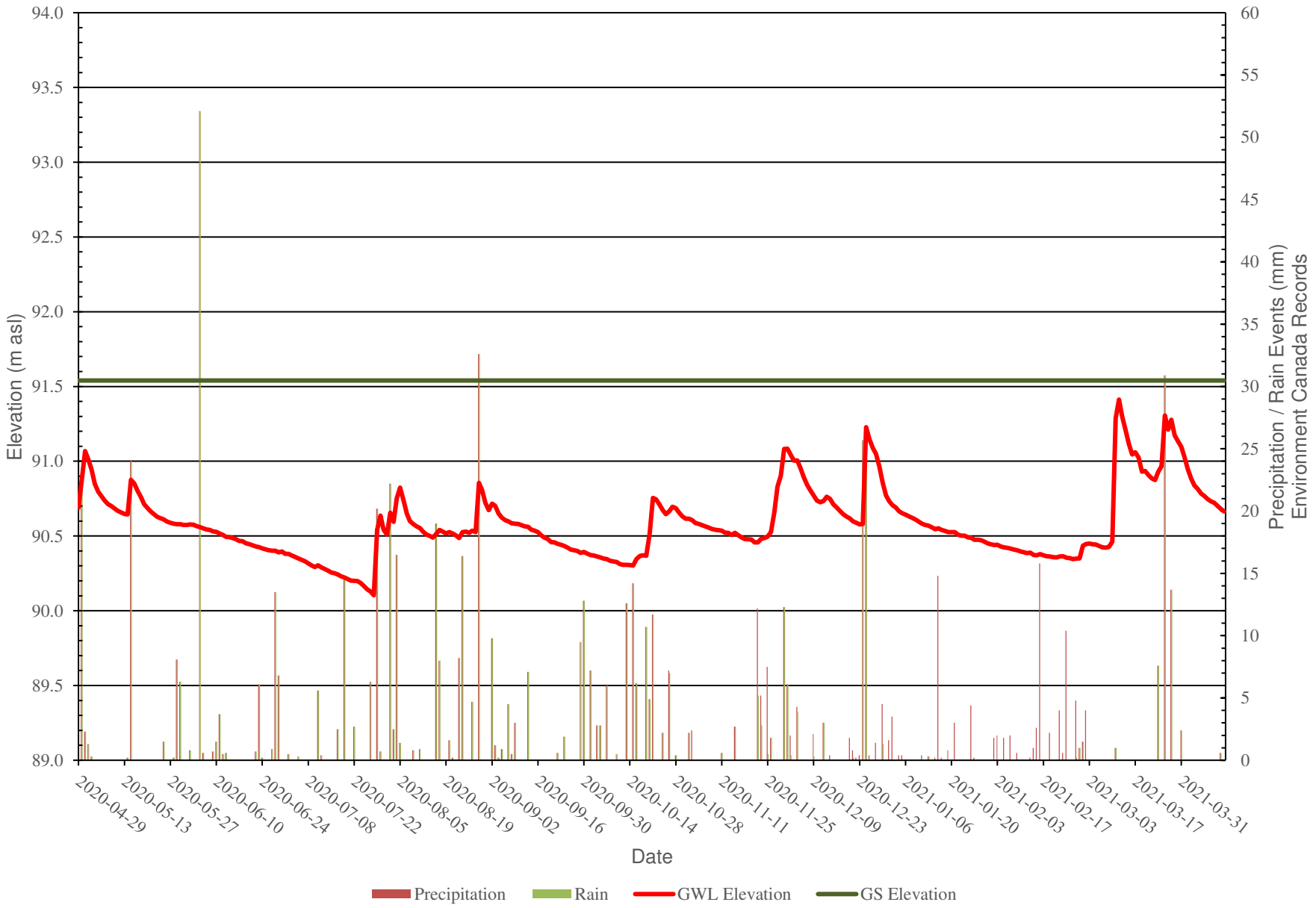

Figure 6: BH17-32s - Groundwater Monitoring Levels vs Precipitation Data

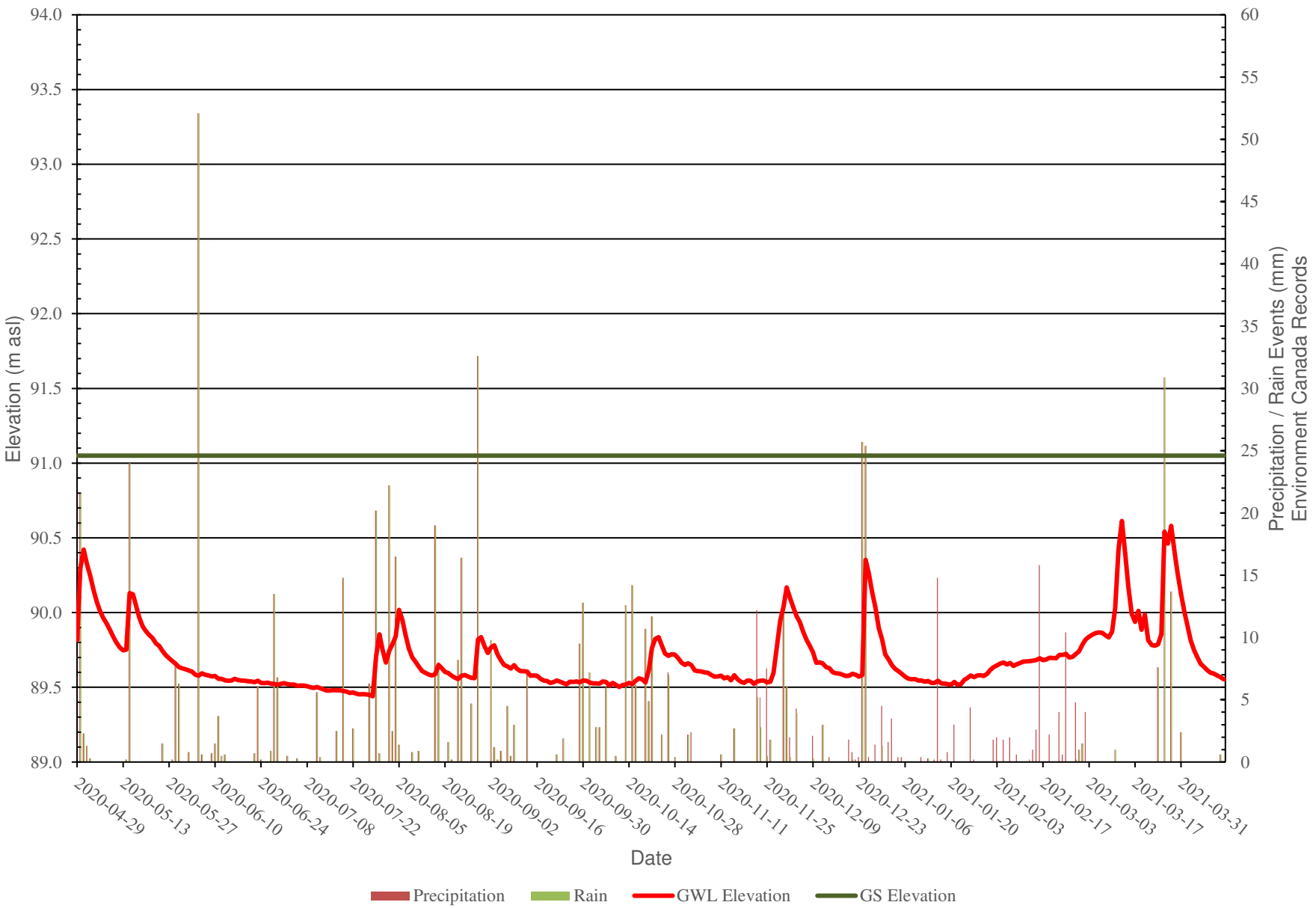

Figure 7: BH17-36 - Groundwater Monitoring Levels vs Precipitation Data

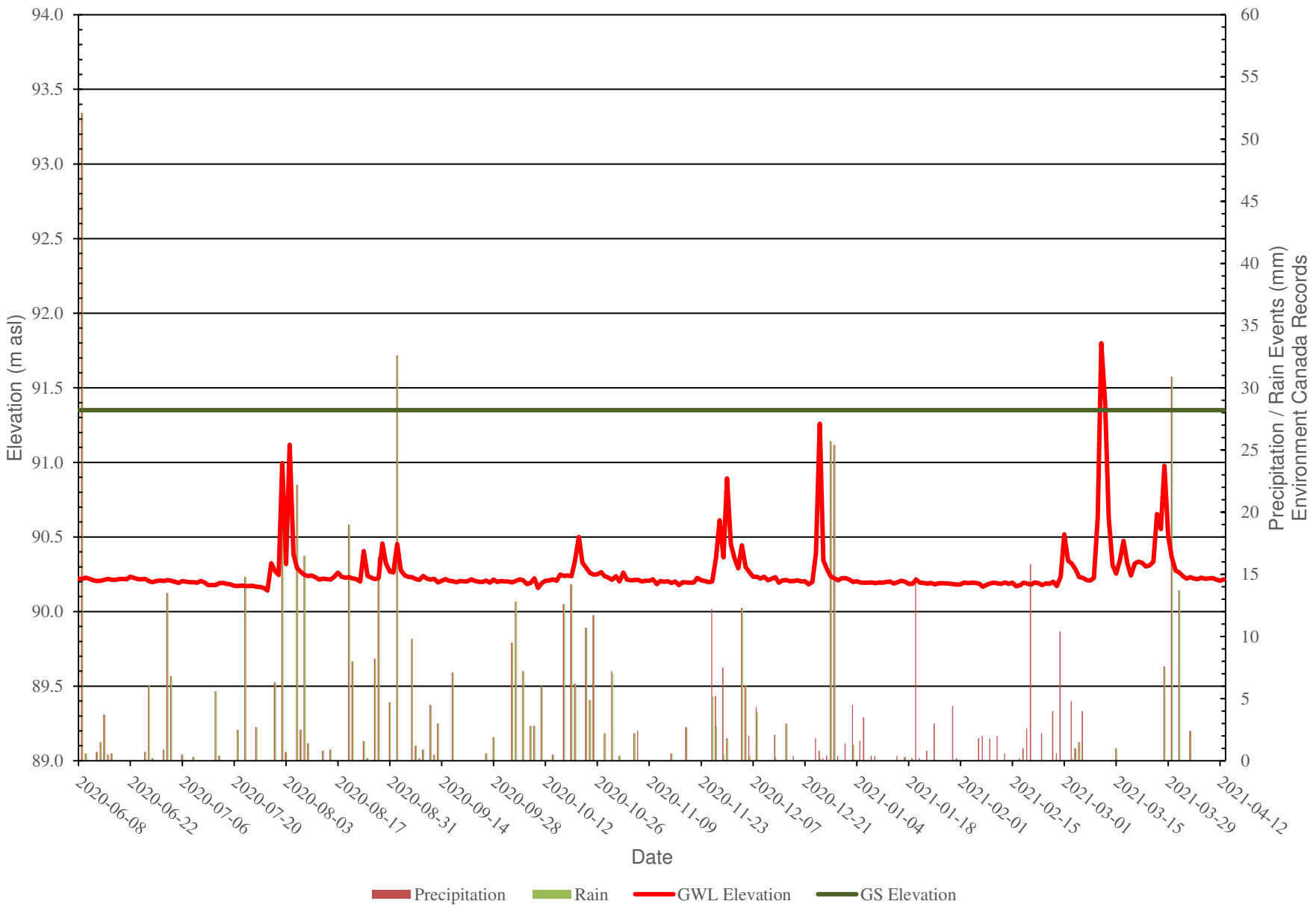

Figure 8: BH17-38s - Groundwater Monitoring Levels vs Precipitation Data

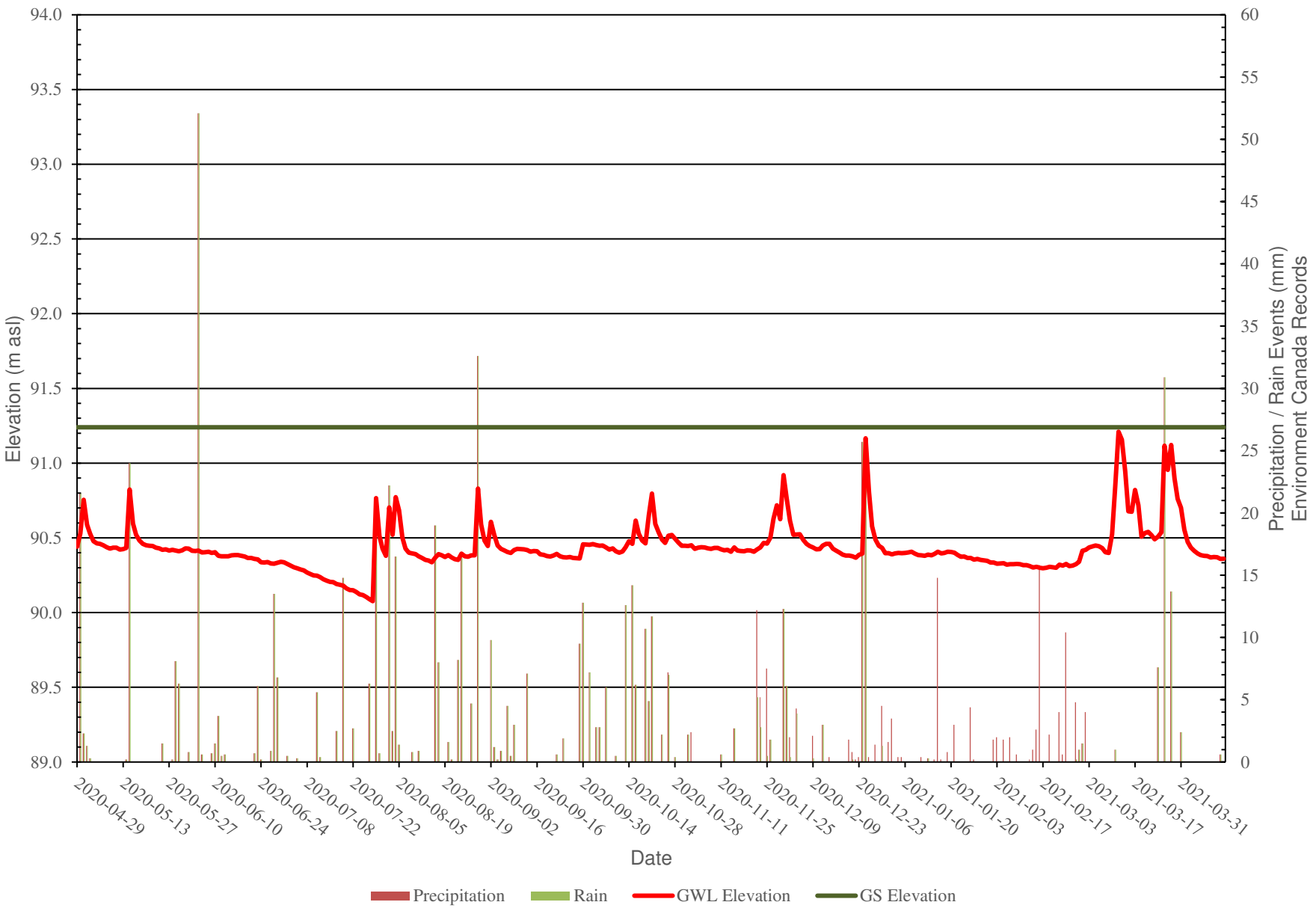

Figure 9: BH17-43 - Groundwater Monitoring Levels vs Precipitation Data

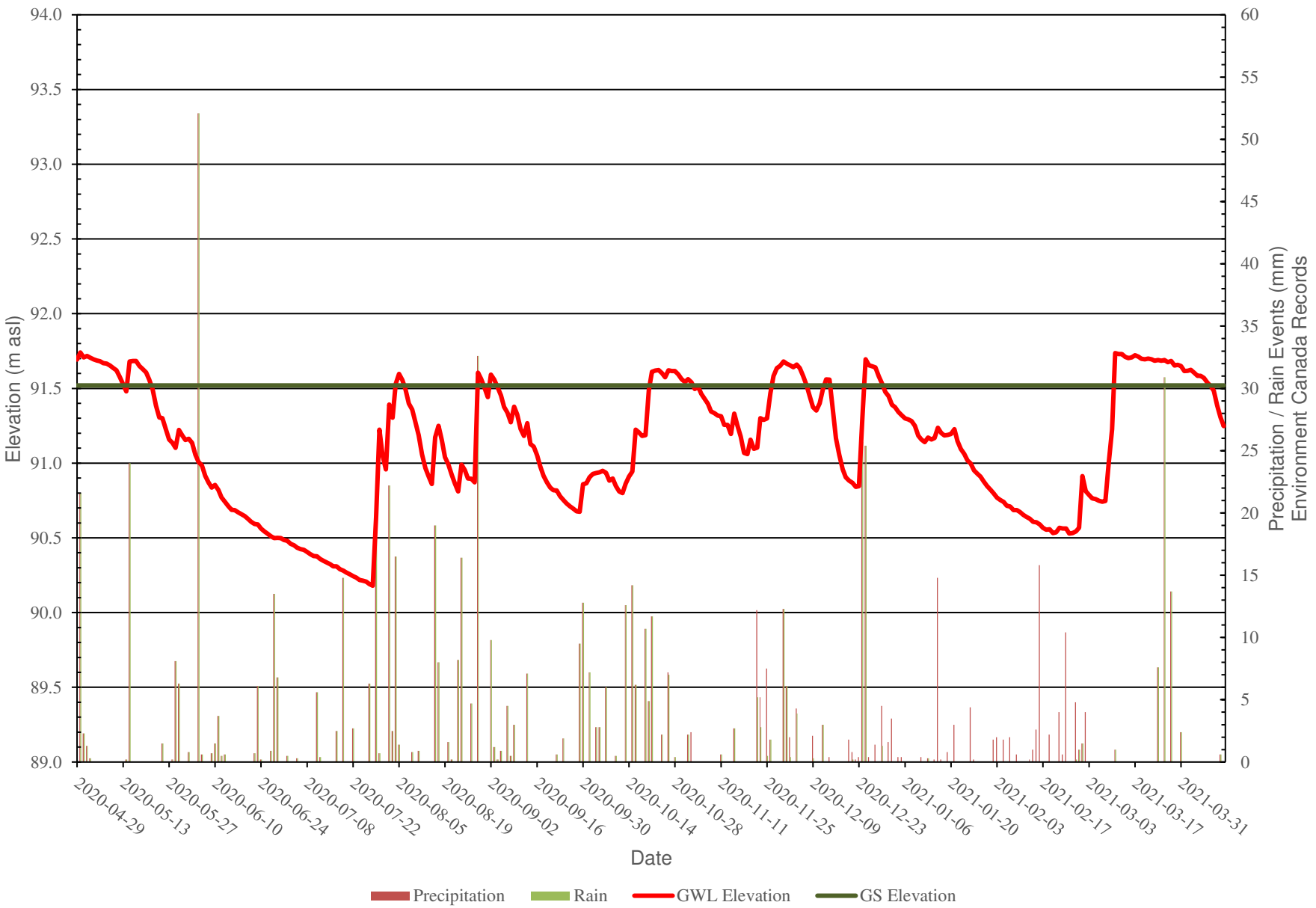

Figure 10: BH17-46s - Groundwater Monitoring Levels vs Precipitation Data

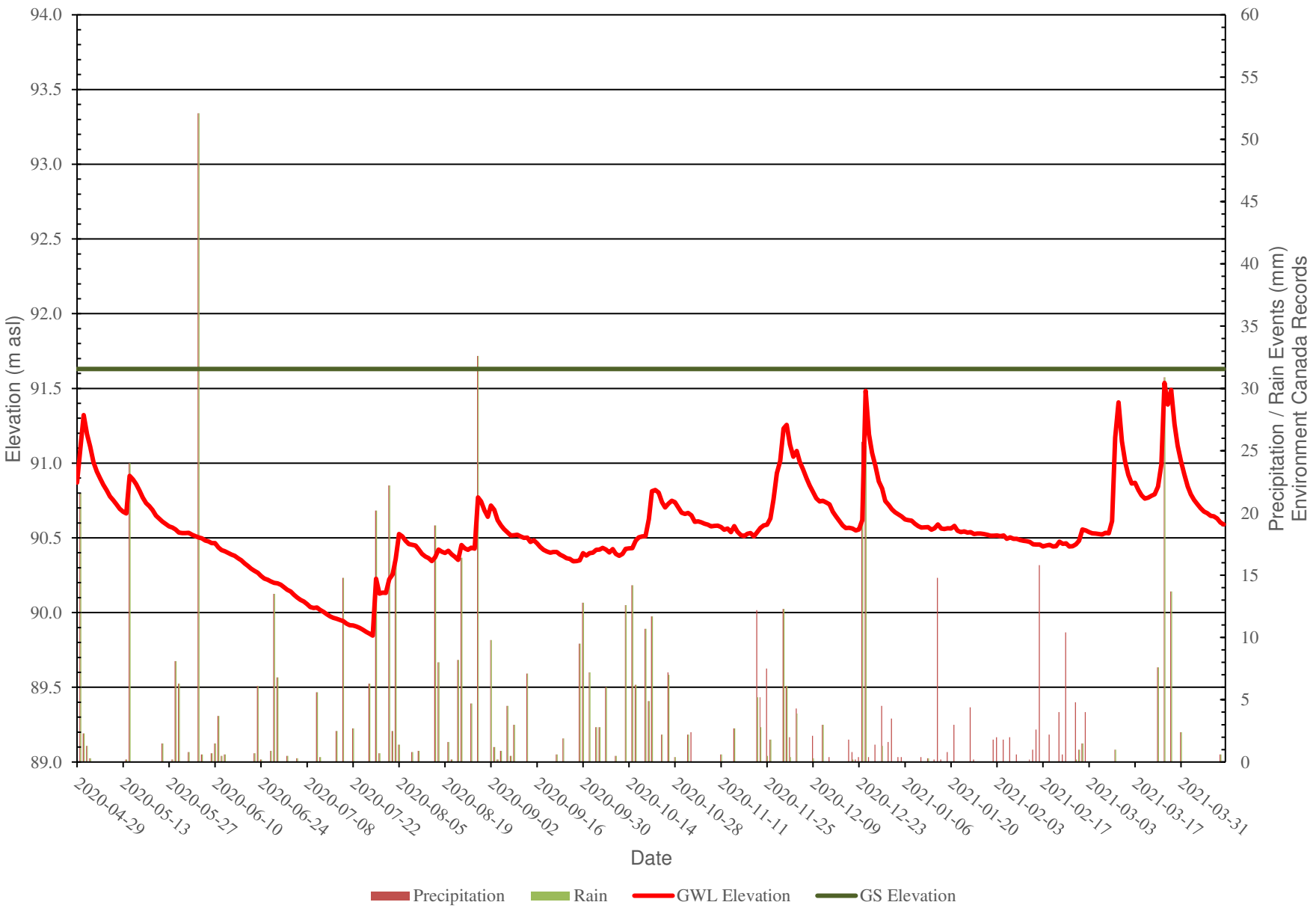

Figure 11: BH17-52 - Groundwater Monitoring Levels vs Precipitation Data

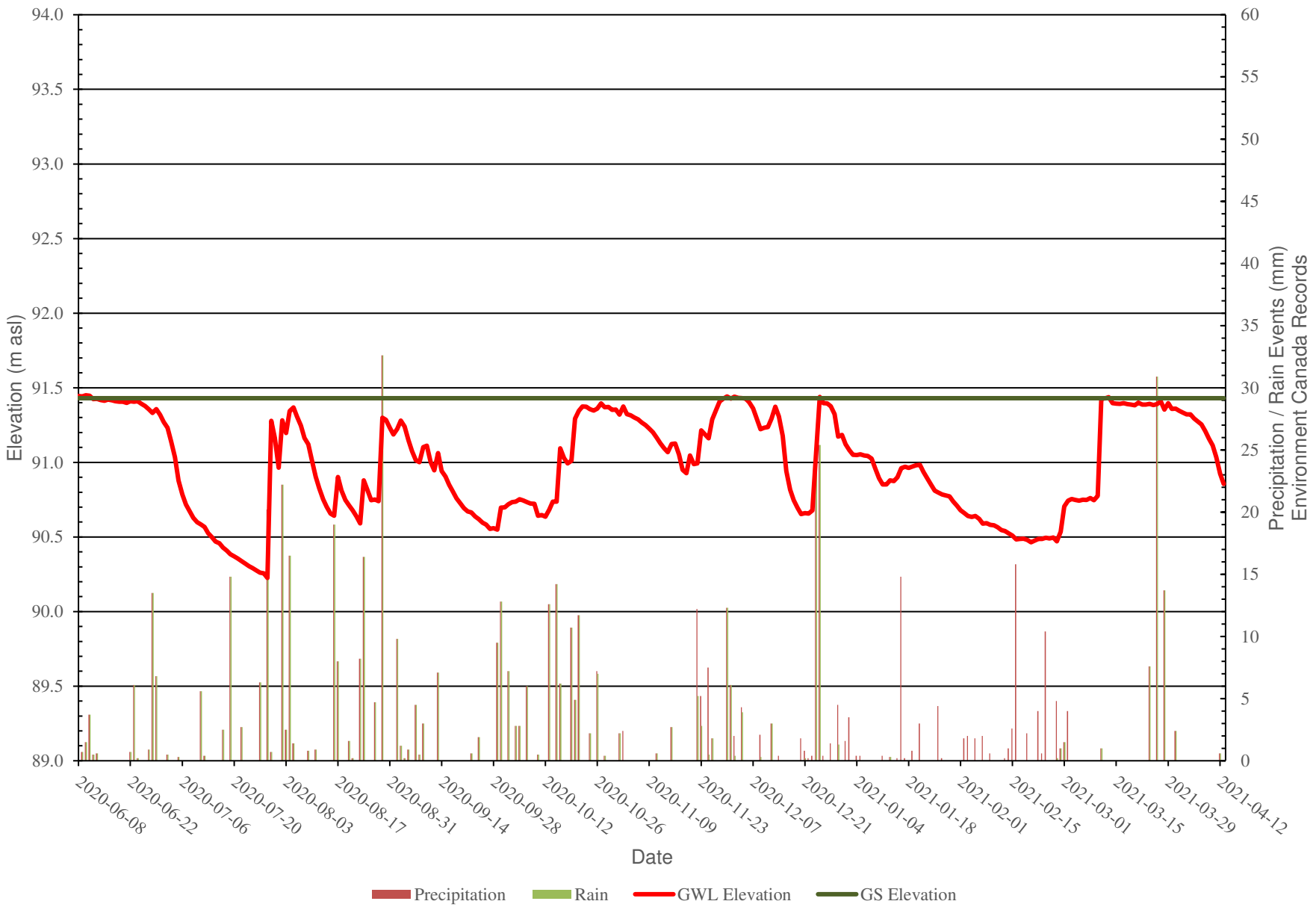

Figure 12: BH18-04s - Groundwater Monitoring Levels vs Precipitation Data

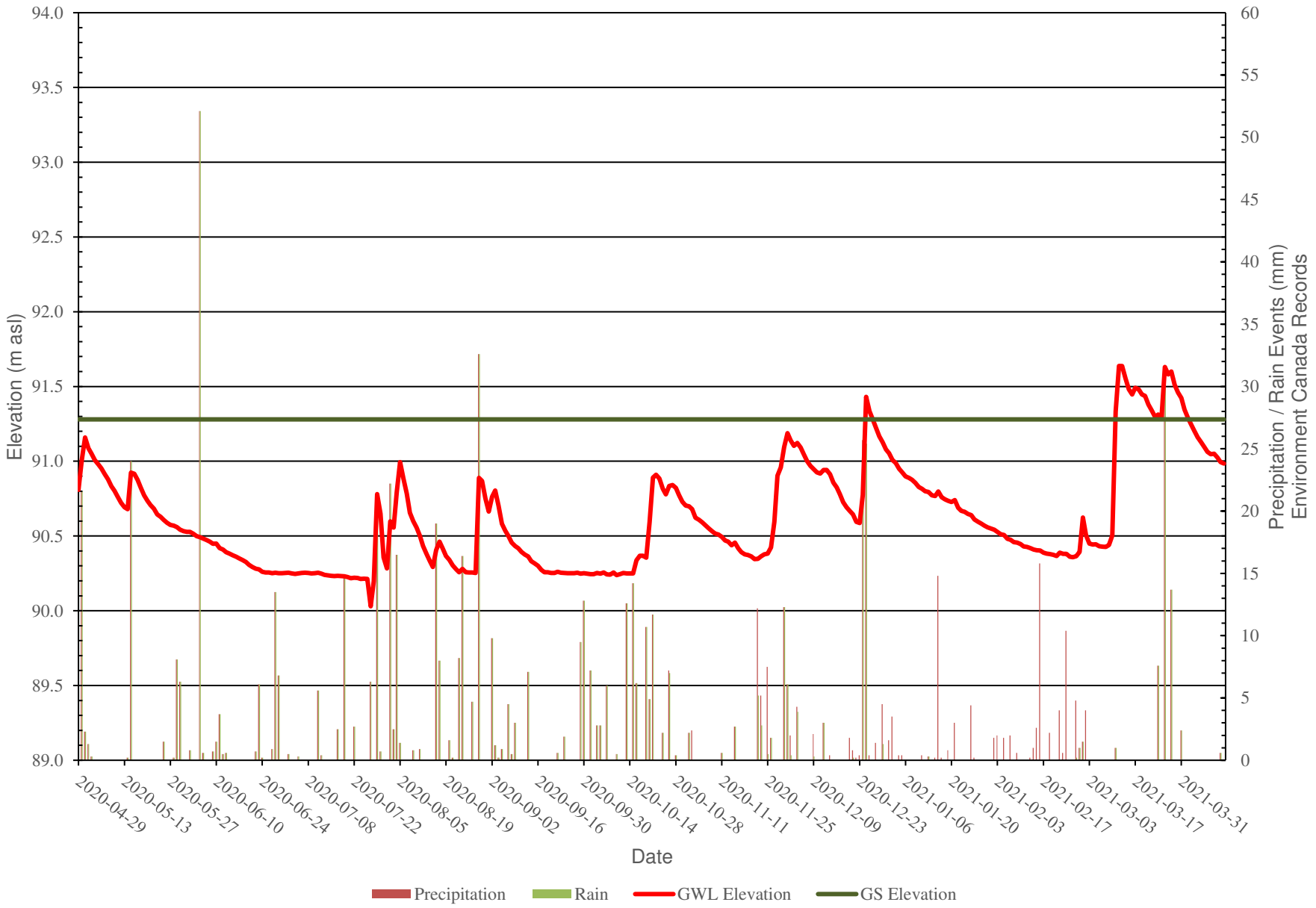

Figure 13: BH18-06 - Groundwater Monitoring Levels vs Precipitation Data

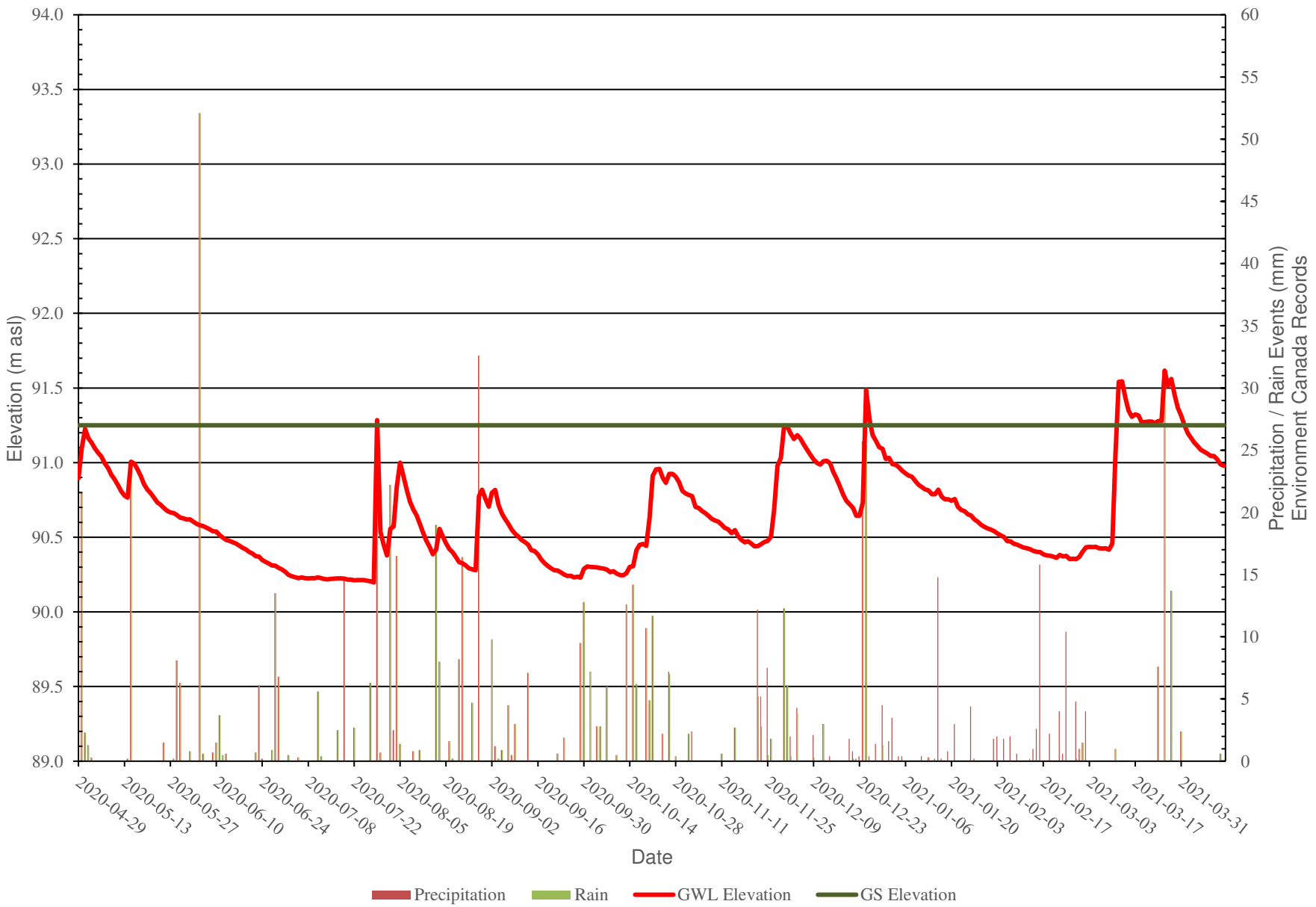

Figure 14: BH18-08 - Groundwater Monitoring Levels vs Precipitation Data

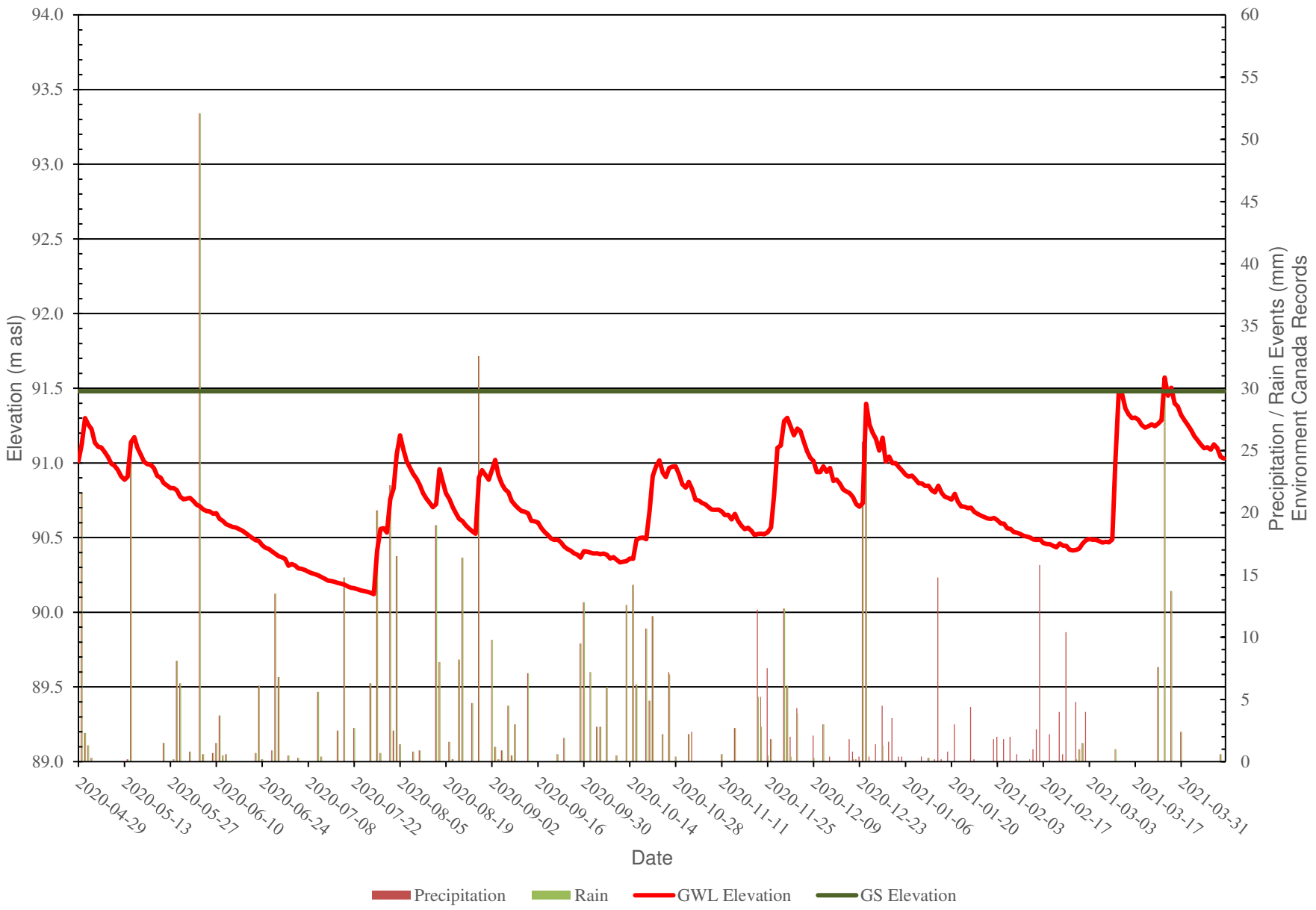

Figure 15: BH18-18s - Groundwater Monitoring Levels vs Precipitation Data

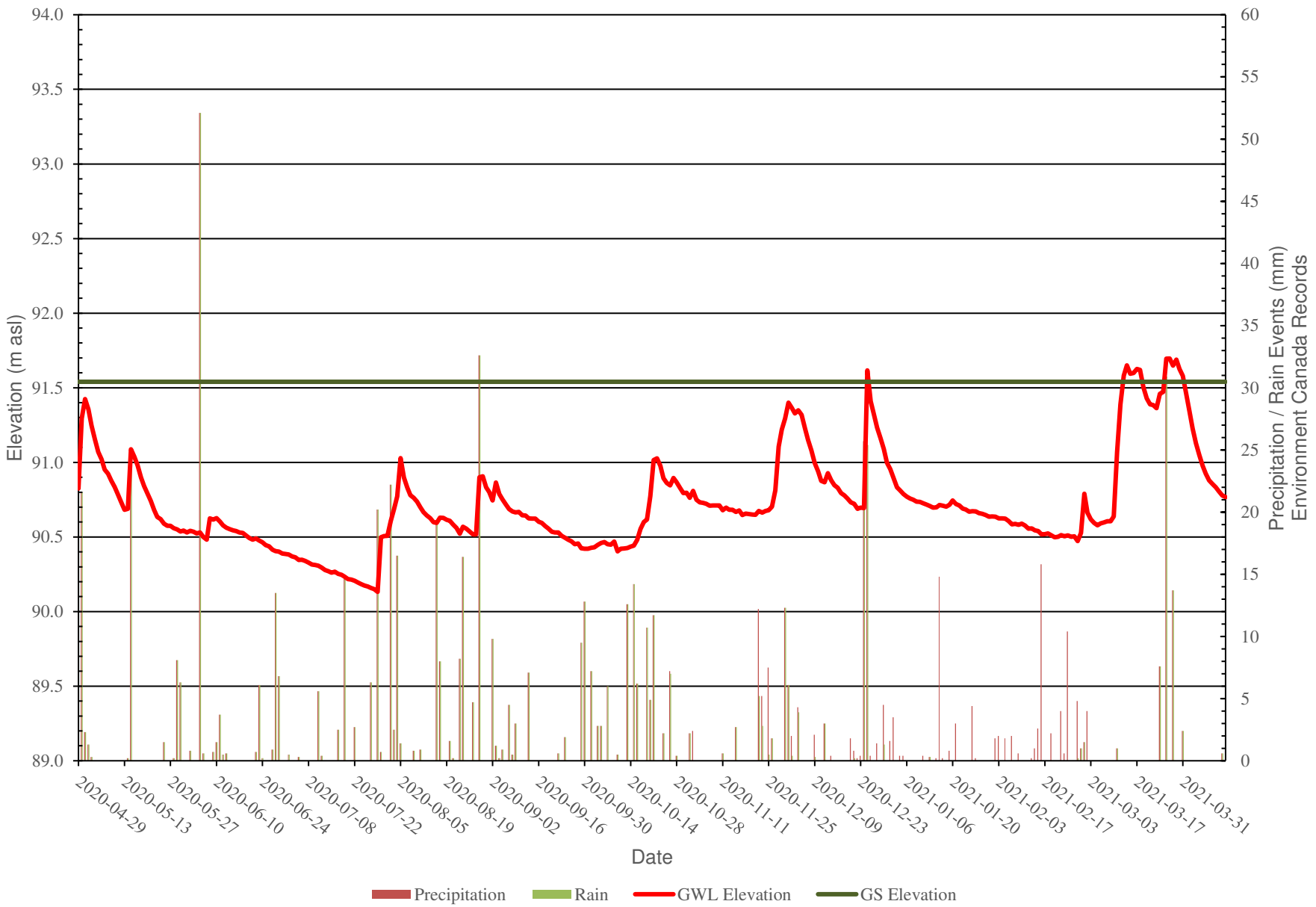

Figure 16: BH18-19 - Groundwater Monitoring Levels vs Precipitation Data

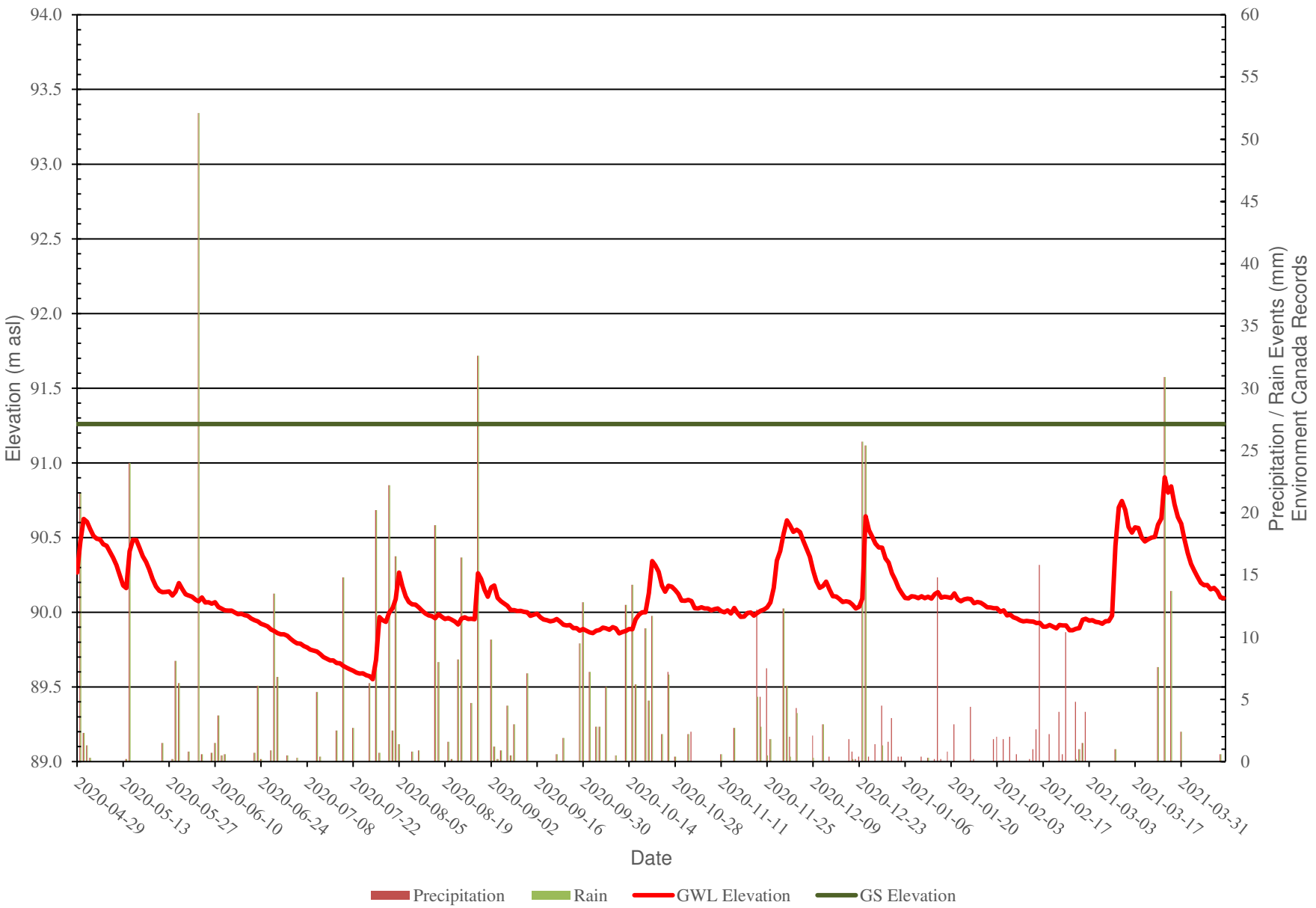

Figure 17: BH18-22s - Groundwater Monitoring Levels vs Precipitation Data

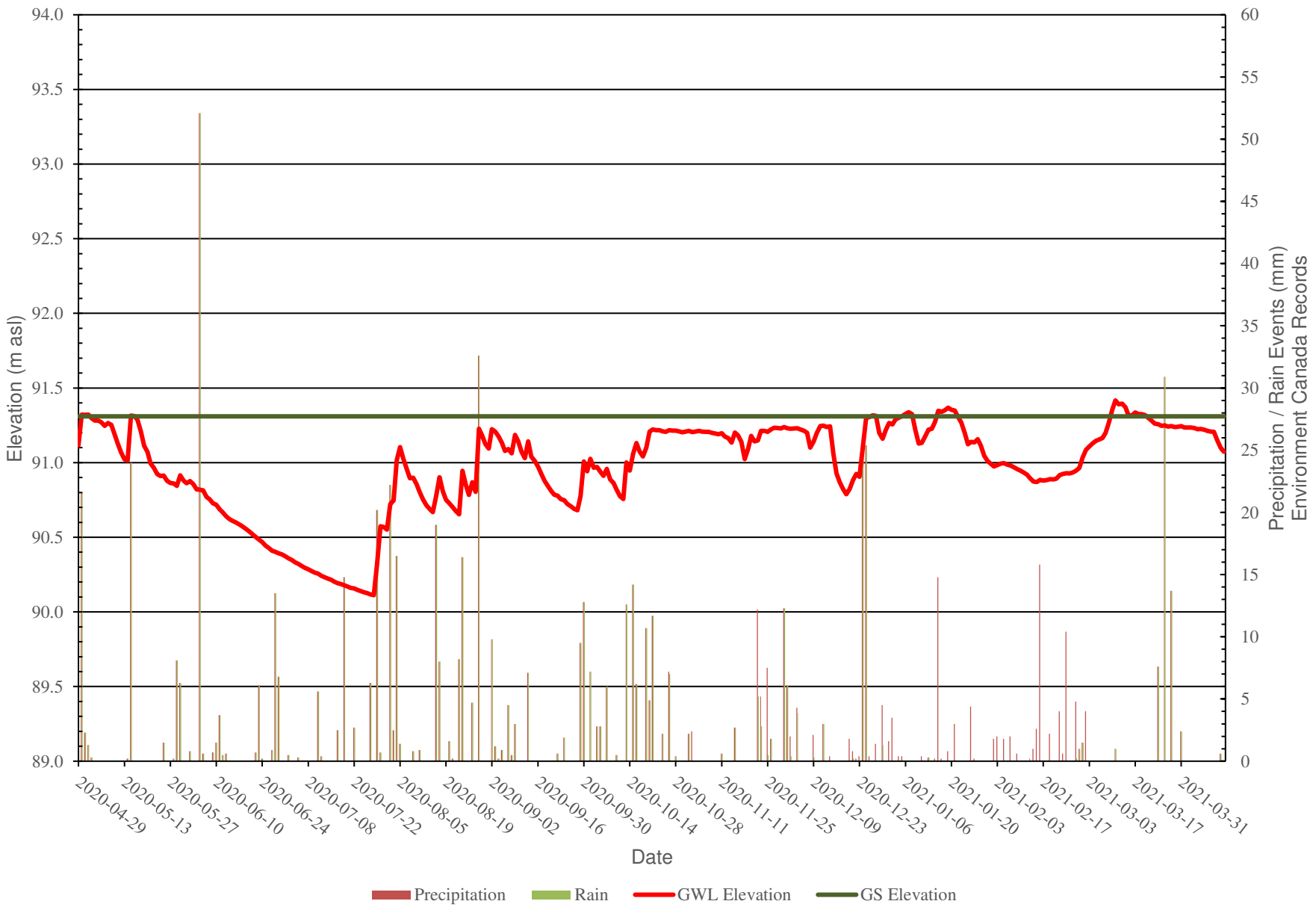

Hvorslev Hydraulic Conductivity Analysis

Project: Caivan Communities - Conservancy Land
Test Location: BH18-06
Test: Falling Head
Date: May 3, 2021

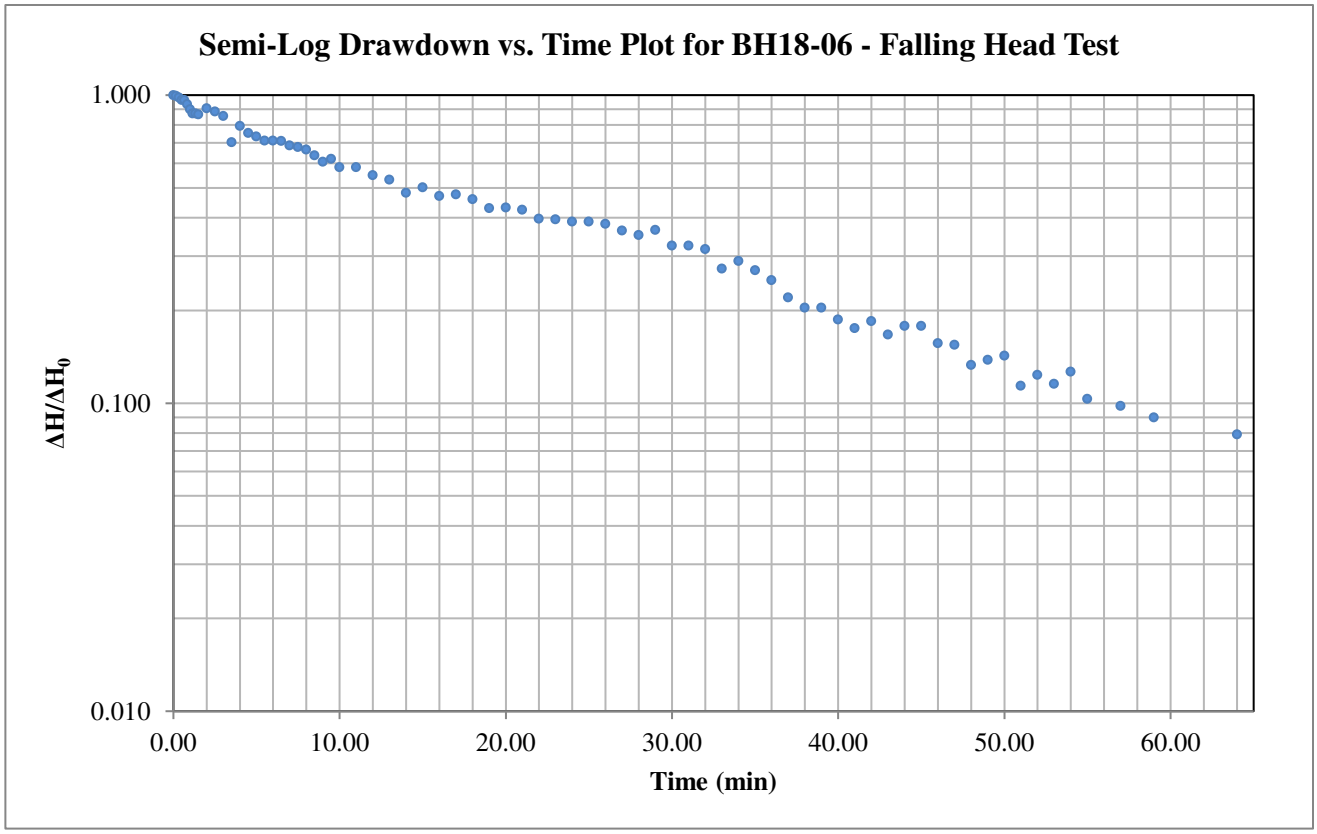

Hvorslev Horizontal Hydraulic Conductivity

$$K = \frac{\pi r_c^2}{F} \frac{1}{t^*} \ln\left(\frac{\Delta H^*}{\Delta H_0}\right)$$

Hvorslev Shape Factor

$$F = \frac{2\pi L}{\ln\left(\frac{2L}{D}\right)}$$

Valid for L>>D

Hvorslev Shape Factor F: 2.07565

Well Parameters:

L	1.5	m	Saturated length of screen or open hole
D	0.032	m	Diameter of well
r_c	0.016	m	Radius of well

Data Points (from plot):

t*: 25.295 minutes $\Delta H^*/\Delta H_0$: 0.37

Horizontal Hydraulic Conductivity
K = 2.54E-07 m/sec

Hvorslev Hydraulic Conductivity Analysis

Project: Caivan Communities - Conservancy Land
Test Location: BH18-18
Test: Falling Head
Date: May 7, 2021

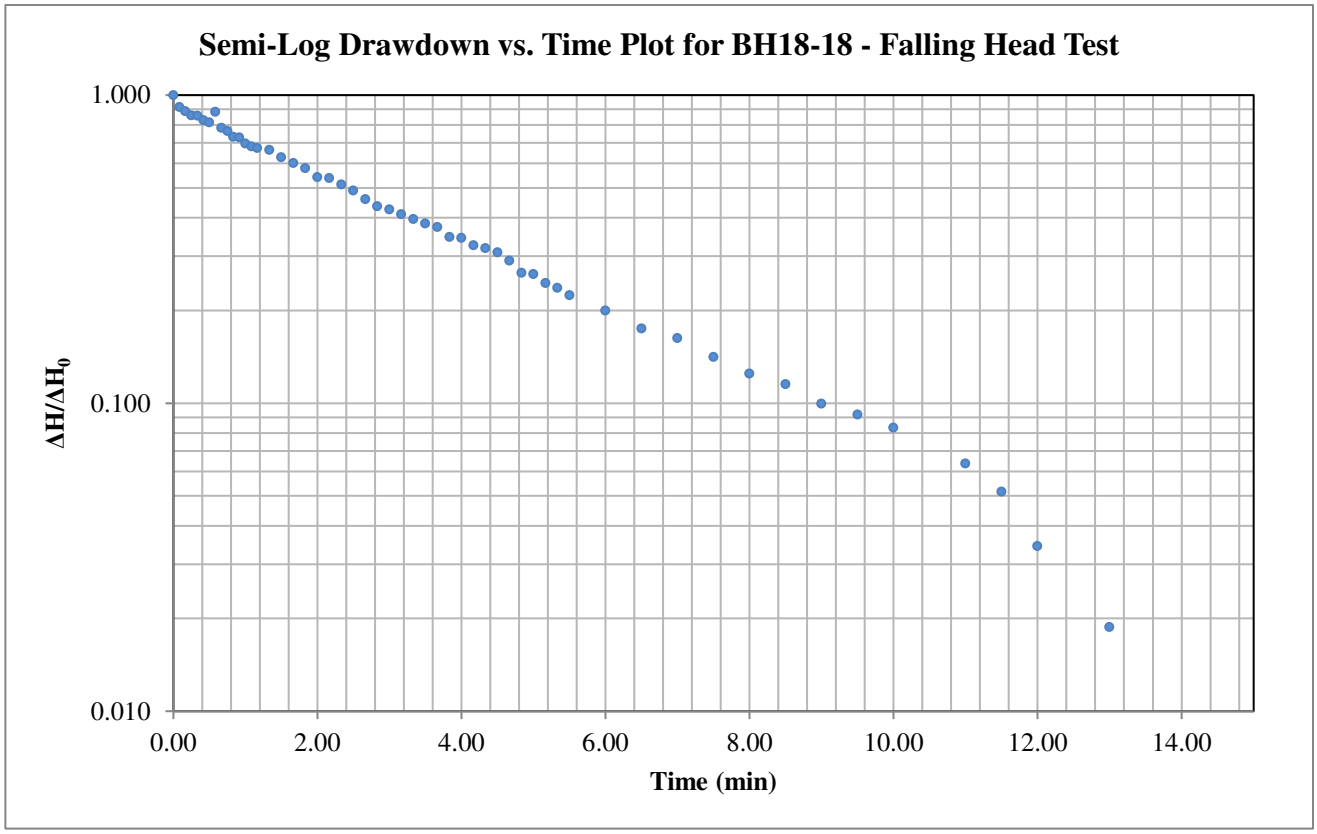

Hvorslev Horizontal Hydraulic Conductivity

$$K = \frac{\pi r_c^2}{F} \frac{1}{t^*} \ln\left(\frac{\Delta H^*}{\Delta H_0}\right)$$

Hvorslev Shape Factor

$$F = \frac{2\pi L}{\ln\left(\frac{2L}{D}\right)}$$

Valid for L>>D

Hvorslev Shape Factor F: 2.07565

Well Parameters:

L	1.5	m	Saturated length of screen or open hole
D	0.032	m	Diameter of well
r_c	0.016	m	Radius of well

Data Points (from plot):

t*: 3.671 minutes $\Delta H^*/\Delta H_0$: 0.37

Horizontal Hydraulic Conductivity
K = 1.75E-06 m/sec

Hvorslev Hydraulic Conductivity Analysis

Project: Caivan Communities - Conservancy Land
Test Location: BH18-19
Test: Falling Head
Date: May 7, 2021

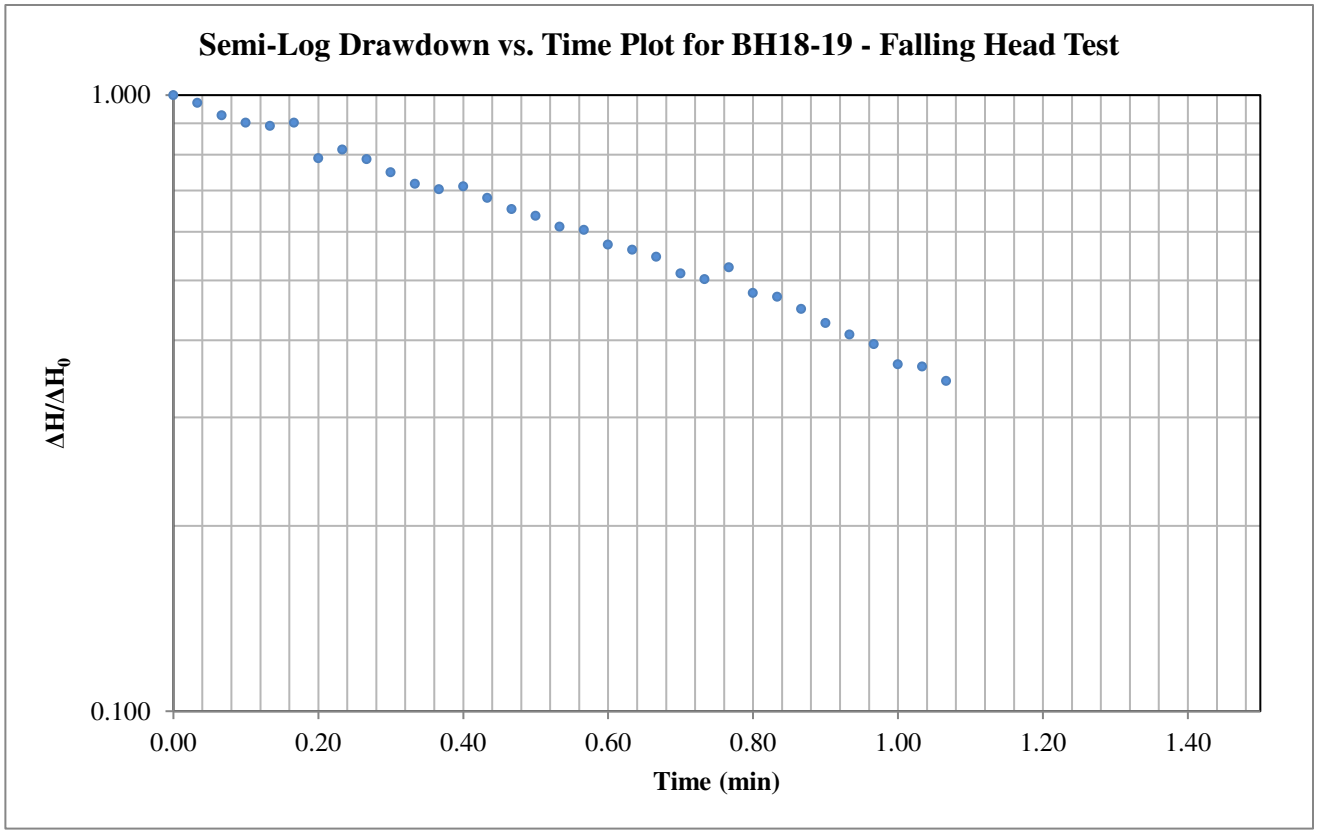

Hvorslev Horizontal Hydraulic Conductivity

$$K = \frac{\pi r_c^2}{F} \frac{1}{t^*} \ln\left(\frac{\Delta H^*}{\Delta H_0}\right)$$

Hvorslev Shape Factor

$$F = \frac{2\pi L}{\ln\left(\frac{2L}{D}\right)}$$

Valid for L>>D

Hvorslev Shape Factor F: 2.07565

Well Parameters:

L	1.5	m	Saturated length of screen or open hole
D	0.032	m	Diameter of well
r_c	0.016	m	Radius of well

Data Points (from plot):

t*: 0.991 minutes $\Delta H^*/\Delta H_0$: 0.37

Horizontal Hydraulic Conductivity
K = 6.48E-06 m/sec

Hvorslev Hydraulic Conductivity Analysis

Project: Caivan Communities - Conservancy Land
Test Location: BH18-34S
Test: Falling Head
Date: May 7, 2021

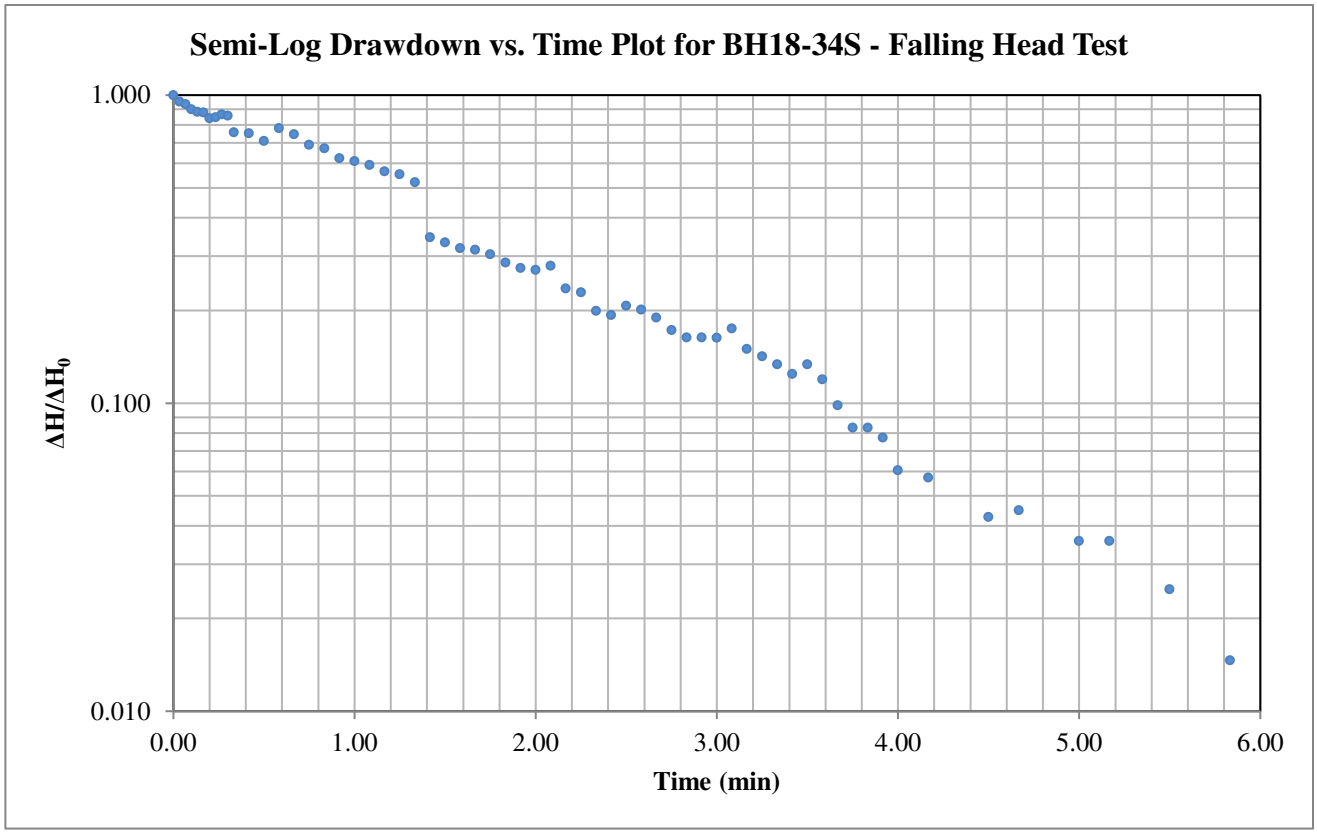

Hvorslev Horizontal Hydraulic Conductivity

$$K = \frac{\pi r_c^2}{F} \frac{1}{t^*} \ln\left(\frac{\Delta H^*}{\Delta H_0}\right)$$

Hvorslev Shape Factor

$$F = \frac{2\pi L}{\ln\left(\frac{2L}{D}\right)}$$

Valid for L>>D

Hvorslev Shape Factor F: 2.07565

Well Parameters:

L	1.5	m	Saturated length of screen or open hole
D	0.032	m	Diameter of well
r_c	0.016	m	Radius of well

Data Points (from plot):

t*: 1.438 minutes $\Delta H^*/\Delta H_0$: 0.37

Horizontal Hydraulic Conductivity
K = 4.47E-06 m/sec

HVORSLEV SLUG TEST ANALYSIS
RISING HEAD TEST 17-11

INTERVAL (metres below ground surface)

Top of Interval = 3.65
Bottom of Interval = 5.17

$$K = \frac{r_c^2}{2L_e} ln\left[\frac{L_e}{2R_e} + \sqrt{1 + \left(\frac{L_e}{2R_e}\right)^2}\right]\left[\frac{ln\left(\frac{h_1}{h_2}\right)}{(t_2 - t_1)}\right]$$ where K = (m/sec)

where:
r_c = casing radius (metres)
R_e = filter pack radius (metres)
L_e = length of screened interval (metres)
t = time (seconds)
h_t = head at time t (metres)

INPUT PARAMETERS	
r_c =	2.5E-02
R_e =	1.0E-01
L_e =	1.5
t_1 =	0
t_2 =	540
h_1/h_0 =	1.00
h_2/h_0 =	0.95

RESULTS

K=	5E-08	m/sec
K=	5E-06	cm/sec

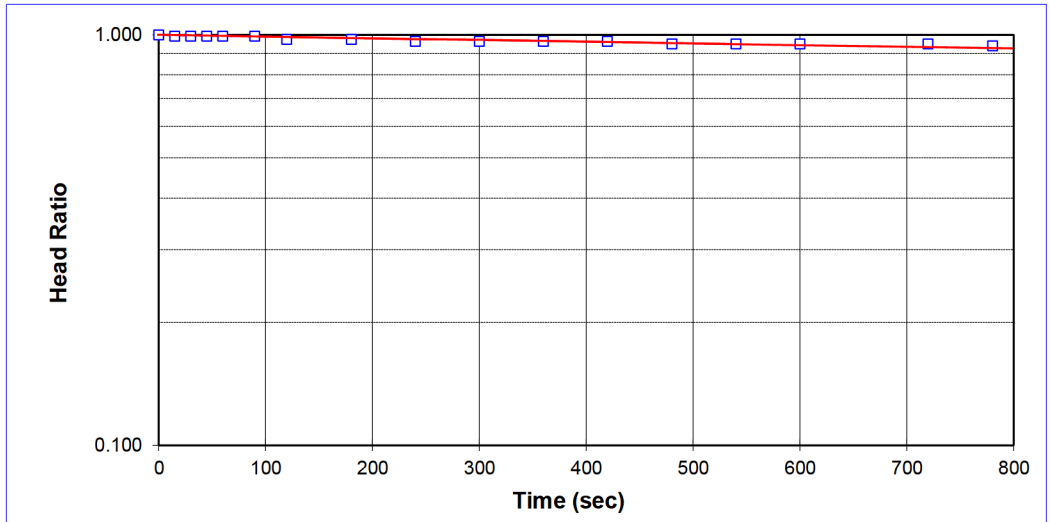

Project Name: Caivan/Barrhaven
Project No.: 1771847
Test Date: 09/06/2017

Analysis By: CWT
Checked By: DH
Analysis Date: 13/06/2017

Golder Associates Ltd.

HVORSLEV SLUG TEST ANALYSIS
RISING HEAD TEST 17-17

INTERVAL (metres below ground surface)

Top of Interval = 1.40
Bottom of Interval = 2.92

$$K = \frac{r_c^2}{2L_e} ln\left[\frac{L_e}{2R_e} + \sqrt{1 + \left(\frac{L_e}{2R_e}\right)^2}\right]\left[\frac{ln\left(\frac{h_1}{h_2}\right)}{(t_2 - t_1)}\right]$$ where K = (m/sec)

where:
r_c = casing radius (metres)
R_e = filter pack radius (metres)
L_e = length of screened interval (metres)
t = time (seconds)
h_t = head at time t (metres)

INPUT PARAMETERS	
r_c =	2.5E-02
R_e =	1.0E-01
L_e =	1.5
t_1 =	0
t_2 =	420
h_1/h_0 =	1.00
h_2/h_0 =	0.01

RESULTS

K=	7E-06	m/sec
K=	7E-04	cm/sec

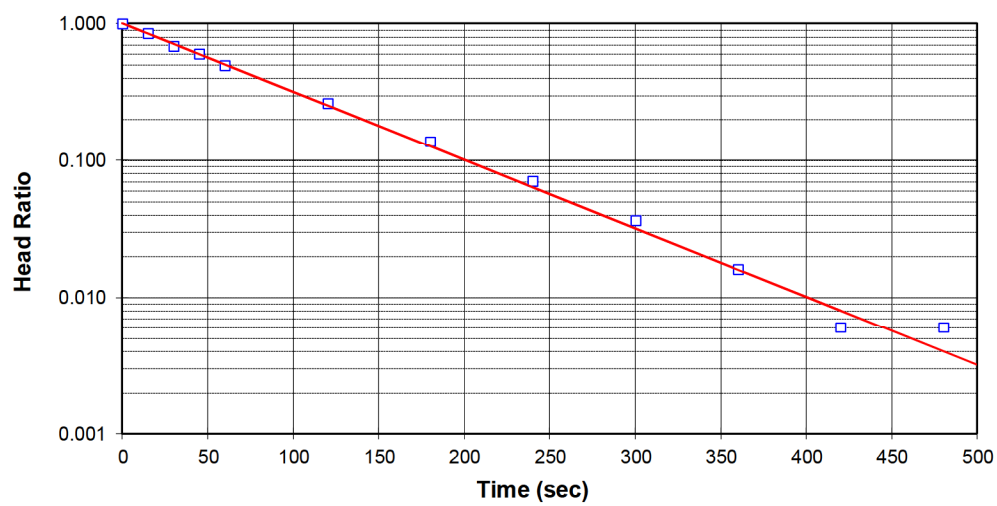

Project Name: Caivan/Barrhaven
Project No.: 1771847
Test Date: 13/04/2017

Analysis By: CWT
Checked By: DH
Analysis Date: 18/04/2017

Golder Associates Ltd.

HVORSLEV SLUG TEST ANALYSIS
RISING HEAD TEST 17-18

INTERVAL (metres below ground surface)

Top of Interval =	**1.40**
Bottom of Interval =	**2.92**

$$K = \frac{r_c^2}{2L_e} \ln\left[\frac{L_e}{2R_e} + \sqrt{1 + \left(\frac{L_e}{2R_e}\right)^2}\right]\left[\frac{\ln\left(\frac{h_1}{h_2}\right)}{(t_2 - t_1)}\right]$$ where K = (m/sec)

where:
r_c = casing radius (metres)
R_e = filter pack radius (metres)
L_e = length of screened interval (metres)
t = time (seconds)
h_t = head at time t (metres)

INPUT PARAMETERS	
r_c =	2.5E-02
R_e =	1.0E-01
L_e =	1.5
t_1 =	0
t_2 =	540
h_1/h_0 =	1.00
h_2/h_0 =	0.10

RESULTS

K=	2E-06	m/sec
K=	2E-04	cm/sec

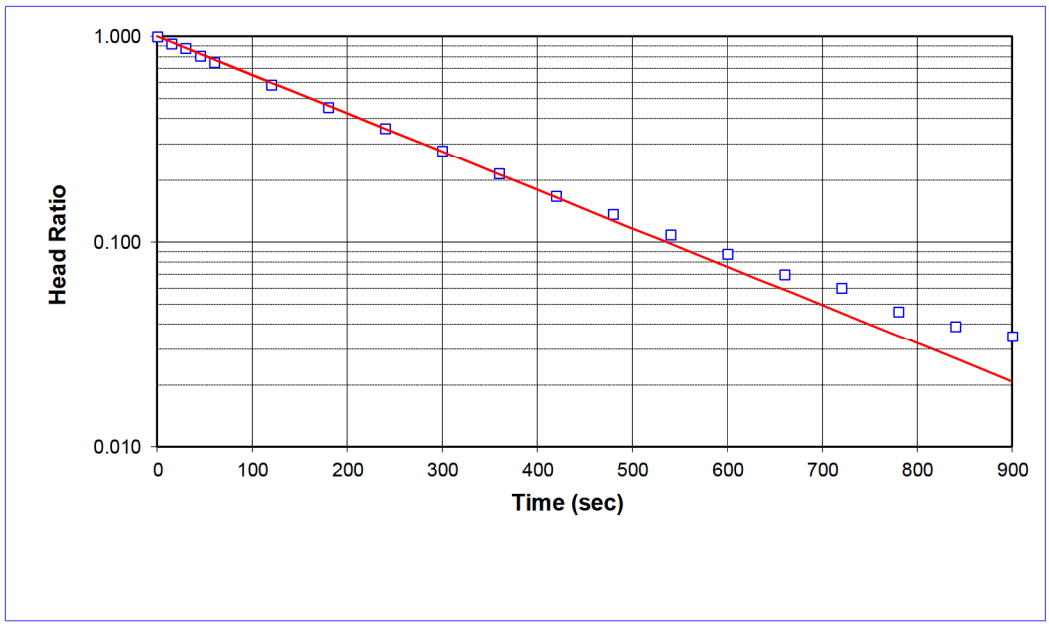

Project Name: Caivan/Barrhaven
Project No.: 1771847
Test Date: 13/04/2017

Analysis By: CWT
Checked By: 0
Analysis Date: 18/04/2017

Golder Associates Ltd.

HVORSLEV SLUG TEST ANALYSIS
RISING HEAD TEST 17-20

INTERVAL (metres below ground surface)

Top of Interval = 1.40
Bottom of Interval = 2.92

$$K = \frac{r_c^2}{2L_e} \ln\left[\frac{L_e}{2R_e} + \sqrt{1 + \left(\frac{L_e}{2R_e}\right)^2}\right]\left[\frac{\ln\left(\frac{h_1}{h_2}\right)}{(t_2 - t_1)}\right]$$ where K = (m/sec)

where:
r_c = casing radius (metres)
R_e = filter pack radius (metres)
L_e = length of screened interval (metres)
t = time (seconds)
h_t = head at time t (metres)

INPUT PARAMETERS	
r_c =	2.5E-02
R_e =	1.0E-01
L_e =	1.5
t_1 =	0
t_2 =	2400
h_1/h_0 =	1.00
h_2/h_0 =	0.08

RESULTS

K=	6E-07	m/sec
K=	6E-05	cm/sec

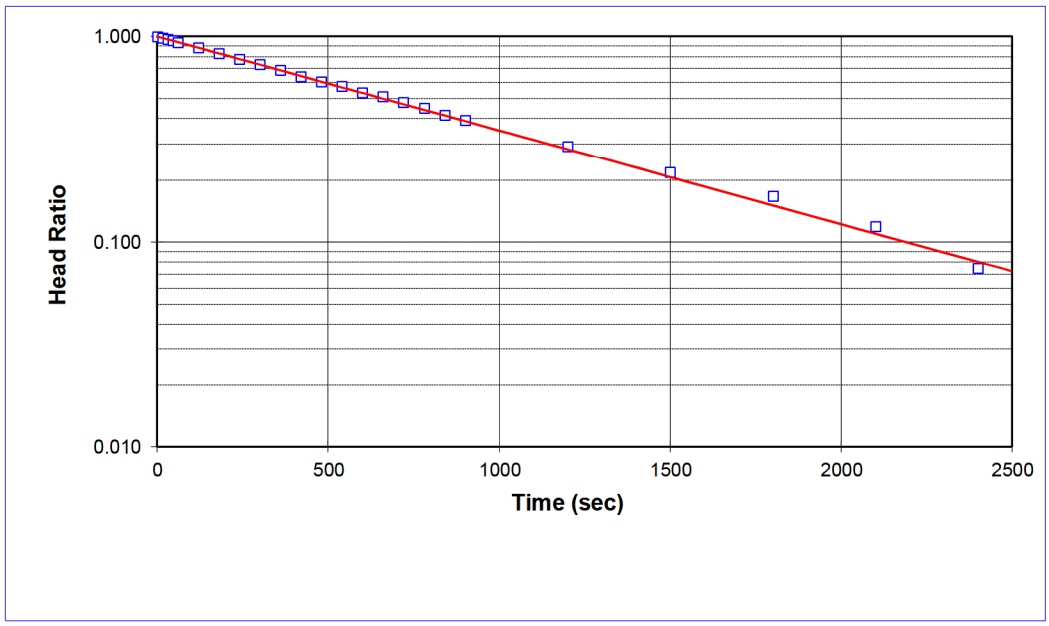

Project Name: Caivan/Barrhaven
Project No.: 1771847
Test Date: 13/04/2017

Analysis By: CWT
Checked By: DH
Analysis Date: 18/04/2017

Golder Associates Ltd.

HVORSLEV SLUG TEST ANALYSIS
RISING HEAD TEST 17-25

INTERVAL (metres below ground surface)

Top of Interval = 1.40
Bottom of Interval = 2.92

$$K = \frac{r_c^2}{2L_e} \ln\left[\frac{L_e}{2R_e} + \sqrt{1 + \left(\frac{L_e}{2R_e}\right)^2}\right]\left[\frac{\ln\left(\frac{h_1}{h_2}\right)}{(t_2 - t_1)}\right]$$ where K = (m/sec)

where:
r_c = casing radius (metres)
R_e = filter pack radius (metres)
L_e = length of screened interval (metres)
t = time (seconds)
h_t = head at time t (metres)

INPUT PARAMETERS	
r_c =	2.5E-02
R_e =	1.0E-01
L_e =	1.5
t_1 =	0
t_2 =	780
h_1/h_0 =	1.00
h_2/h_0 =	0.02

RESULTS

K=	3E-06	m/sec
K=	3E-04	cm/sec

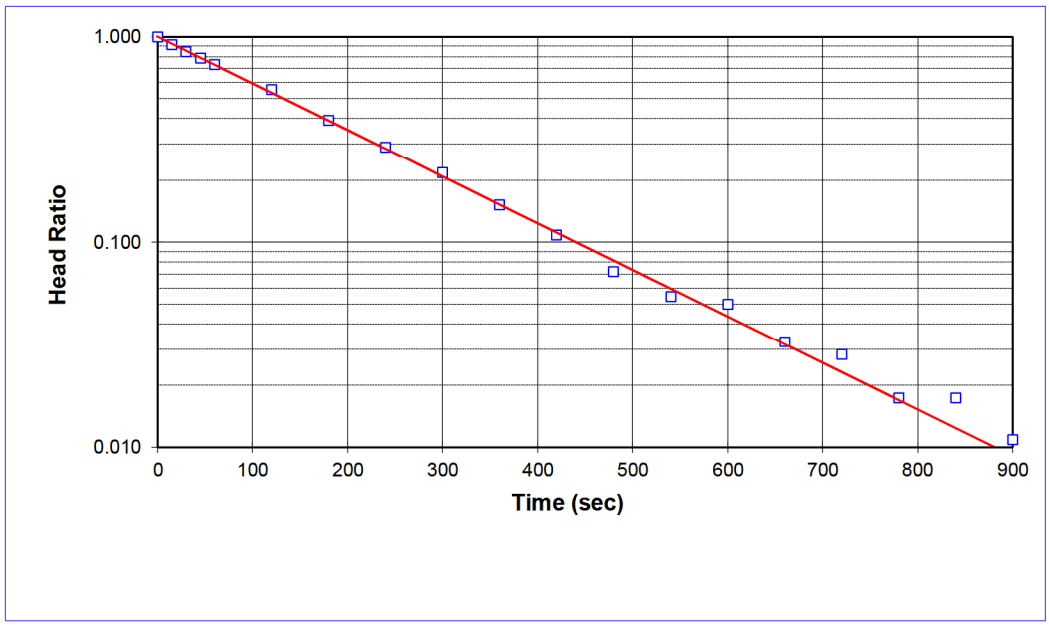

Project Name: Caivan/Barrhaven
Project No.: 1771847
Test Date: 13/04/2017

Analysis By: CWT
Checked By: 0
Analysis Date: 18/04/2017

Golder Associates Ltd.

HVORSLEV SLUG TEST ANALYSIS
RISING HEAD TEST 17-26

INTERVAL (metres below ground surface)

Top of Interval =	**1.40**
Bottom of Interval =	**2.90**

$$K = \frac{r_c^2}{2L_e} \ln\left[\frac{L_e}{2R_e} + \sqrt{1 + \left(\frac{L_e}{2R_e}\right)^2}\right]\left[\frac{\ln\left(\frac{h_1}{h_2}\right)}{(t_2 - t_1)}\right]$$ where K = (m/sec)

where:
r_c = casing radius (metres)
R_e = filter pack radius (metres)
L_e = length of screened interval (metres)
t = time (seconds)
h_t = head at time t (metres)

INPUT PARAMETERS	
r_c =	2.5E-02
R_e =	1.0E-01
L_e =	1.5
t_1 =	0
t_2 =	240
h_1/h_0 =	1.00
h_2/h_0 =	0.04

RESULTS

K=	8E-06	m/sec
K=	8E-04	cm/sec

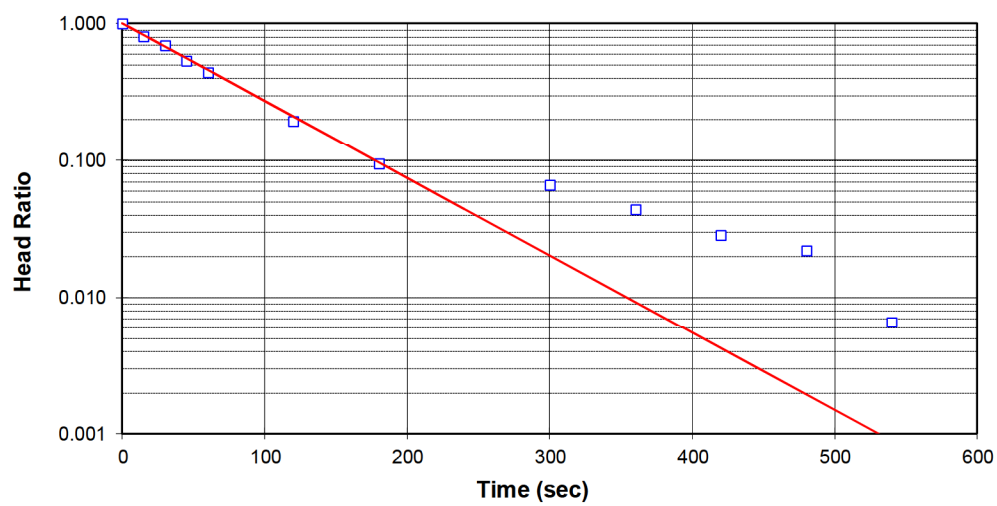

Project Name: Caivan/Barrhaven
Project No.: 1771847
Test Date: 13/04/2017

Analysis By: CWT
Checked By: DH
Analysis Date: 18/04/2017

Golder Associates Ltd.

HVORSLEV SLUG TEST ANALYSIS
RISING HEAD TEST 17-28

INTERVAL (metres below ground surface)

Top of Interval =	**1.40**
Bottom of Interval =	**2.92**

$$K = \frac{r_c^2}{2L_e} \ln\left[\frac{L_e}{2R_e} + \sqrt{1 + \left(\frac{L_e}{2R_e}\right)^2}\right]\left[\frac{\ln\left(\frac{h_1}{h_2}\right)}{(t_2 - t_1)}\right]$$ where K = (m/sec)

where:
r_c = casing radius (metres)
R_e = filter pack radius (metres)
L_e = length of screened interval (metres)
t = time (seconds)
h_t = head at time t (metres)

INPUT PARAMETERS	
r_c =	2.5E-02
R_e =	1.0E-01
L_e =	1.5
t_1 =	0
t_2 =	1500
h_1/h_0 =	1.00
h_2/h_0 =	0.04

RESULTS

K=	1E-06	m/sec
K=	1E-04	cm/sec

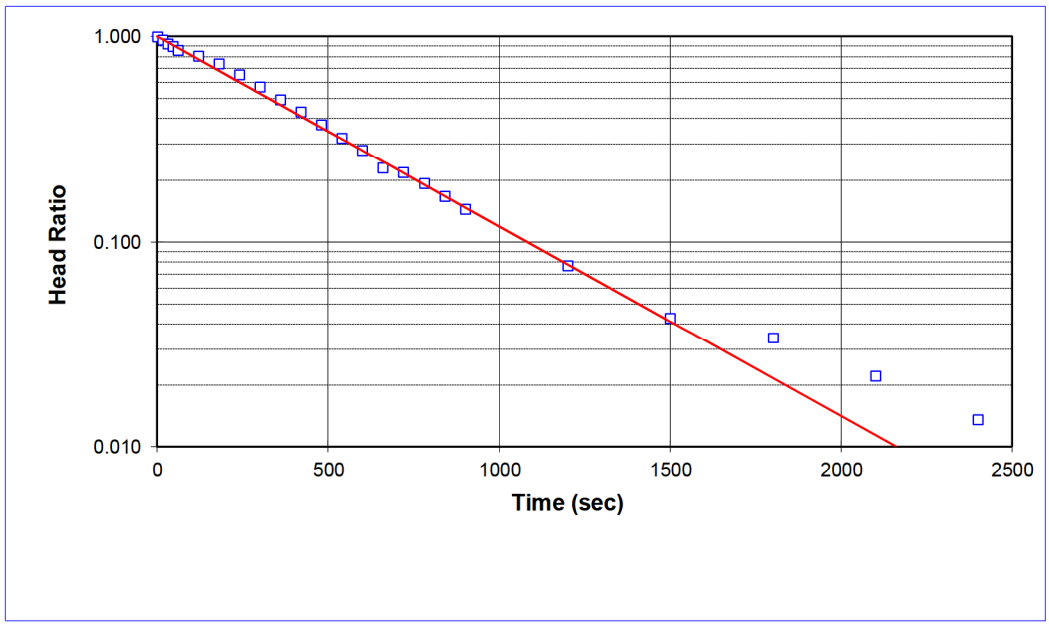

Project Name: Caivan/Barrhaven
Project No.: 1771847
Test Date: 13/04/2017

Analysis By: CWT
Checked By: DH
Analysis Date: 18/04/2017

Golder Associates Ltd.

HVORSLEV SLUG TEST ANALYSIS
RISING HEAD TEST 17-32

INTERVAL (metres below ground surface)

Top of Interval =	**1.40**
Bottom of Interval =	**2.92**

$$K = \frac{r_c^2}{2L_e} \ln\left[\frac{L_e}{2R_e} + \sqrt{1 + \left(\frac{L_e}{2R_e}\right)^2}\right]\left[\frac{\ln\left(\frac{h_1}{h_2}\right)}{(t_2 - t_1)}\right]$$ where K = (m/sec)

where:
r_c = casing radius (metres)
R_e = filter pack radius (metres)
L_e = length of screened interval (metres)
t = time (seconds)
h_t = head at time t (metres)

INPUT PARAMETERS	
r_c =	2.5E-02
R_e =	1.0E-01
L_e =	1.5
t_1 =	0
t_2 =	210
h_1/h_0 =	1.00
h_2/h_0 =	0.10

RESULTS

K=	6E-06	m/sec
K=	6E-04	cm/sec

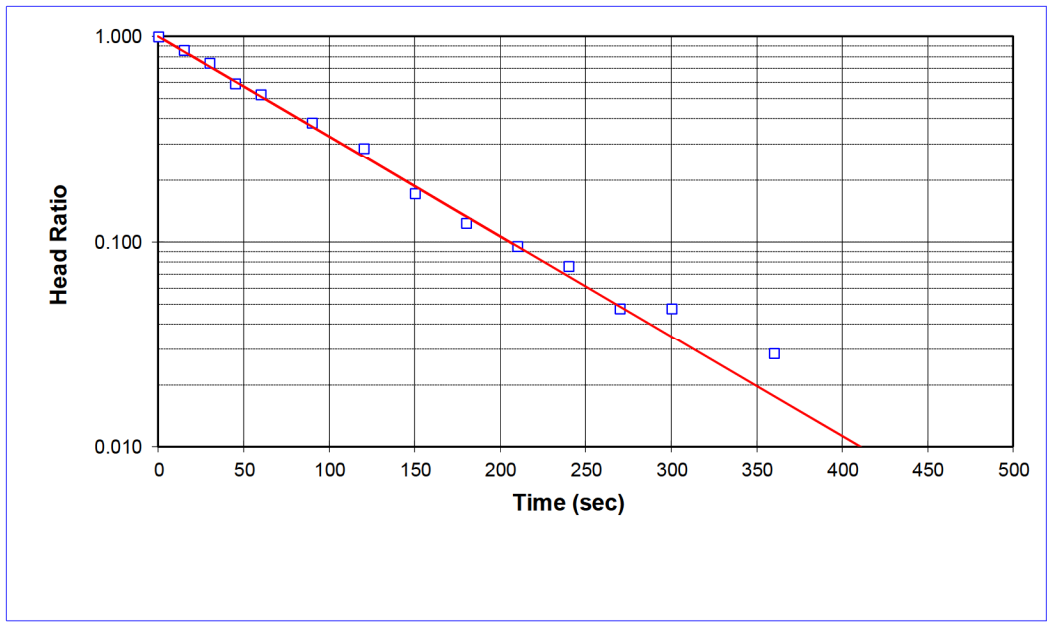

Project Name: Caivan/Barrhaven
Project No.: 1771847
Test Date: 09/06/2017

Analysis By: CWT
Checked By: DH
Analysis Date: 13/06/2017

Golder Associates Ltd.

HVORSLEV SLUG TEST ANALYSIS
RISING HEAD TEST 17-36

INTERVAL (metres below ground surface)

Top of Interval = 1.35
Bottom of Interval = 2.87

$$K = \frac{r_c^2}{2L_e} ln\left[\frac{L_e}{2R_e} + \sqrt{1 + \left(\frac{L_e}{2R_e}\right)^2}\right]\left[\frac{ln\left(\frac{h_1}{h_2}\right)}{(t_2 - t_1)}\right]$$ where K = (m/sec)

where:
r_c = casing radius (metres)
R_e = filter pack radius (metres)
L_e = length of screened interval (metres)
t = time (seconds)
h_t = head at time t (metres)

INPUT PARAMETERS	
r_c =	2.5E-02
R_e =	1.0E-01
L_e =	1.5
t_1 =	0
t_2 =	510
h_1/h_0 =	1.00
h_2/h_0 =	0.26

RESULTS

K=	2E-06	m/sec
K=	2E-04	cm/sec

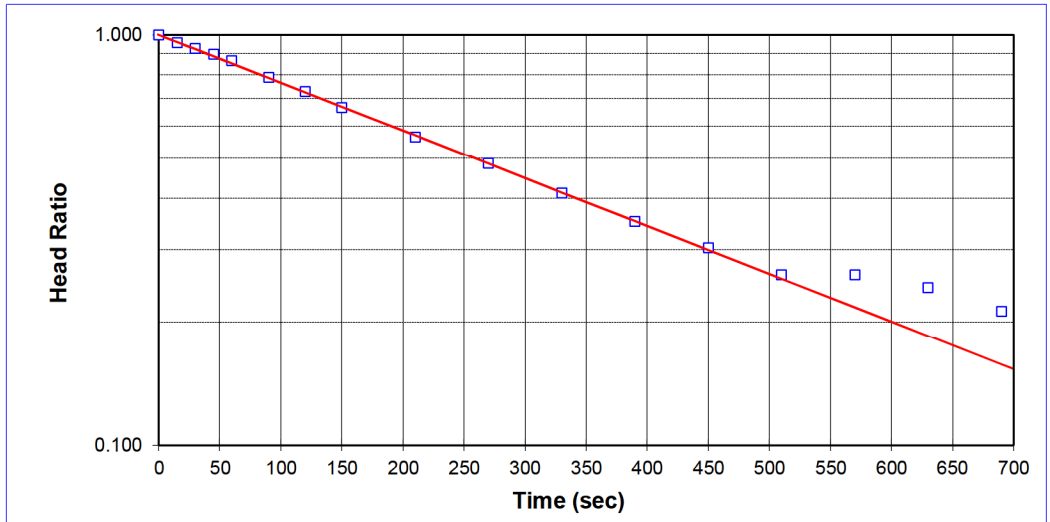

Project Name: Caivan/Barrhaven
Project No.: 1771847
Test Date: 09/06/2017

Analysis By: CWT
Checked By: DH
Analysis Date: 13/06/2017

Golder Associates Ltd.

HVORSLEV SLUG TEST ANALYSIS
RISING HEAD TEST 17-38

INTERVAL (metres below ground surface)

Top of Interval =	**1.40**
Bottom of Interval =	**2.92**

$$K = \frac{r_c^2}{2L_e} \ln\left[\frac{L_e}{2R_e} + \sqrt{1 + \left(\frac{L_e}{2R_e}\right)^2}\right]\left[\frac{\ln\left(\frac{h_1}{h_2}\right)}{(t_2 - t_1)}\right]$$ where K = (m/sec)

where:
r_c = casing radius (metres)
R_e = filter pack radius (metres)
L_e = length of screened interval (metres)
t = time (seconds)
h_t = head at time t (metres)

INPUT PARAMETERS	
r_c =	2.5E-02
R_e =	1.0E-01
L_e =	1.5
t_1 =	0
t_2 =	1500
h_1/h_0 =	1.00
h_2/h_0 =	0.14

RESULTS

K=	8E-07	m/sec
K=	8E-05	cm/sec

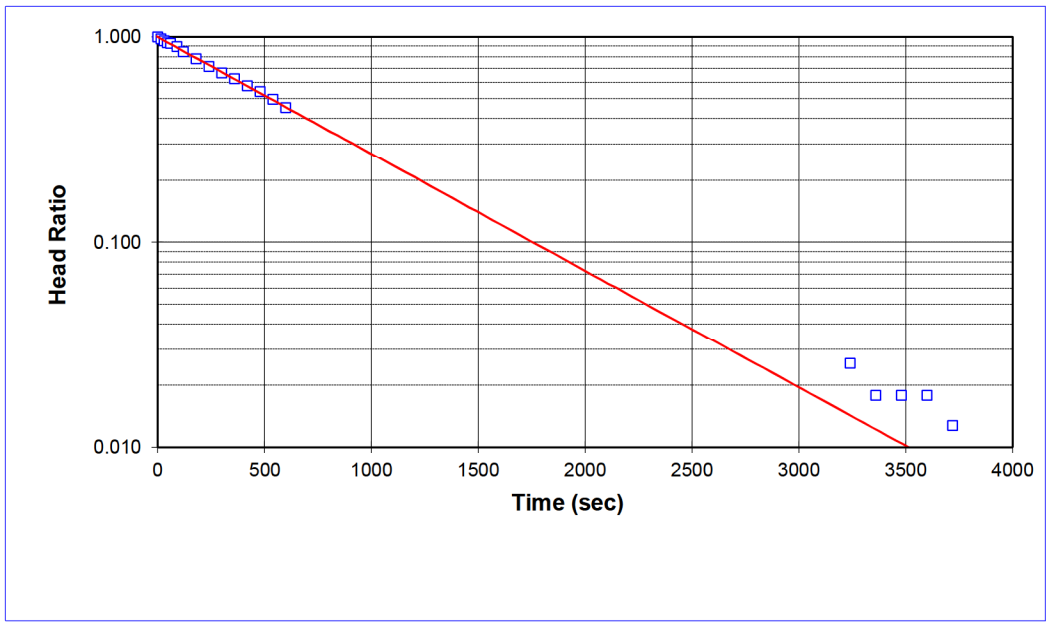

Project Name: Caivan/Barrhaven
Project No.: 1771847
Test Date: 09/06/2017

Analysis By: CWT
Checked By: DH
Analysis Date: 13/06/2017

Golder Associates Ltd.

HVORSLEV SLUG TEST ANALYSIS
RISING HEAD TEST 17-43

INTERVAL (metres below ground surface)

Top of Interval = 1.40
Bottom of Interval = 2.92

$$K = \frac{r_c^2}{2L_e} ln\left[\frac{L_e}{2R_e} + \sqrt{1 + \left(\frac{L_e}{2R_e}\right)^2}\right]\left[\frac{ln\left(\frac{h_1}{h_2}\right)}{(t_2 - t_1)}\right]$$ where K = (m/sec)

where:
r_c = casing radius (metres)
R_e = filter pack radius (metres)
L_e = length of screened interval (metres)
t = time (seconds)
h_t = head at time t (metres)

INPUT PARAMETERS	
r_c =	2.5E-02
R_e =	1.0E-01
L_e =	1.5
t_1 =	0
t_2 =	90
h_1/h_0 =	1.00
h_2/h_0 =	0.08

RESULTS

K=	2E-05	m/sec
K=	2E-03	cm/sec

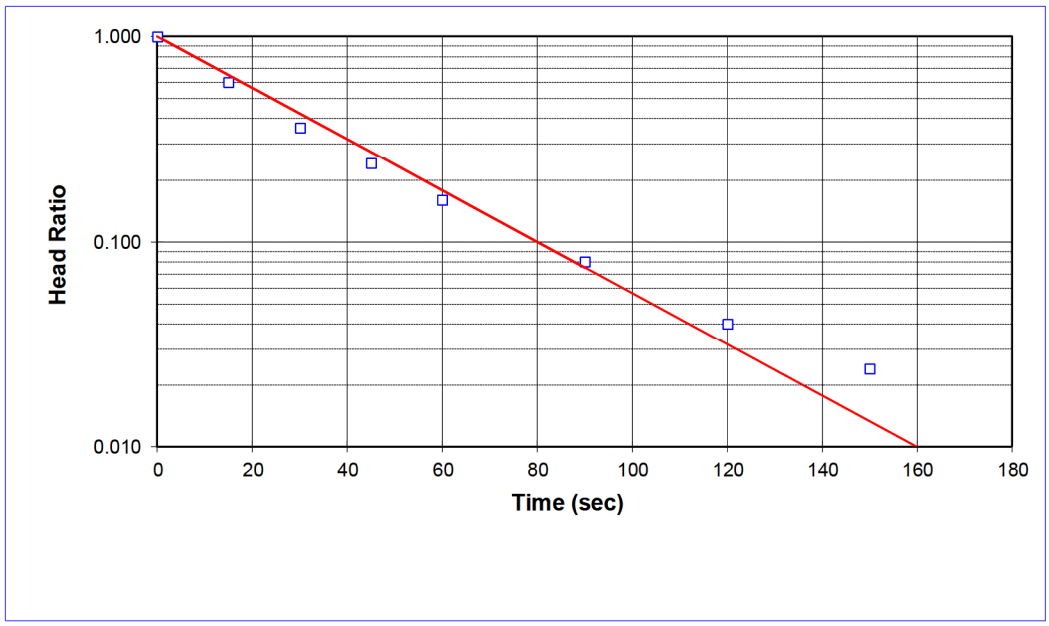

Project Name: Caivan/Barrhaven
Project No.: 1771847
Test Date: 09/06/2017

Analysis By: CWT
Checked By: DH
Analysis Date: 13/06/2017

Golder Associates Ltd.

HVORSLEV SLUG TEST ANALYSIS
RISING HEAD TEST 17-46

INTERVAL (metres below ground surface)

Top of Interval =	**1.40**
Bottom of Interval =	**2.92**

$$K = \frac{r_c^2}{2L_e} \ln\left[\frac{L_e}{2R_e} + \sqrt{1 + \left(\frac{L_e}{2R_e}\right)^2}\right]\left[\frac{\ln\left(\frac{h_1}{h_2}\right)}{(t_2 - t_1)}\right]$$ where K = (m/sec)

where:
r_c = casing radius (metres)
R_e = filter pack radius (metres)
L_e = length of screened interval (metres)
t = time (seconds)
h_t = head at time t (metres)

INPUT PARAMETERS	
r_c =	2.5E-02
R_e =	1.0E-01
L_e =	1.5
t_1 =	0
t_2 =	360
h_1/h_0 =	1.00
h_2/h_0 =	0.06

RESULTS

K=	4E-06	m/sec
K=	4E-04	cm/sec

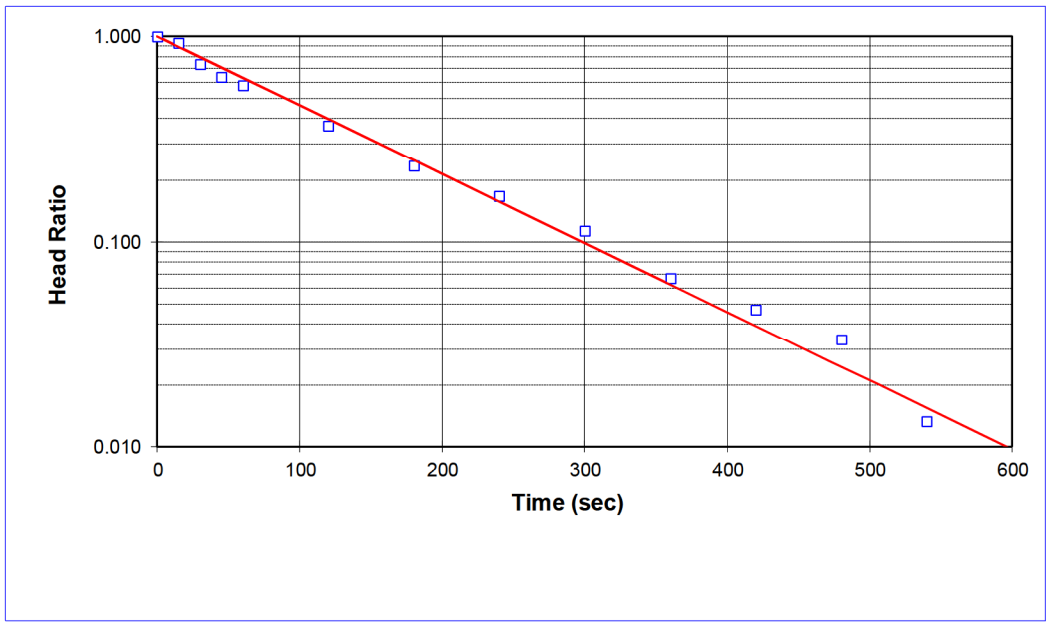

Project Name: Caivan/Barrhaven
Project No.: 1771847
Test Date: 09/06/2017

Analysis By: CWT
Checked By: DH
Analysis Date: 13/06/2017

Golder Associates Ltd.

HVORSLEV SLUG TEST ANALYSIS
RISING HEAD TEST 17-52

INTERVAL (metres below ground surface)

Top of Interval = 1.40
Bottom of Interval = 2.92

$$K = \frac{r_c^2}{2L_e} \ln\left[\frac{L_e}{2R_e} + \sqrt{1 + \left(\frac{L_e}{2R_e}\right)^2}\right]\left[\frac{\ln\left(\frac{h_1}{h_2}\right)}{(t_2 - t_1)}\right]$$ where K = (m/sec)

where:
r_c = casing radius (metres)
R_e = filter pack radius (metres)
L_e = length of screened interval (metres)
t = time (seconds)
h_t = head at time t (metres)

INPUT PARAMETERS	
r_c =	2.5E-02
R_e =	1.0E-01
L_e =	1.5
t_1 =	0
t_2 =	180
h_1/h_0 =	1.00
h_2/h_0 =	0.05

RESULTS

K=	1E-05	m/sec
K=	1E-03	cm/sec

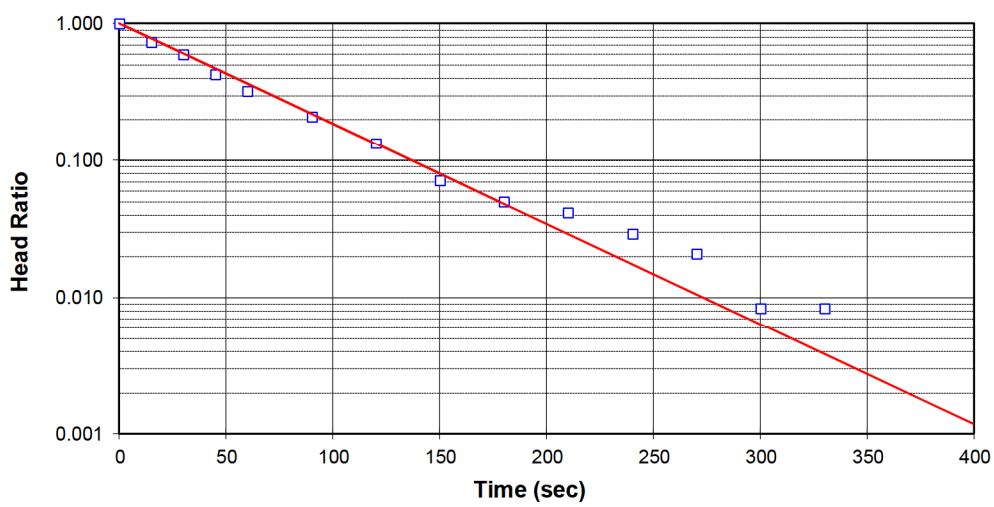

Project Name: Caivan/Barrhaven
Project No.: 1771847
Test Date: 09/06/2017

Analysis By: CWT
Checked By: DH
Analysis Date: 13/06/2017

Golder Associates Ltd.

patersongroup **memorandum**

consulting engineers

re: **Response to City Comments - Hydrogeological Review of Groundwater Conditions**
Proposed Residential Development – Barrhaven Conservancy
Borrisokane Road - Ottawa – Ontario

to: Caivan Communities – **Hugo Lalonde –** Hugo.Lalonde@Caivan.com

date: June 8, 2021

file: PG5036-MEMO.12

Further to your request, Paterson Group (Paterson) reviewed the Rideau Valley Conservation Authority (RVCA) Technical Review Memorandum dated May 13, 2021 for the City of Ottawa (City) File: D07-16-20-0021 for the aforementioned site. This memo will provide a summary of the comments that are to be addressed within this memo followed by a consolidated response to comments. A further consolidation for the future submission may be necessary as requested by the City of Ottawa.

Rideau Valley Conservation Comment Summary

The comments to be addressed within this memo are related to the groundwater elevation and the assertion that the proposed stormwater solution will negatively impact the groundwater table.

The RVCA comments were provided in a commentary fashion and will be referenced based on the page number and section.

Comments

- ❑ Page 3 of 8 – Section A - Sump pumps appear to be necessary around all foundations to continually drain the water table to the storm sewer (not just seasonally high water).

- ❑ Page 3 of 8 – Section A - A buried perforated pipe system is to be installed throughout. Given that the water table is high, it seems that the system is designed to drain the existing and future groundwater table (and recharging water) and maintain the groundwater at the elevation of the pipe's bottom.

- ❑ Page 4 of 8 – Section B.a - To this point, RVCA does not agree with the geotechnical report conclusions that the water table would be two to three metres below ground. The setting, the soil types and the numerous data points (presented in the report) indicate that the water table is at or very near to the original ground surface. RVCA would point out that following filling and grading, a new water table will establish itself within the fill, the elevation of which will depend on the properties of the fill (i.e. washed gravel or silty clay) and the final grading. If there is other monitoring data to indicate all of the original data is suspect, this should be provided.

Reference to soil mottling depth, etc. is not enough to refute so much data and common understanding of water tables in low lying clay plains.

Paterson Consolidated Response

Paterson has reviewed the RVCA comments and has the following information / comments.

Sump Pit

The sump pump installations are necessary at all foundations in compliance with the City of Ottawa Technical Bulletin ISTB-2018-04 – Sewer, Second Edition, October 2012. In the forthcoming Paterson Hydrogeological Report in support of the use of sump pumps for the ongoing phases (previously approved for Phase 1), greater detail will be provided on the requirements listed within the Technical Bulletin.

The sump pump installations are anticipated to have recommendations to place low permeability fill material as backfill around the foundations to further reduce low potential inflows from the native silty clay materials. The sump will be used to direct minor groundwater ingress, that reaches the sump pit, away from the foundation.

Using the proposed elevations of the centreline of roads from preliminary grading completed by David Schaeffer Engineering Limited (DSEL), the underside of footing (USF) values can be estimated. For this development, a 1.8 m reduction in elevation is the estimated elevation that the USF values will be placed. The USF values coincide with the original ground surface elevation or higher, which is considered to be approximately 1.8 to 3.2 m separation to the existing groundwater table.

Groundwater Levels

The groundwater levels on the site were shown to range from 1.8 to 3.2 m based on the desiccated silty clay crust observed within the geotechnical boreholes completed by others. The silty clay crust ranged from 2.3 to 3.7 m depth at the borehole locations. The soil parameters observed would consist of the colour and consistency of the samples. The measured parameters would consist of the moisture content levels of the samples and the apparent shear strength from the Standard Penetration Resistance (SPT) values.

Colour

Soils that are fully saturated are typically a grey colour. The surficial portion of the silty clay deposit is exposed to oxygen and drying occurs. The exposure to the oxygen rich atmosphere allows for oxidation-reduction reactions to occur within the soils. The brown colour of the clay

on site is evidence that a chemical change has occurred within the soil. Dependent upon the constituent minerals in the silty clay, various colour formations can occur.

Consistency

The physical consistency of a desiccated silty clay shows significantly higher stiffness than a fully saturated grey silty clay sample. The consistency is a tactile observation of the strength of the SPT samples.

Moisture Content Measurements

The measured water content values within the brown silty clay crust was measured by others. The East portion of the development ranged from 22 to 50% moisture content for the samples and from 27 to 59% for the West portion of the site based on the lab measurements completed by others. These values are indicative of a silty clay that has undergone historical desiccation. The saturated grey silty clay underlies the brown silty clay crust and will typically exhibit moisture contents in the range of 70 to 100+%. The moisture content of a soil sample can exceed 100% as the equation is based on the ratio of the weight of water contained within the soil pores to the weight of the soil solids. Materials with large numbers of voids have the ability to retain higher moisture contents. If the material has an exposed surface that allows for the loss of water to evapotranspiration, the silty clay will consolidate as the water content is reduced and creates a stiff desiccated crust at ground surface.

Shear Strength

The silty clay soils are sampled through the use of a SPT for stiffer materials. The sampler allows for retrieval of a subsurface sample during geotechnical field programs and provides a correlated strength of the soils based on the recorded blow count of a specific weight to drive the sampler a specific distance. When weaker saturated grey silty clays are encountered, a shear vane is used to determine the strength of the materials, as the SPT will typically sink under its own weight.

The geotechnical program for the East portion of the site by others observed undrained shear strengths of 46 to 96 kPa within the lower weathered crust and 19 to 49 kPa within the grey silty clay. The SPT values within the weathered crust ranged from the weight of the hammer to 10 blows per 0.3 m penetration, while the underlying silty grey clay had measurements of weight of hammer to 1 blow per 0.3 m penetration. A similar trend was observed within the data for the West portion of the site.

Quantitative and Qualitative Review

The shear strength, oxidation, moisture content and physical consistency of the onsite silty clays provide significant evidence of historical desiccation of the upper silty clay deposit. The multiple lines of evidence indicate that the many physical parameters that were measured point toward a groundwater elevation that is consistent with the reported depth of 2 to 3 m below the original ground surface.

Groundwater Monitoring Program

A groundwater monitoring program, to be completed under separate cover, was carried out at the available monitoring wells within the east and west phases of the subject site from April 2020 to April 2021. Each monitoring well was outfitted with an electronic data logger that recorded measurements at 12 hour intervals. The data shows a general trend for the majority of the wells that rain events cause a quick spike in the water levels measured in the monitoring wells within a 12 hour period subsequent to the event. These spikes are inconsistent with well known properties of the silty clay crust and may be indicative of a surficial connection to the well screen. A mark-up of the monitoring data for BH17-38s has been attached to depict the materials and trends. Additionally, winter conditions may direct ponded water to the base of the well due to radiant heat transfer from the sun to the coloured well casing that will in turn melt the surrounding snow/ice. Surficial sheet flow is likely to occur during the spring freshet with the majority of the site containing a shallow frost layer within the silty clay crust that would increase the impermeability of the brown silty clay crust.

The monitoring results have been consistent with similar developments serviced with sump pumps per the City guidelines that are within the surrounding areas. No ongoing issues related to continuous sump pump discharge have been reported to Paterson's knowledge.

Etobicoke System

The Etobicoke System is proposed to be constructed within the ROW of all streets within the proposed subdivision. The vertical alignment of the proposed systems was reviewed based on sanitary and storm trunk profiles provided by DSEL. The base of the Etobicoke System granular material, that provides the filtration, extends to approximately 0.15 m below the base of the storm sewer. The base of the Etobicoke System is considered to be encompassed entirely within the native brown silty clay layer as shown in Figure 1 attached.

The subgrade below the granular filtration material will consist of the native brown silty clay crust that was observed and measured to have physical and mechanical properties that exhibit behaviour associated with a material that is generally found in an unsaturated state. As the material has consistent properties associated with unsaturated materials, the

Etobicoke System is considered to have a construction elevation that would remain above the groundwater table.

Summary

The qualitative and quantitative parameters of the silty clay clearly indicate that the brown silty clay crust has undergone physical changes that are consistent with silty clay that is in a unsaturated condition (ie. Exists above the groundwater table). Based on the observations and measurements completed during the geotechnical field/laboratory and hydrogeological review, the groundwater table is expected to vary from 2 to 3 m below original ground surface. The groundwater elevation will be dependent on the soils encountered at each borehole and will exhibit minor variability.

The review provides multiple lines of evidence that the groundwater is below the original ground surface and the groundwater table will not be intersected by the proposed sump pits / weeping tiles or Etobicoke System

We trust that the current submission meets your immediate requirements.

Best Regards,

Paterson Group Inc.

Michael S. Killam, P.Eng.

LICENSED PROFESSIONAL ENGINEER
08/06/21
M. S. KILLAM
100221103
PROVINCE OF ONTARIO

Attachments:

- BH17-38s – Groundwater Monitoring Levels vs Precipitation Data
- Figure 1 – Paterson Mark-up of DSEL Storm Trunk 9 Profile

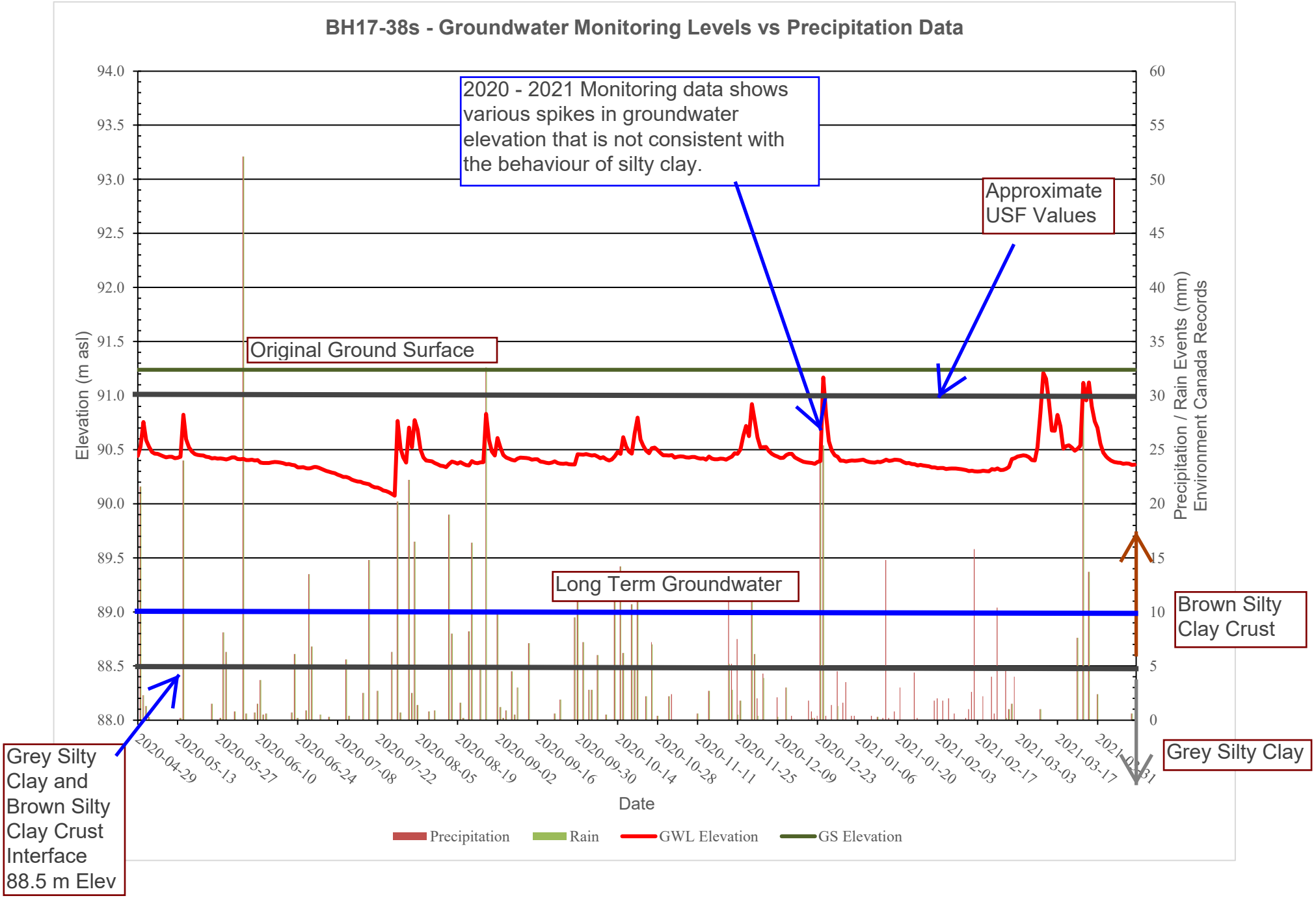
BH17-38s - Groundwater Monitoring Levels vs Precipitation Data
2020 - 2021 Monitoring data shows various spikes in groundwater elevation that is not consistent with the behaviour of silty clay.
Approximate USF Values
Original Ground Surface
Long Term Groundwater
Brown Silty Clay Crust
Grey Silty Clay
Grey Silty Clay and Brown Silty Clay Crust Interface 88.5 m Elev
Elevation (m asl)
Precipitation / Rain Events (mm) Environment Canada Records
Date
Precipitation
Rain
GWL Elevation
GS Elevation

Figure 1: Paterson Mark-up of DSEL Storm Trunk 9 Profile - Located in Proximity to BH17-38

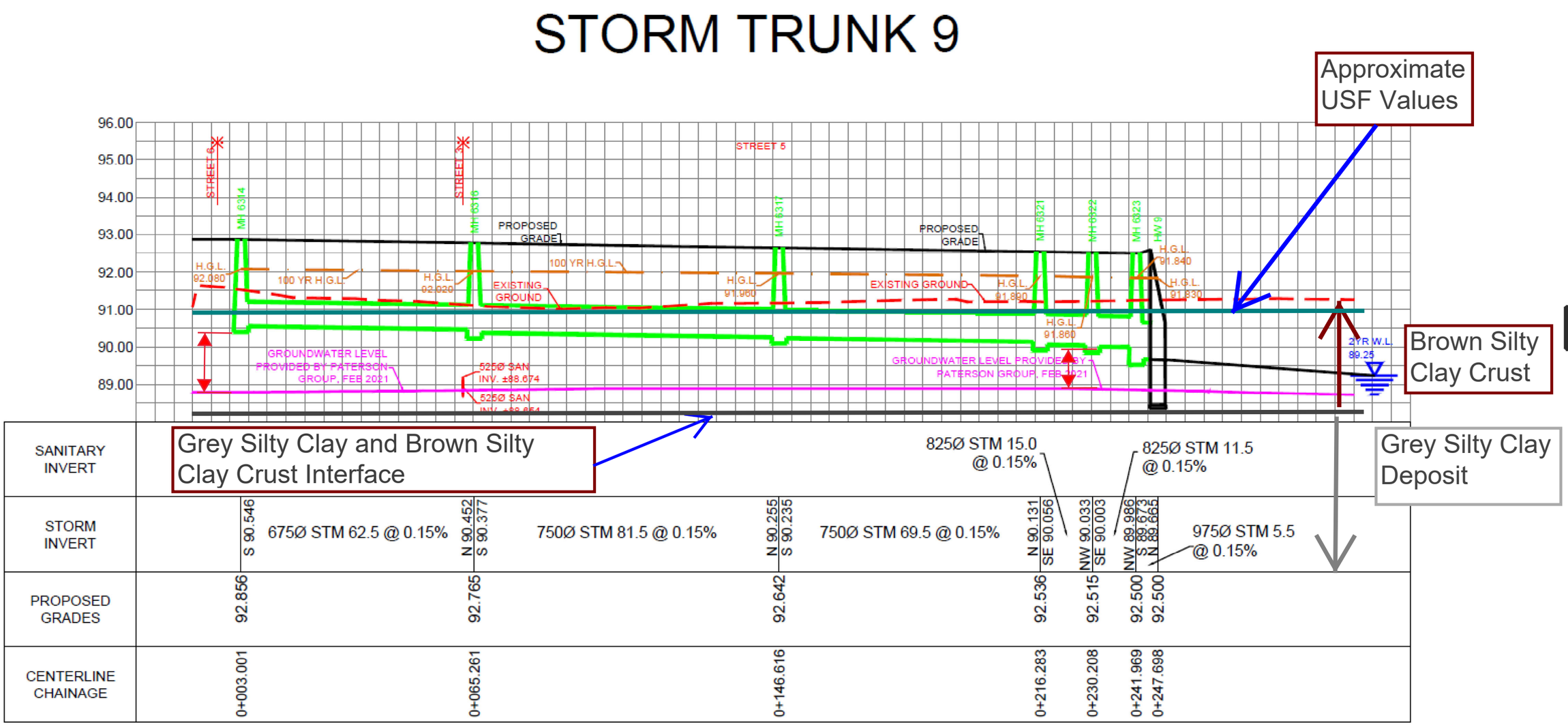

- Etobicoke System is above the long term groundwater elevation.
- Etobicoke System granular layer is approximately 0.15 m below the base of the proposed storm sewer.
- Brown silty clay crust extends approximately 2.3 to 3.7 m below original ground surface across the site.
- Storm Trunk 9 has approximately 0.5 to 1.5 m of separation to the Long Term Groundwater Level.

patersongroup **memorandum**

consulting engineers

re: **Preliminary LID Review**
Proposed Residential Development - Conservancy Lands East
Borrisokane Road - Ottawa

to: Caivan Communities - **Hugo Lalonde** - hugo.lalonde@caivan.com
David Schaeffer Engineering Ltd - **Kevin Murphy** - kmurphy@dsel.ca

date: April 25, 2022

file: PG5036-MEMO.17 Revision 1

Further to your request, Paterson Group (Paterson) has prepared the current memorandum to provide a preliminary review of the proposed Low Impact Development (LID) measures at the aforementioned site. The following memorandum should be read in conjunction with Paterson Report PG5036-1 Revision 3, dated July 15, 2021.

1.0 Background

Based on our correspondence with David Schaeffer Engineering Ltd (DSEL), it is our understanding the proposed LID measures will incorporate a treatment train approach that includes an exfiltration system tied to the catch basins at select locations across the proposed development. It is further understood the invert of the exfiltration system will extend to a depth of 2.0 to 2.2 m from the proposed top of grate elevations. The LID sizing details provided by DSEL has identified a total minimum infiltration volume of 567 m^3 over a total trench length of 3,335 m. As such, a volume of approximately 0.17 m^3 per linear meter has been proposed to be applied to the exfiltration system at the subject site.

2.0 Field Observations

At the time of the field investigation completed by others, the subsurface profile encountered at the test hole locations within subject site generally consisted of topsoil underlain by a silty clay deposit to an observed depth of 9 m below existing ground surface. Glacial till was encountered underlying the silty clay within the southeast corner of the subject site at depths varying from 3.7 to 6.3 m below the existing ground surface.

Based on available geological mapping, bedrock in the area consists of interbedded limestone and dolostone of the Gull River formation with an overburden drift thickness ranging between 5 and 15 m.

Based on the physical parameters that were measured during the geotechnical investigations, the long-term groundwater level is expected between 2 and 3 m depth below existing ground surface. Given our experience with groundwater in Ottawa clays, the seasonal high groundwater table can be conservatively expected 0.5 m above the long-term groundwater table in the pre-development stage. It should also be noted that groundwater levels can fluctuate both seasonally and in conjunction with precipitation events. Therefore, the groundwater levels could vary at the time of construction.

Slug testing completed by Paterson and others yielded hydraulic conductivity values ranging between 5 x 10^{-8} and 2 x 10^{-5} m/sec at the monitoring well locations screened in the silty clay.

3.0 LID Review and Analysis

For the purpose of this preliminary LID review, a representative mounding analysis was carried out based on subsurface conditions at select borehole locations across the subject site, LID trench details provided by DSEL and assumptions summarized in Table 1 below. Paterson also reviewed the following drawings prepared by DSEL as part of our assessment:

- Barrhaven Conservancy East; Phase 2, 3 and Jock River, Details, Project No. 20-1180, Sheet No. 4, dated April 22, 2021.
- Barrhaven Conservancy East; Phase 2, 3 and Jock River, Grading Plan, Project No. 20-1180, Sheet No. 93 to 106, dated April 22, 2021.

Table 1 - LID Parameters for Analysis	
Hydraulic Conductivity of Aquifer (m/sec)	1 x 10^{-7}
Trench Dimensions - Width x Height (m)	1.75 x 0.4
Base of Exfiltration System from T/G (m)	2.2
Void Ratio (Exfiltration System)	0.4
Drawdown Time (hrs)	72
Thickness of Aquifer (m)	15
Specific Yield of Aquifer	0.06
Approximate GW Separation to Exfiltration System (m)	1.5
Frequency of Rain Event (hrs)	72

Under the assumption that precipitation (rain) would be applied for an approximate 8 month period with limited volumes during the remaining 4 months, Paterson has considered 240 days as the period that water is applied to the exfiltration system at 72 hr intervals for the review.

Based on our review, an applied volume of 0.17 m^3 per linear meter to the exfiltration system would be acceptable for the conditions assumed in the analysis. It is recommended that the invert of the exfiltration system be placed a minimum 1.5 m above the long-term groundwater table to ensure optimal infiltration conditions. Furthermore, a permeameter testing program at the invert elevation of the proposed exfiltration system is also recommended prior to finalizing the design.

We trust that this information is satisfactory for your immediate requirements.

Best Regards,

Paterson Group Inc.

PROFESSIONAL GEOSCIENTIST
04/25/2022
NICHOLAS ZULINSKI
PRACTISING MEMBER
2359
ONTARIO

Nicholas Zulinski, P.Geo., géo.

Michael S. Killam, P.Eng.

PATERSON GROUP

memorandum

re: **Geotechnical and Hydrogeological Review – Long-Term Water Levels, Groundwater Conditions and LID Analysis**
Proposed Residential Development – Conservancy Lands Phase 3 and 4
Borrisokane Road – Ottawa, Ontario

to: Caivan Communities – **Hugo Lalonde** – hugo.lalonde@caivan.com
Caivan Communities – **Sue Murphy** – sue.murphy@caivan.com

date: March 6, 2025

file: PG5036-MEMO.44 Revision 2

Further to your request and authorization, Paterson Group (Paterson) prepared the current memorandum to provide a geotechnical and hydrogeological review on long-term water levels, groundwater conditions and LID design specific to areas underlain by clay soils for Phase 3 of the Conservancy residential subdivision. This memorandum should be read in conjunction with the Sump Pump Feasibility Report (Paterson Group Report PG5036-LET.01 Revision 3 dated September 5, 2022) and Paterson Report PG5036-1 Revision 7 dated March 14, 2024. It should be noted that a peer review was recently completed by Aquafor Beech for the proposed LID design and existing groundwater levels on behalf of the City of Ottawa and is questioning Paterson's assertion on the anticipated groundwater levels. This memo is considered to be an overarching response to comments regarding near-surface groundwater levels.

Paterson Group has an extensive history of residential and commercial development in areas underlain by the clay deposits that cover much of the Ottawa area. Further, Paterson has had extensive involvement in development of the nearby residential developments, inclusive of Half Moon Bay and the Meadows, which are located in close proximity to the subject development and are overlying clay deposits. Most importantly, Paterson has had direct involvement with the subject development dating back to 2019. This work includes preparing the geotechnical and hydrogeological reports for the site, completing a feasibility study for the use of sump pumps, completing materials testing and inspection services throughout servicing and housing construction of the development. Photographs taken at the site over a number of years have been appended to the current memorandum demonstrating the absence of groundwater below the proposed and existing Low Impact Development (LID) trenches.

Interpretation of Long-Term Water Levels in Low-Permeability Soils

The unique characteristics of the clay deposit present at the subject site significantly influence the accuracy of pre-development water level readings. As such, long-term water levels at the subdivision were interpreted by Paterson based on several physical parameters, including soil color, measured moisture content, stiffness, and shear strength.

Specifically, Paterson has determined the long-term water level based on observed changes at the interface between the weathered crust and the saturated clay layer. These changes include a transition in soil color from brown to grey, a significant decrease in shear strength and consistency, and a substantial increase in measured moisture content.

Statistical Analysis of Jock River Moodie Drive Gauge Data

A statistical analysis of the Jock River Moodie Drive gauge was completed by JFSA Canada Inc., evaluating average summer flows between 1970 and 2017. This analysis modeled a waterside edge elevation of approximately 88.72 m. Based on this assessment, the long-term water levels, shown by Paterson as contours in the aforementioned Sump Pump Feasibility Study, and appended to the current memorandum are located at an elevation above the waterside edge elevation of the Jock River.

Review of Sump Pump System Performance & Construction Observations

At the time of reporting, over 200 residential dwellings have been constructed within Phase 1 of the development and an additional 200 dwellings are under construction or occupied within Phase 2. Additionally, site servicing has been completed across a large portion of the site.

Paterson has conducted a comprehensive review of the sump pump system installed at each lot and townhouse unit constructed within the development as part of the construction and inspections procedure for developments with sump pumps in clay soils. These inspections were performed to ensure proper system functionality with Paterson manually introducing water into each sump pit, as they were found to be dry at the time of inspection. It is our opinion that if the water table were located at an elevation above our expected levels, these units would be experiencing submerged conditions. Consequently, groundwater would be continuously entering the foundation drainage system at the underside of the footing elevation, triggering the sump pump system. The lack of groundwater observed within the sump pit of the constructed houses supports the groundwater elevations determined by Paterson.

With respect to the proposed LID systems at the site, the invert of the infiltration trenches are generally located within +/- 0.5 m of the underside of footing elevations of the nearby residential dwellings, as shown in the profile drawings prepared by DSEL and appended to the current memorandum. As such, the absence of water within the sump pits of the existing buildings supports that the groundwater is located below the invert elevations of proposed LID system.

In addition to sump pump inspections, Paterson provides materials inspection and testing services during the construction of below-grade structures, including site servicing and building foundations. Despite the clay soil, if excavations had extended significantly below the water table across the subdivision, an intensive and costly groundwater dewatering program would have been necessary. However, even with multiple open trenches and exposed basement foundations, excavation floors have generally remained dry, as shown in the site photos appended to the current memorandum.

Observations from Similar Developments in Ottawa

During the construction of existing residential developments over similar clay deposits in the surrounding area and throughout Ottawa, it was observed that pre-development water levels recorded during monitoring programs were not present in service pipe trenches during pipe installations. Additionally, no water was observed within sump pump chambers constructed in the basements of residential buildings. Sump pump inspections conducted by Paterson at these residences confirmed no groundwater presence in sump pump chambers, which are located well below the reported pre-development water levels. These observations further highlight the limitations of relying solely on pre-development monitoring data to determine the groundwater levels and to evaluate LID effectiveness. Paterson maintains the opinion that groundwater levels recorded in the monitoring wells installed within the clay soils at the subject site do not represent the long-term groundwater level at the site.

Infiltration Testing

In-situ infiltration testing was carried out at the invert elevation of the proposed LID systems at select, undeveloped areas within the subject site to confirm the values used in the design for the proposed development. The field program conducted for the current investigation was completed on February 26, 2025. At that time, four (4) test pits (TP1-25, TP2-25, TP3-25 and TP4-25) were excavated to a maximum depth of 2.4 m bgs. The test pit locations were selected in collaboration with David Schaeffer Engineering Limited (DSEL) and distributed in a manner to provide general coverage of the proposed LID features, taking into consideration site features and underground utilities. The test pits were extended below the frost into thawed soils, and testing was completed with exterior temperatures ranging from approximately 2 to 5 degrees Celsius. As such, despite the testing being conducted during the winter months, the data is considered reliable. The testing locations are shown on Paterson Drawing PG5036-1 – Test Hole Location Plan, appended to the current memorandum.

In-Situ Infiltration Testing

In-situ infiltration testing was conducted using a Pask Constant Head Well Permeameter to estimate infiltration rates of the unsaturated soils at, and below, the approximate invert elevation of the proposed Low Impact Development (LID) systems. Locations were identified based on the current plan/profile drawings prepared by DSEL, appended to the current report.

At approximately 0.3 to 0.6 m above each testing elevation, an 83 mm auger hole was excavated to the desired testing elevation using a Riverside/Bucket auger. Soils from the auger flights were visually inspected and initially classified on-site. The tests were conducted by filling the permeameter reservoir with water and inverting it into the hole, ensuring it was relatively vertical and rested at the bottom of the hole. The water level of the reservoir was monitored at periodic intervals until the rate of fall out of the permeameter reached equilibrium, known as quasi “steady state” flow rate. Quasi “steady state” flow can be considered to have been obtained after measuring 3 to 5 consecutive rate of fall readings with identical values. The values for the steady state rate of fall were recorded for each completed test.

Reference should be made to the ETC Pask Permeameter User Guide and Appendix C of the Credit Valley Conservation Authority and Toronto and Region Conservation Authority Low Impact Development Stormwater Management Planning and Design Guide (2011), appended to the current report.

In-Situ Infiltration Testing Results

Two (2) in-situ infiltration tests were conducted at each test pit location. The field saturated hydraulic conductivity (K_{fs}) and estimated infiltration values for each completed test are presented in Table 1 below.

The K_{fs} values were determined using the Engineering Technologies Canada (ETC) Ltd. reference tables provided in the most recent ETC Pask Permeameter User Guide. The K_{fs} values were converted to unfactored estimated infiltration rates using the approximate relationship described in Appendix C of the Credit Valley Conservation Authority and Toronto and Region Conservation Authority Low Impact Development Stormwater Management Planning and Design Guide (2011).

Based on the methodology for determining design infiltration rates outlined in Appendix C of the aforementioned Stormwater Management Planning and Design Guide, a safety correction factor of 2.5 or 3.5 (based on the ratio of measured infiltration rates at each testing location) was applied to the unfactored infiltration rates.

Table 1 - In-Situ Infiltration Testing Results

Test Location ID	Ground Surface Elevation (m asl)	Testing Elevation (m asl)	LID Invert Elevation (m asl)	Material	K_{fs} (m/sec)	Unfactored Infiltration Rate (mm/hr)	Design Infiltration Rate (mm/hr)	Geometric Mean of Design Infiltration Rates (mm/hr)
TP1-25	92.09	90.77	90.77	Brown Silty Clay	9.7×10^{-7}	46	13	10
		90.27		Brown Silty Clay	3.6×10^{-7}	35		
TP2-25	92.05	90.56	90.26	Brown Silty Clay	2.4×10^{-7}	32	9	
		90.26		Brown Silty Clay	2.0×10^{-7}	30		
TP3-25	92.15	90.76	90.46	Brown Silty Clay	4.0×10^{-7}	36	10	
		90.46		Brown Silty Clay	2.4×10^{-7}	32		
TP4-25	92.86	90.76	N/A	Brown Silty Clay	4.0×10^{-8}	20	8	
		90.46		Brown Silty Clay	8.1×10^{-7}	44		

Based on Paterson's in-situ infiltration testing investigation, K_{fs} values ranged from 4.0×10^{-8} to 9.7×10^{-7} m/sec, while estimated unfactored infiltration rates varied from **20 to 46 mm/hr.** The range of K_{fs} values and estimated unfactored infiltration rates are related to the variability in the soils and degree of desiccation encountered during the field investigation. The above noted K_{fs} values and estimated infiltration rates measured at the test hole locations are generally consistent with similar material Paterson has encountered at other sites as well as published values for those materials. The design infiltration rates ranged from 8 to 13 mm/hr with a geometric mean design infiltration rate of 10 mm/hr.

Conclusion

The water levels recorded in the monitoring wells installed in the clay soils encountered across the subject site should not be relied upon for determining the long-term groundwater level. Based on field observations made throughout the years of subsurface works completed and overseen by Paterson at the subject site, Paterson maintains that the long-term groundwater table is located a depth such that sufficient separation from the invert of the LID systems is viable.

Based on the above testing, the infiltration rates were generally found to be within or marginally exceed the range of infiltration rates typical of brown silty clay soils. Further, the site specific infiltration rates were found to exceed those used in design of the proposed LID systems by DSEL. As such, the range of infiltration rates provided in support of the design by DSEL are considered to be appropriate.

We trust that his information satisfies your requirements.

Best Regards,

Paterson Group Inc.

LICENSED PROFESSIONAL ENGINEER
Mar. 6, 2025
D. J. GILBERT
100116130
PROVINCE OF ONTARIO

Kevin A. Pickard, P.Eng.

Michael Laflamme, P.Geo.

David J. Gilbert, P.Eng.

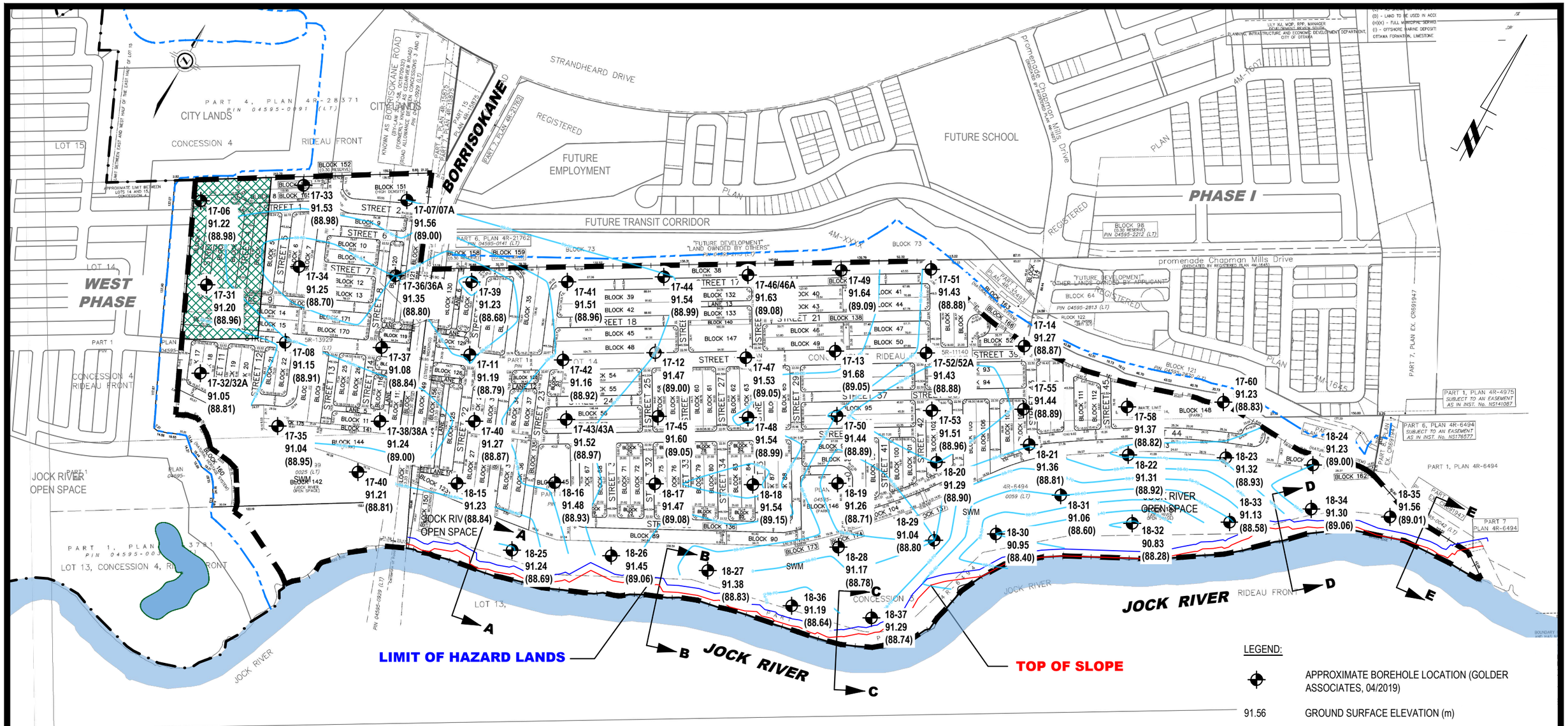

LEGEND:

- APPROXIMATE BOREHOLE LOCATION (GOLDER ASSOCIATES, 04/2019)
- 91.56 GROUND SURFACE ELEVATION (m)
- (89.15) APPROXIMATE LONG-TERM GROUNDWATER TABLE ELEVATION (m)
- SITE CLASS E (REMAINDER OF THE SITE IS CLASS D)
- 88.40 GROUNDWATER CONTOURS (m)

BOREHOLE LOCATIONS WERE SURVEYED BY OTHERS AND ARE REFERENCED TO A GEODETIC DATUM.

patersongroup
consulting engineers

154 Colonnade Road South
Ottawa, Ontario K2E 7J5
Tel: (613) 226-7381 Fax: (613) 226-6344

NO.	REVISIONS	DATE	INITIAL

CAIVAN COMMUNITIES

GEOTECHNICAL INVESTIGATION
PROP. RESIDENTIAL DEVELOPMENT - CONSERVANCY LANDS EAST

OTTAWA, ONTARIO

Title:
APPROXIMATE LONG-TERM GROUNDWATER TABLE PLAN

Scale: 1:6000	Date: 02/2021
Drawn by: MPG	Report No.: PG5036-1
Checked by: SD	Dwg. No.: PG5036-10
Approved by: DJG	Revision No.:

11x17

p:\autocad drawings\geotechnical\pg50xx\pg5036\pg5036-1 thlp east land (rev.02).dwg

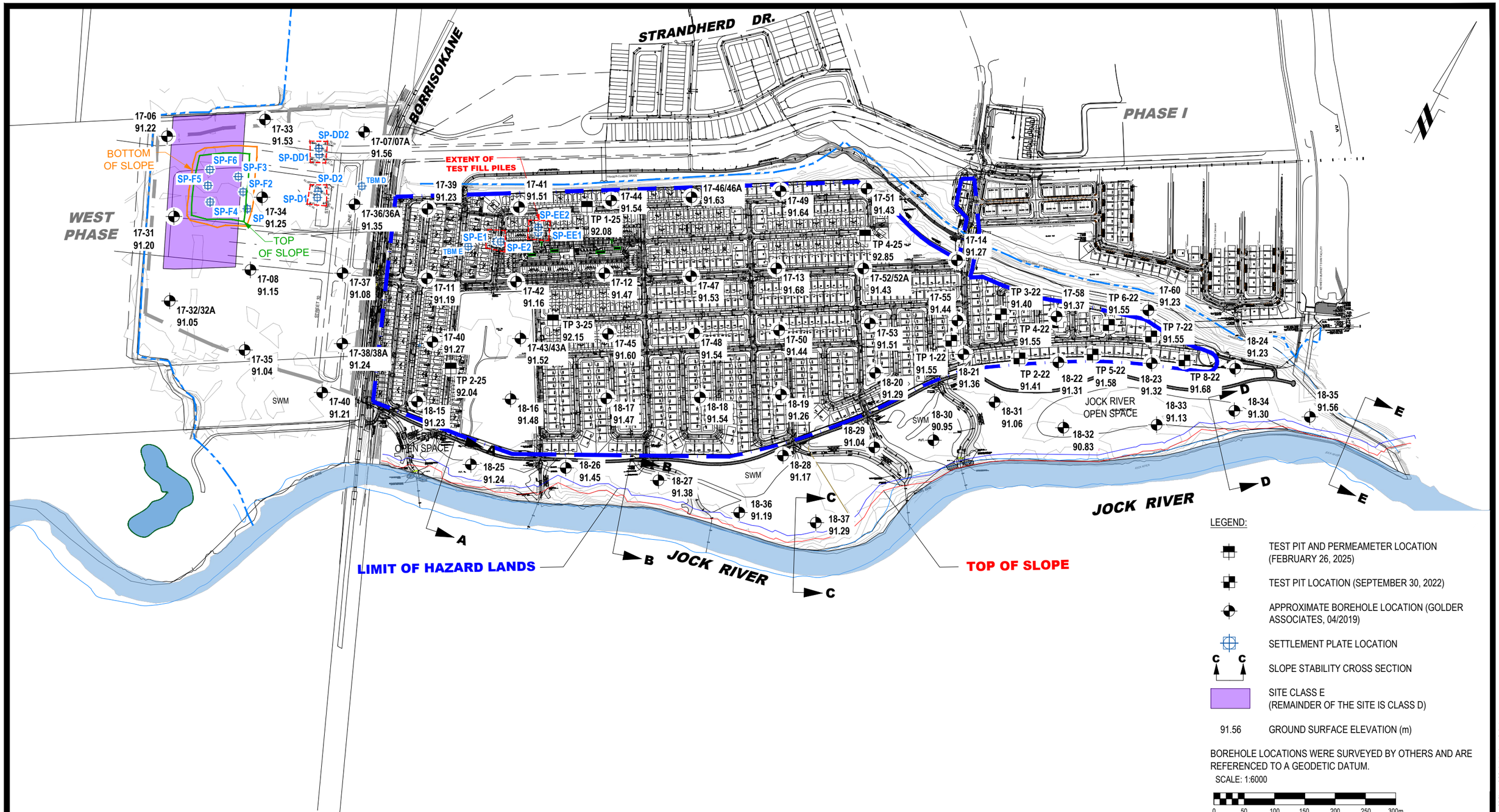

LEGEND:

- TEST PIT AND PERMEAMETER LOCATION (FEBRUARY 26, 2025)
- TEST PIT LOCATION (SEPTEMBER 30, 2022)
- APPROXIMATE BOREHOLE LOCATION (GOLDER ASSOCIATES, 04/2019)
- SETTLEMENT PLATE LOCATION
- C C — SLOPE STABILITY CROSS SECTION
- SITE CLASS E (REMAINDER OF THE SITE IS CLASS D)
- 91.56 — GROUND SURFACE ELEVATION (m)

BOREHOLE LOCATIONS WERE SURVEYED BY OTHERS AND ARE REFERENCED TO A GEODETIC DATUM.

SCALE: 1:6000

0 50 100 150 200 250 300m

PATERSON GROUP
9 AURIGA DRIVE
OTTAWA, ON
K2E 7T9
TEL: (613) 226-7381

NO.	REVISIONS	DATE	INITIAL
7	REVISED CONCEPTUAL PLAN ADDED TEST PIT LOCATION TP 1-25 TO TP 4-25	04/03/2025	KP
6	REVISED CONCEPTUAL PLAN	02/11/2022	KP
5	TP 1-22 - TP 8-22 ADDED TO PLAN	19/10/2022	KP
4	SURCHARGE PILE ADDED TO PLAN SETTLEMENT PLATES SP-F1 - SP-F6 ADDED TO PLAN	01/02/2022	OC
3	REVISED CONCEPTUAL PLAN	14/07/2021	OC

CAIVAN COMMUNITIES

GEOTECHNICAL INVESTIGATION

PROP. RESIDENTIAL DEVELOPMENT - CONSERVANCY LANDS EAST

OTTAWA, ONTARIO

Title:

TEST HOLE LOCATION PLAN

Scale: 1:6000	Date: 09/2019
Drawn by: NFRV	Report No.: PG5036-1
Checked by: OC	Dwg. No.: PG5036-1
Approved by: DJG	Revision No.: 7

p:\autocad drawings\geotechnical\pg50xx\pg5036\pg5036-1 thlp (rev.07).dwg

11x17

Photographs from Site Works 2022

Photo 1: Photo of test pit TP 8-22 completed in September of 2022. The test pit was observed to extend to a depth of 1.0 m below the existing ground surface and was observed be dry and free of groundwater infiltration. It should be noted that the test pit was located approximately 35 m away from BH 18-23, completed by others. The groundwater level recorded in the monitoring well was 0.2 m below ground surface in April 30, 2019.

Photo 2: Photo of test pit TP 10-22 completed in November of 2022. The test pit was observed to extend to a depth of 1.8 m below the existing ground surface and was observed be dry and free of groundwater infiltration.

Photo 3: Preparation of pipe bedding subgrade along Conservancy Drive in October 2022. The servicing trench was observed dry and free of groundwater infiltration.

Photo 3: Preparation of pipe bedding along Anemone Mews in November 2022. The servicing trench was observed dry and free of groundwater infiltration.

Photo 3: Photo taken during preparation of the footing pour at a residential dwelling located along now-deleveoped Conservancy Drive in May, 2023. The ground surface was observed to be dry at the base of the excavation and along the sidewalls.

Photo 4: Photo taken during preparation of the basement subgrade at a residential dwelling located along now-deleveoped Peninsula Road in October, 2023. The ground surface was observed to be dry at the base of the excavation and along the sidewalls.

Photo 5: Photo taken during preparation of multiple basement subgrades along the now-deleveoped Peninsula Road in April, 2023. The ground surface was observed to be dry at the base of the excavation and along the sidewalls.

Photo 6: Photo taken during preparation of the basement subgrade at a residential dwelling located along now-deleveoped Peninsula Road in October, 2023. The ground surface was observed to be dry at the base of the excavation and along the sidewalls.

Photo 7: Photo taken during preparation of the basement subgrade at a Block 269 located along Les Emmerson Drive in February, 2025. The ground surface was observed to be dry at the base of the excavation and along the sidewalls.

Photo 8: Photo taken of open test pit comlpeted during the infiltration testing program in February 2025. The test pit was excavated to the approximate invert elevation of the porposed LID system. The base of the excavation was observed to be dry and no groundwater infilation was observed along the sidewalls.

LES EMMERSON DRIVE (N)

2

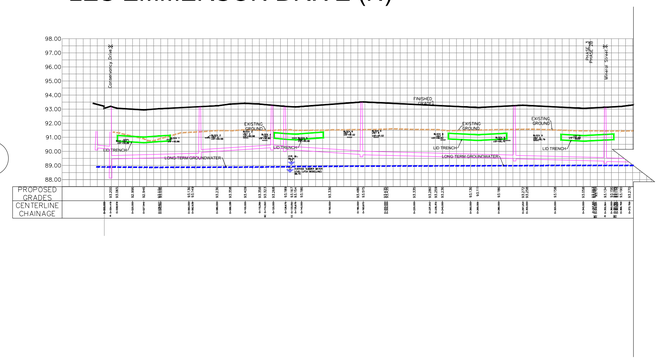

POLLINATION PLACE

17

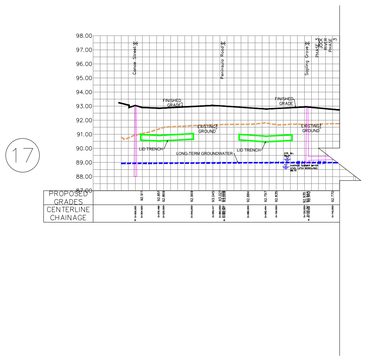

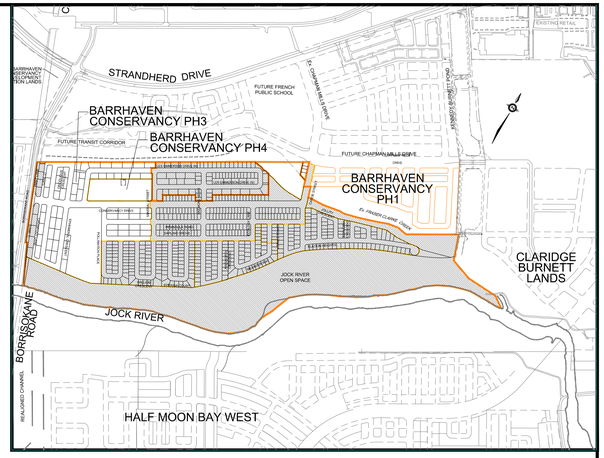

PENINSULA ROAD

3

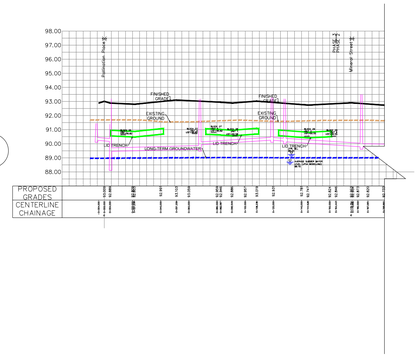

DECIDUOUS CRESCENT

23

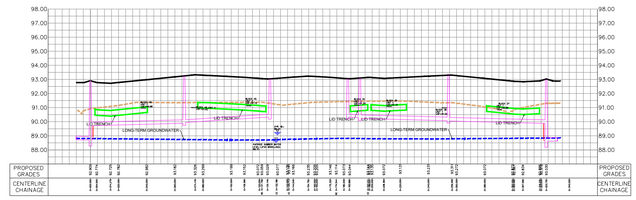

SAPLING GROVE

4

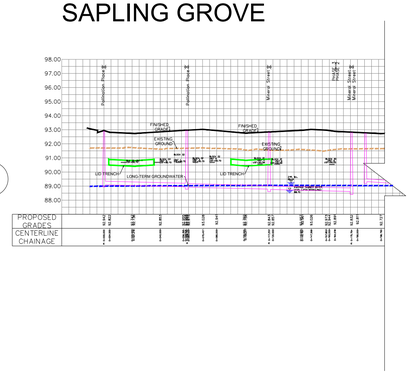

CROWFOOT LANE (LANE 1)

24

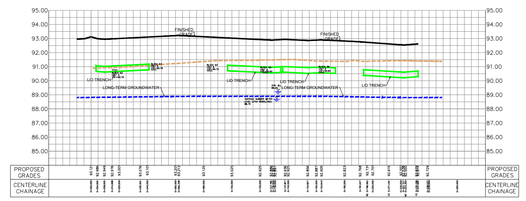

EPHEMERAL CRESCENT

15

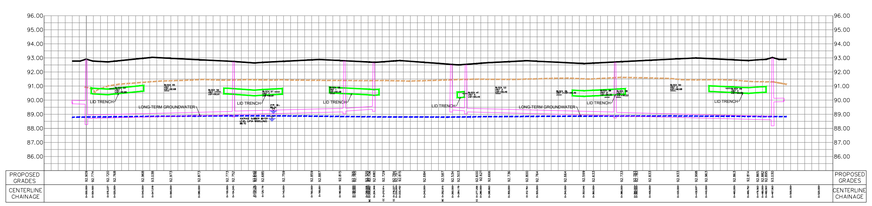

AMBIT LANE (LANE 2)

25

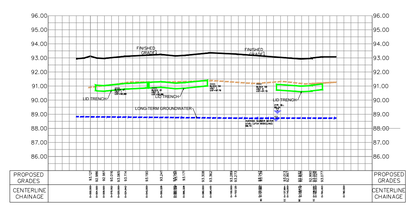

LEGEND

- FINISHED GRADE
- EXISTING GROUND
- BLOCK USF
- LID INFILTRATION TRENCH (2.33m DEEP)
- LONG-TERM GROUNDWATER
- WATER LEVEL

DSEL
120 Iber Road, Unit 103
Stittsville, ON K2S 1E9
Tel. (613) 836-0856
Fax. (613) 836-7183
www.DSEL.ca

CITY OF OTTAWA

LID INFILTRATION TRENCH
PROFILE PLAN
CONSERVANCY EAST PHASE 3

SCALE:	H=1:2000 V=1:200	PROJECT No.:	20-1180
DATE:	FEBRUARY 2025	DRAWING:	1

USER GUIDE

ETC PASK (CONSTANT HEAD WELL) PERMEAMETER FOR IN-SITU MEASUREMENT OF FIELD SATURATED HYDRAULIC CONDUCTIVITY OF SOILS

1-16 Myrtle St., Stratford, PE
Canada C1B 2W2
Toll Free 1-888-747-SOIL (7645)

Updated July 2018

Table of Contents

Index of Tables

Index of Figures

Appendices

Appendix A
Field Permeability Test Example
Example Field Permeability Test Data Sheet

Appendix B
Procedure to Verify Integrity of Permeameter Seals
Warranty Information

Disclaimer:

This guide was prepared by Engineering Technologies Canada Ltd. (ETC) using information compiled from a number of published sources and from our professional experience.

While ETC has taken care to include recommendations and technical guidance which are based on currently accepted practice, any use which a third party makes of this guide, or any reliance on or decisions to be based on it, are the responsibility of such third parties.

ETC will accept no damages, if any, suffered by any third party as a result of decisions made or actions based on the information contained herein.

1 INTRODUCTION AND BACKGROUND

Saturated hydraulic conductivity, Ks, is a measure of the "ease" with which water flows through a permeable material such as soil. The higher the Ks value, the greater the water flow rate for a given hydraulic gradient. In-situ methods that infiltrate the water into unsaturated soil do not measure Ks, but rather a reduced "field-saturated" hydraulic conductivity, Kfs, because of air entrapment during the infiltration process (Reynolds, 1993). As noted in Reynolds (1993) and elsewhere, Kfs can be less than or equal to half of Ks due to partial blocking of soil pores by air bubbles. In the design of on-site sewage disposal fields, Kfs is preferred over Ks because drainage through the soil should be designed to occur at less than complete soil saturation.

2 CONSTANT HEAD WELL PERMEAMETER

In-situ measurement of Kfs can be achieved using the "Constant Head Well Permeameter" (CHWP) method (Reynolds, 1993; Elrick and Reynolds, 1986). The CHWP method is based on the observation that when a constant height or "head" of water is ponded in a borehole or "well" augured into unsaturated soil, a "bulb" of *field-saturated* soil is gradually established around the base of the well (see Fig. 3 in Elrick et al., 1989 and associated discussion).

By “field saturated” we mean that the bulb in not truly saturated, but contains a certain amount of air that is entrapped or encapsulated by the infiltrating water (Constantz et al., 1988). As this field saturated bulb becomes established, the flow of water out of the well and into the soil approaches a ***quasi steady flow rate***. Once this quasi steady flow rate is attained, the Kfs of the soil surrounding the well can be determined using the flow rate, the radius of the well, and the head of ponded water in the well.

The CHWP method represents an improvement over previous borehole techniques (such as the Glover analysis) by addressing **all three components of borehole flow**, namely:

1) flow due to the hydrostatic pressure of the ponded water,
2) gravity-driven infiltration out through the base of the test hole, and
3) infiltration due to the capillary suction or “capillarity” of the surrounding unsaturated soil.

The *field saturated hydraulic conductivity*, Kfs, determined using the CHWP technique, is a much more scientifically and technically sound indicator of soil permeability than the outdated percolation test (PT). Kfs testing controls for variables that can substantially affect the PT such as: pit/borehole dimensions, depth of water ponding, soil capillary properties, and background soil moisture content at the time of the test.

2.1 Calculating Kfs

The calculations presented here are based on the work of W.D. Reynolds and D.E. Elrick formerly of the University of Guelph, Ontario, Canada. As with any measurement method, the assumptions and procedures involved with the CHWP technique should be understood before it is used as a field assessment procedure. Various well permeameter analyses have been

developed, including single-head, two-head and multiple head procedures. In-depth reviews and descriptions of the CHWP method can be found in Elrick and Reynolds (1986, 1992a,b); Reynolds (1993); Bagarello et al., (1999); and elsewhere. This user guide outlines the "**extended single-head"** analysis described by Reynolds (2008) and Reynolds et al (1992).

The ETC Pask Permeameter is a convenient and easy to use apparatus for ponding a constant head of water in a well, and simultaneously measuring the flow into the soil. The key dimensions and attributes of the CHWP are represented by Figure 1. An appropriately placed air-inlet hole in the permeameter outflow tube establishes and maintains the desired water ponding head (H) in the well. Measuring the rate of fall (R) of the water level in the permeameter reservoir and reservoir cross-sectional area (X) allows determination of *quasi steady water flow rate* (Q) into the soil (i.e Q = XR). Kfs is then calculated using Equation 1 (Reynolds, 1993):

$$\mathbf{Kfs = CQ / [2\pi H^2 + C\pi a^2 + (2\pi H/\alpha*)]} \qquad \textbf{(Eq. 1)}$$

where *C* is a *shape factor* selected from Figure 2, *a* is the well radius, and α* is a parameter visually estimated from soil texture-structure (capillarity) categories in Table 2.1.

Table 2.1: Texture – Structure Categories for Visual Estimation of α*

TEXTURE – STRUCTURE CATEGORY	Soil Capillarity Category	α* (cm^{-1})
Coarse and gravelly sands; may also include some highly structured soils with large cracks and /or macropores.	Weak	0.36
Most structured and medium textured materials; including structured clayey and loamy soils, as well as unstructured medium single-grain sands. This category is generally the first choice for most soils.	Moderate	0.12
Porous materials that are both fine textured and massive; including unstructured clayey and silty soils, as well as very fine to fine structureless sandy materials.	Strong	0.04
Compacted, structureless, clayey materials such as landfill caps and liners, lacustrine or marine sediments.	Very Strong	0.01

Source: Adapted from Reynolds, W.D., (2008) and Reynolds et al (2015).

It should also be noted that, strictly speaking, the C-value curves in Figure 2 and the α* values in Table 2.1 apply for soils that are at ***field capacity or dryer***, and when the wetting front from the well hole does not appear on the soil surface (Elrick and Reynolds, 1986).

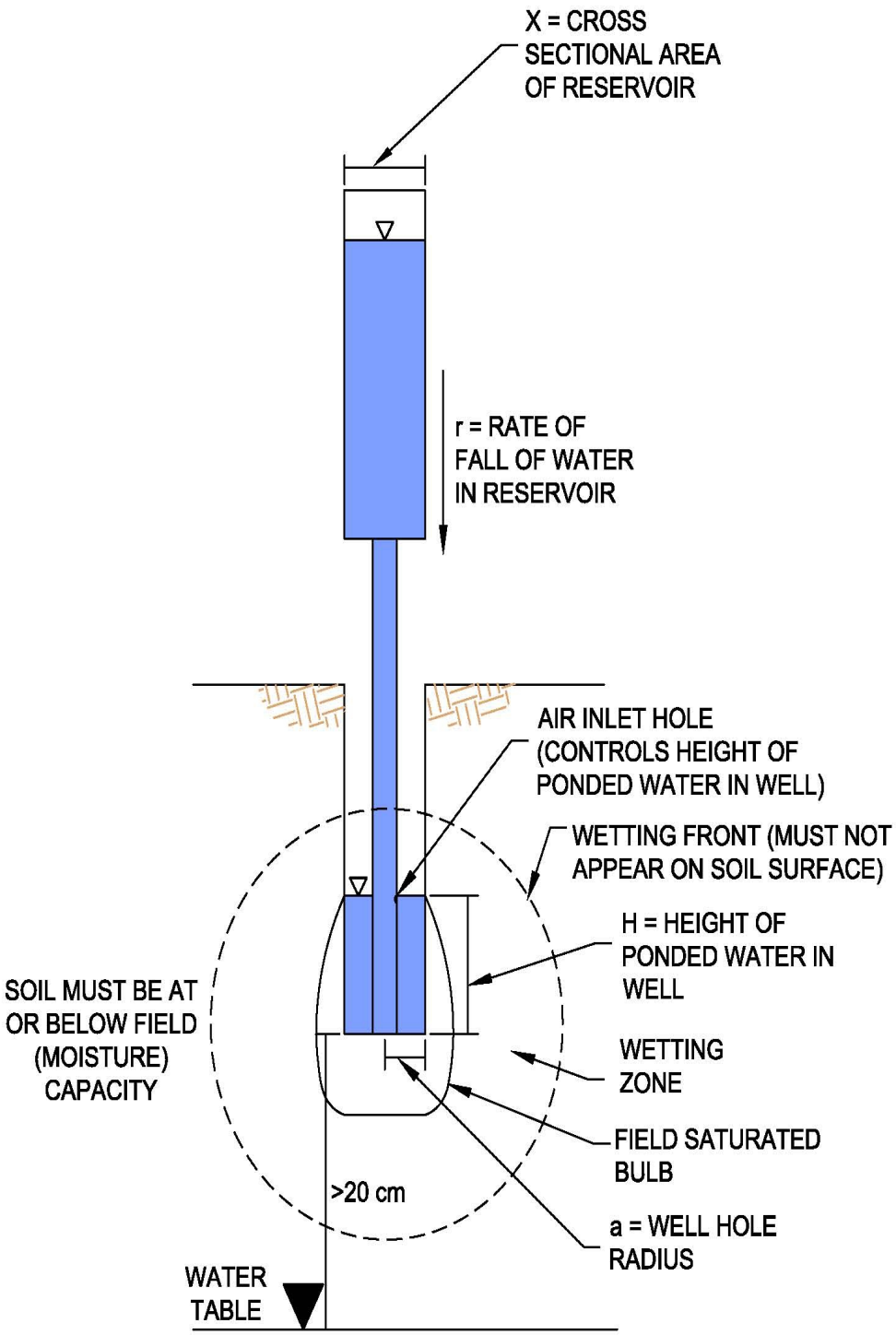

Figure 1: Constant Head Well Permeameter

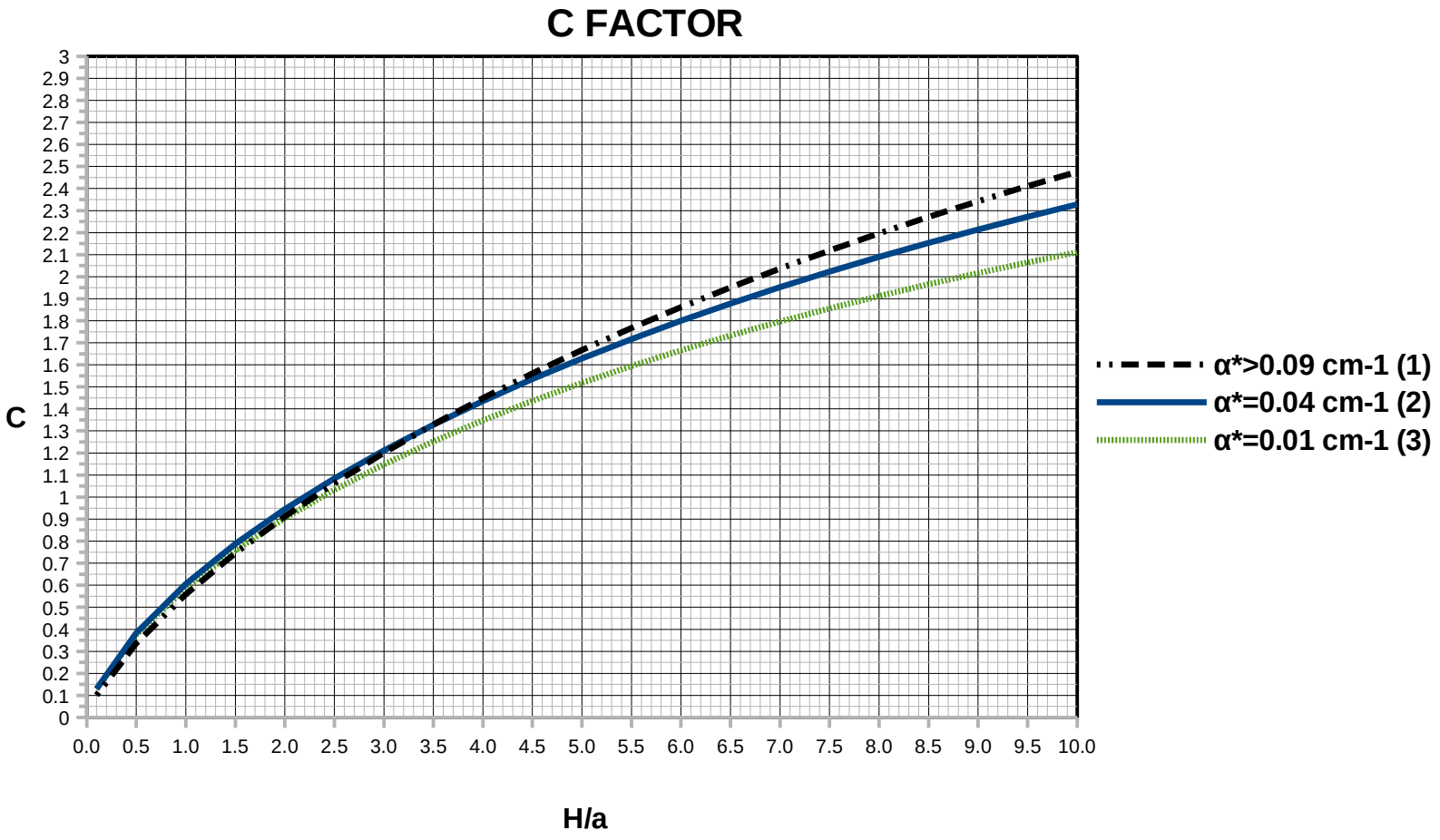

Figure 2: C Factor Chart, Adapted from Reynolds (2008)

2.2 Calculation Summary for Determining Kfs

2.2.1 Calculate Kfs from first principles

To calculate Kfs from first principles, you will need the following information:

a – well hole radius(cm)
H - height of air inlet hole from bottom of the test hole (cm, typically 15cm for ETC Pask Permeameters)
C - from C Factor graph (Figure 2) (unitless)
α* - visually estimated using soil structure/texture categories in Table 2.1 (cm^{-1})
X - cross-sectional area of permeameter reservoir (cm^2)
R – quasi steady state (constant) rate of fall of water in permeameter reservoir (cm/min)

Calculate the rate of discharge into the well hole using Q=X R (cm^3/min); where

X = 53.46cm^2 for the ETC **Standard** Pask Permeameter
X = 12.80cm^2 for the ETC **Slow Soils** Pask Permeameter

Calculate Kfs using **Equation 1**:

$$\mathbf{Kfs = CQ / [2\pi H^2 + C\pi a^2 + (2\pi H/\alpha^*)]}$$

Refer to section 3.4.1 for a worked example showing how to calculate Kfs from first principles.

2.2.2 Determine Kfs using ETC Quick Field Reference Tables

Alternatively, *Quick Field Reference Tables* have been prepared by ETC for the specific permeameter characteristics and typical well hole diameter (8.3cm) produced by the 7cm (2-3/4") AMS Riverside auger supplied with our kit. The tables give Kfs for various rates of fall (R) and α* values. Alternative tables are provided for the Slow Soils Permeameter and a well hole diameter of 8.3cm.

CAUTION: The *Quick Field Reference Tables* should not be used with other constant head permeameters or when the well hole diameter is significantly different than indicated above. Calculate Kfs from first principles using Equation 1 instead.

Custom *Quick Field Reference Tables* may be ordered from Dynamic Monitors for alternative H values and well hole diameters.

Refer to section 3.4.2 for a worked example showing how to determine Kfs using the *Quick Field Reference Tables*.

2.3 Effects of Temperature on Results

The temperature of the water moving through the soil can have a significant effect on the measured Kfs because of the different viscosities of water at different temperatures. Warm water will flow through soil easier than cold water. Therefore, depending on test and design operating temperatures, it may be necessary to adjust the measured Kfs to get permeability that is more representative of operating conditions. This adjusted value (Ka) can be calculated by multiplying Kfs by a *temperature correction factor*.

The temperature correction factor is equal to the viscosity of water at the test conditions temperature divided by the viscosity of water for the expected system (e.g. septic disposal field or subsurface stormwater infiltration system) operating temperature.

Calculate the adjusted **Ka** value using Equation 2.

$$\mathbf{Ka = Kfs \times \mu_k/\mu_a} \qquad \textbf{(Eq. 2)}$$

where: Ka = adjusted permeability for design temperature conditions
Kfs = calculated permeability from the field test
μ_k = viscosity of water at the test conditions
μ_a = viscosity of water at the adjusted design temperature.

For on-site sewage systems in northern climates a design (operating) temperature of 4°C may be appropriate for sewage systems used year round. Table 2.2 provides the temperature correction factor for different water/soil test temperatures, assuming a system design temperature of 4°C. Alternative correction factors can be calculated for regions with different design or operating temperature requirements.

Table 2.2: Viscosity of water for temperature calculations.
Adapted from (Streeter and Wylie, 1975)

Water/soil Test Temperature ºCelcius	Viscosity μ kg/m x s μ X 10^3	μ_k/μ_a For $\mu_a = 4^0$ C
4	1.560	1.000
5	1.519	0.974
6	1.469	0.942
7	1.419	0.910
8	1.369	0.878
9	1.319	0.846
10	1.308	0.838
11	1.268	0.813
12	1.228	0.787
13	1.188	0.762
14	1.148	0.736
15	1.140	0.731
16	1.110	0.712
17	1.080	0.692
18	1.040	0.667
19	1.010	0.647
20	1.005	0.644
21	0.975	0.625
22	0.945	0.606
23	0.915	0.587
24	0.885	0.567

If we were to assume that water and soil temperature down-slope of a septic disposal field were approximately 4°C in winter and the water/soil temperature was 20°C during the in situ permeability test, the value of Ka would be approximately equal to Kfs x 0.644. This difference may be within the design or other inherent factors of safety however the designer must be aware of this temperature effect and be sure that the system has adequate capacity under all operating conditions.

2.4 Potential Errors and How to Mitigate Them

One of the most important considerations, and potential sources of error, is not letting the test run long enough for the rate-of-fall to reach quasi **steady-state** conditions. As discussed in Section 3.3.4, typically quasi steady state flow can be considered to have been achieved after getting 3 to 5 consecutive rate-of-fall readings which are the same. Not waiting until steady state flow has been reached will typically result in **overestimation** of Kfs values.

Smearing and compaction from augering may also cause erroneous results. To avoid this, use a light touch when augering, and employ the "two-finger, two-turn rule" discussed in Section 3.3.3. The wire brush provided with the kit should also be used to brush the sides of the well hole and remove or scarify any smeared layer. Generally speaking, these errors will result in **under-estimation** of Kfs values.

As discussed in Section 3.3.2, wet (near-saturated) soils of all types are above ***field capacity*** and this may cause the Single-Head CHWP analysis to overestimate Kfs in fine-textured, structureless soils that are very wet (Reynolds, 2008, 2015). Practitioners should therefore be capable of recognizing that soil conditions are at, or drier than field capacity as a prerequisite to visually estimating $\boldsymbol{\alpha}$* to determine Kfs.

There is the potential for error due to **inappropriate selection of $\boldsymbol{\alpha}$***. Reynolds (2008) explained that the potential error due to improper selection of α* was not excessive and could be mitigated by using a ponded well height (H) that is as large as possible. Caution should be used not to make H too large, however, as this increases the likelihood of encountering **heterogeneity** such as layering, horizonation, cracks, worm holes, root channels, etc. If there were large variations in the soil profile such as a restrictive layer just below the hole or lenses of different soil textures throughout the tested range, the test may not provide representative results. To balance these two considerations, ETC has chosen a default well height of 15 cm for our permeameter, which seems to work well for most slow to moderately permeable soils. Alternative well heights to suit very fast or very slow soils can also be provided upon request.

The well hole should be as **cylindrical and have as flat a bottom as possible**. Small variations in hole diameter should not significantly affect the results (Twigg and Lilly, 1991, Reynolds, personal communication, 2015). Some manufacturers of other permeameters provide a *sizing auger* with their kit to facilitate creating a well hole with as flat a bottom as possible. However, Lilly (1991) recommends against the use of a sizing auger as it can increase soil smearing. The Riverside auger supplied with our kit has been found to produce a sufficiently flat bottomed well hole for most common applications (septic site assessments, stormwater system design).

The **temperature of the water in the permeameter** should be close to the ambient air temperature when conducting the test. If not, as the water temperature increases or decreases, the rate of water drop in the permeameter may vary and the rate will not become constant.

Several permeameter tests should be conducted at a site to be sure that the test results are representative of the true soil conditions. The examination of test pits in the area of the permeameter tests, plus the experience and judgment of the person conducting the test are critical to ensure that any results which are not consistent with the overall soil texture and structure are considered to be suspect and/or are rejected.

3 PASK CONSTANT HEAD PERMEAMETER

3.1 Background

There are several different constant head well permeameters. Although they are all capable of measuring Kfs, each have specific advantages and limitations which can affect their usefulness and suitability for a particular application.

Only the ETC "PASK" permeameter is described in this guide. This permeameter was suggested for use in Nova Scotia in the 1980's by David Pask of the Nova Scotia Department of Environment. It became popular in the Maritime provinces of Canada and beyond for on-site sewage disposal assessment and design/selection. The permeameter is easy to use and provides reliable results when used under appropriate conditions. The current components of the ETC Standard Pask Permeameter Kit are shown in Figure 3.

Figure 3: Components of ETC Pask Permeameter Kits showing Standard Permeameter (left) and Slow Soils Permeameter (right).

3.2 Verify Integrity of Permeameter Seals

All ETC Pask Permeameters are tested at our facility, to verify they are water tight, before they are shipped. Dropping or rough handling of the permeameter could result in a crack in the reservoirs or seals causing leakage and erroneous test results. Therefore, it is important that your Permeameter be checked immediately upon receiving it, and thereafter on a periodic basis to ensure it is water tight. The procedure recommended by ETC can be found in Appendix B.

3.3 Pask Permeameter Test Method

Following are the steps to be employed when conducting a test with the ETC Pask Constant Head Permeameter.

3.3.1 Well Hole Location and Weather Conditions

Care should be taken to locate the hole(s) in locations that will most closely represent the Kfs values of the area in question. Attention should be paid to any soil condition that may cause an unrepresentative value of Kfs such as the presence of excessive worms or rodent activity, roots, clay or gravel lenses or soil cracks.

Strong or gusting winds can result in inaccurate readings from movement of the permeameter and/or movement of the water within the permeameter. If the permeameter can not be sufficiently stabilized, the test should be carried out another day (Elrick and Reynolds. 1992, Reynolds, 2008).

3.3.2 Soil Moisture Conditions

As mentioned previously in Section 2.1, as long as the soil moisture condition is less than its ***field capacity***, α^* can be selected from one of four general capillarity categories (via Table 2.1) which are primarily related to the soil structure and texture. One working definition of "field capacity" (Reynolds et al, 2015) is "the water content that exists in the soil once drainage stops after a soaking (saturating) rain". Cessation of soil drainage corresponds roughly with the time at which tile drains stop flowing after a rain event. As a rough "rule of thumb", soils at field capacity water content or drier do not compress under foot and they tend to crumble (rather than remold or smear) when worked in the hand.

The field capacity soil water content usually corresponds to the *pore water pressure head* (or *matric potential*) of ψ = -1 m; and it is the pore water pressure head that actually imparts soil capillarity, not the soil water content. Field measurement of near-surface ψ using a tensiometer (e.g. Quickdraw tensiometer, Soilmoisture Equipment Corp., CA) should be used if practitioners are not confident in their ability to assess the field capacity condition based on visual and textural indicators alone.

3.3.3 Well Hole Preparation

1. Using the Riverside/Bucket auger provided with the kit, excavate a well hole to the desired depth. Note: If you are planning to use the *ETC Quick Field Reference Tables* supplied with your kit, ensure that the well hole diameter produced by your auger is similar to what is indicated in the tables. The top layer of soil may be removed with a shovel or excavator before using the auger to complete the hole. Ensure the permeameter will rest on the bottom of the well hole, and not be suspended from the ground surface (i.e. Figure 4). Take care to not remove too much soil above the hole however, as it is important that the *wetting front* does not appear at the ground surface during the test.

2. The auger may smear the sides of the hole, particularly if the soil is fine textured and moist to wet. Smearing will usually result in an erroneous (lower) field saturated hydraulic conductivity (Kfs). *Sizing augers* (distributed with some permeameter kits made by others) should not be used, as it can make the smearing worse (Twigg and Lilly, 1991).

3. The "two finger method / two turn rule" is recommended to minimize the potential for smearing and compaction. It is described by Reynolds (2008) as follows:

   "once the top of the measurement zone has been reached, use only two fingers on each hand to apply downward pressure on the auger (ie. the weight of the auger applies most of the pressure), and make only two complete turns of the auger before emptying it out."

4. The bottom of the well should be at least 20 cm above the water table or capillary fringe (Figure 1) to prevent the water table from entering the well (Reynolds, 2008). If groundwater appears to be entering the well hole from the walls of the well, then the constant head method of testing may not be appropriate for this situation (Amoozegar A, Warrick AW. 1986).

5. Inspect well for smearing within the measurement zone using a flashlight. If smearing is present (soil generally appears smooth and polished), use the twisted stiff wire brush provided to remove it. Do not "over-brush" the hole. If removal of the smeared surfaces results in an appreciable increase in the size of the well hole, the new diameter should be measured and used in the calculations (Reynolds, 2008).

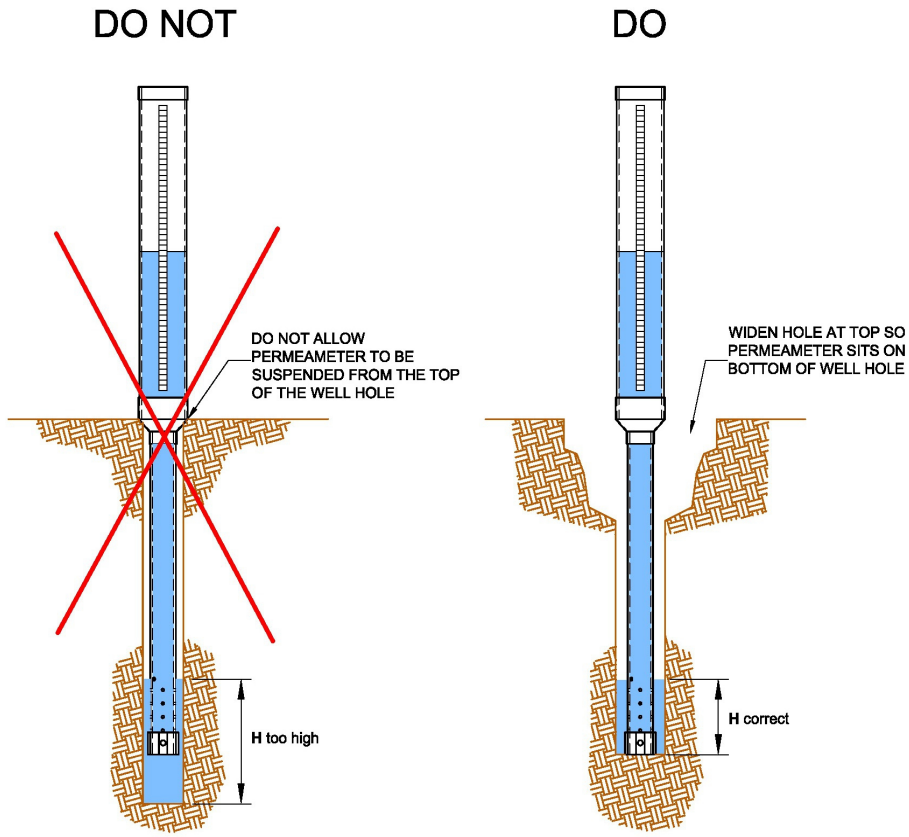

Figure 4: Proper Installation of the Pask Permeameter

3.3.4 Water Dispersal from the Permeameter

1. Fill the permeameter with water and apply the ABS cap so that the spring clip button locks it in place. The distance from the bottom of the cap to the air inlet hole should be exactly 15cm.

2. Place the support screen, if one is being used, on the bottom of the well hole.

3. Invert the permeameter into the hole, ensuring that it rests on the bottom of the hole. Carefully lean the permeameter against the side of the well hole so that it is stable and will not shift during the test. It should be as straight as possible, but it is not necessary for the permeameter to be perfectly vertical during the test. It is more important for the permeameter to be stable, so it will not shift once you start taking readings.

4. Water will initially flow out of the permeameter reservoir until the head of water in the well reaches the level of the air inlet hole. With some soil conditions, this initial rapid flow can cause "slaking" of the side walls of the well hole into the water. This may be

prevented by using a *well screen* or by backfilling around the lower tube of the permeameter with clean pea gravel (Lilly 1994, p75).

5. Allow the flow out of the permeameter to reach equilibrium (approach a constant, *quasi "steady state"* flow rate). Most medium permeability soils will reach quasi steady state flow conditions within 30 minutes to an hour. However, this can take as little as a few minutes in highly permeable materials to several hours in very slowly permeable soils. Monitor the reservoir water level at a reasonably consistent timing interval **until the rate of fall becomes relatively constant**. Typically quasi steady state flow can be considered to have been achieved after getting 3 to 5 consecutive rate of fall readings which are the same.

6. Record the value for the "steady state" rate of fall on the Field Permeability Test Sheet.

7. Use the table of soil structure and texture categories (Table 2.1) to estimate an appropriate α^* value for the soil zone tested.

8. Determine the *field saturated hydraulic conductivity* (Kfs) from the *ETC Quick Field Reference Tables*, or from first principles by using the formulas provided in this guide.

9. Apply a temperature correction to Kfs if deemed appropriate (see Section 2.3).

3.3.5 Care and Cleaning of End Cap and Spring Clip

Flush the lower part of the tube, end cap and spring clip with clean water upon completion of each test. This will maintain smooth operation, and prevent the cap or clip from sticking due to soil particles becoming lodged between the parts. We recommend flushing the cap and tube in the stream of water as it flows from the permeameter when emptying it.

3.3.6 Testing Imported Septic Fill Materials

The ETC Pask Permeameter can also be used to determine Kfs of built up beds of septic sand and other imported fill materials. Compliance or quality assurance testing can be carried out at the construction site, or in a properly prepared *test pad* of fill constructed at the pit or stockpile location for the fill. A suggested procedure for constructing a test pad is described in the ***CAN CSA B65-12 Installation code for decentralized wastewater systems*** (Canadian Standards Association, 2012) and is summarized as follows:

- Build a representative "test pad" of fill having a minimum area of 3m x 3m (10ft x 10ft)
- Test pad should have a minimum thickness of 900mm (3ft), constructed using maximum 150mm (6inch) thick layers, lightly compacted to a density that approximates that of the completed raised bed of septic fill.
- The bottom of the well should be deep enough so that the wetting front does not appear on the surface of the fill during the test, but also shallow enough so the *field saturated bulb* does not reach the underlying native soil below the fill. (ETC Note: We suggest providing at least 30cm (12") of fill below the bottom of the well hole.)

3.4 Example Problem for Calculation of Kfs

3.4.1 Calculate Kfs from first principles using Equation 1.

The soil type as determined from examination of a test pit near to the permeability test location is a *sandy loam* with a *weak blocky structure*. Based on this assessment, from Table 2.1, we select:

$\alpha^* = 0.12\ cm^{-1}$

From the field permeameter test, the quasi steady state rate of fall (R) was determined to be:

R = 0.20 cm/min

Using the auger supplied with the ETC Pask Permeameter Kit, the well hole diameter will be approximately 8.3 cm, therefore, the well hole radius, a = 4.15 cm.

For the ETC Standard Pask Permeameter:

X = Reservoir cross sectional area = 53.46 cm^2 (inside diameter is 8.25 cm)
H = Height of constant head in well=15 cm (from bottom of plug to air inlet hole)

Calculating:

H/a = 15/4.15 = 3.61

Therefore, from Figure 2 we can determine that:

C = 1.36 (for $\alpha^* = 0.12\ cm^{-1}$ use line 1 in Figure 2)

Calculating:

$Q = XR = 53.46 \times 0.20 = 10.69\ cm^3/min$

Calculate Kfs using Equation 1:

$$Kfs = CQ / [2\pi H^2 + C\pi a^2 + (2\pi H/\alpha^*)]$$

Where formula constants are grouped and named as "A" and "B":

$A = 2\pi H^2/C + \pi a^2$ $\qquad$ $B = 2\pi H/C$

Therefore, to calculate the field saturated hydraulic conductivity:

$$Kfs = Q/(A + B/\alpha^*)$$

Calculating:

$$A = (2\pi 15^2)/1.36 + \pi 4.15^2 = 1093.60 cm^2$$

$$B = (2\pi 15)/1.36 = 69.30 cm^2$$

Finally calculating:

$$Kfs = Q/(A + (B/\alpha^*)$$
$$Kfs = 10.69/(1093.60+69.30/0.12) \text{ cm/min}$$
$$Kfs = 6.3 \times 10^{-3} \text{ cm/min}$$
$$Kfs = 1.1 \times 10^{-6} \text{ m/sec}$$

3.4.2 Determine Kfs from ETC Quick Field Reference Tables

Using the table for $\alpha^* = 0.12$ cm^{-1}, pick the Kfs value which corresponds to a rate of fall R = 0.20cm/min. The Kfs value is 1.1E-06 m/sec = 1.1 x 10^{-6} m/sec.

3.4.3 Temperature Correction

Assume that the soil and water temperature at time of testing in the example above was 10° C. If the septic system is to operate during the winter and the design winter soil/effluent temperature is anticipated to be 4° C, then the temperature corrected permeability would be calculated using equation 2 as follows:

$$Ka = Kfs \times \mu_k/\mu_a$$

where: Ka = corrected permeability adjusted for design temperature conditions
Kfs = the calculated permeability from the field test
μ_k = the viscosity of water at the test conditions (Table 2.2)
μ_a = the viscosity of water at the adjusted design temperature (Table 2.2)

Therefore:

μ_k= 1.308 at 10 °C
μ_a= 1.56 at 4 °C

So: μ_k/μ_a = 0.838 (Table 2.2)

$$Ka = 1.1 \times 10^{-6} \text{ m/sec} \times 0.838$$

$$Ka = 8.9 \times 10^{-7} \text{ m/sec}$$

Therefore, it would be more conservative to use the temperature corrected value (Kfs = 8.9 x 10^{-7} m/sec) for septic system design purposes.

3.5 Relationship of Kfs to Percolation Time

The percolation test (PT) rate of fall or "Perc Time" is still used in many jurisdictions to determine suitability for onsite sewage disposal or for sizing of soil absorption systems (drainfields). It has been recognized for some time, however, that PT is less than ideal because it is not just a function of soil permeability, but also a function of test conditions.

The field saturated hydraulic conductivity, Kfs, determined using the CHWP technique, is a much more scientifically and technically sound indicator of soil permeability than the PT. Kfs testing controls for variables that can substantially affect the PT such as pit/borehole dimensions, depth of water ponding, soil capillary properties, and background soil moisture content at the time of the test.

Various correlations between Perc Time (PT) and field-saturated hydraulic conductivity (Kfs) have been proposed. Reynolds et al (2015) analysed PT versus Kfs correlations from Virginia, Georgia, Connecticut, and Ontario. None of the correlations were found to be generally applicable, accurate or scientifically defensible, in part because they did not completely describe the factors affecting PT and Kfs.

An accurate and physically based analytical expression relating PT to Kfs for cylindrical test holes was proposed (Reynolds, 2015 and Reynolds et al, 2015) from which usable PT versus Kfs relationships are now possible. A procedure has been described which shows how to determine PT from Kfs using the single-ponded height CHWP method. The reader should consult Reynolds et al (2015) for a detailed discussion of the factors and applicability of the newly developed PT to Kfs relationship. A summary of a simplified procedure to determine PT from Kfs which is applicable to the current ETC Pask Permeameter kit is outlined below.

Step 1: Determine Kfs and α* using the Single-Head method outlined in this user guide.

Step 2: Determine the appropriate PT to Kfs *conversion factor*, ***m***, from Table 3.1 on the next page.

Step 3: Determine the "equivalent" PT that corresponds to the H, d (a), α* and Kfs values, using the relationship, **PT = m/Kfs**, where Kfs is in meters/sec.

The calculated PT value is referred to as "equivalent" because borehole water level is held constant (at H) by the CHWP, thereby preventing direct measurement of PT = $\Delta t/\Delta H$.

Table 3.1: Conversion factor, *m*, relating Perc Time (PT) to Kfs for constant head, H=15.0cm and well hole diameter, d=8.3cm. PT=m/Kfs, where Kfs is in meters/sec.

Constant Head, H = **15.0** cm
Ave. Well Hole Diameter, d = **8.3** cm

Capillarity Category	Representative α* (cm-1)	m (for PT in min/cm)	m (for PT in min/inch)
Negligible	1.0	7.74E-06	1.97E-05
Weak	0.36	7.00E-06	1.78E-05
Moderate	0.12	5.39E-06	1.37E-05
Strong	0.04	3.18E-06	8.07E-06
Very Strong	0.01	1.05E-06	2.68E-06

CAUTION: It must be emphasized that Table 3.1 only applies to the well characteristics indicated. Refer to our web site (DynamicMonitors.com) for conversion tables applicable for other auger/well hole sizes and constant heads, or contact us to order custom tables.

REFERENCES

Amoozegar A, Warrick AW. 1986. Hydraulic conductivity of saturated soils: field methods. Methods of Soil analysis, Part 1 – Physical and mineralogical methods. 2nd edition. Agronomy Monograph No. 9, (American Society of Agronomy/Soil Science Socitety of America: Madison).

Bagarello, V., M. Iovino, and W.D. Reynolds. 1999. Measuring hydraulic conductivity in a cracking clay soil using the Guelph permeameter. Transactions of the American Society of Agricultural Engineers. 42(4):957-964.

Canadian Standards Association, 2012. CSA B65-12 Installation Code for Decentralized Wastewater Systems. Canadian Standards Association, Toronto, ON, Canada.

Constantz, J., W. N. Herkelrath, and F. Murphy. 1988. Air encapsulation during infiltration, Soil Sci. Soc. Am. J., 52, 10–16.

Elrick, D.E., and W.D. Reynolds. 1986. An analysis of the percolation test based on three dimensional saturated-unsaturated flow from a cylindrical test hole. Soil Science. 42:308-321.

Elrick, D.E., W.D. Reynolds, and K.A. Tan. 1989. Hydraulic conductivity measurement in the unsaturated zone using improved well analyses. Ground Water Monitoring Review. 9:184-193.

Elrick, D.E., and W.D. Reynolds. 1992a. Infiltration from constant-head well permeameters and infiltrometers. Pages 1-24. In G.C. Topp, W.D. Reynolds, and R.E. Green (eds.) Advances in Measurement of Soil Physical Properties: Bringing Theory into Practice. Soil Science Society of America Special Publication No. 30, Soil Science Society of America, Madison, USA.

Elrick, D.E., and W.D. Reynolds. 1992. Infiltration from constant-head well permeameters and infiltrometers. Soil Science Society of America Special Publication No. 30:17, 20.

Elrick, D.E., and W.D. Reynolds. 1992b. Methods for analysing constant-headwell permeameter data. Soil Science Society of America Journal. 56:320-323.

Lilly, A. 1994. The determination of field-saturated hydraulic conductivity in some Scottish soils using the Guelph Permeameter. Soil Use and Management 10, 72-78.

Lilly, A. 2000. The relationship between field-saturated hydraulic conductivity and soil structure: development of class pedotransfer functions. Soil Use and Management 16, 56-60.

REFERENCES, cont'd

Reynolds,W.D., S.R. Vieira, and G.C. Topp. 1992. An assessment of the single-head analysis for the constant headwell permeameter. Canadian Journal of Soil Science. 72:489-501

Reynolds,W.D. 1993. Saturated hydraulic conductivity: field measurement. In Carter, M.R. (ed.) Soil Sampling and Methods of Analysis. Canadian Society Soil Science. Lewis Publishers, Boca Raton, FL, USA. pp.599-613

Reynolds,W.D. 2008, Saturated Hydraulic Properties: Well Permeameter. In Carter, M.R. and Gregorich, E.G. (Eds.), Soil Sampling and Methods of Analysis (2nd ed.). Canadian Society of Soil Science. CRC Press, Boca Raton, FL., USA, pp. 1025-1042.

Reynolds, W.D., 2016. A unified perc test – well permeameter methodology for absorption field investigations. Geoderma 264 (2016) 160–170.

Reynolds,W.D. and Galloway, K.A. and Radcliffe, D.E. 2015. The relationship between perc time and field-saturated hydraulic conductivity for cylindrical test holes. Proceedings of the Annual Conference of the National Onsite Wastewater Recycling Association, West Virginia Beach, West Virginia. November 2015.

Reynolds,W.D. 2015, Personal e-mail communication to K.Galloway

Streeter, V. and E.B. Wylie. 1975, Fluid Mechanics, 6th edition, (New York, US: McGraw-Hill Inc, 1972)

Twigg, R.J. and Lilly, A. 1991. Some problems and solutions concerning the use of the Guelph permeameter (GP) model 2800k1. *(Restricted circulation).*

APPENDIX A

Field Permeability Test Example

Example Field Permeability Test Data Sheet

FIELD PERMEABILITY TEST EXAMPLE

You have excavated a test pit and logged the data as shown in the following table.

Depth below the root mat (cm)	Soil Description
0 - 30	Loamy Sand, loose, dry
30 - 90	Loam, compact, moderate blocky structure
90 - 120	Loam, very dense, weak blocky structure
120 - 180	Clay loam, massive

You decide to do a field permeability test at a depth of 60cm with your Pask Permeameter in the middle of the compact loam layer.

The most appropriate α^* value for *Loam, compact, and moderate blocky structure* would be $\boldsymbol{\alpha^* = 0.12\ cm^{-1}}$.

The data recorded during the test are shown in the table below.

FIELD PERMEABILITY TEST # ____1____

D – reservoir diameter (cm)	8.25	**Soil Texture**	Loam
d – well hole diameter (cm)	8.3	**Soil Structure**	Moderate Blocky
H – height of water in well (cm)	15	**α* (cm-1)**	0.12
Depth below ground surface	60 cm	**C – Factor**	1.36

TIME (min)	(1) CHANGE IN TIME (min)	RESERVOIR WATER LEVEL (WL) (cm)	(2) CHANGE IN WL (cm)	(2) ÷ (1) RATE OF FALL (R) (cm/min)
0	-	**80.9**	-	-
6	6	**60.5**	20.4	3.4
12	6	**42.5**	18.0	3.0
15	3	**34.7**	7.8	2.6
19	4	**26.7**	8.0	2.0
22	3	**21**	5.7	1.9
30	8	**5**	16.0	2.0

The last three readings have stabilized (approached steady state). A rate of fall value of **R = 1.9 cm/min** is selected and the quick reference table for $\boldsymbol{\alpha^* = 0.12\ cm^{-1}}$should be used. The field saturated hydraulic conductivity Kfs = 1.0E-05 m/sec = 1.0×10^{-5} m/sec.

Engineering Technologies Canada Ltd.

OWNER'S NAME: _____

SITE LOCATION: _____

PID #: _____

TEST PIT #: _____

TECHNICIAN: _____

DATE: _____

WEATHER/TEMPERATURE: _____

FIELD PERMEABILITY TEST #:

D – reservoir diameter (cm)		Soil Texture	
d – well hole diameter (cm)		Soil Structure	
H – height of water in well (cm)		α* (cm-1)	
Depth below ground surface (cm)		C – Factor	

TIME (min)	(1) CHANGE IN TIME (min)	RESERVOIR WATER LEVEL (WL) (cm)	(2) CHANGE IN WL (cm)	(2) ÷ (1) RATE OF FALL (R) (cm/min)

Quasi Steady-State Rate of Fall (R) = _____ cm/min

APPENDIX B

Procedure to Verify Integrity of Permeameter Seals

Warranty Information

1-16 Myrtle Street, Stratford Business Park
Stratford, PE, Canada, C1B 2W2
Toll Free 1-888-747-7645 (SOIL)

ETC PASK PERMEAMETER – PROCEDURE TO VERIFY INTEGRITY OF PERMEAMETER SEALS

All ETC Pask Permeameters are tested at our facility to verify that they are water tight, before shipping to the customer. Dropping or rough handling of the permeameter could result in a crack or seal leakage. This could cause erroneous test results. Therefore, it is important that your Permeameter be checked immediately upon receipt ,and thereafter on a periodic basis to ensure it is water tight. The procedure recommended by ETC / Dynamic Monitors is provided below.

1) Pre-fill a minimum 150mm (6”) deep bucket with water to a depth of at least 150mm (6”). Place the small bucket inside a larger deeper bucket in case water overflows or permeameter leaks.

2) Fill the permeameter with water. Attach cap to end of lower tube.

3) Turn the permeameter right side up into the small bucket (ie. same orientation as when conducting a test in the field).

4) <u>Stabilize the permeameter so it will not fall over.</u>

5) Water should rise to the level of the uppermost (air inlet) hole in the permeameter and stop.

6) Note the starting water level on the clear scale. Check the permeameter again after a minimum of 15 minutes. Note if the water level on the scale has dropped (it should not).

7) If the water level has dropped, or if there is any on-going air bubbling, it means that the permeameter is leaking. This will result in erroneous Kfs values.

8) If the permeameter is leaking, stop using it immediately. Contact Dynamic Monitors to see if it would be covered under warranty, or if it can be repaired.

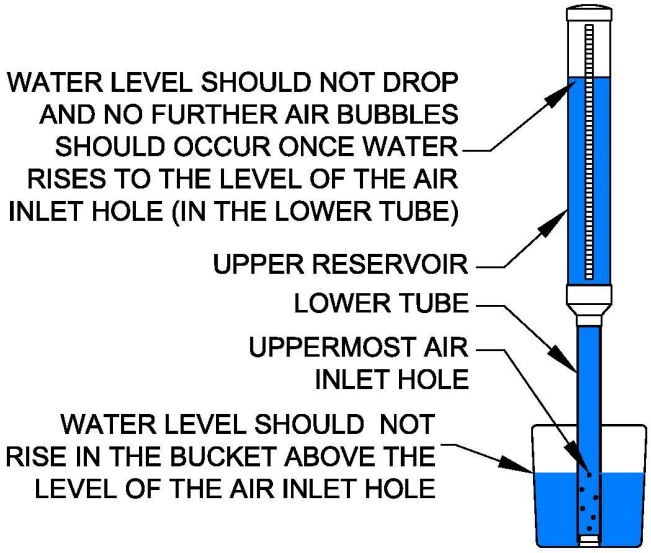

1-16 Myrtle Street, Stratford Business Park
Stratford, PE, Canada, C1B 2W2
Toll Free 1-888-747-7645 (SOIL)

Product Registration & Warranty

Register your product with us so that we may keep you informed with any updates pertaining to scientific developments, formulas or the quick field calculation tables used with our permeameters, or of any significant developments related to determining permeability and hydraulic conductivity using constant or falling head permeameters.

Dynamic Monitors will extend warranty coverage to two (2) years when you register your product within thirty (30) days of purchase. If you do not register your product, the one (1) year Base Limited Warranty will apply.

REGISTER YOUR PERMEAMETER ON-LINE TODAY

To review detailed warranty terms and to be eligible for the 2 Year, extended Registered Limited Warranty, visit our web site (**DynamicMonitors.com**) under the "**RESOURCES**" tab or by visiting this link:

https://dynamicmonitors.com/permeameter-warranty-product-registration/

APPENDIX C – SITE EVALUATION AND SOIL TESTING PROTOCOL FOR STORMWATER INFILTRATION

Site Evaluation and Soil Testing Protocol for Stormwater Infiltration

C1.0 INTRODUCTION

C1.1 Purpose of the Protocol

The purpose of this protocol is to describe evaluation and field testing procedures to:

- Determine if stormwater infiltration best management practices (BMPs) are well suited to a site, and at what locations; and
- Obtain the required data for stormwater infiltration BMP design.

C1.2 When to Conduct Testing

Designers are encouraged to conduct site evaluation and soil testing early in the development planning and design process so that information gained can be incorporated into the design. Chapters 2 and 3 of this guide describe planning and design principles, processes and practices to better integrate stormwater management into the development planning process. It is recommended that site evaluation and soil testing be conducted following the development of a preliminary plan for the proposed development. The designer should possess an understanding of potential BMP types and locations prior to soil testing. On-site tests may be carried out in advance to identify potential BMP types and locations.

C1.3 Who Should Conduct Testing

Qualified professionals, who can substantiate by qualifications or experience their ability to carry out the evaluation, should conduct the soil testing. A professional, experienced in observing and evaluating soil conditions is necessary to ascertain conditions that might affect BMP performance that cannot be thoroughly assessed with testing procedures.

C2.0 SOIL INFILTRATION TESTING: A MULTI-STEP PROCESS

Soil infiltration testing is a four-step process to obtain the necessary information for stormwater management planning and design. The four steps include:

1. Background Evaluation
    - Based on available published and site specific data;
    - Includes consideration of proposed development plan;
    - Used to identify potential BMP types, locations and soil test locations;
    - Done prior to field work; and
    - On-site soil tests may be done to identify/screen potential BMP locations.

2. Test Pit or Soil Boring Observations
    - Includes multiple testing locations;
    - Provides an understanding of sub-surface conditions; and

- Identifies limiting conditions (e.g., aquitard, bedrock or water table elevations).

3. Infiltration Testing
   - Must be conducted on-site;
   - Various testing methods are available; and
   - Different testing methods for screening versus verification purposes.

4. Design Considerations
   - Determination of a suitable infiltration rate for design calculations; and
   - Consideration of desired BMP drawdown period.

C2.1 Step 1. Background Evaluation

Prior to performing testing and developing a detailed site plan, existing site conditions should be inventoried and mapped including, but not limited to:

- Surficial geology and underlying stratigraphy;
- Watercourses (perennial and intermittent), water bodies, wetlands and floodplains;
- Small headwater drainage features;
- Topography, slope, and drainage patterns;
- Existing land cover and land use;
- Natural heritage conservation areas; and
- Other man-made features or conditions that may impact design such as existing nearby structures (buildings, infrastructure, etc.).

A sketch plan or preliminary layout plan for the proposed development should be evaluated, including:

- The preliminary grading plan and areas of cut and fill;
- The location and water surface elevation of all existing, and location of proposed water supply sources and wells;
- The location of all existing and proposed on-site wastewater (septic) systems;
- The location of other features of note such as utility rights-of-way, water and sewer lines, etc.;
- Existing data from borehole, well and geophysical testing; and
- Proposed location of development features (buildings, roads, utilities, etc.).

In Step 1, the designer should determine the potential location of infiltration BMPs. The approximate location of these BMPs should be noted on the proposed development plan and should serve as the basis for the location and number of soil tests to be performed on-site.

Important: If the proposed development is located on areas that may otherwise be suitable for stormwater infiltration BMPs, or if the proposed grading plan is such that potential BMP locations are eliminated, the designer is strongly encouraged to revisit the proposed layout and grading plan and adjust the development plan as necessary.

Development of areas suitable for infiltration BMPs does not preclude the use of subsurface infiltration BMPs for runoff volume reduction and groundwater recharge benefits (e.g., soakaways, infiltration trenches and chambers, perforated pipe systems).

C2.2 Step 2. Test Pit or Soil Boring Observations

Test pits or soil borings provide information regarding the soil horizons and overall soil conditions both horizontally and vertically in that portion of the site. Multiple observations can be made across a site at a relatively low cost and in a short time period. The use of test pits is preferable to soil borings as visual observation is narrowly limited in a soil boring and the soil horizons cannot be observed *in-situ*, but must be observed from the extracted borings.

Test pit excavations or soil borings should extend to a depth of between 2.5 to 5 metres below ground surface or until bedrock or fully saturated conditions are encountered. It is important that the tests provide information related to conditions at least 1.5 metres below the proposed bottom elevation of the infiltration BMP. Test pit trenches should be benched at 1 metre depth intervals for access and infiltration testing. A test pit should never be accessed if soil conditions are unsuitable for safe entry, or if site constraints preclude entry or exit. Where excavation of a test pit to the required depth would create an undesirable or unsafe condition, two soil borings may be conducted instead.

At each test location, the following conditions should be noted and described:

- Soil horizons (upper and lower boundary);
- Soil texture and colour for each horizon;
- Color patterns (mottling) and observed depth;
- Depth to water table (if encountered);
- Depth to bedrock (if encountered);
- Observations of pores or roots (size, depth);
- Estimated type and percent coarse fragments;
- Hardpan or other limiting layers; and
- Strike and dip of soil horizons.

At the designer's discretion, soil samples may be collected at various horizons for additional analyses (e.g., grain size analysis).

The number of test pits or soil borings varies depending on site conditions and the proposed development plan. General guidelines are as follows:

- For infiltration BMPs with footprint surface areas from 50 to 900 square metres, a minimum of two test pits or one test pit and two soil borings are required at, or within 10 metres of the proposed location to determine the suitability and distribution of soil types present;
- For infiltration BMPs with footprint surface areas greater than 900 square metres, a minimum of one test should be conducted for each 450 square metres of

footprint surface area. Tests should be conducted equidistant from each other to provide adequate characterization of the area;

- For linear infiltration BMPs a minimum of one test should be conducted within each soil mapping unit present along the proposed BMP location. Soil borings should be conducted every 50 metres and a test pit should be conducted every 450 metres; and
- For sites with multiple infiltration BMPs, each with footprint surface areas less than 50 square metres, a minimum of one test pit is required and one soil boring per infiltration BMP location is recommended.

The recommendations above are guidelines. Additional tests should be conducted if local conditions indicate significant variability in soil type, geology, water table levels, bedrock or topography. Similarly, uniform site conditions may indicate that fewer tests are required.

C2.3 Step 3. Infiltration Testing

A variety of field tests exist for estimating the infiltration rate of the native soil that include the use of permeameter or infiltrometer devices, percolation tests and empirical relationships between grain size distribution and hydraulic conductivity. At least one test should be conducted at the proposed bottom elevation of the infiltration BMP, plus additional tests at every other soil horizon encountered within 1.5 metres below the proposed bottom elevation. A minimum of two tests per test pit are recommended. More tests are warranted if results from the first two tests are substantially different. The geometric mean value should be used to determine the average infiltration rate for each soil horizon following multiple tests.

Based on field observations, infiltration testing results and the desired drawdown period (typically 48 hours), the designer may elect to modify the proposed bottom elevation of a BMP (see Step 4). Therefore, personnel conducting infiltration tests should be prepared to adjust test locations and depths depending upon observed conditions.

Infiltration testing methods discussed in this protocol include:

- Guelph permeameter test;
- Double-ring infiltrometer test;
- Borehole permeameter test; and
- Percolation test.

There are differences between these methods. Guelph permeameter and double-ring infiltrometer tests estimate the vertical movement of water through the bottom of the test area. The outer ring helps to reduce the lateral movement of water in the soil. Borehole permeameter and percolation tests allow water movement through both the bottom and sides of the test area. For this reason, the measured rate of water level drop in these types of tests must be adjusted to represent the discharge that is occurring on both the bottom and sides of the test hole.

For initial screening of a site for potential BMP types and locations, percolation tests and grain size analyses of samples from soil borings are suitable methods for estimating the infiltration rate of the native soil. Tests should not be conducted in the rain or within 24 hours of significant rainfall events (>15 millimetres depth), or when the temperature is below freezing. The preferred testing period is during April and May. This is the period when infiltration is likely to be diminished by saturated conditions. Percolation tests conducted between June 1 and December 31 should be done following a 24 hour pre-soaking period to simulate field saturated conditions. Pre-soaking is not required for permeameter or infiltrometer test methods.

To verify native soil infiltration rates for design purposes, it is strongly recommended that infiltration tests be carried out with a permeameter or infiltrometer to determine the field saturated hydraulic conductivity (K_{fs}), rather than percolation tests or grain-size analyses. Alternatively, other permeability test procedures that yield a saturated hydraulic conductivity rate can be used, such as formulas developed by Elrick and Reynolds[1], or others for computation of hydraulic conductivity and saturated hydraulic conductivity.

Many *in-situ* methods have been developed for determining field saturated hydraulic conductivity within the unsaturated (vadose) zone of the soil. Detailed testing methods and standards that are available but not discussed in detail in this protocol include (but are not limited to):

- Constant head well permeameter method (i.e., Guelph Permeameter method)[2, 3];
- Constant head double-ring infiltrometer method[3, 4];
- Constant head pressure (single-ring) infiltrometer method[5];

A complete guide for comparing standard methods is presented in ASTM International Designation D5126-90 (2004)[6]. Further detailed discussion on standard methods can also be found in Amoozegar and Warrick (1986)[5].

---

[1] Elrick, D.E. and Reynolds, W.D. 1992. Infiltration from constant head well permeameters and infiltrometers. In, G.C. Topp, W.D. Reynolds and R.E. Green (Eds.). Advances in measurement of soil physical properties: Bringing theory into practice. Special Publication 30. Soil Society of America. Madison, WI.

[2] Reynolds, W.D., Elrick, D.E. 1986. A method for simultaneous *in-situ* measurement in the vadose zone of field-saturated hydraulic conductivity, sorptivity and the conductivity-pressure head relationship. *Ground Water Monitoring Review*. No. 9. pp. 184-193.

[3] Reynolds, W.D. 1993. Saturated Hydraulic Conductivity: Field Measurement. In, M.R. Carter (ed.). Soil Sampling and Methods of Analysis. Chapter 56. Canadian Society of Soil Science. Lewis Publishers. Ann Arbor, MA.

[4] ASTM International. 2003. Designation D 3385-03, Standard Test Method for Infiltration Rate of Soils in Field Using a Double-Ring Infiltrometer. West Conshohocken, PA.

[5] Amoozegar, A. and Warrick, A.W. 1986. Hydraulic conductivity of saturated soils: field methods. In, A. Klute (ed.) Methods of Soil Analysis. 2nd edition. No. 9 Agronomy. American Society of Agronomy, Madison, WI.

[6] ASTM International. 2004. Designation D5126-90 (2004), Standard Guide for Comparison of Field Methods for Determining Hydraulic Conductivity in the Vadose Zone. West Conshohocken, PA.

For the purpose of designing the infiltration BMP, hydraulic conductivity values (typically in centimetres per second) generated from permeameter or infiltrometer tests must be converted into infiltration rates (typically in millimetres per hour). **It is critical to note that hydraulic conductivity and infiltration rate are two different concepts and that conversion from one parameter to another cannot be done through unit conversion**. Particularly for fine grained soils, there is no consistent relationship due to the many factors involved. Table C1 and Figure C1 describes approximate relationships between hydraulic conductivity, percolation time and infiltration rate. Measured hydraulic conductivity values can be converted to infiltration rates using the approximate relationship described in Figure C1.

Table C1: Approximate relationships between hydraulic conductivity, percolation time and infiltration rate

Hydraulic Conductivity, K_{fs} (centimetres/second)	Percolation Time, T (minutes/centimetre)	Infiltration Rate, 1/T (millimetres/hour)
0.1	2	300
0.01	4	150
0.001	8	75
0.0001	12	50
0.00001	20	30
0.000001	50	12

Source: Ontario Ministry of Municipal Affairs and Housing (OMMAH). 1997. Supplementary Guidelines to the Ontario Building Code 1997. SG-6 Percolation Time and Soil Descriptions. Toronto, Ontario.

Following testing, the test pits should be refilled with the original soil and the surface replaced with the original topsoil.

The results and locations of all test pits, soil borings and infiltration tests should be included in documents submitted to commenting and approval agencies in support of the development proposal.

C2.4 Step 4. Design Considerations

The infiltration rate used to design an infiltration BMP must incorporate a safety correction factor that compensates for potential reductions in soil permeability due to compaction or smearing during construction, gradual accumulation of fine sediments over the lifespan of the BMP and uncertainty in measured values when less permeable soil horizons exist within 1.5 metres below the proposed bottom elevation of the BMP.

Figure C1: Approximate relationship between infiltration rate and hydraulic conductivity

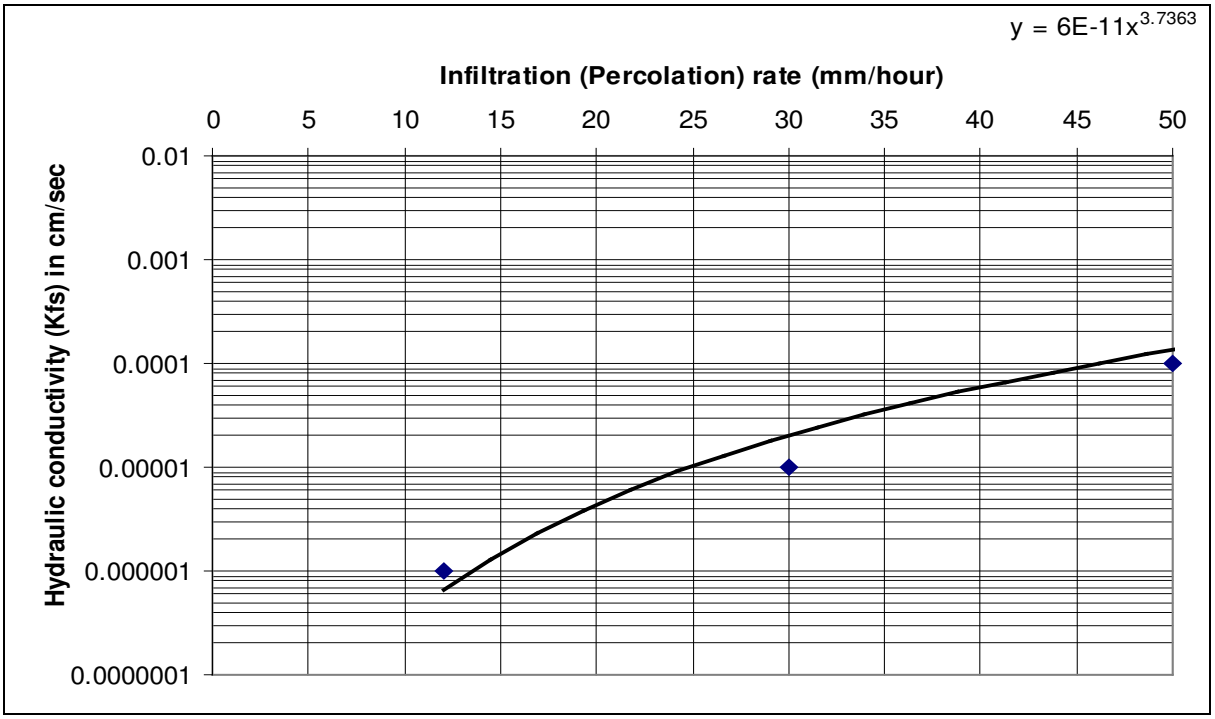

Source: Ontario Ministry of Municipal Affairs and Housing (OMMAH). 1997. Supplementary Guidelines to the Ontario Building Code 1997. SG-6 Percolation Time and Soil Descriptions. Toronto, Ontario.

The measured infiltration rate (in millimetres per hour) at the proposed bottom elevation of the BMP must be divided by a safety correction factor selected from Table C2 to calculate the design infiltration rate. To select a safety correction factor from Table C2, calculate the ratio of the mean (geometric) measured infiltration rate at the proposed bottom elevation of the BMP to the rate in the least permeable soil horizon within 1.5 metres below the bottom of the BMP. Based on this ratio, a safety correction factor is selected from Table C2. For example, where the mean infiltration rate measured at the proposed bottom elevation of the BMP is 30 mm/h, and the mean infiltration rate measured in an underlying soil horizon within 1.5 metres of the bottom is 12 mm/h, the ratio would be 2.5, the safety correction factor would be 3.5, and the design infiltration rate would be 8.6 mm/h. Where the soil horizon is continuous within 1.5 metres below the proposed bottom of the BMP, the mean infiltration rate measured at the bottom elevation of the BMP should be divided by a safety correction factor of 2.5 to calculate the design infiltration rate.

Table C2: Safety correction factors for calculating design infiltration rates

Ratio of Mean Measured Infiltration Rates[1]	Safety Correction Factor[2]
≤ 1	2.5
1.1 to 4.0	3.5
4.1 to 8.0	4.5
8.1 to 16.0	6.5
16.1 or greater	8.5

Source: Wisconsin Department of Natural Resources. 2004. Conservation Practice Standards. Site Evaluation for Stormwater Infiltration (1002). Madison, WI.

Notes:

1. Ratio is determined by dividing the geometric mean measured infiltration rate at the proposed bottom elevation of the BMP by the geometric mean measured infiltration rate of the least permeable soil horizon within 1.5 metres below the proposed bottom elevation of the BMP.
2. The design infiltration rate is calculated by dividing the geometric mean measured infiltration rate at the proposed bottom elevation of the BMP by the safety correction factor.

The design infiltration rate should be used to determine the maximum depth of the water storage component of the BMP, based on the desired drawdown period (typically 48 hours to fully drain the BMP; see Chapter 4 for guidance regarding the design of specific infiltration BMP types). Based on the calculated design infiltration rate, assumptions regarding the bottom elevation of the BMP may need to be reconsidered and further infiltration testing may be warranted.

PATERSON GROUP

memorandum

re: **Geotechnical Review – Floor Slab Uplift**
Proposed Residential Development – Conservancy Lands Phase 3 & 4
Borrisokane Road – Ottawa, Ontario

to: Caivan Communities – **Susan Murphy** – susan.murphy@caivan.com

date: August 6, 2025

file: PG5036-MEMO.45

Further to your request and authorization, Paterson Group (Paterson) prepared the current memorandum to provide a geotechnical review of the potential for basement floor slab uplift within Phases 3 and 4 of the development, resulting from a 100-year flood event at the nearby outlet to the Jock River.

Geotechnical Review

It is understood that the City of Ottawa is concerned that flood conditions, resulting in slab uplift, could potentially occur at the residential homes following a 100 year flood event. As such, Paterson completed a review of the potential for uplift of the basement slab of a residential unit, resulting from a 100-year flood event occurring along the adjacent section of the Jock River. The current memorandum also serves as a review of the sophisticated system of preventative and mitigative measures in place to prevent a flood event from ever occurring at the subject residences. The following items are required for a flood event to impact the building's basement slab. It should be noted that several of these assumptions are not considered possible due to the qualified contractors completing the construction and Paterson's detailed inspection program for each subject structure. Also, it should be noted that a flood event is not possible due to the redundancy of the flood prevention system components that are currently in place for each building as per the City requirements for Sump Pump Use in Clay Soil Sites.

- The worst-case scenario for the subject dwellings would be represented by the residential units within the townhouse blocks located nearest to the floodplain, both due to the depth of the underside of footing elevation and the proximity to the Jock River.
- The flood water level would theoretically be above the footing level at the blocks located nearest the floodplain, and for the purpose of the review, equal to the 100-year flood elevation of the Jock River, identified by others as 91.78 m, despite the horizontal separation between the units and the edge of river, and the presence of low permeability soil and fill, which would limit the lateral movement of the flood water.
- It has been assumed that flood water will flow upstream through the stormwater management system and into the LID trenches, directly to the building foundation, due to flood conditions.

- It is assumed that the clay barrier surrounding the foundation walls and floor of the townhouse block is non-functional. The clay barrier surrounding the foundation is a critical element to eliminating flood risk and therefore, this barrier would need to be omitted to allow a flood event to occur. It should be noted that Paterson personnel complete on site inspections to verify the presence of this clay fill, so the assumption that the clay barrier is non-functioning is **not considered to be a valid design assumption**.
- It is assumed that the foundation drainage system is non-functional.
- It is assumed that the building's sump pump system, inclusive of the primary and secondary pump systems, and the battery back-up, is non-functional. Further, the above-grade overflow outlet will be non-functioning. It should also be noted that the functioning of the sump pump system, back-up system, alarms and the system outlet are checked by Paterson personnel upon the completion of the sump pump system installation. Paterson personnel complete a 'wet' test to confirm the full functioning of system to remove collected water as per design requirements. Therefore, the assumption of a non-functioning sump pump system is **considered to be well beyond a reasonable assumption for design considerations**.
- It is assumed that the basement floor slab is unreinforced.

Summary of Findings

As previously noted, several of the currently required design components for the sump pump system would need to fail or not be installed at all for a flood to occur at the subject buildings. In Paterson's opinion, it is very unrealistic to study a scenario where all of these design components simultaneously fail in order for a flood event, and slab uplift, to occur. There are several levels of redundancy in these flood prevention measures, which will protect these foundations from flood water, such as the barrier of clay fill surrounding the building, the sump pump system and sump discharge to ground outlet, clay seals within the service trenches and distance from building foundation to potential flood water source (i.e.- LID systems or surficial flood water from Jock River). See the City Standard Detail for Sump Pump Systems attached which presents the finished conditions surrounding the subject buildings upon successful completion of our inspection program during construction.

Further, it is unrealistic that the 100-year flood elevation would be encountered at the residential blocks, due to the elevation of the finished grading being well above the 100-year flood level. It should also be noted that the 100-year flood elevation would be a temporary condition that decreases over a limited time span, which does not provide sufficient time for water to pass through the soils in place across the subject site and contact a building foundation wall.

At the townhouse blocks nearest the Jock River, there is a minimum 7 m setback between the edge of the LID trench and building foundation. For the purpose of reviewing the potential for establishing hydrostatic pressure below the floor slab, flood water would have to travel this distance during a flood event, which can last between 7 to 8 days for a 100 year event. Based on the hydraulic conductivity values of the subject soils, the maximum horizontal distance that water could travel in that time is less than 4.5 m. Therefore, flood water travelling through stormwater management system, and through soil will not contribute to a flood event at any residential dwellings within the subject site.

Conclusion

In conclusion, the review presented herein demonstrates that these worst-case conditions are not possible to occur due to the comprehensive flood prevention and mitigation measures in place. Specifically, the clay barrier surrounding the foundation, the foundation drainage system and the sump pump system, while working most effectively in tandem with one another, all provide independent mitigation measures against the accumulation of water below the building footings and floor slab. These systems are all expected to function effectively in real-world conditions. Moreover, the assumption of non-functioning systems and water entering through the stormwater management system presents an unrealistic scenario that is not appropriate to consider as a design case to be reviewed.

The distance from the Jock River and the multiple layers of protective infrastructure eliminates the risk of a 100-year flood event impacting the building foundation. The measures in place, in combination with the natural dissipation of flood conditions, ensure protection against flooding and associated uplift forces. Consequently, uplift of the basement floor slab should not be considered a realistic risk to the residential dwellings within the subject site, and the current mitigative measures are deemed sufficient to protect the building from such adverse conditions.

We trust that the current submission meets your immediate requirements.

Best Regards,

Paterson Group Inc.

LICENSED PROFESSIONAL ENGINEER
August 6, 2025
D. J. GILBERT
100116130
PROVINCE OF ONTARIO

Kevin A. Pickard, P.Eng.

David J. Gilbert, P.Eng.

TECHNICAL BULLETIN ISTB-2018-04