JLR No.: 29899-002
Revision: 0

September 26, 2024

Prepared for:

12714001 CANADA INC.
100-768 Boulevard St-Joseph
Gatineau, QC
J8Y 4B8

Prepared by:

J.L. RICHARDS & ASSOCIATES LIMITED
343 Preston Street, Suite 900 and 1000
Ottawa, ON
K1S 1N4

Site Servicing Report

Residential Site Plan (Block 17)

2983, 3053 and 3079 Navan Road & 2690 Pagé Road, Ottawa, Ontario

J.L.Richards
ENGINEERS · ARCHITECTS · PLANNERS

Value through **service** and **commitment**

Table of Contents

1.0 INTRODUCTION 1
1.1 General 1
1.2 Site Description 1
1.3 Proposed Development 1
1.4 Proposed Connections to Existing Infrastructure 1
1.5 Consultation and Permits 1
2.0 WATER SERVICING 2
2.1 Water Supply Design Criteria 2
2.2 Domestic Water Demands 2
2.3 Fire Flow Requirements 3
2.4 Proposed Water Servicing, Boundary Conditions and Water Model 3
2.4.1 Proposed Water Servicing 3
2.4.2 Boundary Conditions 3
2.4.3 Water Model 4
2.5 Simulation Results 4
2.5.1 Peak Hour 4
2.5.2 Maximum Day Plus Fire Flow 5
2.5.3 Maximum Pressure 5
2.6 Summary and Conclusions 5
3.0 WASTEWATER SERVICING 6
3.1 Design Criteria 6
3.2 Proposed Sanitary Servicing and Design Flows 6
3.3 Summary and Conclusions 7
4.0 STORM SERVICING AND STORMWATER MANAGEMENT 8
4.1 Design Criteria 8
4.2 Proposed Stormwater Management Approach 8
4.3 Proposed Minor System Servicing 9
4.4 Stormwater Management Modelling Approach 9
4.4.1 Dual Drainage Model 9
4.4.2 Boundary Conditions 10
4.5 Modelling Parameters 10
4.5.1 Hydrological Parameters 10
4.5.2 Simulation of Storm Distributions 10
4.6 Simulation Results 10
4.6.1 Low Point Ponding Analysis 10
4.6.2 Roof Drainage 11
4.6.3 Parking Lot Drainage 11
4.6.4 Landscaped Drainage 12
4.6.5 Building Release Rates 12
4.7 Summary and Conclusions 12
5.0 Erosion and Sedimentation Control 13

List of Tables

Table 1: Water Demands 3
Table 2: Hydraulic Boundary Conditions 4
Table 3: Watermain Internal Diameters and C-Factors 4
Table 4: Wastewater Key Design Parameters 6
Table 5: Sanitary Design Flow Summary 6
Table 6: Catchbasin Ponding Depths 11
Table 7: Parking Area ICD Capture Analysis 11
Table 8: Landscaped Area ICD Capture Analysis 12

List of Appendices

Appendix A Concept Plan, Draft plan of Subdivision and Topographical Survey
Appendix B Pre-Consultation Meeting Notes and Site Servicing Report Checklist
Appendix C Water Servicing
Appendix D Stormwater Management
Appendix E Sanitary Servicing

1.0 INTRODUCTION

1.1 General

In 2023, J.L. Richards & Associates Limited (JLR) was retained by 12714001 Canada Inc. (the Owner) to prepare the detailed design of municipal infrastructure for Site Plan Approval (SPA) of the Mixed-Use Site Plan (Block 17). This Site Servicing Report (SSR) presents the servicing constraints and strategies for water, wastewater, stormwater servicing, and stormwater management in accordance with the City of Ottawa Design Guidelines, the associated technical bulletins and relevant design excerpts.

1.2 Site Description

The Residential Site Plan (Block 17) is located within the City of Ottawa's Official Plan boundary and consists of a 0.55 ha parcel bounded by Navan Road to the south, Page Road to the west, an existing property to the north, and the proposed East Ridge Orleans Subdivision to the east (as per the Site Servicing Report prepared by J.L. Richards and Associates, dated August 2024). The legal description of the subject property can be found in the Draft Plan of Subdivision attached to Appendix A.

A topographical survey was completed by Stantec Inc. in August 2024 (Appendix A). The survey indicates that the existing topography generally slopes downwards towards the intersection between Page Road and Navan Road.

1.3 Proposed Development

The proposed development will consist of two 4-story condominium buildings. Each building has 48 residential units, for a total of 96 residential units. The Concept Plan for the Residential Site Plan (Block 17) is attached to Appendix A.

1.4 Proposed Connections to Existing Infrastructure

Block 17 is proposed to be serviced by the infrastructure that is part of the East Ridge Orleans Subdivision. One sanitary, storm and water service lateral will extend to the parking garage footprint from the subdivision as shown in the servicing drawings.

1.5 Consultation and Permits

A pre-consultation meeting was held on September 13, 2023, to discuss the planning process, design criteria, and servicing constraints. A copy of the pre-consultation meeting notes and the site servicing checklist has been provided in Appendix B.

2.0 WATER SERVICING

2.1 Water Supply Design Criteria

A Hydraulic Network Analysis (HNA) was completed as part of the detailed design for the East Ridge Orleans subdivision to confirm that the proposed watermains could provide adequate supply while complying with both the Ottawa Design Guidelines for Water Distribution (July 2010) and Technical Bulletins ISDTB-2014-02, ISTB-2018-02 and ISTB-2021-03. These documents are herein referred to as the Design Guidelines and TB-2014-02, TB-2018-02, and TB-2021-03, respectively.

The HNA completed as part of the East Ridge Orleans Subdivision design included water demands for the Residential Site Plan (Block 17). The HNA has since been updated to reflect the proposed water service lateral for Block 17 but is based on the same demands and the boundary conditions used in the original East Ridge Orleans Subdivision HNA (refer to Appendix C for a copy of City correspondence for boundary conditions).

Section 4.2.2 of the Design Guidelines states the following criteria for development additions to the public water distribution system:

- Under maximum hourly demand conditions (peak hour), the residual pressures shall not be less than 276 kPa (40 psi);
- During periods of maximum day and fire flow demand, the residual pressure at any point in the distribution system shall not be less than 140 kPa (20 psi);
- In accordance with the Ontario Building Code (OBC) in areas that may be occupied, the static pressure at any fixture shall not exceed 552 kPa (80 psi);
- The maximum pressure at any point in the distribution system in unoccupied areas shall not exceed 689 kPa (100 psi); and
- Feedermains, which have been provided primarily for the purpose of redundancy, shall meet, at a minimum, the basic day plus fire flow demand.

2.2 Domestic Water Demands

The water demands presented in this section are based on the site layout and unit count shown in the Site Plan (Appendix A). Domestic water demands were calculated for 96 apartment units with an average density of 1.8 persons per unit, giving a total population of 173 people.

The residential consumption rates for average day, maximum day, and peak hour demand were set in accordance with Table 4-2 of the Design Guidelines. Table 1 summarizes the water consumption rates and peaking factors used in the HNA.

Table 1: Water Demands

Demand Scenario	Residential Water Consumption or Peaking Factor	Total Demands (L/s)
Average Day Demand	280 L/c/d	0.56
Maximum Day Demand	2.5 x Avg Day	1.40
Peak Hour Demand	2.2 x Max Day	3.08

2.3 Fire Flow Requirements

The City has specified that the Fire Underwriters Survey (FUS) method shall be used for any public or private site where new fire hydrants are being designed. Specifically, the required fire flow (RFF) for each structure was calculated in accordance with TB-2018-02.

The required fire flow for the Residential Site Plan (Block 17) was calculated as 233 L/s for Building E and 250 L/s for Building F. Refer to Appendix C for the detailed RFF calculations for the critical fire area.

Both buildings within Block 17 will be equipped with a fully supervised automatic sprinkler designed and installed in accordance with NFPA 13. In the analysis, a sprinkler flow of 1500 L/min (25 L/s) was applied to each building as recommended by the Owner's Mechanical Engineer (refer to Appendix C).

2.4 Proposed Water Servicing, Boundary Conditions and Water Model

2.4.1 Proposed Water Servicing

Water will be supplied to the Residential Site Plan (Block 17) by a 150 mm diameter water service that will connect to the 200 mm diameter watermain loop within the East Ridge Orleans subdivision. Fire protection will be provided by each building's sprinkler system, the proposed hydrants within the East Ridge Orleans Subdivision, and the existing hydrants on Navan Road and Page Road. The Siamese connection for each building is located no more than 45 m way from a hydrant as required by the OBC (refer to hydrant coverage markup in Appendix C).

2.4.2 Boundary Conditions

Hydraulic boundary conditions were provided by the City at the two proposed connection locations for the East Ridge Orleans subdivision (Connection 1 and Connection 2). Table 2 summarizes the hydraulic boundary conditions received (refer to Appendix C for a copy of the City correspondence).

The boundary condition for 250 L/s was used in this analysis since this is the maximum required fire flow for the site (refer to Section 2.3).

Table 2: Hydraulic Boundary Conditions

Demand Scenarios	Connection 1 Head (m)	Connection 2 Head (m)
Maximum HGL	130.7	130.7
Peak Hour	127.0	126.8
Max Day plus Fire Flow #4 15,000 L/min (250.00 L/s)	124.4	121.9

2.4.3 Water Model

A hydraulic water model within the WaterCAD® software platform was used to carry out the HNA (refer to the overall schematics presented in Appendix C). The water demands from Table 1 and the boundary conditions from Table 2 were input into the model for each demand scenario. Table 3 summarizes the watermain diameters and roughness coefficients used in the model, based on Sections 4.2.12 and 4.3.5 of the Design Guidelines.

Table 3: Watermain Internal Diameters and C-Factors

Nominal Diameter	Inside Diameter	C-Factor
150 mm	155 mm	100
200 mm	204 mm	110
300 mm	297 mm	120

2.5 Simulation Results

The HNA was carried out under steady-state peak hour, maximum day plus fire flow, and maximum pressure conditions to confirm that the proposed water servicing can meet the design criteria outlined in Section 2.1.

2.5.1 Peak Hour

The simulation results found the minimum pressure at the site during the peak hour condition to be 433 kPa (62.8psi) (refer to Appendix C), which exceeds the minimum pressure criterion of 276 kPa (40 psi) per the Design Guidelines.

2.5.2 Maximum Day Plus Fire Flow

Fire water supply will be provided by the fully automatic sprinkler system, a proposed hydrant within the East Ridge Orleans subdivision, and existing hydrants on Page Road and Navan Road. To ensure adequate fire protection, the maximum day demand shown in Table 1 was analyzed simultaneously with the fire flow requirements. As mentioned in Section 2.3, a sprinkler system flow of 1,500 L/min (25 L/s) was assumed for Block 17, and it was assumed that only one (1) building would require fire flow at once.

Once the maximum day demands, the sprinkler demands, and the 15,000 L/min (250 L/s) boundary condition provided by the City (refer to Table 2) were input in the model, the fire flow simulation was carried out by allowing WaterCAD® to calculate the available fire flow that can be drawn from a hydrant without allowing any part of the system to experience pressures less than 140 kPa (20 psi).

From the simulation results, the system is expected to deliver a minimum of 15,000 L/min (250 L/s) to the site through the contribution of the sprinkler system and the nearby hydrants. Attached to Appendix C is a map of the hydrant coverage for Block 17 which confirms that both buildings within the block meet the RFF of 250 L/s through the aggregate sum of hydrant flows. Based on Appendix I of TB-2018-02 hydrants within 75 m of a building can provide 95 L/s of fire flow and hydrants within 75 to 150 m of a building can provide 63 L/s of fire flow.

2.5.3 Maximum Pressure

Based on a zero (0 L/s) demand condition, the simulation results found the maximum pressure at the site to be 468 kPa (67.9 psi). This value is below the maximum pressure constraint of 552 kPa (80 psi), therefore pressure reducing valves are not anticipated to be required.

2.6 Summary and Conclusions

Based on the water simulation results, the proposed development can be serviced by the proposed 150 mm water service lateral connected to the 200 mm watermain loop within the East Ridge Orleans Subdivision. Furthermore, adequate water supply can be achieved from the proposed hydrants within the East Ridge Orleans Subdivision, and existing hydrants on Page Road and Navan Road.

3.0 WASTEWATER SERVICING

3.1 Design Criteria

The sanitary sewer system within the Residential Site Plan (Block 17) is designed in accordance with the Ottawa Sewer Design Guidelines and subsequent technical bulletins. The design parameters are applied under two scenarios as per ISTB Technical Bulletin 2018-01. The key design parameters have been summarized in Table 4.

Table 4: Wastewater Key Design Parameters

Design Parameter	Design Value
Average Apartment	1.8 ppu
Residential Average Flow	280 L/Cap/Day
Residential Peaking Factor	Harmon's Formula
Harmon's Correction Factor (K)	0.8
Infiltration Allowance	0.33 L/s/ha
Manning's Roughness Coefficient (n)	0.013
Allowable Slopes	Varies (Refer to Section 6.1.2.2 of ODSG)
Allowable Velocities	0.6 m/s – 3.0 m/s
Allowable Freeboard	-

3.2 Proposed Sanitary Servicing and Design Flows

Wastewater generated from the Residential Site Plan (Block 17) will be conveyed via a proposed 200 mm diameter sanitary service lateral, which will then discharge into the East Ridge Orleans Subdivision as shown in the Servicing Drawing.

Wastewater flows from the proposed development are presented in the Residential Site Plan (Block 17) Sanitary Design Sheet (refer to Appendix E). Based on the design criteria (Table 4) and the site constraints, a total design peak flow of 2.16 L/s is calculated for the development. Table 5 summarizes the results from the sanitary design sheet.

Table 5: Sanitary Design Flow Summary

Area	Site Area	Unit Count	Unit Density	Pop.	Harmon's Peaking Factor	Res. Peak Flow	Comm. Peak Flow	Infilt. Flow	Total Flow
Block 17	0.55 ha	96	1.8 ppu	173 persons	3.54	1.98 L/s	0.0 L/s	0.18 L/s	2.16 L/s

A 200 mm diameter sanitary service lateral is expected to have sufficient capacity to convey the wastewater flows for the site. The flows from this block were already incorporated in the design of the sanitary sewer for the subdivision (refer to the East Ridge Orleans Subdivision Site Servicing Report prepared by J.L. Richards and Associates, dated August 2024). As shown in this report, the subdivision will consist of 200 mm diameter pipes which will have, at minimum,

20.24 L/s of capacity. Furthermore, the overall subdivision inclusive of the Site Plan Blocks 14, 15 and 17 is expected to generate 12.98 L/s of wastewater flows which is less than the minimum expected capacity of the pipes by 35%. Therefore, it is anticipated that the sanitary sewer system downstream will have sufficient capacity for the 2.17 L/s of wastewater flows generated by Block 17.

Furthermore, it has been confirmed by the Owner's Mechanical Engineer that a 200mm diameter service will be sufficient to convey the flows generated by the mechanical fixtures (refer to Appendix E).

3.3 Summary and Conclusions

Wastewater servicing for Block 17 will be designed in accordance with the City of Ottawa Sewer Design Guidelines, the associated technical bulletins, and various background documents as highlighted throughout this section. Wastewater will be conveyed via a proposed 200 mm diameter sanitary service lateral which will then discharge into the East Ridge Orleans Subdivision. It is recommended that this wastewater servicing plan be implemented to provide adequate sanitary servicing for the proposed development.

4.0 STORM SERVICING AND STORMWATER MANAGEMENT

4.1 Design Criteria

Storm and stormwater management servicing for the Residential Site Plan (Block 17) was developed in accordance with the City of Ottawa 2012 Sewer Design Guidelines (OSDG) and the more recent Technical Bulletin PIEDTB-2016-01 (September 6, 2016). These two documents are herein referred to as the Design Guidelines in this section. A summary of the key storm and stormwater management criteria follows:

- Control minor system flows to the allowable release rates of 48 L/s as identified in Table 5-4 Site Servicing Report 2983, 3053 and 3079 Navan Road & 2690 Pagé Road, Ottawa, Ontario (JLR 2024);
- Proposed Storm sewers are designed to capture the 1:2-year storm event and the 1:10-year peak flows on Navan Road as a minimum using the Rational Method and using the regressions derived from Intensity-Duration-Frequency (IDF) equations as per the Design Guidelines;
- Provide a freeboard in the sewer network to the underside of footing (USF) of 300 mm during the 1:100-year storm where weeping tile connections are present;
- The runoff coefficients (C-factors) to be calculated based on the ratio of pervious and impervious surfaces depicted on proposed site plans;
- ;
- Minimum roadway slope of 0.1% from crest-to-crest for overland flow route;
- Minimum rear yard slope in the absence of perforated pipe system of 1.5% along with swale side slopes of 3 horizontal to 1 vertical;
- Maximum parking ponding depth of 350 mm (static and dynamic) as per the Design Guidelines and maximum depth of rear yard flow to be 300 mm;
- Minimum vertical clearance of 0.15 m between the spill elevation on the street and the finished grade (garage elevation);
- Minimum vertical clearance of 0.30 m between the rear yard spill elevation and the ground elevation at the building in the rear yards;
- Major system flows, up to and including the 1:100-year design storm event, are contained within the site using the parking lot area and surface drainage;
- Peak flows estimated based on an inlet time of ten (10) minutes, as per the Technical Bulletin ISDTB-2012-4.
- Quality control will be accommodated by Pond #3 to meet an MECP Enhanced Level of Protection (80% TSS removal).
- Provide measures to ensure that site preparation and construction is in accordance with the current Best Management Practices for Erosion and Sediment Control.

4.2 Proposed Stormwater Management Approach

In order to achieve the allowable release rates, the stormwater management of the site will include:

- Rooftop control with rooftop storage and released at a cumulative controlled release rate of 2 L/s for each building; per WATTS RD-200 detail for Small Area Roof Drain (Appendix D) and as recommended by the landowner's mechanical engineer.

- Surface storage within the parking lots in greater than a 1:2-year event with captured flows conveyed to the building plumbing system and internal cistern;
- Ramp runoff captured and conveyed to the building plumbing system and internal cistern;
- Storage in the building cistern with flows pumped at a controlled rate to the minor system with a backwater valve at the connection; and,
- Controlled release of the flows captured in the ditch drainage system for the surrounding landscaped areas.

Foundation drains will be connected to the internal building plumbing system therefore no HGL analysis is required.

4.3 Proposed Minor System Servicing

A minor system connection will be provided from the building envelope to the minor system within the subdivision. The connection will be sized based on the 1:2-year release from the site. The runoff coefficient is based on the ratio of impervious surfaces and grassed or landscaped areas. The breakdown between pervious and impervious surfaces is shown on the figure entitled Overall Site Imperviousness in Appendix D. A design sheet for sizing of the connection and sizing of pipes internal to the site is provided in Appendix D.

4.4 Stormwater Management Modelling Approach

4.4.1 Dual Drainage Model

The analysis of both major and minor drainage systems was carried out to demonstrate their compliance with respect to the design criteria described in Section 4.1. The performance of the major overland system and minor storm sewer system was analyzed with PCSWMM. This software is a dynamic model which allows both hydrologic and hydraulic components to be simulated in the same platform and also allows the simulation of the interaction between the major and minor systems. The PCSWMM software platform was used to:

- Generate the surface runoff hydrograph for each sub-area under various recurrences.
- Subdivide each inflow hydrograph into its minor and major system components based on the proposed inlet capture rates and roadway sag storage.
- Assess cascading, if any, and carry out dynamic routing of storm flows to determine flow depths along the roadways. As previously stated, the maximum major overland flow depths within the parking lot areas are to be limited to 350 mm or less, as per Technical Bulletin PIEDTB-2016-01.

PCSWMM was set-up to evaluate the proposed servicing as detailed on Drawing C01 and C02. Subcatchments were delineated for the structure roof areas, parking lot low points and landscaped low points. Model schematics are prepared in Appendix D.

4.4.2 Boundary Conditions

Boundary conditions are taken from the downstream subdivision model issued as part of the Site Servicing Report 2983, 3053 and 3079 Navan Road & 2690 Pagé Road, Ottawa, Ontario (JLR 2024).

The downstream 1:100-year HGL at the connection to the Subdivision at MH504 is identified as 78.75 m which is lower than any minor system within the site and therefore there is no backflow from the boundary condition and no impacts on HGL.

4.5 Modelling Parameters

4.5.1 Hydrological Parameters

The following parameters were used in the hydrologic component of PCSWMM:

- **Areas and Imperviousness**: Catchment ID and drainage areas used by PCSWMM match those shown on either Drawing DST or Figure E-1 (Appendix E1).
- **Catchment Width**: The catchment width is estimated at the width of overland sheet flow based on the grading of the catchment and slope direction.
- **Manning's Roughness Coefficient**: Manning's Roughness Coefficients of 0.013 and 0.25 were used for the impervious and pervious surfaces, respectively.
- **Horton Infiltration parameters**: City of Ottawa OSDG Horton Infiltration Parameters have been used in the modelling.
- **Initial Abstraction**: Initial abstraction of 4.67 mm and 1.57 mm was used for the pervious and impervious surfaces respectively, consistent with the OSDG.

4.5.2 Simulation of Storm Distributions

To assess peak flow rates and peak volume storage requirements the 3-hour Chicago storm has been simulated for the site for the 1:2-year event and 1:100-year event and the 24-hour SCS storms for the 1:100-year event.

4.6 Simulation Results

4.6.1 Low Point Ponding Analysis

Ponding depths in the low points in the parking area and landscaped areas are shown in Table 6.

Table 6: Catchbasin Ponding Depths

Low Point ID	Top of Grate (m)	Maximum Static Depth (mm)	3-hour Chicago 1:2 year Depth (mm)	3-hour Chicago 1:100 year Depth (mm)	24-hour SCS 1:100 year Depth (mm)
1	82.10	300	30*	100	50
2	82.28	300	10*	60	50
3	80.80	250	0	180	170
4	81.05	200	0	0	0
5	82.00	200	0	60	60

Those values marked with * are greater than 0 mm in the 2-year event due to the model setup. In order to represent the Zurn inlet control device, the orifice has been set at the top of grate elevation as the control is at the surface. Therefore, the model requires a head buildup over the structure for simulation of flows.

The simulation results compiled in Table 6 shows that:

- No ponding nor dynamic flow will occur in the 1:2-year event;
- Maximum ponding depth of 180 mm during the 1:100-year event; and,
- There is no spill from the site in the 1:100-year event.

4.6.2 Roof Drainage

The roof drainage system is to be designed by the Mechanical Engineer to achieve a flow rate of 2 L/s from each roof structure. The maximum depth of ponding required, assuming storage across 66% of the rooftop area, is 80 mm.

4.6.3 Parking Lot Drainage

The parking lot drainage system connects to the building cistern and is controlled by the ZURN_Z150F-6NH (detail provided in Appendix D) to allow the 1:2-year event to drain and for the surface to provide storage during greater events up to the 1:100 year. Capture rates are shown in **Error! Reference source not found.**

Table 7: Parking Area ICD Capture Analysis

Low Point	ICD Type	1:2 year Rational Flow (l/s)	1:100 year 3-hour Chicago Flow (l/s)	1:100 year 3-hour Chicago Head (m)
1	ZURN_Z150F-6NH	16	43	100
2		8	39	60

The table shows that the parking lot ICDs capture the 1:2-year design flow.

4.6.4 Landscaped Drainage

The landscaped drainage consists of typical rear yard system of swales and perforated pipes. The rear-yard system is connected to the building internal piping, upstream of the cistern. Flows are controlled using inlet control devices sized to ensure that the ponding criteria is met and sizing of the cistern is optimized. Capture rates and ponding depths are shown in Table 8.

Table 8: Landscaped Area ICD Capture Analysis

Low Point	ICD Type	1:2 year Rational Flow (l/s)	1:100 year 3-hour Chicago Flow (l/s)	1:100 year 3-hour Chicago Head (m)
3	Vortex_ICD_70	3	6	180
4		1		0
5	Vortex_ICD_70	2	6	60

The table above demonstrates that the landscaped area ICDs capture the 1:2-year design flow.

4.6.5 Building Release Rates

The allowable release rate from the site is calculated based on 85 L/s/ha for areas within the site extents and 43 L/s/ha for existing rear-yards draining into the site , In order to maintain flows within the allowable range, the building drainage system will be controlled to 41 L/s and both roof drains will each account for an additional 2 L/s. This remains below the allowable release rate of 47 L/s for the area draining into the subdivision. Based on a pumped rate of 41 L/s a cistern size of 49 m^3 is required in the building basement.

4.7 Summary and Conclusions

The stormwater servicing achieves a release rate from the site to the minor system limited to the allowable release rate and contains up to the 1:100 year on site.

5.0 Erosion and Sedimentation Control

Erosion and sediment control measures, as outlined in the Ontario Ministry of Natural Resources (MNR) Guidelines on Erosion and Sediment Control for Urban Construction Sites, will be implemented to trap sediment on site. The following erosion and sediment control measures can be implemented during construction as shown on the Erosion and Sediment Control Plan (Drawing C04):

- Supply and installation of a silt fence barrier, as per OPSD 219.110.
- Supply and installation of siltsack or sentinel CB inserts between the frame and cover of catch basins and maintenance holes adjacent to the project area during construction, to prevent sediment from entering the sewer system.
- Stockpiling of material during construction is to be located along flat areas away from drainage paths. For material placed on sloped areas, stockpiles are to be enclosed with a silt fence to protect watercourses.
- All catch basins are to be equipped with sumps, inspected frequently, and cleaned as required.
- Temporary ICDs are to be placed blocking part of the sewer pipe in the connecting storm maintenance holes to eliminate construction debris from entering the existing storm sewer system. The ICDs are to be removed after the proposed storm sewers have been fully cleaned.

The proposed removal and reinstatement measures as well as the erosion control measures shall conform to the following documents:

- "Guidelines on Erosion and Sediment Control for Urban Construction Sites" published by Ontario Ministries of Natural Resources, Environment, Municipal Affairs, and Transportation & Communication, Association of Construction Authorities of Ontario and Urban Development Institute, Ontario, May 1987.
- "MTO Drainage Manual", Chapter F: "Erosion of Materials and Sediment Control", Ministry of Transportation & Communications, 1985.
- "Erosion and Sediment Control" Training Manual by Ministry of Environment, Spring 1998.
- Applicable Regulations and Guidelines of the Ministry of Natural Resources.

This report has been prepared by J.L. Richards & Associates Limited for Minto Communities Inc.'s exclusive use. Its discussions and conclusions are summary in nature and cannot properly be used, interpreted or extended to other purposes without a detailed understanding and discussions with the client as to its mandated purpose, scope and limitations. This report is based on information, drawings, data, or reports provided by the named client, its agents, and certain other suppliers or third parties, as applicable, and relies upon the accuracy and completeness of such information. Any inaccuracy or omissions in information provided, or changes to applications, designs, or materials may have a significant impact on the accuracy, reliability, findings, or conclusions of this report.

This report was prepared for the sole benefit and use of the named client and may not be used or relied on by any other party without the express written consent of J.L. Richards & Associates Limited, and anyone intending to rely upon this report is advised to contact J.L. Richards & Associates Limited in order to obtain permission and to ensure that the report is suitable for their purpose.

J.L. RICHARDS & ASSOCIATES LIMITED

Water and Wastewater
Prepared by:

Felipe Abello
Engineering Graduate

Reviewed by:

LICENSED PROFESSIONAL ENGINEER
K.R. FERREY MORENO
100122432
2024-09-27
PROVINCE OF ONTARIO

Karla Ferrey, P.Eng.,
Senior Associate, Manager, Ottawa, Civil Development, Senior Civil Engineer

Stormwater
Prepared by:

Mathieu Lacelle, EIT
Engineering Graduate

Reviewed by:

LICENSED PROFESSIONAL ENGINEER
J.R. PETTIGREW
100207693
September 26, 2024
PROVINCE OF ONTARIO

Bobby Pettigrew, P. Eng.,
Associate, Senior Water Resources Engineer, Water Resources Practice Lead

Appendix A

Concept Plan, Draft Plan of Subdivision and Topographical Survey

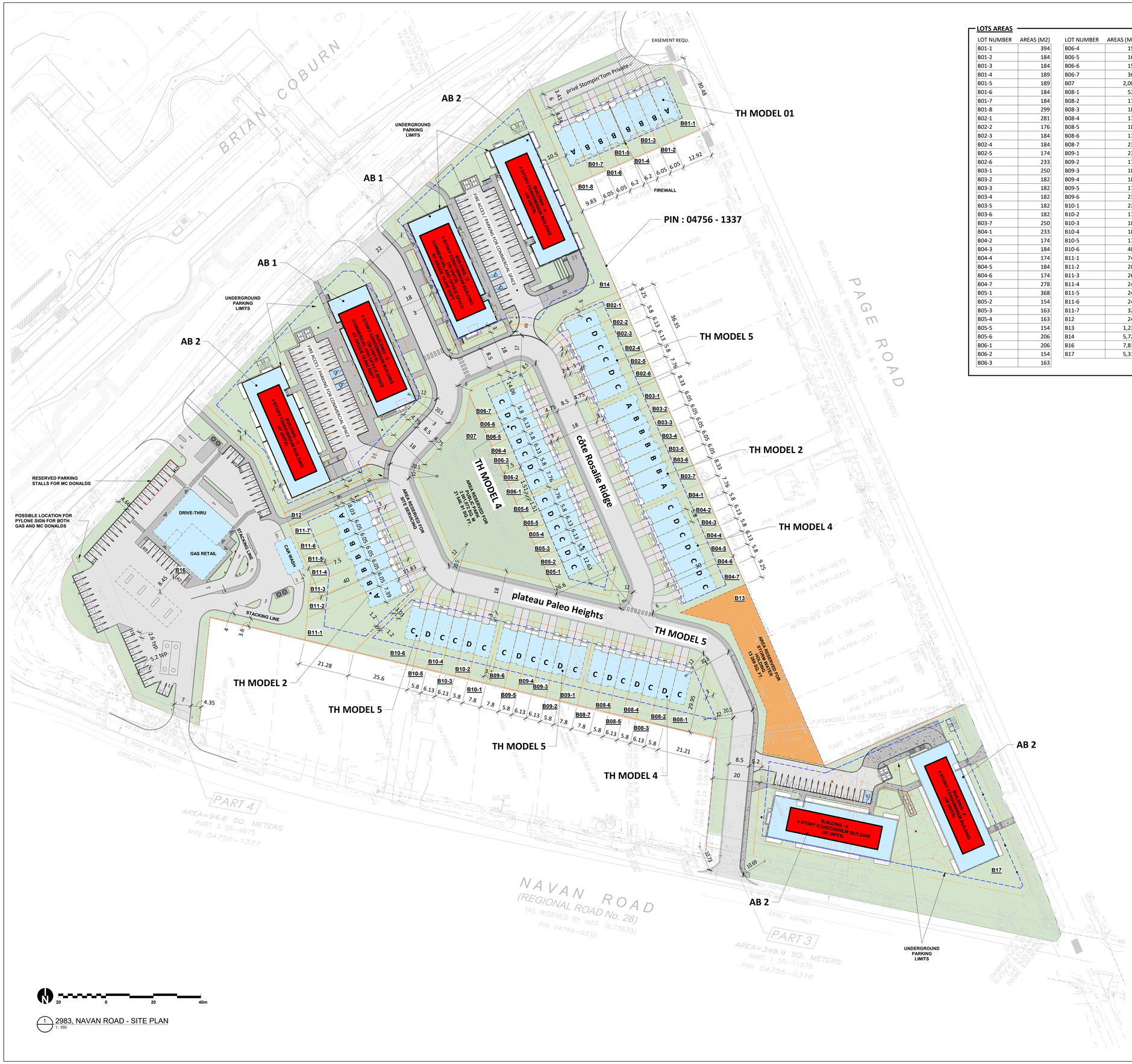

1 2983, NAVAN ROAD - SITE PLAN
1 : 550

LOTS AREAS

LOT NUMBER	AREAS (M2)	LOT NUMBER	AREAS (M2)
B01-1	394	B06-4	154
B01-2	184	B06-5	163
B01-3	184	B06-6	154
B01-4	189	B06-7	369
B01-5	189	B07	2,002
B01-6	184	B08-1	525
B01-7	184	B08-2	174
B01-8	299	B08-3	184
B02-1	281	B08-4	174
B02-2	176	B08-5	184
B02-3	184	B08-6	174
B02-4	184	B08-7	234
B02-5	174	B09-1	234
B02-6	233	B09-2	174
B03-1	250	B09-3	184
B03-2	182	B09-4	184
B03-3	182	B09-5	174
B03-4	182	B09-6	234
B03-5	182	B10-1	234
B03-6	182	B10-2	174
B03-7	250	B10-3	184
B04-1	233	B10-4	184
B04-2	174	B10-5	174
B04-3	184	B10-6	487
B04-4	174	B11-1	748
B04-5	184	B11-2	286
B04-6	174	B11-3	265
B04-7	278	B11-4	246
B05-1	368	B11-5	242
B05-2	154	B11-6	242
B05-3	163	B11-7	321
B05-4	163	B12	240
B05-5	154	B13	1,232
B05-6	206	B14	5,728
B06-1	206	B16	7,811
B06-2	154	B17	5,312
B06-3	163		

SITE PLAN LEGEND

EXISTING BUILDING	LOT LINE
NEW BUILDING	SETBACKS
NEW BUILDING WITH COMMERCIAL SPACE AT-GRADE	NEW TREE
GRASS	FIREWALL
ASPHALT	SIDEWALK

SITE INFORMATION & DEVELOPMENT STATISTICS

LOTS	PIN
	04756 - 0303
	04756 - 0315
	04756 - 0316
	04756 - 1337
ZONING	GM[2546] H(14.5)

SITE AREA		
TOTAL SITE AREA:	~53,441.14 m²	(5.34ha)
TOTAL DEVELOPABLE AREA:	~45,956.28 m²	(4.59ha)
NET SITE AREA:	~38,956.28 m²	(3.89ha)

UNITS	
TOWNHOUSES:	
MAIN UNIT:	67 UNITS
BASEMENT UNIT:	67 UNITS
TOTAL NUMBER OF UNITS:	134 UNITS
BLOCK 01:	
1 X RESIDENTIAL APARTMENT BUILDING	48 UNITS
1 X MIXED USE BUILDING	
RESIDENTIAL:	36 UNITS
COMMERCIAL SPACES:	~899 m²
BLOCK 02:	
1 X RESIDENTIAL APARTMENT BUILDING	47 UNITS
1 X MIXED USE BUILDING	
RESIDENTIAL:	36 UNITS
COMMERCIAL SPACES:	~899 m²
BLOCK 03:	
2 X RESIDENTIAL APARTMENT BUILDING	96 UNITS
TOTAL NUMBER OF UNITS:	397 UNITS
TOTAL COMMERCIAL SPACES:	~1,798 m²

	REQUIRED	PROVIDED
MAXIMUM DENSITY	NO MAX.	102 units/net ha
MINIMUM LOT WIDTH	NO MIN.	5.8 m
MINIMUM LOT AREA	NO MIN.	174 m²
MAXIMUM BUILDING HEIGHT	14.5 m	14.5 m
SETBACKS		
MINIMUM FRONT YARD:	3 m	3 m
MINIMUM CORNER SIDE YARD:	3 m	3 m
MINIMUM INTERIOR SIDE YARD:		
NON-RESIDENTIAL OR MIXED-USE:	5 m	5 m
LOW-RISE RESIDENTIAL :	1.2 m	1.2 m
MID-RISE RESIDENTIAL :	3 m	3 m
MINIMIM REAR YARD:		
ABUTTING A STREET:	3 m	3 m
FROM A RESIDENTIAL ZONE:	7.5 m	7.5 m
FOR A RESIDENTIAL BUILDING:	7.5 m	7.5 m
PARKING RATES		
R9 - TOWNHOUSES:	1 p/main unit = 67	67 (GARAGES)
VISITOR:	0	67 DRIVE AISLES
BLOCK 14:		
R12 - APARTEMENTS	1.0 p/unit = 84	84 (UNDERGROUND)
VISITOR:	0.2 p/unit = 17	18 (UNDERGROUND)
N79 - RETAIL STORE:	3.4 p/100 m² GFA = 30.6	32 (EXTERIOR)
		TOTAL: 134
BLOCK 15:		
R12 - APARTEMENTS	1.0 p/unit = 83	83 (UNDERGROUND)
VISITOR:	0.2 p/unit = 16.6	16 (UNDERGROUND)
N79 - RETAIL STORE:	3.4 p/100 m² GFA = 30.6	32 (EXTERIOR)
		TOTAL: 131
BLOCK 17:		
R12 - APARTEMENTS	1.0 p/unit = 96	96 (UNDERGROUND)
VISITOR:	0.2 p/unit = 19.2	19 (15 EXT. + 4 UND.)
		TOTAL: 115

GROSS FLOOR AREA	
TOWNHOUSE A:	267 m²
TOWNHOUSE B:	239 m²
TOWNHOUSE C:	232 m²
TOWNHOUSE C (CORNER UNIT):	236 m²
TOWNHOUSE D:	225 m²
TOTAL MODEL 01 (ABBBBBBA)	1,968 m²
TOTAL MODEL 02 (ABBBBBA)	1,729 m²
TOTAL MODEL 03 (ABBBBA)	1,490 m²
TOTAL MODEL 04 (CDCDCDC)	1,611 m²
TOTAL MODEL 05 (CDCCDC)	1,386 m²
MIXED USE BUILDING (TOTAL OF 2 BUILDINGS):	TOTAL: 3,926 m²
RESIDENTIAL:	3,027 m²
COMMERCIAL:	899 m²
RESIDENTIAL APARTMENT BUILDING (TOTAL OF 4 BUILDINGS) :	TOTAL: 3,927 m²
RESIDENTIAL:	3,927 m²

NOTE

1. ASSUMES TYPICAL RESIDENTIAL FLOOR HEIGHT OF 3m.
2. THE BASE PLAN (LOT LINES, EXISTING ROADS AND SURROUNDING AREAS) IS BASED ON THE TOPOGRAPHICAL PLAN OF SURVEY, SURVEYED STANTEC GEOMATICS LTD.
3. DISTANCES SHOWN ON THIS PLAN ARE IN METRES AND CAN BE CONVERTED TO FEET BY DIVIDING BY 0,3048.

PROJECT

NAVAN ROAD DEVELOPMENT

2983, Navan Road, Orleans, ON K1C 7G4

OWNER

GROUPE Heafey GROUP
768, BOUL. SAINT-JOSEPH, SUITE 100
GATINEAU, QC J8Y 4B8

ARCHITECTURAL

PMA ARCHITECTES
(418) 651-8959
INFO@PMAARCHITECTES.COM
3070, CHEMIN DES QUATRE-BOURGEOIS
QUÉBEC (QC) G1W 2K4
PMAARCHITECTES.COM

L'Atelier architectes
53, BOUL. SAINT-RAYMOND,
GATINEAU, QC J8Y 1R8

CIVIL ENGINEERS / PLANNER

J.L.Richards
ENGINEERS · ARCHITECTS · PLANNERS
1565 CARLING AVENUE, SUITE 700,
OTTAWA, ON K1Z 8R1

MECHANICAL & ELECTRICAL ENGINEERS

M&E ENGINEERING
9 GURDWARA ROAD, UNIT 200,
OTTAWA, ON K2E 7X6

SURVEYOR

Stantec
1331 CLYDE AVENUE, SUITE 400,
OTTAWA, ON K2C 3G4

ARCHITECT SEAL

REVISIONS

NO	DESCRIPTION	DATE
12	FOR CITY REVIEW	2024-08-20
11	FOR CITY REVIEW	2024-07-17
10	FOR CITY REVIEW	2024-03-25
9	FOR CITY REVIEW	2024-03-04
8	FOR CITY REVIEW	2022-11-28
7	FOR COORDINATION	2022-11-08
6	FOR COORDINATION	2022-11-01
5	FOR COORDINATION	2022-04-14
4	FOR COORDINATION	2021-11-03
3	FOR COORDINATION	2021-08-30
2	FOR COORDINATION	2021-08-20
1	FOR COORDINATION	2021-08-18

NOTE

IT IS THE RESPONSIBILITY OF THE APPROPRIATE CONTRACTOR TO CHECK AND VERIFY ALL DIMENSIONS ON THE SITE AND TO REPORT ALL ERRORS AND/OR OMISSIONS TO THE ARCHITECT. ALL CONTRACTORS MUST COMPLY WITH ALL PERTINENT CODES AND BY-LAWS. DO NOT SCALE DRAWINGS.

THIS DOCUMENT AND ITS CONTENT IS COPYRIGHTED. ANY REPRODUCTION IS PROHIBITED UNLESS GRANTED BY THE ARCHITECT.

DO NOT USE FOR CONSTRUCTION

DATE	DESIGNED
2024-08-20	P.POMERLEAU
	DRAWN
	P.POMERLEAU
PROJECT No	CHECKED
20054	P.MARTIN

SHEET TITLE

GLOBAL SITE PLAN

SHEET No

A100

Autodesk Docs://NAVAN ROAD/20054_DEV-NAVAN_SITE_PLAN_R24.rvt

PLAN 4M-

I CERTIFY THAT THIS PLAN IS REGISTERED IN THE LAND REGISTRY OFFICE FOR THE LAND TITLES DIVISION OF OTTAWA-CARLETON (No.4) AT_____ O'CLOCK ON THE_____ DAY OF _____, 2024 AND ENTERED IN THE REGISTER FOR P.I.N.'s 04756-0303, 04756-0315, 04756-0316 & 04756-1337, AND THE REQUIRED CONSENTS ARE REGISTERED AS PLAN DOCUMENT NUMBER OC-_____.

REPRESENTATIVE FOR LAND REGISTRAR

THIS PLAN COMPRISES OF ALL OF PINS 04756-0315, 04756-0316, 04756-1337, 04756-1344 AND PART OF PIN 04756-0324.

APPROVED UNDER SECTION 51 OF THE PLANNING ACT BY THE CITY OF OTTAWA THIS ____ DAY OF _____, 20__

VIVI CHI, INTERIM GENERAL MANAGER PLANNING, PLANNING, DEVELOPMENT AND BUILDING SERVICES DEPARTMENT, CITY OF OTTAWA

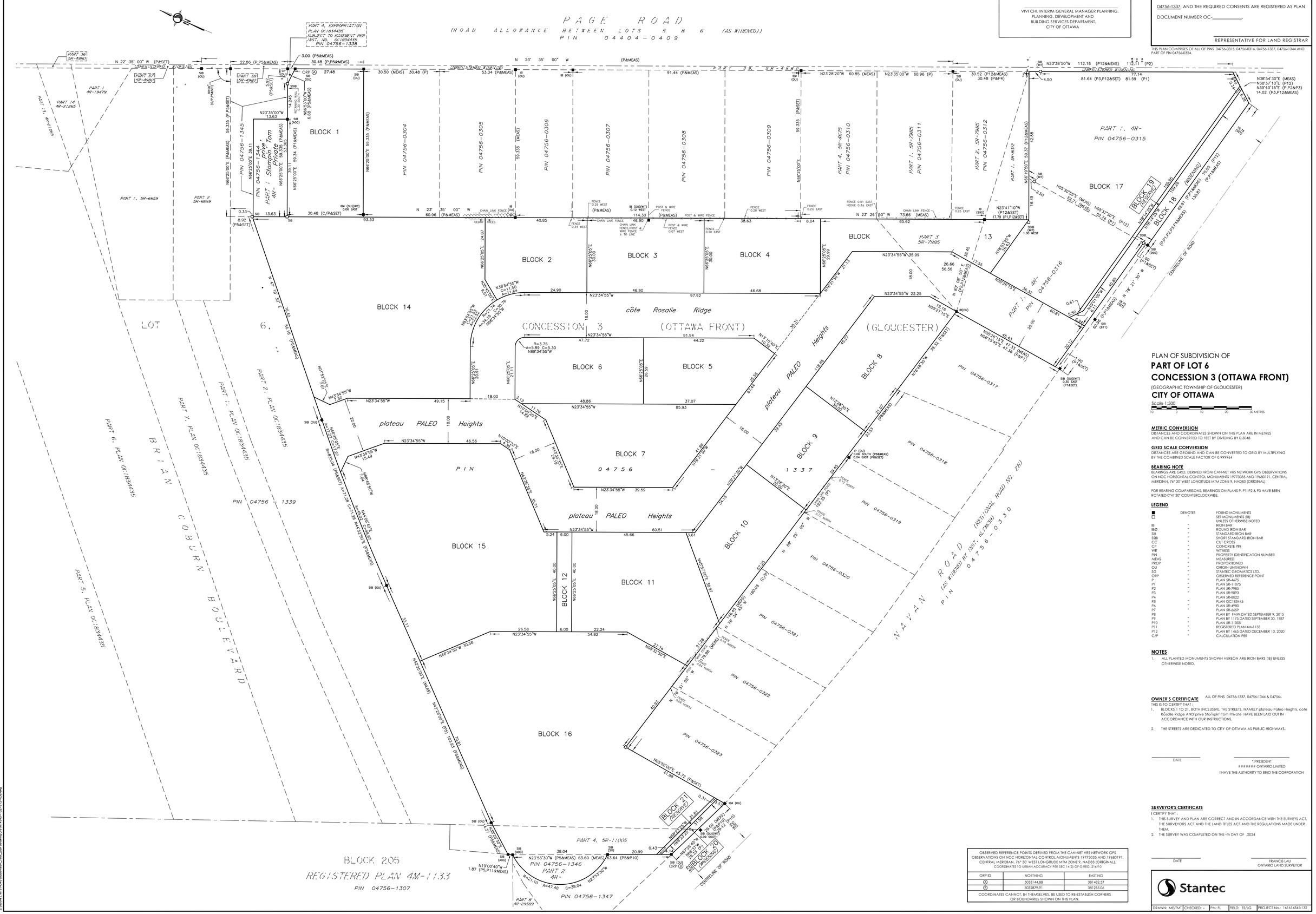

PLAN OF SUBDIVISION OF

PART OF LOT 6
CONCESSION 3 (OTTAWA FRONT)

(GEOGRAPHIC TOWNSHIP OF GLOUCESTER)

CITY OF OTTAWA

Scale 1:500

10 0 10 20 30 METRES

METRIC CONVERSION

DISTANCES AND COORDINATES SHOWN ON THIS PLAN ARE IN METRES AND CAN BE CONVERTED TO FEET BY DIVIDING BY 0.3048

GRID SCALE CONVERSION

DISTANCES ARE GROUND AND CAN BE CONVERTED TO GRID BY MULTIPLYING BY THE COMBINED SCALE FACTOR OF 0.999964

BEARING NOTE

BEARINGS ARE GRID, DERIVED FROM CANNET VRS NETWORK GPS OBSERVATIONS ON NCC HORIZONTAL CONTROL MONUMENTS 19773035 AND 19680191, CENTRAL MERIDIAN, 76° 30' WEST LONGITUDE MTM ZONE 9, NAD83 (ORIGINAL).

FOR BEARING COMPARISONS, BEARINGS ON PLANS P, P1, P2 & P3 HAVE BEEN ROTATED 0°41'30" COUNTERCLOCKWISE.

LEGEND

■	DENOTES	FOUND MONUMENTS
□	"	SET MONUMENTS (IB) UNLESS OTHERWISE NOTED
IB	"	IRON BAR
IBØ	"	ROUND IRON BAR
SIB	"	STANDARD IRON BAR
SSIB	"	SHORT STANDARD IRON BAR
CC	"	CUT CROSS
CP	"	CONCRETE PIN
WIT	"	WITNESS
PIN	"	PROPERTY IDENTIFICATION NUMBER
MEAS	"	MEASURED
PROP	"	PROPORTIONED
OU	"	ORIGIN UNKNOWN
SG	"	STANTEC GEOMATICS LTD.
ORP	"	OBSERVED REFERENCE POINT
P	"	PLAN SR-4675
P1	"	PLAN SR-11075
P2	"	PLAN SR-7985
P3	"	PLAN SR-9893
P4	"	PLAN SR-8022
P5	"	PLAN OC1834435
P6	"	PLAN SR-4980
P7	"	PLAN SR-6659
P8	"	PLAN BY FMW DATED SEPTEMBER 9, 2015
P9	"	PLAN BY 1175 DATED SEPTEMBER 30, 1987
P10	"	PLAN SR-1005
P11	"	REGISTERED PLAN 4M-1133
P12	"	PLAN BY 1465 DATED DECEMBER 10, 2020
C/P	"	CALCULATION PER

NOTES

1. ALL PLANTED MONUMENTS SHOWN HEREON ARE IRON BARS (IB) UNLESS OTHERWISE NOTED.

OWNER'S CERTIFICATE

ALL OF PINS 04756-1337, 04756-1344 & 04756-.

THIS IS TO CERTIFY THAT :

1. BLOCKS 1 TO 21, BOTH INCLUSIVE, THE STREETS, NAMELY plateau Paleo Heights, cote RÔsalie Ridge AND privé StoMpin' Tom Private HAVE BEEN LAID OUT IN ACCORDANCE WITH OUR INSTRUCTIONS.
2. THE STREETS ARE DEDICATED TO CITY OF OTTAWA AS PUBLIC HIGHWAYS.

DATE

* PRESIDENT
####### ONTARIO LIMITED
I HAVE THE AUTHORITY TO BIND THE CORPORATION

SURVEYOR'S CERTIFICATE

I CERTIFY THAT :

1. THIS SURVEY AND PLAN ARE CORRECT AND IN ACCORDANCE WITH THE SURVEYS ACT, THE SURVEYORS ACT AND THE LAND TITLES ACT AND THE REGULATIONS MADE UNDER THEM.
2. THE SURVEY WAS COMPLETED ON THE -th DAY OF .2024

DATE

FRANCIS LAU
ONTARIO LAND SURVEYOR

OBSERVED REFERENCE POINTS DERIVED FROM THE CANNET VRS NETWORK GPS OBSERVATIONS ON NCC HORIZONTAL CONTROL MONUMENTS 19773035 AND 19680191, CENTRAL MERIDIAN, 76° 30' WEST LONGITUDE MTM ZONE 9, NAD83 (ORIGINAL). COORDINATES TO URBAN ACCURACY PER SEC 14(2) OF O.REG. 216/10

ORP ID	NORTHING	EASTING
Ⓐ	5033144.88	381482.57
Ⓑ	5032879.91	381255.06

COORDINATES CANNOT, IN THEMSELVES, BE USED TO RE-ESTABLISH CORNERS OR BOUNDARIES SHOWN ON THIS PLAN.

Stantec

DRAWN: ME/TMT	CHECKED: -	PM: PL	FIELD: ES/LG	PROJECT No.: 161614345-132

September 10, 2024

Z:\active\161614345\solution_final_plan\plans\161614345-132-s12-v34.dwg

ASSOCIATION OF ONTARIO LAND SURVEYORS
PLAN SUBMISSION FORM
2048683

THIS PLAN IS NOT VALID UNLESS IT IS AN EMBOSSED ORIGINAL COPY ISSUED BY THE SURVEYOR
In accordance with Regulation 1026, Revised 2021

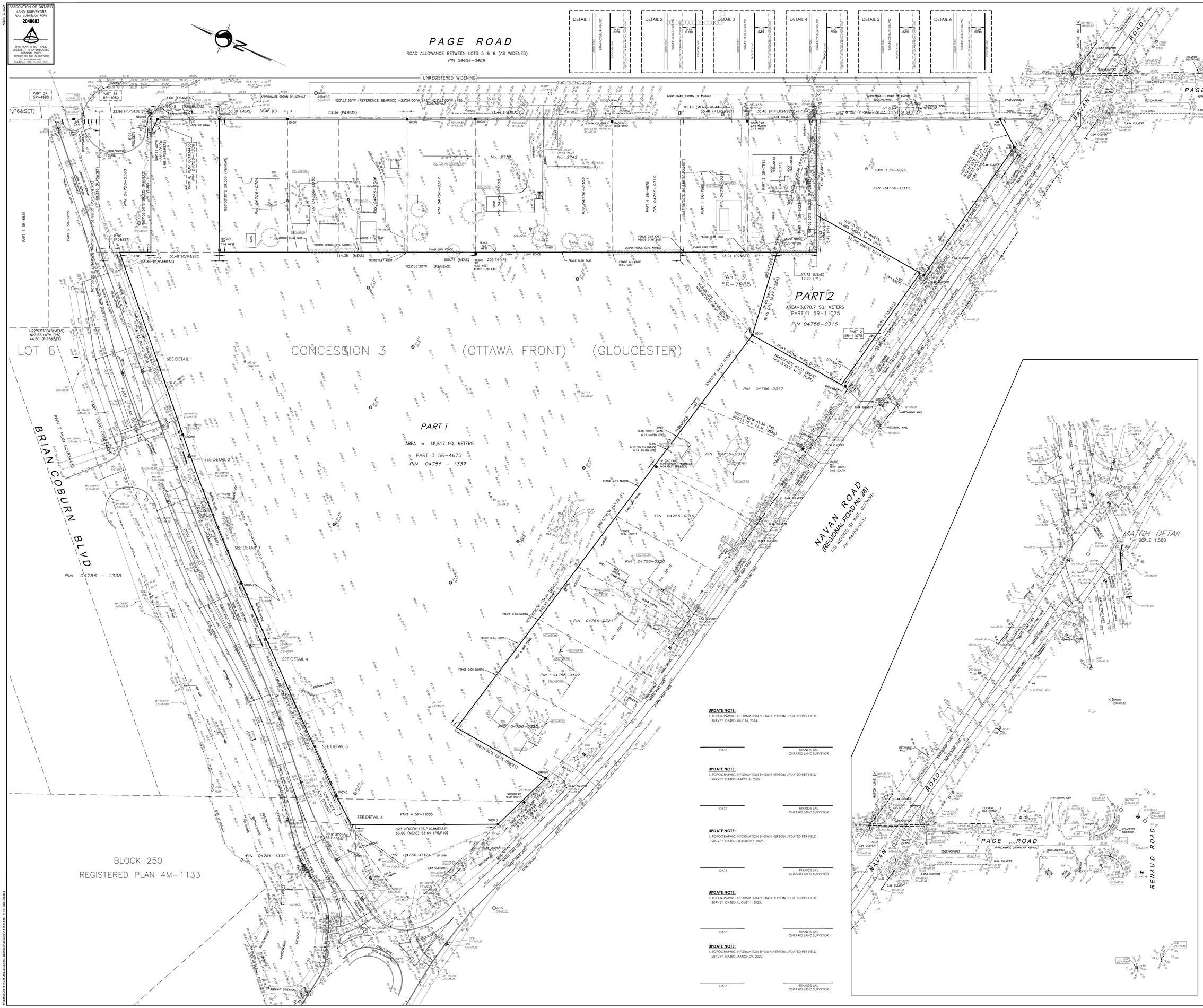

UPDATE NOTE:
1. TOPOGRAPHIC INFORMATION SHOWN HEREON UPDATED PER FIELD SURVEY DATED JULY 26, 2024.

DATE	FRANCIS LAU ONTARIO LAND SURVEYOR

UPDATE NOTE:
1. TOPOGRAPHIC INFORMATION SHOWN HEREON UPDATED PER FIELD SURVEY DATED MARCH 8, 2024.

DATE	FRANCIS LAU ONTARIO LAND SURVEYOR

UPDATE NOTE:
1. TOPOGRAPHIC INFORMATION SHOWN HEREON UPDATED PER FIELD SURVEY DATED OCTOBER 5, 2023.

DATE	FRANCIS LAU ONTARIO LAND SURVEYOR

UPDATE NOTE:
1. TOPOGRAPHIC INFORMATION SHOWN HEREON UPDATED PER FIELD SURVEY DATED AUGUST 1, 2023.

DATE	FRANCIS LAU ONTARIO LAND SURVEYOR

UPDATE NOTE:
1. TOPOGRAPHIC INFORMATION SHOWN HEREON UPDATED PER FIELD SURVEY DATED MARCH 29, 2022.

DATE	FRANCIS LAU ONTARIO LAND SURVEYOR

TOPOGRAPHIC SKETCH OF

PART OF LOT 6
CONCESSION 3 (OTTAWA FRONT)

[GEOGRAPHIC TOWNSHIP OF GLOUCESTER]

CITY OF OTTAWA

Scale 1:500

0 5 10 15 20 30 METRES

METRIC CONVERSION
DISTANCES AND COORDINATES SHOWN ON THIS PLAN ARE IN METRES AND CAN BE CONVERTED TO FEET BY DIVIDING BY 0.3048

GRID SCALE CONVERSION
DISTANCES ARE GROUND AND CAN BE CONVERTED TO GRID BY MULTIPLYING BY THE COMBINED SCALE FACTOR OF 0.999964

BEARING NOTE
BEARINGS ARE ASTRONOMIC AND ARE REFERRED TO THE WESTERLY LIMIT OF PAGE ROAD, AS SHOWN ON PLAN SR-4980, HAVING A BEARING OF N22°53'30"W.

A BEARING ROTATION CLOCKWISE OF 0°41'20" HAVE BEEN APPLIED TO BEARINGS SHOWN ON P5, P6, AND P7.

ELEVATION NOTE
ELEVATIONS SHOWN HEREON ARE GEODETIC (CGVD-1928:1978) AND ARE DERIVED FROM THE CAN-NET VRS NETWORK.

LEGEND (IF APPLICABLE)

■	DENOTES	FOUND MONUMENTS
□	-	SET MONUMENTS
IB	-	IRON BAR
IBØ	-	ROUND IRON BAR
SIB	-	STANDARD IRON BAR
SSIB	-	SHORT STANDARD IRON BAR
CC	-	CUT CROSS
CP	-	CONCRETE PIN
WIT	-	WITNESS
PIN	-	PROPERTY IDENTIFICATION NUMBER
MEAS	-	MEASURED
PROP	-	PROPORTIONED
OU	-	ORIGIN UNKNOWN
SG	-	STANTEC GEOMATICS LTD.
ORP	-	OBSERVED REFERENCE POINT
P	-	PLAN SR-4675
P1	-	PLAN SR-11075
P2	-	PLAN SR-7985
P3	-	PLAN SR-9893
P4	-	PLAN SR-8022
P5	-	PLAN OC1835435
P6	-	PLAN SR-4980
P7	-	PLAN SR-6659
P8	-	PLAN BY FMW DATED SEPTEMBER 9, 2015
P9	-	PLAN BY 1175 DATED SEPTEMBER 30, 1987
P10	-	PLAN SR-11005
P11	-	REGISTERED PLAN 4M-1133
C/P	-	CALCULATION PER
ACU	-	AIR CONDITIONING UNIT
AN	-	ANCHOR
AP	-	AIR PUMP
ANT	-	ANTENNA
BH	-	BOREHOLE
BIB	-	HOSE BIB
BKR	-	BIKE RACK
BENCH	-	BENCH
BOL	-	BOLLARD
BOUL	-	BOULDER
CB	-	CATCH BASIN
DCB	-	DOUBLE CB
DICB	-	DITCH CB
CBMH	-	CB MANHOLE
DCBMH	-	DOUBLE CB MANHOLE
CBSI	-	SIDE INLET CB
CHM	-	CHIMNEY
CSV	-	VALVE CURB STOP
DRN	-	DRAIN
EPOST	-	ELECTRICAL OUTLET
FP	-	FLAG POLE
FL	-	FLOOD LIGHT
FTF	-	FUEL TANK FILLER CAP
GC	-	GARBAGE CAN
GFL	-	PIPE FLANGE (GAS)
GFP	-	GAS FUEL PUMP
GP	-	POLE GUYWIRE
GSR	-	GAS SERVICE REGULATOR
GV	-	GAS VALVE
HC	-	HICKENBOTTOM
HDS	-	HEADSTONE
HLS	-	LIGHT STANDARD HYDRO
HM	-	HYDRO METER
HTN	-	HYDRO TRANSFORMER
HW	-	HAND WELL
HYD	-	FIRE HYDRANT
JBX	-	JUNCTION BOX
MB	-	MAILBOX
MP	-	MONITORING PIN
MH	-	MAINTENANCE HOLE UNIDENTIFIED
MHBELL	-	MAINTENANCE HOLE BELL
MHF	-	MAINTENANCE HOLE FIBRE OPTIC
MHH	-	MAINTENANCE HOLE HYDRO
MHI	-	MAINTENANCE HOLE INVERT
MHSAN	-	MAINTENANCE HOLE SANITARY
MHSTM	-	MAINTENANCE HOLE STORM
MHT	-	MAINTENANCE HOLE TRAFFIC
MW	-	MONITORING WELL
NPB	-	NEWS PAPER BOX
OLP	-	LIGHT STANDARD ORNAMENTAL
OW	-	OBSERVATION WELL
PKM	-	PARKING METER
PLBX	-	PULL BOX
PLQ	-	PLAQUE
PLR	-	PILLAR
PZ	-	PIEZOMETER
RLC	-	RED LIGHT CAMERA
RWSL	-	RAILWAY SIGNAL LIGHT
RWSS	-	RAILWAY SWITCH STAND
SAT	-	SATELLITE DISH
SCLP	-	SCULPTURE
SCP	-	SUMP/CATCH PIT
SCV	-	SPRINKLER CONTROL VALVE
SH	-	SPRINKLER HEAD
SM	-	SIAMESE CONNECTION
SN	-	SIGN
SPMV	-	SOLAR PANEL
SPT	-	SEPTIC TANK LID
TBL	-	TABLE
TB BELL	-	TERMINAL BOX - BELL
TB CATV	-	TERMINAL BOX - CABLE
TCB	-	TRAFFIC CONTROL BOX
TPIT	-	TEST PIT
TSL	-	TRAFFIC SIGNAL LIGHT
UMB	-	MARKER BELL UNDERGROUND
UMC	-	MARKER CABLE UNDERGROUND
G	-	NATURAL GAS LOCATE
UMO	-	MARKER OIL UNDERGROUND
UP	-	UTILITY POLE
VB	-	VALVE BOX
VC	-	VALVE CHAMBER
WV	-	WATER VALVE
_cm	-	TREE CONIFEROUS Ø _centimetres
_cm	-	TREE DECIDUOUS Ø _centimetres

SURVEYOR'S CERTIFICATE
I CERTIFY THAT :
1. THIS SURVEY AND PLAN ARE CORRECT AND IN ACCORDANCE WITH THE SURVEYS ACT, THE SURVEYORS ACT AND THE REGULATIONS MADE UNDER THEM.
2. THE SURVEY WAS COMPLETED ON THE 14th DAY OF DECEMBER, 2020.

DATE	FRANCIS LAU ONTARIO LAND SURVEYOR

© Copyright 2024 Stantec Geomatics Ltd. The reproduction, alteration or use of this REPORT in whole or in part without the express permission of Stantec Geomatics Ltd. is STRICTLY PROHIBITED.

SRD COORDS: X= 381388 Y= 5032979

Stantec
Stantec Geomatics Ltd.
CANADA LAND SURVEYORS
ONTARIO LAND SURVEYORS
1331 CLYDE AVENUE, SUITE 400
OTTAWA, ONTARIO, K2C 3G4
TEL. 613.722.4420 FAX. 613.722.2799
stantec.com

DRAWN: ME	CHECKED: KJ	PM: AB	FIELD: CA\SJ	PROJECT No.: 161614345-111A

August 8, 2024

Appendix B

Pre Consultation Meeting
Notes and Site Servicing Report
Checklist

File No.: PC2023-0226

Carmine Zayoun
12714001 Canada Inc (Zayoun Group)
Via email: carmine@zayoungroup.com

Subject: **Pre-Consultation: Meeting Feedback**
Proposed Site Plan Application – 2983 Navan Road
Four residential and two mixed-use buildings – PC2023-0226

Please find below information regarding next steps as well as consolidated comments from the above-noted pre-consultation meeting held on September 13, 2023.

Pre-Consultation Preliminary Assessment

1 ☐	**2** ☐	**3** ☐	**4** ☒	**5** ☐

One (1) indicates that considerable major revisions are required while five (5) suggests that the proposal appears to meet the City's key land use policies and guidelines. This assessment is purely advisory and does not consider technical aspects of the proposal or in any way guarantee application approval.

Next Steps

1. A review of the proposal and materials submitted for the above-noted pre-consultation has been undertaken. Please proceed to complete a Phase 2 / Phase 3 Pre-consultation Application Form and submit it together with the necessary studies and/or plans to planningcirculations@ottawa.ca.

2. In your subsequent pre-consultation submission, please ensure that all comments or issues detailed herein are addressed. A detailed cover letter stating how each issue has been addressed must be included with the submission materials. Please coordinate the numbering of your responses within the cover letter with the comment number(s) herein.

3. Please note, if your development proposal changes significantly in scope, design, or density before the Phase 3 pre-consultation, you may be required to complete or repeat the Phase 2 pre-consultation process.

Supporting Information and Material Requirements

1. The attached **Study and Plan Identification List** outlines the information and material that has been identified, during this phase of pre-consultation, as either required (R) or advised (A) as part of a future complete application submission.

    a. The required plans and studies must meet the City's Terms of Reference (ToR) and/or Guidelines, as available on Ottawa.ca. These ToR and Guidelines outline

the specific requirements that must be met for each plan or study to be deemed adequate.

Consultation with Technical Agencies

1. You are encouraged to consult with technical agencies early in the development process and throughout the development of your project concept. A list of technical agencies and their contact information is enclosed.

Planning

Comments:

1. In the Official Plan the subject site is designated as Neighbourhood is modified with the Evolving Neighbourhood overlay. Brian Coburn Boulevard is also designated as a Minor Corridor. The property is further identifed as Low-density residential in the EUC – Phases 1 Community Design Plans (CDP). The subject lands are currently zoned GM[2546]H(14.5) General Mixed-Use, Exception and DR Development Reserve.

2. Committee of Adjustment

No variances have been identified at this point. I would be supportive of reducing the parking requirement for the residential units if it will result in addition landscaping and tree cover. Staff will set up a meeting with a Committee of Adjustment Plan if any required.

3. Design guidelines

The following guidelines are meant as a starting place to help guide the design. I realize that they are specifically related to your project. Urban Design Guidelines for Low-rise Infill Housing

4. Landscape requirements

All required yards are to be landscaped with parking located between the buildings. Green spaces and tree canopy needs to be maximized.

5. Parking requirements

Parking should comply with Sections 100, 101, 106, 109 and 111

Vehicle and bicycle parking should be situated with easily access while minimizing pavement.

6. Easements

Will there be any easements required?

7. Commercial units should be orientated to the streets as much as possible.

8. Provide locations of signage and ensure that space is made available for tree planting

Urban Design

9. This proposal does not run along or does not meet the threshold in one of the City's Design Priority Areas and need not attend the City's UDRP. Staff will be responsible for evaluating the Urban Design Brief and providing design direction.

10. An Urban Design Brief is a required submittal Re-zoning applications. The Urban Design Brief should be structured by generally following the headings highlighted under Section 3 – Contents of these Terms of Reference. Please see the Urban Design Brief Terms of Reference provided.

11. We recommend further detail be provided about the low-rise apartments to better understand their relationship to the surrounding buildings and properties.

12. If this site is located outside the greenbelt, a shadow analysis will be required.

13. We recommend the low-rise buildings fronting City streets consider grade related units accessed from the street to further 'fit-in' with the surrounding low-rise residential community where feasible.

14. We recommend additional landscaping detail be provided around the low-rise apartments to better understand how the buildings relate to their context.

15. We recommend additional detail be provided of the front yards of the townhouse units facing City streets to better understand how they will integrate with the public realm.

16. We recommend tree planting in front yards facing public right-of-way.

17. When a wind and/or shadow studies are required please refer to the Terms of Reference for the wind analysis and shadow analysis to conduct the studies and evaluate the impacts.

18. Note. The Urban Design Brief submittal should have a section which addresses these pre-consultation comments.

This is an exciting project in an area full of potential. We look forward to helping you achieve its goals with the highest level of design resolution. We are happy to assist and answer any questions regarding the above. Feel free to contact the Urban Design Planner, Christopher Moise, at Christoper.Moise@ottawa.ca , for follow-up questions

Engineering

Comments:

19. The Stormwater Management Criteria, for the subject site, is to be based on the following:

    a. The 5-yr storm event using the IDF information derived from the Meteorological Services of Canada rainfall data, taken from the MacDonald Cartier Airport, collected 1966 to 1997.

    b. For separated sewer system built pre-1970 the design of the storm sewers are based on a 2 year storm.

    c. The pre-development runoff coefficient or a maximum equivalent 'C' of 0.5, whichever is less (§ 8.3.7.3).

    d. A calculated time of concentration (Cannot be less than 10 minutes).

    e. Flows to the storm sewer in excess of the 5-year storm release rate, up to and including the 100-year storm event, must be detained on site.

    f. For a combined sewer system the maximum C= 0.4 or the pre-development C value, whichever is less. In the absence of other information the allowable release rate shall be based on a 2 year storm event.

20. Deep Services (Storm, Sanitary & Water Supply)

    a. Provide existing servicing information and the recommended location for the proposed connections. Services should ideally be grouped in a common trench to minimize the number of road cuts.

    b. Connections to trunk sewers and easement sewers are typically not permitted.

    c. Provide information on the monitoring manhole requirements – should be located in an accessible location on private property near the property line (ie. Not in a parking area).

    d. Review provision of a high-level sewer.

e. Sewer connections to be made above the springline of the sewermain as per:

   i. Std Dwg S11.1 for flexible main sewers – connections made using approved tee or wye fittings.

   ii. Std Dwg S11 (For rigid main sewers) – lateral must be less that 50% the diameter of the sewermain,

   iii. Std Dwg S11.2 (for rigid main sewers using bell end insert method) – for larger diameter laterals where manufactured inserts are not available; lateral must be less that 50% the diameter of the sewermain,

   iv. Connections to manholes permitted when the connection is to rigid main sewers where the lateral exceeds 50% the diameter of the sewermain. – Connect obvert to obvert with the outlet pipe unless pipes are a similar size.

   v. No submerged outlet connections.

21. Water Boundary condition requests must include the location of the service (map or plan with connection location(s) indicated) and the expected loads required by the proposed development, including calculations. Please provide the following information:

    no BCR will be requested for res site plans, no watermains built, navan connection already provided as part of subdivision

    a. Location of service

    b. Type of development and the amount of fire flow required (as per FUS).

    c. Average daily demand: ___ l/s.

    d. Maximum daily demand: ___l/s.

    e. Maximum hourly daily demand: ___ l/s.

22. An MECP Environmental Compliance Approval **[Industrial Sewage Works or Municipal/Private Sewage Works]** will be required for the proposed development. Please contact the Ministry of the Environment, Conservation and Parks, Ottawa District Office to arrange a pre-submission consultation:

    a. Charlie Primeau at (613) 521-3450, ext. 251 or Charlie.Primeau@ontario.ca

    b. Emily Diamond at (613) 521-3450, ext. 238 or Emily.Diamond@ontario.ca

General Comments:

23. Review of the Phase 3 submission for this application will not occur until the detailed design of the subdivision that it is within (D07-16-21-0027) is approved.

24. At the stage of site plan approval, a condition will be imposed detailing that a commence work notification will not be issued until the subdivision's infrastructure is in-service.

25. Engineering Studies:

26. All engineering studies (detailed in the Study and Plan Identification List form) are to follow the to be approved draft plan of subdivision D07-16-21-0027

Feel free to contact Derek Unrau, Infrastructure Project Manager, for follow-up questions.

Noise

Comments:

27. Noise report is required to identify and mitigate traffic noise from Brian Coburn Boulevard and Navan Road

Feel free to contact the Senior Transportation Engineer, Mike Giampa, at Mike.Giampa@ottawa.ca , for follow-up questions.

Transportation

Comments:

a. A full TIA is not required as this site is covered under the recent subdivision TIA.

b. A memo including the pertinent subdivision trips is sufficient.

c. The right of way protection on Brian Coburn and Navan Roads is 40m and 37.5m, respectively

Feel free to contact the Senior Transportation Engineer, Mike Giampa, at Mike.Giampa@ottawa.ca , for follow-up questions.

Planning Forestry

Comments:

28. A Tree Conservation Report and Landscape Plan must be submitted with both SPC applications

29. A permit is required prior to any tree removal on site. The tree permit will be released upon site plan approval. Please contact the File Lead or the Planning Forester, Hayley Murray (hayley.murray@ottawa.ca) for information on obtaining the tree permit.

30. If marine clay soils are present, setbacks on City properties must adhere to the 2017 SMC guidelines (attached). The Geotechnical report must address the implications of these soils, if present, on tree planting in relation to private land.

31. If underground parking is planned, a design must be provided for the site to support tree planting

32. We expect a very strong landscape plan to re-establish canopy cover across the properties. Tree planting and protecting existing urban forest canopy is imperative to reach the City's target of 40% canopy cover.

Feel free to contact Hayley Murray, Planning Forester, for follow-up questions.

Parkland

Comments:

33. Parkland contributions were made through the Subdivision process.

Feel free to contact Jessica Button, Parks Planner, for follow-up questions

Conservation Authority

Comments:

34. The Rideau Valley Conservation authority will be commenting on this application

Feel free to contact RVCA, for follow-up questions.
.

Other

35. The High Performance Development Standard (HPDS) is a collection of voluntary and required standards that raise the performance of new building projects to achieve sustainable and resilient design. The HPDS was passed by Council on April 13, 2022.

a. At this time, the HPDS is not in effect and Council has referred the 2023 HPDS Update Report back to staff with direction to bring forward an updated report to Committee with recommendations for revised phasing timelines, resource requirements and associated amendments to the Site Plan Control By-law by no later than Q1 2024.

b. Please refer to the HPDS information attached and ottawa.ca/HPDS for more information.

Submission Requirements and Fees

1. Outlines the application type/subtype required and the associated fees
    a. Additional information regarding fees related to planning applications can be found here.
2. The attached **Study and Plan Identification List** outlines the information and material that has been identified as either required (R) or advised (A) as part of a future complete application submission.
    a. The required plans and studies must meet the City's Terms of Reference (ToR) and/or Guidelines, as available on Ottawa.ca. These ToR and Guidelines outline the specific requirements that must be met for each plan or study to be deemed adequate.
3. All of the above comments or issues should be addressed to ensure the effectiveness of the application submission review.

Should there be any questions, please do not hesitate to contact myself or the contact identified for the above areas / disciplines.

Yours Truly,
Steve Belan

cc.
Tim Chadder
Raad Akrawi
Madelen Fellows
Karla Ferrey
Tatyana Roumie
Christopher Moise
Derek Unrau
Mike Giampa
Haley Murray
Jessica Button

12714001 Canada Inc – Mixed Use Site Plan (Block 17) 2983, 3053 and 3079 Navan Road & 2690 Pagé Road SITE SERVICING REPORT CHECKLIST	
REFERENCED STUDIES AND REPORTS	**REFERENCE**
Site Servicing Report for 12714001 Canada Inc, Residential Site Plan (Block 17) 2983, 3053 and 3079 Navan Road & 2690 Pagé Road (J.L. Richards & Associates Limited, August 16, 2024)	Site Servicing Report

4.1	GENERAL CONTENT	REFERENCE
☐	Executive Summary (for larger reports only).	N/A
☒	Date and revision number of the report.	Site Servicing Report
☒	Location map and plan showing municipal address, boundary, and layout of proposed development.	Site Servicing Report (Appendix A) All Drawings
☒	Plan showing the site and location of all existing services.	Servicing Plan
☒	Development statistics, land use, density, adherence to zoning and official plan, and reference to applicable subwatershed and watershed plans that provide context to which individual developments must adhere.	Site Servicing Report
☒	Summary of Pre-consultation Meetings with City and other approval agencies.	Site Servicing Report (Appendix 'B')
☒	Reference and confirm conformance to higher level studies and reports (Master Servicing Studies, Environmental Assessments, Community Design Plans), or in the case where it is not in conformance, the proponent must provide justification and develop a defendable design criteria.	Reference made to Stantec 2005 EUC ISSU
☒	Statement of objectives and servicing criteria.	Site Servicing Report
☒	Identification of existing and proposed infrastructure available in the immediate area.	Site Servicing Report Servicing Plan
☐	Identification of Environmentally Significant Areas, watercourses and Municipal Drains potentially impacted by the proposed development (Reference can be made to the Natural Heritage Studies, if available).	N/A

☒	Concept level master grading plan to confirm existing and proposed grades in the development. This is required to confirm the feasibility of proposed stormwater management and drainage, soil removal and fill constraints, and potential impacts to neighbouring properties. This is also required to confirm that the proposed grading will not impede existing major system flow paths.	Grading Plan
☐	Identification of potential impacts of proposed piped services on private services (such as wells and septic fields on adjacent lands) and mitigation required to address potential impacts.	N/A
☐	Proposed phasing of the development, if applicable.	N/A
☒	Reference to geotechnical studies and recommendations concerning servicing.	Site Servicing Report and Drawings
☒	All preliminary and formal site plan submissions should have the following information: ▪ Metric scale ▪ North arrow (including construction North) ▪ Key plan ▪ Name and contact information of applicant and property owner ▪ Property limits, including bearings and dimensions ▪ Existing and proposed structures and parking areas ▪ Easements, road widening and rights-of-way ▪ Adjacent street names	All Drawings

4.2	**SITE SERVICING REPORT: WATER**	**REFERENCE**
☐	Confirm consistency with Master Servicing Study, if available.	N/A
☒	Availability of public infrastructure to service proposed development.	Site Servicing Report (Section 2.0) Servicing Plan
☒	Identification of system constraints.	Site Servicing Report (Section 2.0) Servicing Plan
☒	Identify boundary conditions.	Site Servicing Report (Section 2.0)
☒	Confirmation of adequate domestic supply and pressure.	Site Servicing Report (Section 2.0)
☒	Confirmation of adequate fire flow protection and confirmation that fire flow is calculated as per the Fire Underwriter's Survey. Output should show available fire flow at locations throughout the development.	Site Servicing Report (Section 2.0)
☒	Provide a check of high pressures. If pressure is found to be high, an assessment is required to confirm the application of pressure reducing valves.	Site Servicing Report (Section 2.0)

☐	Definition of phasing constraints. Hydraulic modelling is required to confirm servicing for all defined phases of the project, including the ultimate design.	N/A
☒	Address reliability requirements, such as appropriate location of shutoff valves.	Site Servicing Report (Section 2.0)
☐	Check on the necessity of a pressure zone boundary modification.	N/A
☒	Reference to water supply analysis to show that major infrastructure can deliver sufficient water for the proposed land use. This includes data that shows that the expected demands under average day, peak hour and fire flow conditions provide water within the required pressure range.	Site Servicing Report (Section 2.0)
☒	Description of the proposed water distribution network, including locations of proposed connections to the existing system, provisions for necessary looping, and appurtenances (valves, pressure reducing valves, valve chambers, and fire hydrants), including special metering provisions.	Site Servicing Report (Section 2.0) Servicing Plan
☐	Description of off-site required feedermains, booster pumping stations, and other water infrastructure that will be ultimately required to service proposed development, including financing, interim facilities, and timing of implementation.	N/A
☒	Confirmation that water demands are calculated based on the City of Ottawa Design Guidelines.	Site Servicing Report (Section 2.0)
☒	Provision of a model schematic showing the boundary conditions locations, streets, parcels, and building locations for reference.	Site Servicing Report (Section 2.0)

4.3	**SITE SERVICING REPORT: WASTEWATER**	**REFERENCE**
☒	Summary of proposed design criteria (Note: Wet weather flow criteria should not deviate from the City of Ottawa Sewer Design Guidelines. Monitored flow data from relatively new infrastructure cannot be used to justify capacity requirements for proposed infrastructure).	Site Servicing Report (Section 3.0,
☐	Confirm consistency with Master Servicing Study and/or justifications for deviations.	Stantec 2005 EUC ISSU
☐	Consideration of local conditions that may contribute to extraneous flows that are higher than the recommended flows in the Guidelines. This includes groundwater and soil conditions, and age and condition of sewers.	N/A
☒	Description of existing sanitary sewer available for discharge of wastewater from proposed development.	Site Servicing Report (Section 3.0) Servicing Plan

☒	Verify available capacity in downstream sanitary sewer and/or identification of upgrades necessary to service the proposed development. (Reference can be made to previously completed Master Servicing Study if applicable.)	Site Servicing Report (Section 3.0)
☒	Calculations related to dry weather and wet weather flow rates from the development in standard MOE sanitary sewer design table (Appendix 'C') format.	Site Servicing Report (Section 3.0)
☒	Description of proposed sewer network, including sewers, pumping stations and forcemains.	Site Servicing Report (Section 3.0) Servicing Plan
☐	Discussion of previously identified environmental constraints and impact on servicing (environmental constraints are related to limitations imposed on the development in order to preserve the physical condition of watercourses, vegetation, soil cover, as well as protecting against water quantity and quality).	N/A
☐	Pumping stations: impacts of proposed development on existing pumping stations or requirements for new pumping station to service development.	N/A
☐	Forcemain capacity in terms of operational redundancy, surge pressure and maximum flow velocity.	N/A
☐	Identification and implementation of the emergency overflow from sanitary pumping stations in relation to the hydraulic grade line to protect against basement flooding.	N/A
☐	Special considerations, such as contamination, corrosive environment, etc.	N/A

4.4	**SITE SERVICING REPORT: STORMWATER**	**REFERENCE**
☒	Description of drainage outlets and downstream constraints, including legality of outlets (i.e., municipal drain, right-of-way, watercourse, or private property).	Site Servicing Report (Section 4.0)
☒	Analysis of available capacity in existing public infrastructure.	Site Servicing Report (Section 4.0)
☒	A drawing showing the subject lands, its surroundings, the receiving watercourse, existing drainage patterns, and proposed drainage pattern.	Servicing, Grading and Drainage Plans
☒	Water quantity control objective (e.g. controlling post-development peak flows to pre-development level for storm events ranging from the 2 or 5 year event (dependent on the receiving sewer design) to 100 year return period); if other objectives are being applied, a rationale must be included with reference to hydrologic analyses of the potentially affected subwatersheds, taking into account long-term cumulative effects.	Site Servicing Report (Section 4.0)

☒	Water Quality control objective (basic, normal or enhanced level of protection based on the sensitivities of the receiving watercourse) and storage requirements.	Site Servicing Report (Section 4.0)
☒	Description of the stormwater management concept with facility locations and descriptions with references and supporting information.	Site Servicing Report (Section 4.0) Servicing, Grading and Drainage Plans
☐	Setback from private sewage disposal systems.	N/A
☐	Watercourse and hazard lands setbacks.	N/A
☒	Record of pre-consultation with the Ontario Ministry of Environment and the Conservation Authority that has jurisdiction on the affected watershed.	Site Servicing Report (Appendix 'B')
☐	Confirm consistency with subwatershed and Master Servicing Study, if applicable study exists.	Stantec 2005 EUC ISSU
☒	Storage requirements (complete with calculations) and conveyance capacity for minor events (1:2 year return period) and major events (1:100 year return period).	Site Servicing Report (Section 4.0)
☐	Identification of watercourses within the proposed development and how watercourses will be protected, or, if necessary, altered by the proposed development with applicable approvals.	N/A
☒	Calculate pre- and post-development peak flow rates, including a description of existing site conditions and proposed impervious areas and drainage catchments in comparison to existing conditions.	Site Servicing Report (Section 4.0)
☒	Any proposed diversion of drainage catchment areas from one outlet to another.	Site Servicing Report (Section 4.0)
☒	Proposed minor and major systems, including locations and sizes of stormwater trunk sewers, and stormwater management facilities.	Servicing, Grading and Drainage Plans
☐	If quantity control is not proposed, demonstration that downstream system has adequate capacity for the post-development flows up to and including the 100-year return period storm event.	Quantity control proposed per Site Servicing Report (Section 4.0)
☐	Identification of potential impacts to receiving watercourses.	N/A
☐	Identification of municipal drains and related approval requirements.	N/A
☒	Description of how the conveyance and storage capacity will be achieved for the development.	Site Servicing Report (Section 4.0)

☒	100 year flood levels and major flow routing to protect proposed development from flooding for establishing minimum building elevations (MBE) and overall grading.	Site Servicing Report (Section 4.0) Servicing, Grading and Drainage Plans
☒	Inclusion of hydraulic analysis, including hydraulic grade line elevations.	Site Servicing Report (Section 4.0)
☒	Description of approach to erosion and sediment control during construction for the protection of receiving watercourse or drainage corridors.	Site Servicing Report (Section 5.0) Servicing Plan
☐	Identification of floodplains – proponent to obtain relevant floodplain information from the appropriate Conservation Authority. The proponent may be required to delineate floodplain elevations to the satisfaction of the Conservation Authority if such information is not available or if information does not match current conditions.	N/A
☐	Identification of fill constraints related to floodplain and geotechnical investigation.	N/A

4.5	**APPROVAL AND PERMIT REQUIREMENTS**	**REFERENCE**
The Site Servicing Report shall provide a list of applicable permits and regulatory approvals necessary for the proposed development, as well as the relevant issues affecting such approval. The approval and permitting shall include but not be limited to the following:		
☐	Conservation Authority as the designated approval agency for modification of floodplain, potential impact on fish habitat, proposed works in or adjacent to a watercourse, cut/fill permits and Approval under Lakes and Rivers Improvement Act. The Conservation Authority is not the approval authority for the Lakes and Rivers Improvement Act. Where there are Conservation Authority regulations in place, approval under the Lakes and Rivers Improvement Act is not required, except in cases of dams, as defined in the Act.	N/A
☐	Application for Environmental Compliance Approval (ECA) under the Ontario Water Resources Act.	As part of future submission
☐	Changes to Municipal Drains.	N/A
☐	Other permits (National Capital Commission, Parks Canada, Public Works and Government Services Canada, Ministry of Transportation, etc.).	N/A

4.6	**CONCLUSION CHECKLIST**	**REFERENCE**
☒	Clearly stated conclusions and recommendations.	Site Servicing Report
☒	Comments received from review agencies, including the City of Ottawa and information on how the comments were addressed. Final sign-off from the responsible reviewing agency.	Not yet applicable

☒	All draft and final reports shall be signed and stamped by a Professional Engineer registered in Ontario.	Site Servicing Report All Drawings

Appendix C

Water Servicing

WATERMAIN DEMAND CALCULATION SHEET

PROJECT : NAVAN ROAD DEVELOPMENT PROJECT
LOCATION : CITY OF OTTAWA
DEVELOPER : 12714001 Canada Inc.

NODE	RESIDENTIAL UNITS Townhouses (TH)	RESIDENTIAL UNITS Condo Units (CU)	POP'N	NON-RESIDENTIAL COMM (ha.)	AVERAGE DAILY DEMAND (l/s) Res.	AVERAGE DAILY DEMAND (l/s) Non-res.	AVERAGE DAILY DEMAND (l/s) Total	MAXIMUM DAILY DEMAND (l/s) Res.	MAXIMUM DAILY DEMAND (l/s) Non-res.	MAXIMUM DAILY DEMAND (l/s) Total	PEAK HOUR DEMAND (l/s) Res.	PEAK HOUR DEMAND (l/s) Non-res.	PEAK HOUR DEMAND (l/s) Total
J-25	0	96	173	0.00	0.56	0.00	0.56	1.40	0.00	1.40	3.08	0.00	3.08
TOTALS	0	96	173	0.00	**0.56**	**0.00**	**0.56**	**1.40**	**0.00**	**1.40**	**3.08**	**0.00**	**3.08**

ASSUMPTIONS

RESIDENTIAL DENSITIES

- Townhouse (TH) 2.7 p / p / u
- Condo Units (CU) 1.8 p / p / u

p / p / u

p / p / u

AVG. DAILY DEMAND

- Residential 280 l / cap / day
- Institutional 28,000 l / ha / day
- Commercial 28,000 l / ha / day

MAX. DAILY DEMAND

- Residential 700 l / cap / day
- Institutional 42,000 l / ha / day
- Commercial 42,000 l / ha / day

MAX. HOURLY DEMAND

- Residential 1,540 l / cap / day
- Institutional 75,600 l / ha / day
- Commercial 75,600 l / ha / day

FUS Fire Flow Calculations

NAVAN ROAD DEVELOPMENT PROJECT - Commercial Building

(JLR 29899-002)

Step	Parameter	Value		Note
A	Type of Construction	Wood Frame		Building E (4 Story Mixed Use Condominium Building)
	Coefficient (C)	1.5		
B	Ground Floor Area	1067.77	m^2	
C	Height in storeys	4	storeys	Basements are excluded.
	Total Floor Area	4271.08	m^2	
D	Fire Flow Formula	F=220C√A		
	Fire Flow	21567	L/min	
	Rounded Fire Flow	22000	L/min	Flow rounded to nearest 1000 L/min.
E	Occupancy Class	Limited Combustible		Residential buildings have a limited combustible occupancy.
	Occupancy Charge	-15%		
	Occupancy Increase or Decrease	-3300		
	Fire Flow	18700	L/min	No rounding applied.
F	Sprinkler Protection	Automatic Fully Supervised		
	Sprinkler Credit	-50%		
	Decrease for Sprinkler	-9350	L/min	
G	*North Side Exposure*			
	Exposing Wall:	Wood Frame		
	Exposed Wall:	Wood Frame		
	Length of Exposed Wall:	38.8	m	
	Height of Exposed Wall:	1	storeys	
	Length-Height Factor	38.8	m-storeys	
	Separation Distance	39.47	m	
	North Side Exposure Charge	5%		
	East Side Exposure			
	Exposing Wall:	Wood Frame		
	Exposed Wall:	Wood Frame		
	Length of Exposed Wall:	24.9	m	
	Height of Exposed Wall:	4	storeys	
	Length-Height Factor	99.7	m-storeys	
	Separation Distance	17.15	m	
	East Side Exposure Charge	15%		
	South Side Exposure			
	Exposing Wall:			
	Exposed Wall:			
	Length of Exposed Wall:		m	
	Height of Exposed Wall:		storeys	
	Length-Height Factor	0.0	m-storeys	
	Separation Distance		m	
	South Side Exposure Charge	0%		
	West Side Exposure			
	Exposing Wall:	Wood Frame		
	Exposed Wall:	Wood Frame		
	Length of Exposed Wall:	10.4	m	
	Height of Exposed Wall:	1	storeys	
	Length-Height Factor	10.4	m-storeys	
	Separation Distance	42.94	m	
	West Side Exposure Charge	5%		
	Total Exposure Charge	25%		The total exposure charge is below the maximum value of 75%.
	Increase for Exposures	4675	L/min	
H	Fire Flow	14025	L/min	
	Rounded Fire Flow	14000	L/min	Flow rounded to nearest 1000 L/min.
City Cap	**Required Fire Flow (RFF)**	**14000**	**L/min**	
		233	**L/s**	

Fire Underwriters Survey (FUS) Fire Flow Calculations

In accordance with City of Ottawa Technical Bulletin ISTB-2018-02 dated March 21, 2018

FUS Fire Flow Calculations

NAVAN ROAD DEVELOPMENT PROJECT - Commercial Building

(JLR 29899-002)

Step	Parameter	Value		Note
A	Type of Construction	Wood Frame		Building F (4 Story Mixed Use Condominium Building)
	Coefficient (C)	1.5		
B	Ground Floor Area	1067.84	m^2	
C	Height in storeys	4	storeys	Basements are excluded.
	Total Floor Area	4271.36	m^2	
D	Fire Flow Formula	$F=220C\sqrt{A}$		
	Fire Flow	21567	L/min	
	Rounded Fire Flow	22000	L/min	Flow rounded to nearest 1000 L/min.
E	Occupancy Class	Limited Combustible		Residential buildings have a limited combustible occupancy.
	Occupancy Charge	-15%		
	Occupancy Increase or Decrease	-3300		
	Fire Flow	18700	L/min	No rounding applied.
F	Sprinkler Protection	Automatic Fully Supervised		
	Sprinkler Credit	-50%		
	Decrease for Sprinkler	-9350	L/min	
G	*North Side Exposure*			
	Exposing Wall:	Wood Frame		
	Exposed Wall:	Wood Frame		
	Length of Exposed Wall:	8.4	m	
	Height of Exposed Wall:	1	storeys	
	Length-Height Factor	8.4	m-storeys	
	Separation Distance	15.03	m	
	North Side Exposure Charge	12%		
	East Side Exposure			
	Exposing Wall:	Wood Frame		
	Exposed Wall:	Wood Frame		
	Length of Exposed Wall:	40.9	m	
	Height of Exposed Wall:	1	storeys	
	Length-Height Factor	40.9	m-storeys	
	Separation Distance	40.14561369	m	
	East Side Exposure Charge	5%		
	South Side Exposure			
	Exposing Wall:	Wood Frame		
	Exposed Wall:	Non-combustible		
	Length of Exposed Wall:		m	
	Height of Exposed Wall:		storeys	
	Length-Height Factor	0.0	m-storeys	
	Separation Distance		m	
	South Side Exposure Charge	0%		
	West Side Exposure			
	Exposing Wall:	Wood Frame		
	Exposed Wall:	Wood Frame		
	Length of Exposed Wall:	56.0	m	
	Height of Exposed Wall:	4	storeys	
	Length-Height Factor	223.8	m-storeys	
	Separation Distance	14.76	m	
	West Side Exposure Charge	15%		
	Total Exposure Charge	32%		The total exposure charge is below the maximum value of 75%.
	Increase for Exposures	5984	L/min	
H	Fire Flow	15334	L/min	
	Rounded Fire Flow	15000	L/min	Flow rounded to nearest 1000 L/min.
City Cap	**Required Fire Flow (RFF)**	**15000**	**L/min**	
		250	**L/s**	

Fire Underwriters Survey (FUS) Fire Flow Calculations

In accordance with City of Ottawa Technical Bulletin ISTB-2018-02 dated March 21, 2018

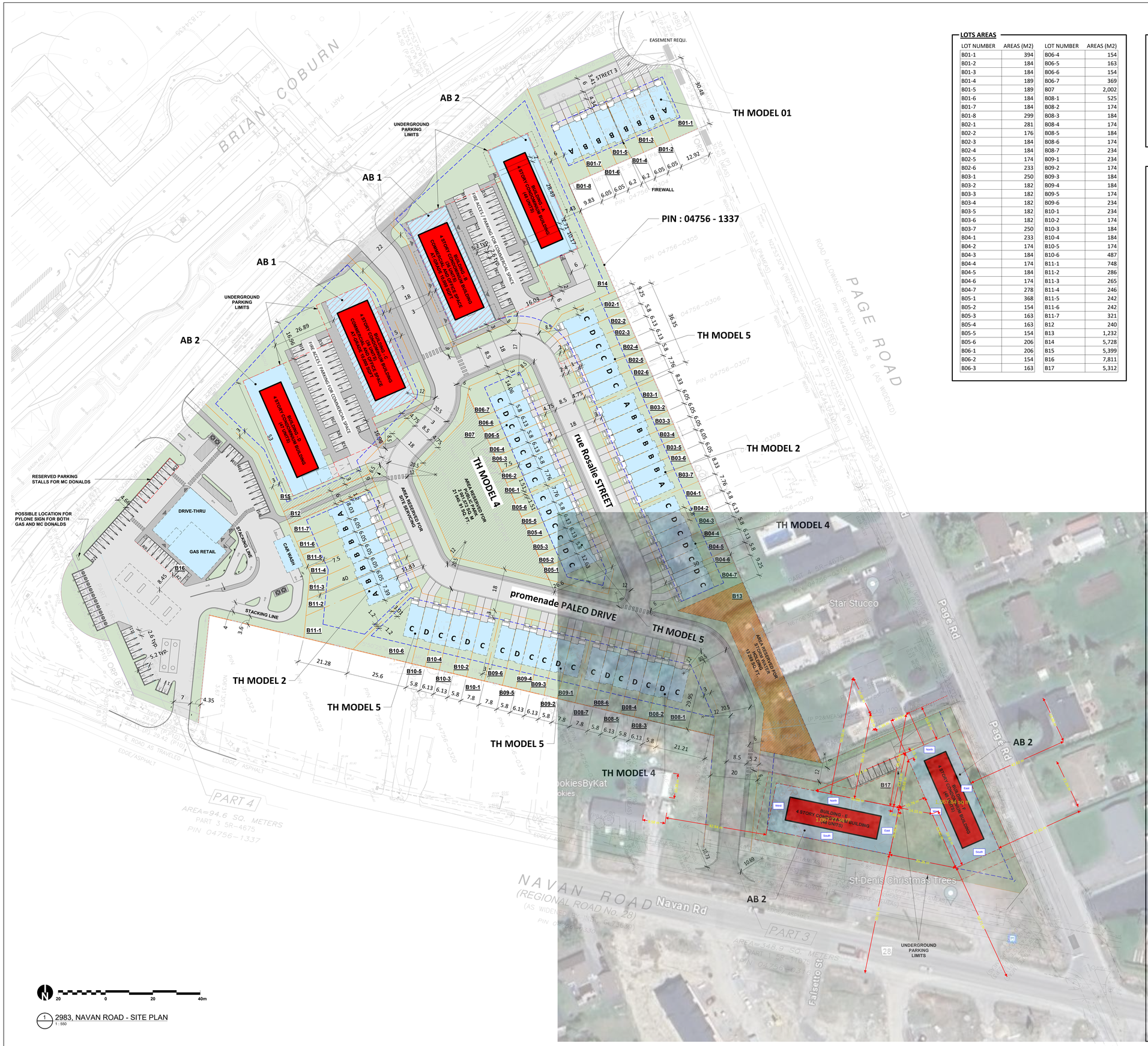

1 2983, NAVAN ROAD - SITE PLAN
1 : 550

LOTS AREAS

LOT NUMBER	AREAS (M2)	LOT NUMBER	AREAS (M2)
B01-1	394	B06-4	154
B01-2	184	B06-5	163
B01-3	184	B06-6	154
B01-4	189	B06-7	369
B01-5	189	B07	2,002
B01-6	184	B08-1	525
B01-7	184	B08-2	174
B01-8	299	B08-3	184
B02-1	281	B08-4	174
B02-2	176	B08-5	184
B02-3	184	B08-6	174
B02-4	184	B08-7	234
B02-5	174	B09-1	234
B02-6	233	B09-2	174
B03-1	250	B09-3	184
B03-2	182	B09-4	184
B03-3	182	B09-5	174
B03-4	182	B09-6	234
B03-5	182	B10-1	234
B03-6	182	B10-2	174
B03-7	250	B10-3	184
B04-1	233	B10-4	184
B04-2	174	B10-5	174
B04-3	184	B10-6	487
B04-4	174	B11-1	748
B04-5	184	B11-2	286
B04-6	174	B11-3	265
B04-7	278	B11-4	246
B05-1	368	B11-5	242
B05-2	154	B11-6	242
B05-3	163	B11-7	321
B05-4	163	B12	240
B05-5	154	B13	1,232
B05-6	206	B14	5,728
B06-1	206	B15	5,399
B06-2	154	B16	7,811
B06-3	163	B17	5,312

SITE PLAN LEGEND

	EXISTING BUILDING		LOT LINE
	NEW BUILDING		SETBACKS
	NEW BUILDING WITH COMMERCIAL SPACE AT-GRADE		NEW TREE
	GRASS		FIREWALL
	ASPHALT		SIDEWALK

SITE INFORMATION & DEVELOPMENT STATISTICS

LOTS		PIN
		04756 - 0303
		04756 - 0315
		04756 - 0316
		04756 - 1337
ZONING		GM[2546] H(14.5)
SITE AREA		
TOTAL SITE AREA:		~53,441.14 m² (5.34ha)
TOTAL DEVELOPABLE AREA:		~45,956.28 m² (4.59ha)
NET SITE AREA:		~38,956.28 m² (3.89ha)
UNITS		
TOWNHOUSES:		67 UNITS
BLOCK 01:		
1 X RESIDENTIAL APARTMENT BUILDING		48 UNITS
1 X MIXED USE BUILDING		
RESIDENTIAL:		36 UNITS
COMMERCIAL SPACES:		~929 m²
BLOCK 02:		
1 X RESIDENTIAL APARTMENT BUILDING		47 UNITS
1 X MIXED USE BUILDING		
RESIDENTIAL:		36 UNITS
COMMERCIAL SPACES:		~929 m²
BLOCK 03:		
2 X RESIDENTIAL APARTMENT BUILDING		96 UNITS
TOTAL NUMBER OF UNITS:		330 UNITS
TOTAL COMMERCIAL SPACES:		~1,858 m²
	REQUIRED	PROVIDED
MAXIMUM DENSITY	NO MAX.	84.8 units/net ha
MINIMUM LOT WIDTH	NO MIN.	5.8 m
MINIMUM LOT AREA	NO MIN.	174 m²
MAXIMUM BUILDING HEIGHT	14.5 m	14.5 m
SETBACKS		
MINIMUM FRONT YARD:	3 m	3 m
MINIMUM CORNER SIDE YARD:	3 m	3 m
MINIMUM INTERIOR SIDE YARD:		
NON-RESIDENTIAL OR MIXED-USE:	5 m	5 m
LOW-RISE RESIDENTIAL :	1.2 m	1.2 m
MID-RISE RESIDENTIAL :	3 m	3 m
MINIMIM REAR YARD:		
ABUTTING A STREET:	3 m	3 m
FROM A RESIDENTIAL ZONE:	7.5 m	7.5 m
FOR A RESIDENTIAL BUILDING:	7.5 m	7.5 m
PARKING RATES		
R9 - TOWNHOUSES:	1 p/unit = 67	67 (GARAGES)
VISITOR:	0	67 DRIVE AISLES
BLOCK 14:		
R12 - APARTEMENTS	1.2 p/unit = 101	101 (UNDERGROUND)
VISITOR:	0.2 p/unit = 17	17 (UNDERGROUND)
N79 - RETAIL STORE:	3.4 p/100 m² GFA = 32	32 (EXTERIOR)
		TOTAL: 150
BLOCK 15:		
R12 - APARTEMENTS	1.2 p/unit = 100	100 (UNDERGROUND)
VISITOR:	0.2 p/unit = 17	17 (UNDERGROUND)
N79 - RETAIL STORE:	3.4 p/100 m² GFA = 32	32 (EXTERIOR)
		TOTAL: 150
BLOCK 18:		
R12 - APARTEMENTS	1.2 p/unit = 116	145 (UNDERGROUND)
VISITOR:	0.2 p/unit = 17	17 (8 EXT. + 12 UND.)
		TOTAL: 162
GROSS FLOOR AREA		
TOWNHOUSE A:		267 m²
TOWNHOUSE B:		239 m²
TOWNHOUSE C:		232 m²
TOWNHOUSE C (CORNER UNIT):		236 m²
TOWNHOUSE D:		225 m²
TOTAL MODEL 01 (ABBBBBBA)		1,968 m²
TOTAL MODEL 02 (ABBBBBA)		1,729 m²
TOTAL MODEL 03 (ABBBBA)		1,490 m²
TOTAL MODEL 04 (CDCDCDC)		1,611 m²
TOTAL MODEL 05 (CDCCDC)		1,386 m²
MIXED USE BUILDING (TOTAL OF 2 BUILDINGS):		TOTAL: 4,130 m²
RESIDENTIAL:		3,201 m²
COMMERCIAL:		929 m²
RESIDENTIAL APARTMENT BUILDING (TOTAL OF 4 BUILDINGS) :		TOTAL: 4,130 m²
RESIDENTIAL:		4,130 m²

NOTE

1. ASSUMES TYPICAL RESIDENTIAL FLOOR HEIGHT OF 3m.
2. THE BASE PLAN (LOT LINES, EXISTING ROADS AND SURROUNDING AREAS) IS BASED ON THE TOPOGRAPHICAL PLAN OF SURVEY, SURVEYED STANTEC GEOMATICS LTD.
3. DISTANCES SHOWN ON THIS PLAN ARE IN METRES AND CAN BE CONVERTED TO FEET BY DIVIDING BY 0,3048.

PROJECT

NAVAN ROAD DEVELOPMENT

2983, Navan Road, Orleans, ON K1C 7G4

OWNER

GROUPE Heafey GROUP
768, BOUL. SAINT-JOSEPH, SUITE 100
GATINEAU, QC J8Y 4B8

ARCHITECTURAL

PMA ARCHITECTES
(418) 651-8959
INFO@PMAARCHITECTES.COM
3070, CHEMIN DES QUATRE-BOURGEOIS
QUÉBEC (QC) G1W 2K4
PMAARCHITECTES.COM

LAPALME RHEAULT ARCHITECTES | ASSOCIÉS
53, BOUL. SAINT-RAYMOND,
GATINEAU, QC J8Y 1R8

ENGINEERS / PLANNER

J.L.Richards
ENGINEERS · ARCHITECTS · PLANNERS
1565 CARLING AVENUE, SUITE 700,
OTTAWA, ON K1Z 8R1

SURVEYOR

Stantec
1331 CLYDE AVENUE, SUITE 400,
OTTAWA, ON K2C 3G4

KEY PLAN

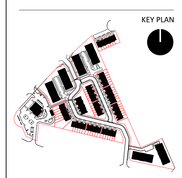

ARCHITECT SEAL

REVISIONS

NO	DESCRIPTION	DATE
8	FOR CITY REVIEW	2022-11-28
7	FOR COORDINATION	2022-11-08
6	FOR COORDINATION	2022-11-01
5	FOR COORDINATION	2022-06-14
4	FOR COORDINATION	2021-11-03
3	FOR COORDINATION	2021-08-30
2	FOR COORDINATION	2021-08-26
1	FOR COORDINATION	2021-08-18

NOTE

IT IS THE RESPONSIBILITY OF THE APPROPRIATE CONTRACTOR TO CHECK AND VERIFY ALL DIMENSIONS ON THE SITE AND TO REPORT ALL ERRORS AND/OR OMISSIONS TO THE ARCHITECT. ALL CONTRACTORS MUST COMPLY WITH ALL PERTINENT CODES AND BY-LAWS. DO NOT SCALE DRAWINGS.

THIS DOCUMENT AND ITS CONTENT IS COPYRIGHTED. ANY REPRODUCTION IS PROHIBITED UNLESS GRANTED BY THE ARCHITECT.

DO NOT USE FOR CONSTRUCTION

DATE	DESIGNED
2023-10-04	PP
	DRAWN
	PP
PROJECT No	CHECKED
20054	PM

SHEET TITLE

SITE PLAN

SHEET No

A100

BIM 360://NAVAN/20054_DEV-NAVAN_SITE_PLAN_R21.rvt

Table 1. Maximum flow to be considered from a given hydrant

Hydrant Class	Distance to asset/structure/building (m)[a]	Contribution to required fire flow (L/min)[b]
AA	≤ 75	5,700
	> 75 and ≤ 150	3,800
A	≤ 75	3,800
	> 75 and ≤ 150	2,850
B	≤ 75	1,900
	> 75 and ≤ 150	1,500
C	≤ 75	800
	> 75 and ≤ 150	800

[a] Distance of contributing hydrant from the structure, measured in accordance with NFPA 1 (Appendix A).

[b] Maximum flow contribution to be considered for a given asset/structure/building, at a residual pressure of 20 psi, measured at the location of the main, at ground level.

Block 17

Required Fire Flow Building E = 233 L/s
Required Fire Flow Building F = 250 L/s

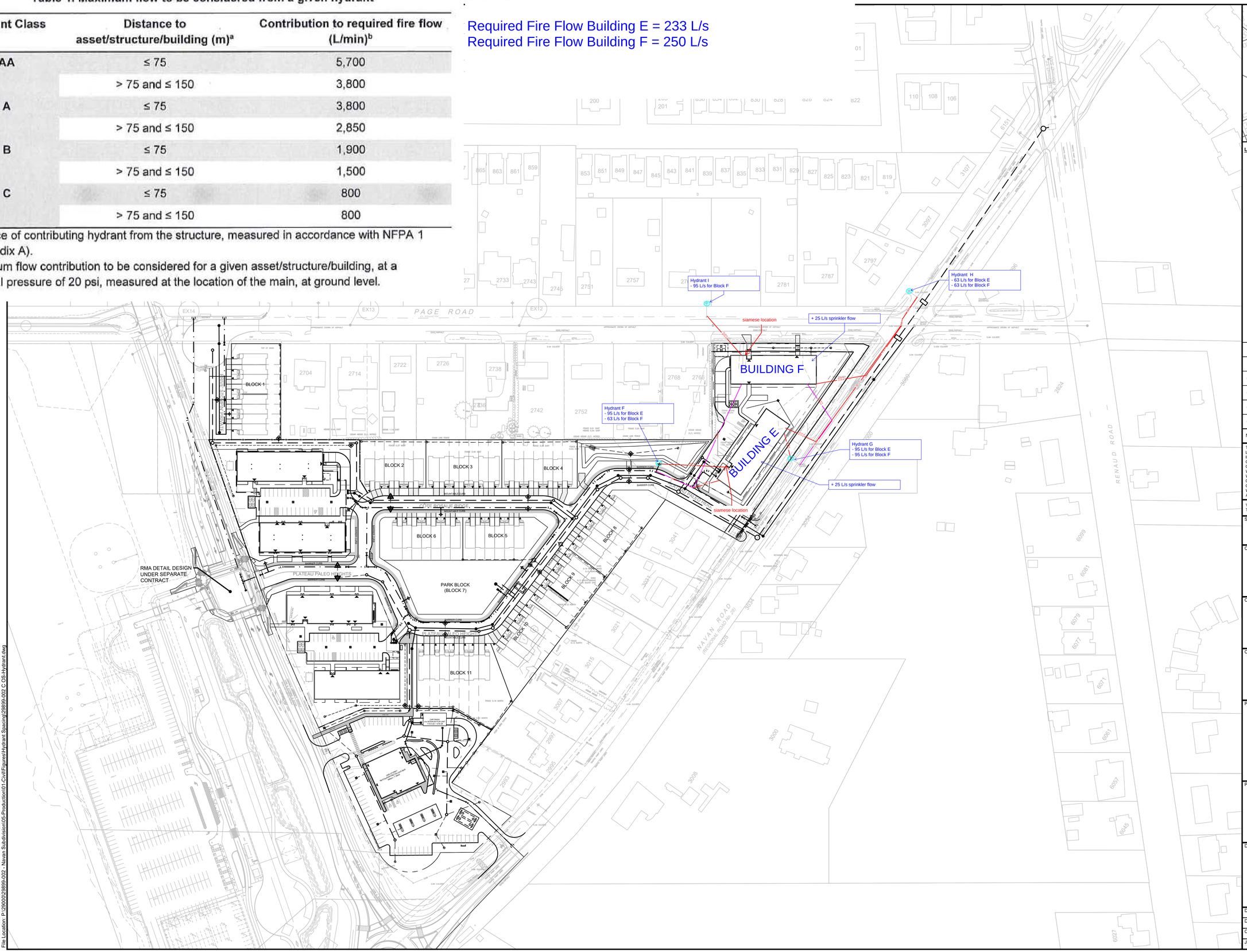

KEY PLAN
N.T.S

LEGEND

- PROPOSED WATERMAIN, VALVE & HYDRANT
- EXISTING WATERMAIN, VALVE & HYDRANT
- EXISTING SANITARY SEWER & MANHOLE
- EXISTING STORM SEWER & MANHOLE
- PROPOSED SANITARY SEWER & MANHOLE
- PROPOSED STORM SEWER & MANHOLE
- STEPPED FOOTING
- FIREWALL
- PROPOSED CULVERT
- DRAWING NUMBER
- RIP-RAP TO OPSD 810.010 (TYPE B)
- EXISTING CATCH BASIN
- PROPOSED CATCH BASIN c/w ICD
- PROPOSED CATCH BASIN & LEAD
- PROPOSED TEE CATCHBASIN
- PROPOSED 3-WAY CATCHBASIN
- TACTILE WALKING INDICATOR STRIP (TWIS)
- CONC. SIDEWALK
- ASPHALT
- INFILTRATION TRENCH

Draft Print
2024-06-20, 5:31:39 PM

No.	ISSUE / REVISION	DD/MM/YY
04	[illegible]	04/03/24
03	RE-ISSUED TO CITY FOR ENGINEERING REVIEW (SECOND SUBMISSION)	16/02/24
02	ISSUED FOR MUNICIPAL CONSENT	09/02/24
01	ISSUED TO CITY FOR ENGINEERING REVIEW	22/09/23

THESE DRAWINGS HAVE BEEN PRODUCED BY J.L. RICHARDS & ASSOCIATES LIMITED AND ARE SUBJECT TO COPYRIGHT AND USE RESTRICTIONS SET OUT IN THE APPLICABLE PROJECT CONTRACT. ANY USE, REUSE, OR MODIFICATION OF THESE DRAWINGS FOR PURPOSES OTHER THAN THE ORIGINAL PROJECT OR EXECUTION OF THE DESCRIBED WORK IS NOT PERMITTED OR ENDORSED WITHOUT THE PRIOR WRITTEN AUTHORIZATION OF JLR. JLR MAKES NO WARRANTIES, EITHER EXPRESS OR IMPLIED, OF THE SUITABILITY OR FITNESS OF THESE DRAWINGS FOR ANY OTHER PURPOSE, AND ANY PARTY WHICH CHOOSES TO USE, MODIFY, OR OTHERWISE RELY ON THESE DRAWINGS WITHOUT JLR'S AUTHORIZATION ACCEPTS THESE LIMITATIONS AND DOES SO AT THEIR SOLE RISK AND WITHOUT LIABILITY TO JLR.

VERIFY SHEET SIZE AND SCALES. THE BAR TO THE RIGHT IS 25mm IF THIS IS A FULL SIZE DRAWING. 0 25mm

SCALE: 1:1000

CLIENT: Groupe Healey Group

CONSULTANT: www.jlrichards.ca
J.L.Richards ENGINEERS · ARCHITECTS · PLANNERS

CONSULTANT:

PROFESSIONAL STAMP

PROJECT NORTH

PROJECT:

NAVAN SUBDIVISION

2983, 3053, & 3079 NAVAN ROAD & 2690 PAGE ROAD
OTTAWA, ONTARIO

DRAWING:

OVERALL SERVICING

DESIGN: TR	DRAWING #:
DRAWN: KT	OS
CHECKED: KF	
JLR #: 29899-002	

File Location: P:\29000\29899-002 - Navan Subdivision\05-Production\01-Civil\Figures\Hydrant Spacing\29899-002 C OS-Hydrant.dwg

PLOT DATE: June 20, 2024, 5:31:12 PM
CITY PLAN No. 18572 CITY FILE No. D07-16-21-0027

Boundary Conditions
Navan Subdivision

Provided Information

Scenario	Demand	
	L/min	L/s
Average Daily Demand	404	6.74
Maximum Daily Demand	632	10.53
Peak Hour	1,090	18.17
Fire Flow Demand #1	6,000	100.00
Fire Flow Demand #2	10,000	166.67
Fire Flow Demand #3	14,000	233.33
Fire Flow Demand #4	15,000	250.00

Location

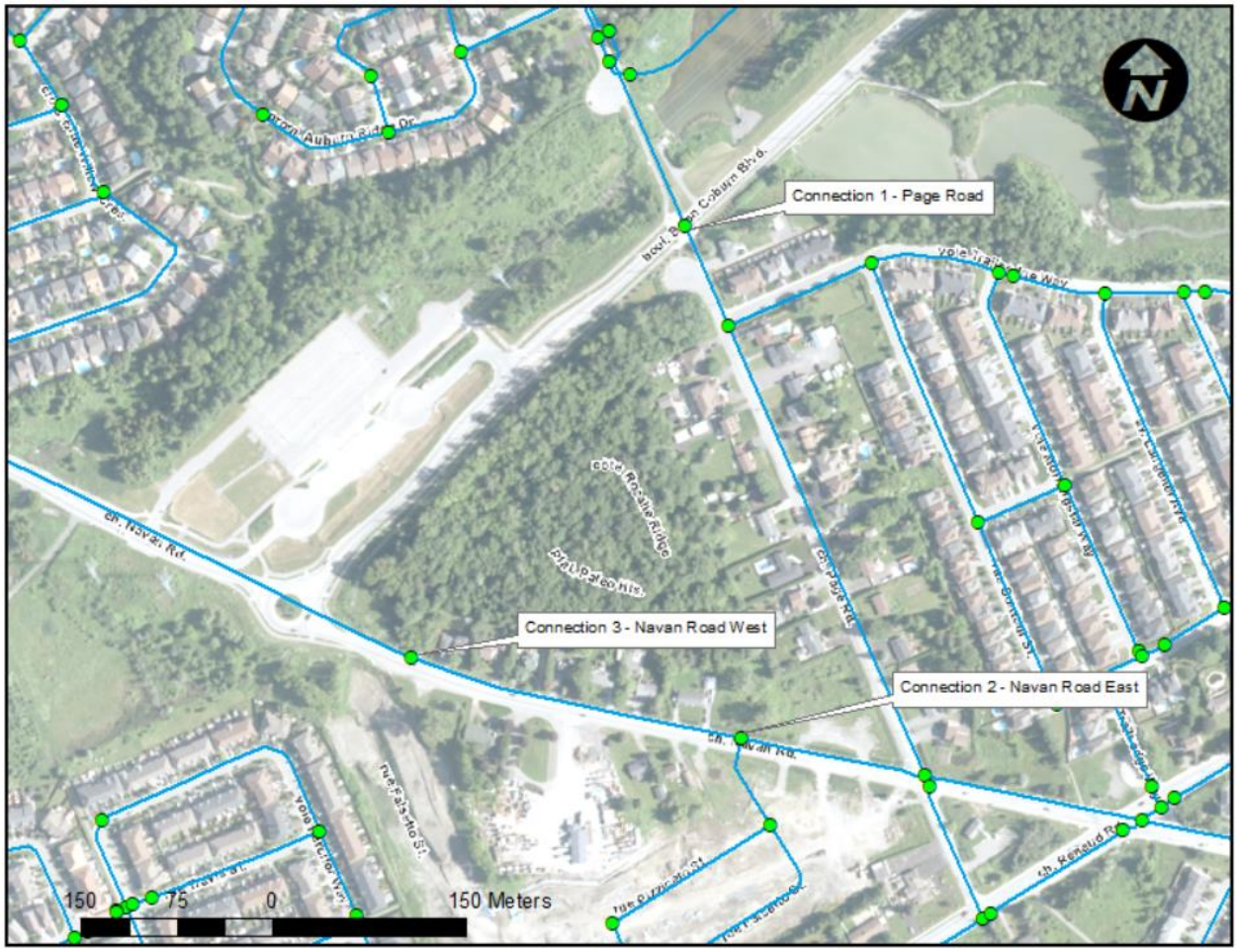

Results

Connection 1 - Page Road

Demand Scenario	Head (m)	Pressure[1] (psi)
Maximum HGL	130.7	64.0
Peak Hour	127.0	58.6
Max Day plus Fire Flow #1	128.2	60.4
Max Day plus Fire Flow #2	126.8	58.3
Max Day plus Fire Flow #3	124.9	55.7
Max Day plus Fire Flow #4	124.4	55.0
[1] Ground Elevation =	85.7	m

Connection 2 - Navan Road East

Demand Scenario	Head (m)	Pressure[1] (psi)
Maximum HGL	130.7	71.4
Peak Hour	126.8	65.9
Max Day plus Fire Flow #1	127.7	67.1
Max Day plus Fire Flow #2	125.5	64.1
Max Day plus Fire Flow #3	122.7	60.1
Max Day plus Fire Flow #4	121.9	58.9
[1] Ground Elevation =	80.5	m

Connection 3 - Navan Road West

Demand Scenario	Head (m)	Pressure[1] (psi)
Maximum HGL	130.7	69.3
Peak Hour	126.8	63.8
Max Day plus Fire Flow #1	127.3	64.5
Max Day plus Fire Flow #2	124.6	60.6
Max Day plus Fire Flow #3	120.9	55.3
Max Day plus Fire Flow #4	119.8	53.8
[1] Ground Elevation =	81.9	m

Disclaimer

The boundary condition information is based on current operation of the city water distribution system. The computer model simulation is based on the best information available at the time. The operation of the water distribution system can change on a regular basis, resulting in a variation in boundary conditions. The physical properties of watermains deteriorate over time, as such must be assumed in the absence of actual field test data. The variation in physical watermain properties can therefore alter the results of the computer model simulation. Fire Flow analysis is a reflection of available flow in the watermain; there may be additional restrictions that occur between the watermain and the hydrant that the model cannot take into account.

William Rugamba

From: Mahad Musse
Sent: July 15, 2024 1:21 PM
To: William Rugamba
Subject: FW: Navan Subdivision - Boundary Condition Request
Attachments: NavanSubdivision_Boundary Condition(4july2024).docx

Mahad Musse, B.Eng., EIT
Civil Engineering Graduate
Ottawa, ON
Work: 343-633-1501

From: Polyak, Alex <alex.polyak@ottawa.ca>
Sent: Monday, July 15, 2024 10:12 AM
To: Mahad Musse <mmusse@jlrichards.ca>
Cc: Karla Ferrey <kferrey@jlrichards.ca>; Raad Akrawi <rakrawi@groupeheafey.com>; Carmine Zayoun <carmine@zayoungroup.com>; Armstrong, Justin <justin.armstrong@ottawa.ca>; Tatyana Roumie <troumie@jlrichards.ca>
Subject: RE: Navan Subdivision - Boundary Condition Request

[CAUTION] This email originated from outside JLR. Do not click links or open attachments unless you recognize the sender and know the content is safe. Do not forward suspicious emails, if you are unsure, please send a separate message to Helpdesk.

Good morning Mahad,

Please find the boundary conditions attached.

Regards,

Oleksandr (Alex) Polyak, B.Eng., C.E.T., P.Eng.
Project Manager, Infrastructure Approvals, Development Review East Branch | Gestionnaire de projet, Direction de l'examen des projets d'aménagement – Est.
Planning, Development and Building Services Department (PDBS) | Direction générale des services de la planification, de l'aménagement et du bâtiment (DGSPAB

City of Ottawa | Ville d'Ottawa
110 Laurier Ave., 4th Fl East, Ottawa ON K1P 1J1
Email: alex.polyak@ottawa.ca
Cell : 613-857-4380
www.Ottawa.ca

From: Mahad Musse <mmusse@jlrichards.ca>
Sent: July 12, 2024 1:31 PM
To: Polyak, Alex <alex.polyak@ottawa.ca>
Cc: Karla Ferrey <kferrey@jlrichards.ca>; Raad Akrawi <rakrawi@groupeheafey.com>; Carmine Zayoun <carmine@zayoungroup.com>; Armstrong, Justin <justin.armstrong@ottawa.ca>; Tatyana Roumie <troumie@jlrichards.ca>
Subject: RE: Navan Subdivision - Boundary Condition Request

CAUTION: This email originated from an External Sender. Please do not click links or open attachments unless you recognize the source.

ATTENTION : Ce courriel provient d'un expéditeur externe. Ne cliquez sur aucun lien et n'ouvrez pas de pièce jointe, excepté si vous connaissez l'expéditeur.

Hi Alex,

Just wondering if you have a status update for the boundary conditions for Navan.

Thanks
Mahad

Mahad Musse, B.Eng., EIT
Civil Engineering Graduate

1000-343 Preston Street
Ottawa, ON, K1S 1N4

Work: 343-633-1501
mmusse@jlrichards.ca

From: Mahad Musse <mmusse@jlrichards.ca>
Sent: Wednesday, July 3, 2024 11:02 AM
To: Polyak, Alex <alex.polyak@ottawa.ca>
Cc: Karla Ferrey <kferrey@jlrichards.ca>; Raad Akrawi <rakrawi@groupeheafey.com>; Carmine Zayoun <carmine@zayoungroup.com>; Armstrong, Justin <justin.armstrong@ottawa.ca>; Tatyana Roumie <troumie@jlrichards.ca>
Subject: RE: Navan Subdivision - Boundary Condition Request

Good morning Alex,

As we discussed last week our Client is looking into the option of converting the row townhouse units into duplex units (townhouse units with apartments in the basement). As a result, this will increase the total demand on the site and we will therefore require new water boundary conditions. We'd like to note that the footprint of the blocks will not change and neither will their layout or any of the offsets.

As a summary:

- Domestic demands were calculated based on a daily consumption rate of 280 L/cap/day with peaking factors consistent with City of Ottawa Guidelines
- Required Fire Flow (RFF) was calculated in accordance to the Fire Underwriters Survey (FUS) Water Supply for Public Fire Protection and the City of Ottawa FUS protocol (Bulletin ISDTB-2014-02 & Bulletin ISDTB-2018-02), which considers material, expose distance & height. We have attached the calculation spreadsheet and the figure.

We request boundary conditions under high pressure, peak hour, and maximum day + fire flow conditions (for each of the below fire flows). Domestic demand and fire flow calculations are attached. Please provide the boundary conditions at the proposed connection locations as shown in the attached figure.

Average Day Demand: 6.74 L/s
Maximum Day Demand: 10.53 L/s
Peak Hour Demand: 18.17 L/s
Required Fire Flow (per FUS): 6,000 L/min (100 L/s)
Required Fire Flow (per FUS): 10,000 L/min (167 L/s)
Required Fire Flow (per FUS): 14,000 L/min (233 L/s)
Required Fire Flow (per FUS): 15,000 L/min (250 L/s)

For your reference, the previous boundary condition received from the City is attached and below is the email chain.

If you have any questions or comments please let us know.

Thanks
Mahad

Mahad Musse, B.Eng., EIT
Civil Engineering Graduate

1000-343 Preston Street
Ottawa, ON, K1S 1N4

Work: 343-633-1501
mmusse@jlrichards.ca

From: Polyak, Alex <alex.polyak@ottawa.ca>
Sent: Thursday, August 17, 2023 3:01 PM
To: William Rugamba <wrugamba@jlrichards.ca>
Cc: Karla Ferrey <kferrey@jlrichards.ca>; Raad Akrawi <rakrawi@groupeheafey.com>; Carmine Zayoun <carmine@zayoungroup.com>; Shahira Jalal <sjalal@jlrichards.ca>
Subject: RE: Navan Subdivision - Boundary Condition Request

[CAUTION] This email originated from outside JLR. Do not click links or open attachments unless you recognize the sender and know the content is safe. Do not forward suspicious emails, if you are unsure, please send a separate message to Helpdesk.

Hello William,

Sorry that I missed your call, I was in a meeting. The boundary conditions are attached.

Regards,

Oleksandr (Alex) Polyak, B.Eng., P.Eng
Project Manager, Infrastructure Approvals, Development Review East Branch | Gestionnaire de projet, Direction de l'examen des projets d'aménagement – Est.
Planning, Real Estate and Economic Development Department | Direction générale de la planification, des biens immobiliers et du développement économique

City of Ottawa | Ville d'Ottawa
110 Laurier Ave., 4th Fl East, Ottawa ON K1P 1J1
Email: alex.polyak@ottawa.ca
Cell : 613-857-4380
www.Ottawa.ca

From: William Rugamba <wrugamba@jlrichards.ca>
Sent: August 15, 2023 9:26 AM
To: Polyak, Alex <alex.polyak@ottawa.ca>
Cc: Karla Ferrey <kferrey@jlrichards.ca>; Raad Akrawi <rakrawi@groupeheafey.com>; Carmine Zayoun <carmine@zayoungroup.com>; Shahira Jalal <sjalal@jlrichards.ca>
Subject: RE: Navan Subdivision - Boundary Condition Request

CAUTION: This email originated from an External Sender. Please do not click links or open attachments unless you recognize the source.

ATTENTION : Ce courriel provient d'un expéditeur externe. Ne cliquez sur aucun lien et n'ouvrez pas de pièce jointe, excepté si vous connaissez l'expéditeur.

Good morning Alex,

Just wanted to follow up on the status of this boundary request. Please let me know if you need anything else from us.

Thanks,
William

William Rugamba, M.Eng.
Civil Engineering Intern

J.L. Richards & Associates Limited
1000-343 Preston Street, Ottawa, ON K1S 1N4
Direct: 343-804-4374

From: Tatyana Roumie
Sent: Tuesday, July 25, 2023 3:53 PM
To: 'alex.polyak@ottawa.ca' <alex.polyak@ottawa.ca>
Cc: Karla Ferrey <kferrey@jlrichards.ca>; Raad Akrawi <rakrawi@groupeheafey.com>; carmine@zayoungroup.com; Shahira Jalal <sjalal@jlrichards.ca>
Subject: Navan Subdivision - Boundary Condition Request

Hello Alex.

To support our upcoming detailed design for the site, we are requesting updated boundary conditions for the 3079 Navan Road Development.

As a brief history, we received boundary conditions from the City in July 2021 (attached, but with incorrect connection locations) and again in April 2022 (also attached) in support of the functional servicing design. We understand from the April 2022 boundary conditions that the maximum available fire flow for the site is 250 L/s.

We are currently requesting updated boundary conditions for this site as we are commencing the detailed servicing design and this request will accommodate the recent site plan changes and proposed connection points. This request is also applicable to the upcoming site plan designs which will be submitted as separate applications.

We request boundary conditions under high pressure, peak hour, and maximum day + fire flow conditions (for each of the below fire flows). Domestic demand and fire flow calculations are attached. Please provide the boundary conditions at the proposed connection locations as shown in the attached figure.

Average Day Demand: 6.44 L/s
Maximum Day Demand: 9.77 L/s
Peak Hour Demand: 16.50 L/s
Required Fire Flow (per FUS): 6,000 L/min (100 L/s)
Required Fire Flow (per FUS): 10,000 L/min (167 L/s)
Required Fire Flow (per FUS): 14,000 L/min (233 L/s)
Required Fire Flow (per FUS): 15,000 L/min (250 L/s)

Thanks,
Tatyana

'

This e-mail originates from the City of Ottawa e-mail system. Any distribution, use or copying of this e-mail or the information it contains by other than the intended recipient(s) is unauthorized. Thank you.

Le présent courriel a été expédié par le système de courriels de la Ville d'Ottawa. Toute distribution, utilisation ou reproduction du courriel ou des renseignements qui s'y trouvent par une personne autre que son destinataire prévu est interdite. Je vous remercie de votre collaboration.

'
'

This e-mail originates from the City of Ottawa e-mail system. Any distribution, use or copying of this e-mail or the information it contains by other than the intended recipient(s) is unauthorized. Thank you.

Le présent courriel a été expédié par le système de courriels de la Ville d'Ottawa. Toute distribution, utilisation ou reproduction du courriel ou des renseignements qui s'y trouvent par une personne autre que son destinataire prévu est interdite. Je vous remercie de votre collaboration.

'

Mixed-Use Site Plan (Block 17)
Model Schematic

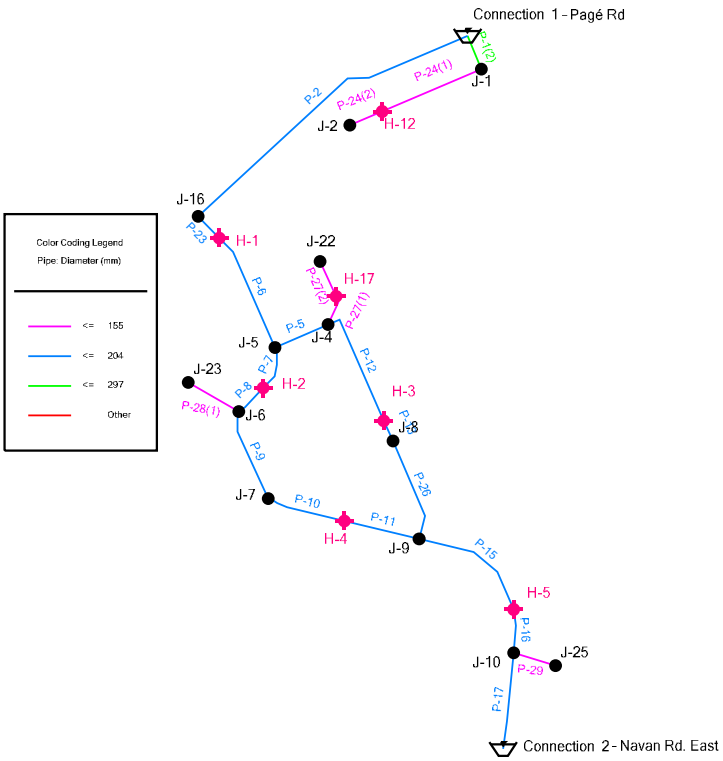

Mixed-Use Site Plan (Block 17)
Model Schematic
Elevation Model

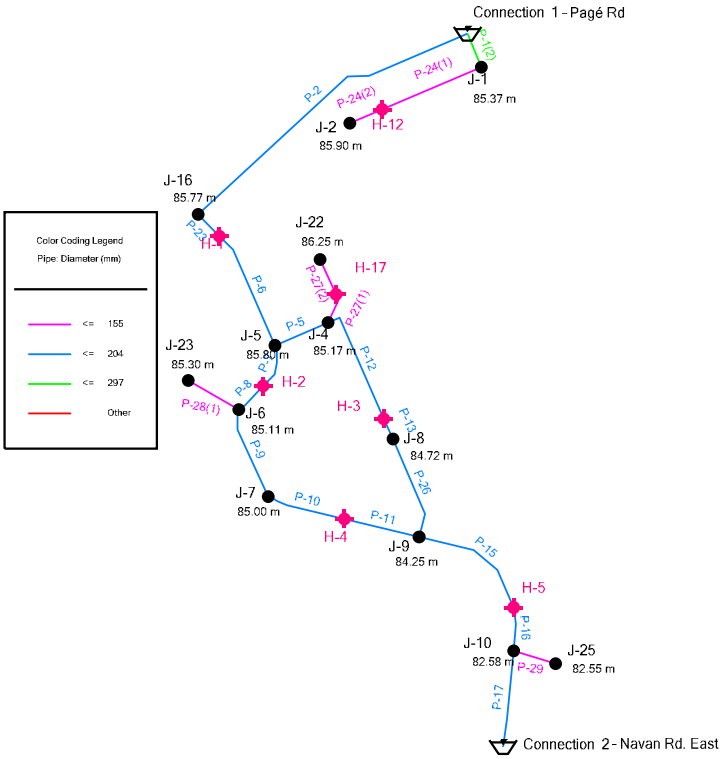

Mixed-Use Site Plan (Block 17)
Peak Hour Demand

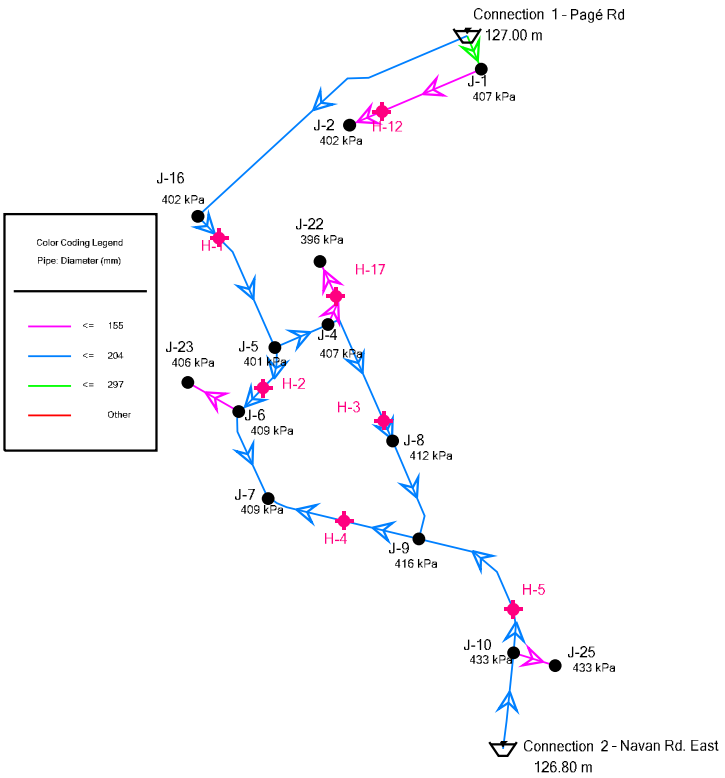

Mixed-Use Site Plan (Block 17)
Peak Hour Demand
Junction Table

Label	Elevation (m)	Demand (L/s)	Hydraulic Grade (m)	Pressure (kPa)
J-22	86.25	2.78	126.76	396
J-5	85.80	0.00	126.78	401
J-16	85.77	0.00	126.85	402
J-2	85.90	0.58	127.00	402
J-23	85.30	2.74	126.76	406
J-4	85.17	0.00	126.78	407
J-1	85.37	0.00	127.00	407
J-6	85.03	0.00	126.77	409
J-7	85.00	4.95	126.77	409
J-8	84.72	1.90	126.77	412
J-9	84.25	1.46	126.77	416
J-10	82.58	0.00	126.78	433
J-25	82.55	3.08	126.77	433

Mixed-Use Site Plan (Block 17)
Peak Hour Demand
Pipe Table

Label	Length (Scaled) (m)	Diameter (mm)	Material	Hazen-Williams C	Flow (L/s)	Velocity (m/s)
P-1(2)	19	297	PVC	120.0	-0.58	0.01
P-2	173	204	PVC	110.0	10.38	0.32
P-5	31	204	PVC	110.0	-4.93	0.15
P-6	64	204	PVC	110.0	-10.38	0.32
P-7	24	204	PVC	110.0	5.45	0.17
P-8	18	204	PVC	110.0	5.45	0.17
P-9	49	204	PVC	110.0	2.71	0.08
P-10	41	204	PVC	110.0	-2.24	0.07
P-11	40	204	PVC	110.0	-2.24	0.07
P-12	64	204	PVC	110.0	2.15	0.07
P-13	11	204	PVC	110.0	2.15	0.07
P-15	67	204	PVC	110.0	-3.45	0.11
P-16	23	204	PVC	110.0	-3.45	0.11
P-17	50	204	PVC	110.0	-6.53	0.20
P-23	16	204	PVC	110.0	10.38	0.32
P-24(1)	56	155	PVC	100.0	0.58	0.03
P-24(2)	18	155	PVC	100.0	0.58	0.03
P-26	55	204	PVC	110.0	0.25	0.01
P-27(1)	16	155	PVC	100.0	2.78	0.15
P-27(2)	20	155	PVC	100.0	2.78	0.15
P-28(1)	30	155	PVC	100.0	2.74	0.15
P-29	23	155	PVC	100.0	3.08	0.16

Mixed-Use Site Plan (Block 17)
Max Day + Fire Flow Requirement

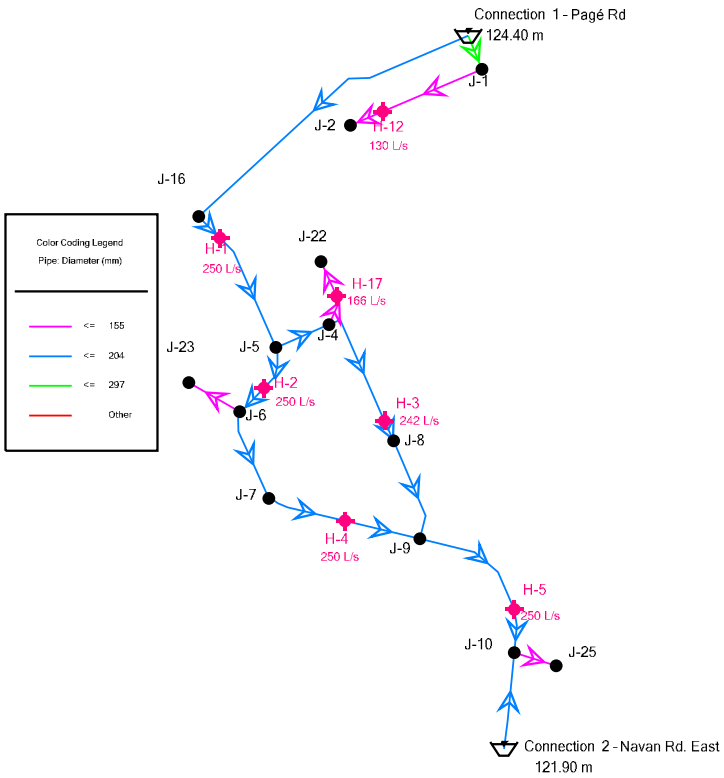

Mixed-Use Site Plan (Block 17)
Max Day + Fire Flow Requirement
Hydrant Table

Label	Satisfies Fire Flow Constraints?	Fire Flow (Available) (L/s)	Flow (Total Available) (L/s)	Pressure (Residual Lower Limit) (kPa)	Pressure (Calculated Residual) (kPa)	Pressure (Calculated System Lower Limit) (kPa)	Junction w/ Minimum Pressure (System)
H-1	True	250	250	140	164	186	J-16
H-2	True	250	250	140	142	148	J-23
H-3	True	242	242	140	140	155	J-8
H-4	True	250	250	140	144	154	J-7
H-5	True	250	250	140	253	256	J-22
H-12	True	130	130	140	144	140	J-2
H-17	True	166	166	140	143	140	J-22

Mixed-Use Site Plan (Block 17)
Maximum Pressure Analysis

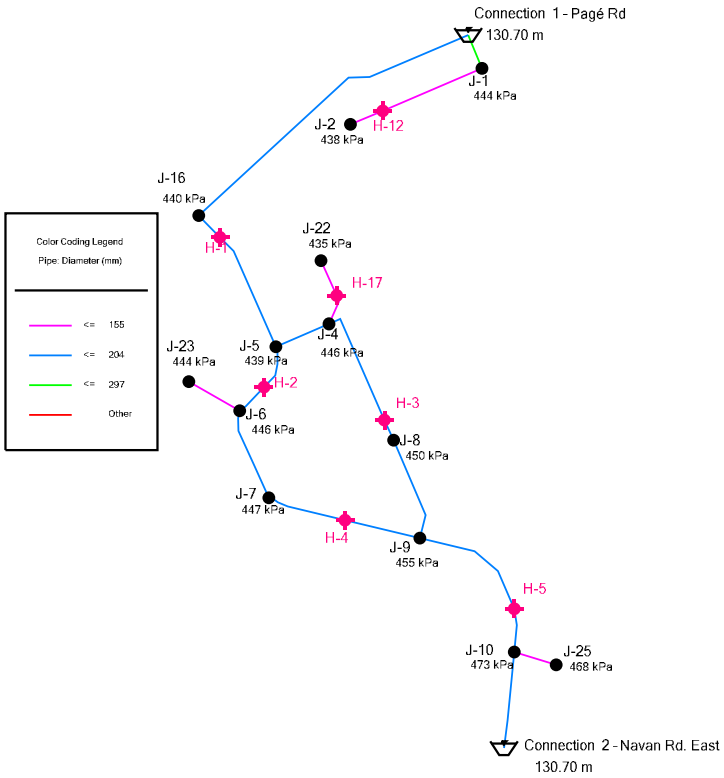

Mixed-Use Site Plan (Block 17)
Maximum Pressure Analysis
Junction Table

Label	Elevation (m)	Demand (L/s)	Hydraulic Grade (m)	Pressure (kPa)
J-22	86.25	0	130.70	435
J-2	85.90	0	130.70	438
J-5	85.80	0	130.70	439
J-16	85.77	0	130.70	440
J-1	85.37	0	130.70	444
J-23	85.30	0	130.70	444
J-4	85.17	0	130.70	446
J-6	85.11	0	130.70	446
J-7	85.00	0	130.70	447
J-8	84.72	0	130.70	450
J-9	84.25	0	130.70	455
J-25	82.90	0	130.70	468
J-10	82.42	0	130.70	473

Mixed-Use Site Plan (Block 17)
Maximum Pressure Analysis
Pipe Table

Label	Length (Scaled) (m)	Diameter (mm)	Material	Hazen-Williams C	Flow (L/s)	Velocity (m/s)
P-1(2)	19	297	PVC	120.0	0	0.00
P-2	173	204	PVC	110.0	0	0.00
P-5	31	204	PVC	110.0	0	0.00
P-6	64	204	PVC	110.0	0	0.00
P-7	24	204	PVC	110.0	0	0.00
P-8	18	204	PVC	110.0	0	0.00
P-9	49	204	PVC	110.0	0	0.00
P-10	41	204	PVC	110.0	0	0.00
P-11	40	204	PVC	110.0	0	0.00
P-12	64	204	PVC	110.0	0	0.00
P-13	11	204	PVC	110.0	0	0.00
P-15	67	204	PVC	110.0	0	0.00
P-16	23	204	PVC	110.0	0	0.00
P-17	50	204	PVC	110.0	0	0.00
P-23	16	204	PVC	110.0	0	0.00
P-24(1)	56	155	PVC	100.0	0	0.00
P-24(2)	18	155	PVC	100.0	0	0.00
P-26	55	204	PVC	110.0	0	0.00
P-27(1)	16	155	PVC	100.0	0	0.00
P-27(2)	20	155	PVC	100.0	0	0.00
P-28(1)	30	155	PVC	100.0	0	0.00
P-29	23	155	PVC	100.0	0	0.00

Appendix D

Stormwater Management

J.L.Richards
ENGINEERS · ARCHITECTS · PLANNERS

2983, 3053 and 3079 Navan Road and 2690 Page Road
STORM SEWER DESIGN SHEET
JLR NO. 29899-003

DESIGNED BY: MM/FA
CHECKED BY: KF
Date: September 2024

JLR NO. 29899-003 (NAVAN BLOCK 17)

PIPE REACH			Peak Flow Estimation													Sewer Data									Upstream Geometry				Downstream Geometry					Self Cleansing Velocities			
			C-Factor (1:2 Year)						1:2 Year Storm (RATIONAL METHOD)			Plug Flows																									
LOCATION	From MH	To MH	0.20	0.30	0.90	Cum. Total Area (ha)	Inlet Time (min.)	In Pipe Flow Time (min)	Total Time	Cum. 2.78AR	1:2 Year Intensity (mm/hr)	1:2 Year Peak Flow (L/s)	ICD Flow EXST MH504 (1) (L/s)	Roof Drain Flow (2) (L/s)	Cistern Flow (3) (L/s)	Total Peak Flow (4 & 5) (L/s)	Type	Nominal Dia. (mm)	Actual Dia. (mm)	Slope	Length (m)	Q Full (L/s)	V Full (m/s)	Residual Capacity (6) (L/s)	% Full	TG From	Obvert	Invert	Cover	TG To	Drop	Obvert	Invert	Cover	Q/Qf Ratio	Flow Depth (mm)	Actual Velocity (7) (m/s)	Flow Depth to Dia. Ratio (d/D)
EAST ORLEANS RIDGE SUBDIVISION (8)	UPSTREAM	EX MH 504	Refer to Note 8			5.99	**16.06**	0.25	**16.31**	10.18	89.38	604.33	454.00			454.00	**CONCRETE**	**825**	838.20	0.25%	20.7	748.75	1.36	**144.42**	**81%**	82.44	79.94	79.10	2.51	82.46	0.80	79.89	79.05	2.57	Refer to Note (8)			
BLOCK 17	BLOCK 17	MH 505	0.213	0.033	0.321	0.567	**10.00**	0.14	**10.14**	0.95	76.81	72.84		4.00	41.00	**45.00**	**PVC**	**300**	304.80	1.50%	13.8	123.55	1.69	**50.71**	**59%**	82.88	79.74	79.44	3.14	82.35	0.06	79.53	79.23	2.82	0.36	127.10	1.56	0.42
BLOCK 17	MH 505	EX MH 504				0.567	**10.14**	0.25	**10.39**	0.95	76.29	72.36				**45.00**	**PVC**	**300**	304.80	1.50%	25.7	123.55	1.69	**51.20**	**59%**	82.35	79.47	79.17	2.88	82.46		79.09	78.78	3.37	0.36	127.10	1.56	0.42
EAST ORLEANS RIDGE SUBDIVISION (8)	EX MH 504	EX MH 503	Refer to Note 8			6.56	**16.31**	0.67	**16.98**	11.38	58.84	669.32				**499.00**	**CONCRETE**	**900**	914.40	0.25%	57.7	944.29	1.44	**274.97**	**71%**	82.46	79.09	78.17	**3.37**	81.85	0.07	78.94	78.03	**2.91**	0.53	471.83	**1.46**	**0.52**

Design Parameters (Per OSDG)

Manning's Coefficient =	0.013
1:2 Year Intensity =	732.951 / (Tc + 6.199)^0.810

Note: Tc is the time of concentration in minutes

Drainage Areas Breakdown

Total Site Area:	0.554 ha	
Controlled Area Within Site Boundaries:	0.534 ha →	This area is part of the total site area (0.554 ha)
Existing Areas Captured Within Site:	0.033 ha	
Total Captured Areas:	0.567 ha	
Uncontrolled Area - Outlet to Page:	0.020 ha →	This area is part of the total site area (0.554 ha)

Notes on Plug Flows

(1) Controlled Flow rate downstream of EXST MH504 as part of the East Orleans Ridge Subdivision
(2) Total flow rates of roof drains for Buildings E and F
(3) Cistern Outflow Rate

Notes on Peak Flow and Pipe Sizing

(4) Allowable Release Rate from Site (45L/s) is equal to the sum of Cistern Flow (41L/s) and Roof Drain Flow (4L/s)
(5) Downstream Peak Flow is equal to allowable release rate for site (45 L/s) combined with the existing controlled flows from the subdivision (454 L/s)
(6) Pipes are conservatively sized for 1:2 Year Peak Flow Rate
(7) Actual Velocities based on actual peak flows from Note 5
(8) Additional details from Existing Sewers can be found within East Orleans Ridge Subdivision Design Sheet.

REAR YARD CATCH BASIN TABLE

Street Name	CB ID Number	T/G	Inlet					Outlet				Drop (m)	CATCH BASIN TYPE	ICD TYPE
			Pipe Dia. (mm)	Pipe Length (m)	Slope	Invert	Cover	Pipe Dia. (mm)	Pipe Length (m)	Invert	COVER (m)			
BLOCK 17	CB124	81.05	-	-	-	-		250	23.32	79.470	1.33		CATCH BASIN ELBOW PER CITY STANDARD S30	NO ICD
	CB122	80.80	-	-	-	-		250	12.24	79.350	1.20		CATCH BASIN ELBOW PER CITY STANDARD S30	NO ICD
	CB123	81.35	250	23.32	1.0%	79.237	1.86	250	3.49	79.168	1.93	0.06	600x600mm PRECAST CONCRETE PER OPSD 705.010 C/W FRAME AND COVER AS PER CITY OF OTTAWA S19	Vortex_ICD_70
			250	12.24	1.0%	79.228	1.87							
	CB125	82.00	-	-	-	-	-	200	1.90	80.200	1.60		600x600mm PRECAST CONCRETE PER OPSD 705.010 C/W FRAME AND COVER AS PER CITY OF OTTAWA S19	Vortex_ICD_70

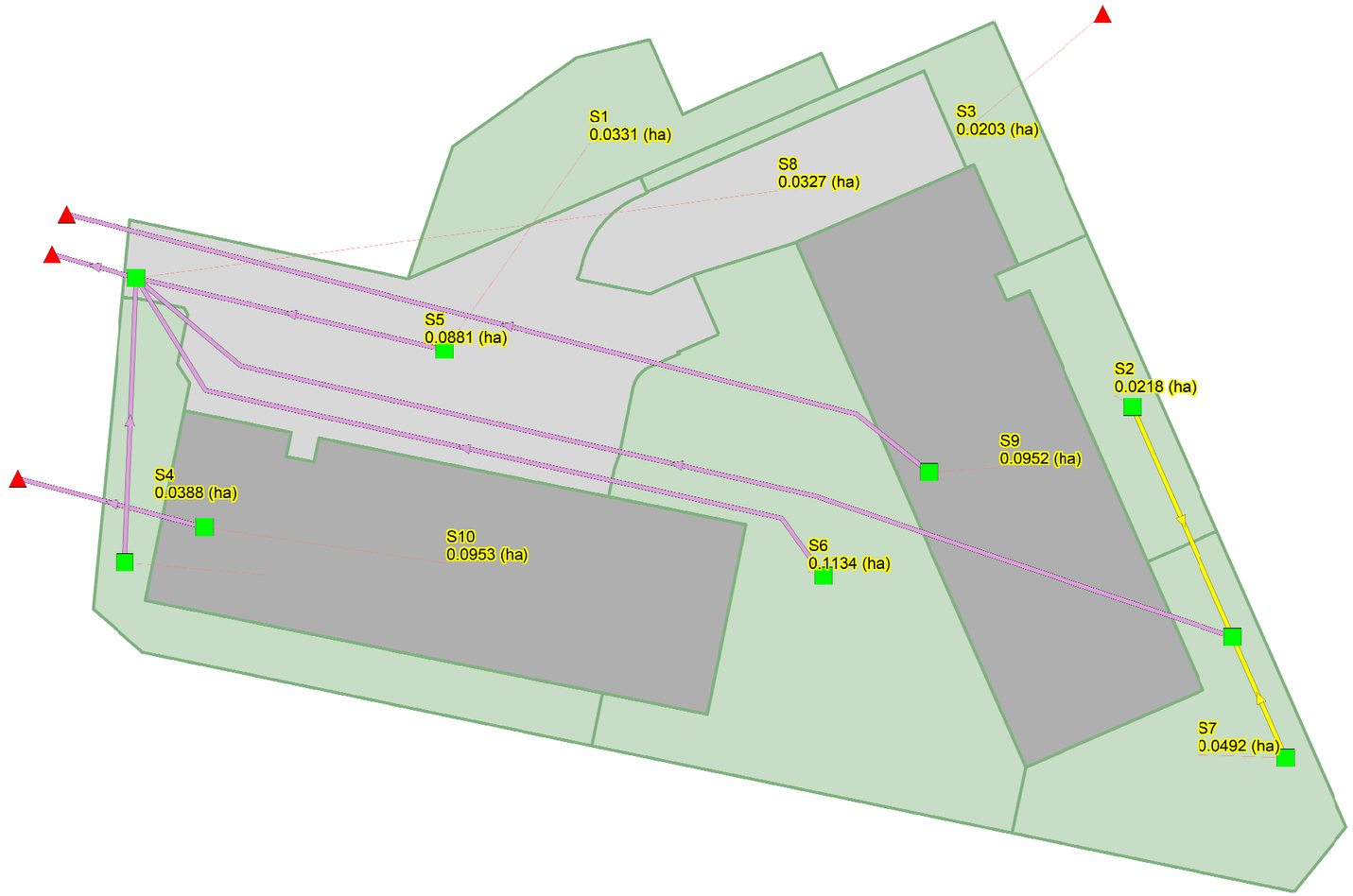

Legend

- Outfalls
- Storages
- Conduits
- Outlets

Subcatchments

- Rear-Yard
- Parking Lot Area
- Ramp to Garage
- Building

N

150 m

PROJECT:

NAVAN RESIDENTIAL SITE PLAN - BLOCK 17
Ottawa, ON

DRAWING:

Overall System Model Schematic

J.L.Richards
ENGINEERS · ARCHITECTS · PLANNERS

This drawing is copyright protected and may not be reproduced or use for purposes other than execution of the described work without the express written consent of J.L. Richards & Associates Limited.

DESIGN:	ML	JLR NO.:	29899-002
DRAWN:	ML	DRAWING NO.:	Figure 3
CHECKED:	BP		

Legend

C-Factor

- Area Tributary to Subdivision (C-Factor - 0.3)
- Landscaped Areas (C-Factor - 0.2)
- Pavement Areas (C-Factor - 0.9)

PROJECT:

NAVAN RESIDENTIAL AND COMMERCIAL BLOCK 14
OTTAWA, ONTARIO

DRAWING:

OVERALL SITE IMPERVIOUSNESS

J.L.Richards
ENGINEERS · ARCHITECTS · PLANNERS

This drawing is copyright protected and may not be reproduced or used for purposes other than execution of the described work without express written consent of J.L. Richards & Associates Limited.

DESIGN: ML		JLR NO: 29899-002	
DRAWN: ML		DRAWING NO: **Figure**	
CHECKED: BP			

Post-Development 3-hour Chicago 1:2 year Event

```
[TITLE]
;;Project Title/Notes

[OPTIONS]
;;Option             Value
FLOW_UNITS           CMS
INFILTRATION         HORTON
FLOW_ROUTING         DYNWAVE
LINK_OFFSETS         ELEVATION
MIN_SLOPE            0
ALLOW_PONDING        NO
SKIP_STEADY_STATE    NO

START_DATE           01/01/2000
START_TIME           00:00:00
REPORT_START_DATE    01/01/2000
REPORT_START_TIME    00:00:00
END_DATE             01/01/2000
END_TIME             03:00:00
SWEEP_START          1/1
SWEEP_END            12/31
DRY_DAYS             0
REPORT_STEP          00:01:00
WET_STEP             00:05:00
DRY_STEP             00:05:00
ROUTING_STEP         5
RULE_STEP            00:00:00

INERTIAL_DAMPING     PARTIAL
NORMAL_FLOW_LIMITED  BOTH
FORCE_MAIN_EQUATION  H-W
VARIABLE_STEP        0.75
LENGTHENING_STEP     0
MIN_SURFAREA         0
MAX_TRIALS           8
HEAD_TOLERANCE       0
SYS_FLOW_TOL         5
LAT_FLOW_TOL         5
MINIMUM_STEP         0.5
THREADS              12

[EVAPORATION]
;;Data Source    Parameters
;;-------------- ----------------
CONSTANT         0.0
DRY_ONLY         NO

[RAINGAGES]
;;Name           Format    Interval SCF      Source
;;-------------- --------- -------- -------- ----------
3CHI002          INTENSITY 0:10     1.0      TIMESERIES 3CHI002
3CHI100          INTENSITY 0:10     1.0      TIMESERIES 3CHI100

[SUBCATCHMENTS]
;;Name           Rain Gage        Outlet           Area     %Imperv  Width    %Slope   CurbLen
SnowPack
;;-------------- ---------------- ---------------- -------- -------- -------- -------- -------
- ----------------
S1               3CHI002          CB120            0.0331   14.286   38.601   1.5      0
S10              3CHI002          Roof2            0.0953   100      18       1        0
S2               3CHI002          CB124            0.0218   11.125   38.94    2.1      0
S3               3CHI002          OF2              0.0203   0        26.019   2        0
S4               3CHI002          CB125            0.0388   3.093    163.644  1.5      0
S5               3CHI002          CB120            0.0881   77.464   79.845   2        0
S6               3CHI002          CB121            0.1134   17.819   105.724  2.1      0
S7               3CHI002          CB122            0.0492   13.679   44.221   3.3      0
S8               3CHI002          St_UnGrd         0.0327   95.747   11.978   5.2      0
S9               3CHI002          Roof1            0.0952   100      18       1        0

[SUBAREAS]
;;Subcatchment   N-Imperv   N-Perv     S-Imperv   S-Perv     PctZero    RouteTo    PctRouted
;;-------------- ---------- ---------- ---------- ---------- ---------- ---------- ----------
S1               0.013      0.25       1.57       4.67       0          PERVIOUS   100
S10              0.013      0.25       1.57       4.67       0          OUTLET
S2               0.013      0.25       1.57       4.67       0          PERVIOUS   100
S3               0.013      0.25       1.57       4.67       0          PERVIOUS   100
S4               0.013      0.25       1.57       4.67       0          PERVIOUS   100
S5               0.013      0.25       1.57       4.67       0          OUTLET
S6               0.013      0.25       1.57       4.67       0          OUTLET
S7               0.013      0.25       1.57       4.67       0          PERVIOUS   100
S8               0.013      0.25       1.57       4.67       0          PERVIOUS   100
S9               0.013      0.25       1.57       4.67       0          OUTLET

[INFILTRATION]
;;Subcatchment   Param1     Param2     Param3     Param4     Param5
;;-------------- ---------- ---------- ---------- ---------- ----------
S1               76.2       13.2       4.14       7          0
S10              76.2       13.2       4.14       7          0
S2               76.2       13.2       4.14       7          0
S3               76.2       13.2       4.14       7          0
S4               76.2       13.2       4.14       7          0
S5               76.2       13.2       4.14       7          0
S6               76.2       13.2       4.14       7          0
S7               76.2       13.2       4.14       7          0
S8               76.2       13.2       4.14       7          0
S9               76.2       13.2       4.14       7          0

[OUTFALLS]
;;Name           Elevation  Type       Stage Data       Gated    Route To
;;-------------- ---------- ---------- ---------------- -------- ----------------
MH505            78         NORMAL                      NO
OF2              0          FREE                        NO
OF3              78.88      NORMAL                      NO
OF4              78.88      NORMAL                      NO

[STORAGE]
;;Name           Elev.    MaxDepth   InitDepth  Shape        Curve Name/Params
SurDepth Fevap    Psi      Ksat      IMD
;;-------------- -------- ---------- ---------- ----------- ---------------------------- -----
--- -------- -------- -------- --------
CB120            82.1     0.3        0          TABULAR     CB120                        0
0
CB121            82.28    0.3        0          TABULAR     CB121                        0
0
CB122            79.35    1.7        0          TABULAR     CB122                        0
0
CB123            79.168   2.182      0          TABULAR     CB123                        0
0
CB124            79.47    1.78       0          TABULAR     CB124                        0
0
CB125            80.2     2          0          TABULAR     CB125                        0
0
Roof1            88.85    0.15       0          FUNCTIONAL  0         0         635      0
0
Roof2            88.85    0.15       0          FUNCTIONAL  0         0         635      0
0
St_UnGrd         78       1          0          FUNCTIONAL  0         0         49       0
0

[CONDUITS]
;;Name           From Node        To Node          Length     Roughness  InOffset   OutOffset
InitFlow   MaxFlow
;;-------------- ---------------- ---------------- ---------- ---------- ---------- ----------
---------- ----------
C1               CB124            CB123            23.322     0.013      79.47      79.24
0          0.04
C2               CB122            CB123            12.244     0.013      79.35      79.228
0          0.04

[OUTLETS]
;;Name           From Node        To Node          Offset     Type             QTable/Qcoeff
Qexpon     Gated
;;-------------- ---------------- ---------------- ---------- ---------------- ----------------
- ---------- --------
BLDG_E           Roof2            OF4              88.85      TABULAR/HEAD     O_Roof2
NO
BLDG_F           Roof1            OF3              88.85      TABULAR/HEAD     O_Roof1
NO
CB120            CB120            St_UnGrd         82.1       TABULAR/HEAD     ZURN_Z150F-6NH
NO
CB121            CB121            St_UnGrd         82.28      TABULAR/HEAD     ZURN_Z150F-6NH
NO
CB123            CB123            St_UnGrd         79.168     TABULAR/HEAD     Vortex_ICD_70
NO
CB125            CB125            St_UnGrd         80.2       TABULAR/HEAD     Vortex_ICD_70
NO
OL1              St_UnGrd         MH505            78         TABULAR/HEAD     O_St_UnGrd
NO

[XSECTIONS]
;;Link           Shape        Geom1            Geom2      Geom3      Geom4      Barrels
Culvert
;;-------------- ------------ ---------------- ---------- ---------- ---------- ---------- ---
-------
C1               CIRCULAR     0.25             0          0          0          1
C2               CIRCULAR     0.25             0          0          0          1

[LOSSES]
;;Link           Kentry     Kexit      Kavg       Flap Gate  Seepage
;;-------------- ---------- ---------- ---------- ---------- ----------

[INFLOWS]
;;Node           Constituent      Time Series      Type     Mfactor  Sfactor  Baseline Pattern
;;-------------- ---------------- ---------------- -------- -------- -------- -------- -------
-
St_UnGrd         FLOW             InfiltratedInflow FLOW     1.0      1        0

[CURVES]
;;Name           Type       X-Value    Y-Value
;;-------------- ---------- ---------- ----------
;CBMH Inlet Capture Curve based on the OSDG Appendix 7-A
CBMH             Rating     0          0
CBMH                        0.122      0.06
CBMH                        0.183      0.073
CBMH                        0.2        0.076
CBMH                        0.243      0.084
CBMH                        0.305      0.094

DI_GRATE_A_OPSD403.01 Rating     0.02       0.00762
DI_GRATE_A_OPSD403.01            0.04       0.01524
DI_GRATE_A_OPSD403.01            0.08       0.0381
DI_GRATE_A_OPSD403.01            0.12       0.06858
DI_GRATE_A_OPSD403.01            0.2        0.1524
DI_GRATE_A_OPSD403.01            0.26       0.23622
DI_GRATE_A_OPSD403.01            0.36       0.4572
DI_GRATE_A_OPSD403.01            0.46       0.6858

DI_GRATE_C_OPSD403.01 Rating     0.02       0.01465
DI_GRATE_C_OPSD403.01            0.04       0.0293
DI_GRATE_C_OPSD403.01            0.08       0.07325
DI_GRATE_C_OPSD403.01            0.12       0.13185
DI_GRATE_C_OPSD403.01            0.2        0.293
DI_GRATE_C_OPSD403.01            0.26       0.45415
DI_GRATE_C_OPSD403.01            0.36       0.879
DI_GRATE_C_OPSD403.01            0.46       1.3185

Les Produits MURPHCO Ltée Rating     0          0
Les Produits MURPHCO Ltée            0.0127     4E-05
Les Produits MURPHCO Ltée            0.0254     0.00019
Les Produits MURPHCO Ltée            0.0381     0.00032
Les Produits MURPHCO Ltée            0.0508     0.00051
Les Produits MURPHCO Ltée            0.0635     0.00064
Les Produits MURPHCO Ltée            0.0762     0.00083
Les Produits MURPHCO Ltée            0.0889     0.00093
Les Produits MURPHCO Ltée            0.1016     0.00101
Les Produits MURPHCO Ltée            0.1143     0.00111
Les Produits MURPHCO Ltée            0.127      0.0012
Les Produits MURPHCO Ltée            0.1397     0.00128
Les Produits MURPHCO Ltée            0.1524     0.00135

;Reversed Flow from rear yard manhole_Lid to the Street
Manhole_Lid      Rating     0          0
Manhole_Lid                 0.11       0
Manhole_Lid                 0.2        0.187
Manhole_Lid                 0.3        0.395
Manhole_Lid                 0.4        0.602
Manhole_Lid                 0.5        0.81
Manhole_Lid                 0.6        1.018
Manhole_Lid                 0.7        1.225
Manhole_Lid                 0.8        1.433
Manhole_Lid                 0.9        1.641
Manhole_Lid                 1          1.848

;Tempest Rating Curve for MHF IPEX TYPE A, No grate allowance
MHF_IPEX_TYPE_A  Rating     0          0
MHF_IPEX_TYPE_A             0.1        0.0057
MHF_IPEX_TYPE_A             0.2        0.0081
MHF_IPEX_TYPE_A             0.3        0.0099
MHF_IPEX_TYPE_A             0.4        0.0114
MHF_IPEX_TYPE_A             0.5        0.0128
MHF_IPEX_TYPE_A             0.6        0.014
MHF_IPEX_TYPE_A             0.7        0.0151
MHF_IPEX_TYPE_A             0.8        0.0162
MHF_IPEX_TYPE_A             0.9        0.0172
MHF_IPEX_TYPE_A             1          0.0181
MHF_IPEX_TYPE_A             1.2        0.0198
MHF_IPEX_TYPE_A             1.4        0.0214
MHF_IPEX_TYPE_A             1.6        0.0229
MHF_IPEX_TYPE_A             1.8        0.0243
MHF_IPEX_TYPE_A             2          0.0256
MHF_IPEX_TYPE_A             2.5        0.0286
MHF_IPEX_TYPE_A             3          0.0313

;Tempest Rating Curve for MHF IPEX TYPE B, No grate allowance
MHF_IPEX_TYPE_B  Rating     0          0
MHF_IPEX_TYPE_B             0.1        0.0081
MHF_IPEX_TYPE_B             0.2        0.0115
MHF_IPEX_TYPE_B             0.3        0.0141
MHF_IPEX_TYPE_B             0.4        0.0162
MHF_IPEX_TYPE_B             0.5        0.0182
MHF_IPEX_TYPE_B             0.6        0.0199
MHF_IPEX_TYPE_B             0.7        0.0215
MHF_IPEX_TYPE_B             0.8        0.023
MHF_IPEX_TYPE_B             0.9        0.0244
MHF_IPEX_TYPE_B             1          0.0257
MHF_IPEX_TYPE_B             1.2        0.0281
MHF_IPEX_TYPE_B             1.4        0.0304
MHF_IPEX_TYPE_B             1.6        0.0325
MHF_IPEX_TYPE_B             1.8        0.0344
MHF_IPEX_TYPE_B             2          0.0363
MHF_IPEX_TYPE_B             2.5        0.0406
MHF_IPEX_TYPE_B             3          0.0445

;Tempest Rating Curve for MHF IPEX TYPE C, No grate allowance
MHF_IPEX_TYPE_C  Rating     0          0
MHF_IPEX_TYPE_C             0.1        0.0106
MHF_IPEX_TYPE_C             0.2        0.015
MHF_IPEX_TYPE_C             0.3        0.0183
MHF_IPEX_TYPE_C             0.4        0.0212
MHF_IPEX_TYPE_C             0.5        0.0237
MHF_IPEX_TYPE_C             0.6        0.0259
MHF_IPEX_TYPE_C             0.7        0.028
MHF_IPEX_TYPE_C             0.8        0.0299
MHF_IPEX_TYPE_C             0.9        0.0317
MHF_IPEX_TYPE_C             1          0.0335
MHF_IPEX_TYPE_C             1.2        0.0366
MHF_IPEX_TYPE_C             1.4        0.0396
MHF_IPEX_TYPE_C             1.6        0.0423
MHF_IPEX_TYPE_C             1.8        0.0449
```

```
MHF_IPEX_TYPE_C             2          0.0473
MHF_IPEX_TYPE_C             2.5        0.0529
MHF_IPEX_TYPE_C             3          0.0579

;Tempest Rating Curve for MHF IPEX TYPE D, No grate allowance
MHF_IPEX_TYPE_D  Rating     0          0
MHF_IPEX_TYPE_D             0.1        0.0154
MHF_IPEX_TYPE_D             0.2        0.0217
MHF_IPEX_TYPE_D             0.3        0.0266
MHF_IPEX_TYPE_D             0.4        0.0307
MHF_IPEX_TYPE_D             0.5        0.0343
MHF_IPEX_TYPE_D             0.6        0.0376
MHF_IPEX_TYPE_D             0.7        0.0406
MHF_IPEX_TYPE_D             0.8        0.0434
MHF_IPEX_TYPE_D             0.9        0.0461
MHF_IPEX_TYPE_D             1          0.0485
MHF_IPEX_TYPE_D             1.2        0.0532
MHF_IPEX_TYPE_D             1.4        0.0574
MHF_IPEX_TYPE_D             1.6        0.0614
MHF_IPEX_TYPE_D             1.8        0.0651
MHF_IPEX_TYPE_D             2          0.0687
MHF_IPEX_TYPE_D             2.5        0.0768
MHF_IPEX_TYPE_D             3          0.0841

;Tempest Rating Curve for MHF IPEX TYPE E, No grate allowance
MHF_IPEX_TYPE_E  Rating     0          0
MHF_IPEX_TYPE_E             0.1        0.0205
MHF_IPEX_TYPE_E             0.2        0.0289
MHF_IPEX_TYPE_E             0.3        0.0355
MHF_IPEX_TYPE_E             0.4        0.0409
MHF_IPEX_TYPE_E             0.5        0.0458
MHF_IPEX_TYPE_E             0.6        0.0501
MHF_IPEX_TYPE_E             0.7        0.0542
MHF_IPEX_TYPE_E             0.8        0.0579
MHF_IPEX_TYPE_E             0.9        0.0614
MHF_IPEX_TYPE_E             1          0.0647
MHF_IPEX_TYPE_E             1.2        0.0709
MHF_IPEX_TYPE_E             1.4        0.0766
MHF_IPEX_TYPE_E             1.6        0.0819
MHF_IPEX_TYPE_E             1.8        0.0868
MHF_IPEX_TYPE_E             2          0.0915
MHF_IPEX_TYPE_E             2.5        0.1023
MHF_IPEX_TYPE_E             3          0.1121

O_Roof1          Rating     0          0
O_Roof1                     0.001      0.002
O_Roof1                     0.15       0.002

O_Roof2          Rating     0          0
O_Roof2                     0.001      0.002
O_Roof2                     0.15       0.002

O_St_L1          Rating     0          0
O_St_L1                     0.001      0.003
O_St_L1                     0.35       0.003

O_St_L2          Rating     0          0
O_St_L2                     0.001      0.002
O_St_L2                     0.35       0.002

O_St_L3          Rating     0          0
O_St_L3                     0.001      0.0137
O_St_L3                     0.35       0.0137

O_St_UnGrd       Rating     0          0
O_St_UnGrd                  0.01       0.041
O_St_UnGrd                  1          0.041

;Tempest Rating Curve for Vortex ICD 100, No grate allowance
Vortex_ICD_100   Rating     0          0
Vortex_ICD_100              0.1        0.0028
Vortex_ICD_100              0.2        0.004
Vortex_ICD_100              0.3        0.0049
Vortex_ICD_100              0.4        0.0056
Vortex_ICD_100              0.5        0.0063
Vortex_ICD_100              0.6        0.0069
Vortex_ICD_100              0.7        0.0075
Vortex_ICD_100              0.8        0.008
Vortex_ICD_100              0.9        0.0085
Vortex_ICD_100              1          0.0089
Vortex_ICD_100              1.2        0.0098
Vortex_ICD_100              1.4        0.0106
Vortex_ICD_100              1.6        0.0113
Vortex_ICD_100              1.8        0.012
Vortex_ICD_100              2          0.0126
Vortex_ICD_100              2.5        0.0141
Vortex_ICD_100              3          0.0155

;Tempest Rating Curve for Vortex ICD 105, No grate allowance
Vortex_ICD_105   Rating     0          0
Vortex_ICD_105              0.1        0.0031
Vortex_ICD_105              0.2        0.0044
Vortex_ICD_105              0.3        0.0054
Vortex_ICD_105              0.4        0.0062
Vortex_ICD_105              0.5        0.0069
Vortex_ICD_105              0.6        0.0076
Vortex_ICD_105              0.7        0.0082
Vortex_ICD_105              0.8        0.0088
Vortex_ICD_105              0.9        0.0093
Vortex_ICD_105              1          0.0098
Vortex_ICD_105              1.2        0.0107
Vortex_ICD_105              1.4        0.0116
Vortex_ICD_105              1.6        0.0124
Vortex_ICD_105              1.8        0.0131
Vortex_ICD_105              2          0.0139
Vortex_ICD_105              2.5        0.0155
Vortex_ICD_105              3          0.017

;Tempest Rating Curve for Vortex ICD 40, No grate allowance
Vortex_ICD_40    Rating     0          0
Vortex_ICD_40               0.1        0.0004
Vortex_ICD_40               0.2        0.0006
Vortex_ICD_40               0.3        0.0007
Vortex_ICD_40               0.4        0.0009
Vortex_ICD_40               0.5        0.001
Vortex_ICD_40               0.6        0.001
Vortex_ICD_40               0.7        0.0011
Vortex_ICD_40               0.8        0.0012
Vortex_ICD_40               0.9        0.0013
Vortex_ICD_40               1          0.0014
Vortex_ICD_40               1.2        0.0015
Vortex_ICD_40               1.4        0.0016
Vortex_ICD_40               1.6        0.0017
Vortex_ICD_40               1.8        0.0018
Vortex_ICD_40               2          0.0019
Vortex_ICD_40               2.5        0.0022
Vortex_ICD_40               3          0.0024

;Tempest Rating Curve for Vortex ICD 45, No grate allowance
Vortex_ICD_45    Rating     0          0
Vortex_ICD_45               0.1        0.0006
Vortex_ICD_45               0.2        0.0008
Vortex_ICD_45               0.3        0.001
Vortex_ICD_45               0.4        0.0011
Vortex_ICD_45               0.5        0.0013
Vortex_ICD_45               0.6        0.0014
Vortex_ICD_45               0.7        0.0015
Vortex_ICD_45               0.8        0.0016
Vortex_ICD_45               0.9        0.0017
Vortex_ICD_45               1          0.0018
Vortex_ICD_45               1.2        0.002
Vortex_ICD_45               1.4        0.0021
Vortex_ICD_45               1.6        0.0023
Vortex_ICD_45               1.8        0.0024
Vortex_ICD_45               2          0.0026
Vortex_ICD_45               2.5        0.0029
Vortex_ICD_45               3          0.0031

;Tempest Rating Curve for Vortex ICD 50, No grate allowance
Vortex_ICD_50    Rating     0          0
Vortex_ICD_50               0.1        0.0007
Vortex_ICD_50               0.2        0.001
Vortex_ICD_50               0.3        0.0012
Vortex_ICD_50               0.4        0.0014
Vortex_ICD_50               0.5        0.0016
Vortex_ICD_50               0.6        0.0018
Vortex_ICD_50               0.7        0.0019
Vortex_ICD_50               0.8        0.002
Vortex_ICD_50               0.9        0.0021
Vortex_ICD_50               1          0.0023
Vortex_ICD_50               1.2        0.0025
Vortex_ICD_50               1.4        0.0027
Vortex_ICD_50               1.6        0.0029
Vortex_ICD_50               1.8        0.003
Vortex_ICD_50               2          0.0032
Vortex_ICD_50               2.5        0.0036
Vortex_ICD_50               3          0.0039

;Tempest Rating Curve for Vortex ICD 55, No grate allowance
Vortex_ICD_55    Rating     0          0
Vortex_ICD_55               0.1        0.0009
Vortex_ICD_55               0.2        0.0012
Vortex_ICD_55               0.3        0.0015
Vortex_ICD_55               0.4        0.0017
Vortex_ICD_55               0.5        0.0019
Vortex_ICD_55               0.6        0.0021
Vortex_ICD_55               0.7        0.0023
Vortex_ICD_55               0.8        0.0024
Vortex_ICD_55               0.9        0.0026
Vortex_ICD_55               1          0.0027
Vortex_ICD_55               1.2        0.003
Vortex_ICD_55               1.4        0.0032
Vortex_ICD_55               1.6        0.0034
Vortex_ICD_55               1.8        0.0036
Vortex_ICD_55               2          0.0038
Vortex_ICD_55               2.5        0.0043
Vortex_ICD_55               3          0.0047

;Tempest Rating Curve for Vortex ICD 60, No grate allowance
Vortex_ICD_60    Rating     0          0
Vortex_ICD_60               0.1        0.0011
Vortex_ICD_60               0.2        0.0015
Vortex_ICD_60               0.3        0.0018
Vortex_ICD_60               0.4        0.0021
Vortex_ICD_60               0.5        0.0023
Vortex_ICD_60               0.6        0.0025
Vortex_ICD_60               0.7        0.0027
Vortex_ICD_60               0.8        0.0029
Vortex_ICD_60               0.9        0.0031
Vortex_ICD_60               1          0.0032
Vortex_ICD_60               1.2        0.0036
Vortex_ICD_60               1.4        0.0038
Vortex_ICD_60               1.6        0.0041
Vortex_ICD_60               1.8        0.0043
Vortex_ICD_60               2          0.0046
Vortex_ICD_60               2.5        0.0051
Vortex_ICD_60               3          0.0056

;Tempest Rating Curve for Vortex ICD 65, No grate allowance
Vortex_ICD_65    Rating     0          0
Vortex_ICD_65               0.1        0.0012
Vortex_ICD_65               0.2        0.0016
Vortex_ICD_65               0.3        0.002
Vortex_ICD_65               0.4        0.0023
Vortex_ICD_65               0.5        0.0025
Vortex_ICD_65               0.6        0.0028
Vortex_ICD_65               0.7        0.003
Vortex_ICD_65               0.8        0.0032
Vortex_ICD_65               0.9        0.0034
Vortex_ICD_65               1          0.0036
Vortex_ICD_65               1.2        0.004
Vortex_ICD_65               1.4        0.0043
Vortex_ICD_65               1.6        0.0046
Vortex_ICD_65               1.8        0.0049
Vortex_ICD_65               2          0.0051
Vortex_ICD_65               2.5        0.0057
Vortex_ICD_65               3          0.0063

;Tempest Rating Curve for Vortex ICD 70, No grate allowance
Vortex_ICD_70    Rating     0          0
Vortex_ICD_70               0.1        0.0013
Vortex_ICD_70               0.2        0.0019
Vortex_ICD_70               0.3        0.0023
Vortex_ICD_70               0.4        0.0027
Vortex_ICD_70               0.5        0.003
Vortex_ICD_70               0.6        0.0033
Vortex_ICD_70               0.7        0.0036
Vortex_ICD_70               0.8        0.0038
Vortex_ICD_70               0.9        0.0041
Vortex_ICD_70               1          0.0043
Vortex_ICD_70               1.2        0.0047
Vortex_ICD_70               1.4        0.0051
Vortex_ICD_70               1.6        0.0055
Vortex_ICD_70               1.8        0.0058
Vortex_ICD_70               2          0.0061
Vortex_ICD_70               2.5        0.0068
Vortex_ICD_70               3          0.0075

;Tempest Rating Curve for Vortex ICD 75, No grate allowance
Vortex_ICD_75    Rating     0          0
Vortex_ICD_75               0.1        0.0016
Vortex_ICD_75               0.2        0.0022
Vortex_ICD_75               0.3        0.0027
Vortex_ICD_75               0.4        0.0032
Vortex_ICD_75               0.5        0.0035
Vortex_ICD_75               0.6        0.0039
Vortex_ICD_75               0.7        0.0042
Vortex_ICD_75               0.8        0.0045
Vortex_ICD_75               0.9        0.0048
Vortex_ICD_75               1          0.005
Vortex_ICD_75               1.2        0.0055
Vortex_ICD_75               1.4        0.0059
Vortex_ICD_75               1.6        0.0063
Vortex_ICD_75               1.8        0.0067
Vortex_ICD_75               2          0.0071
Vortex_ICD_75               2.5        0.0079
Vortex_ICD_75               3          0.0087

;Tempest Rating Curve for Vortex ICD 80, No grate allowance
Vortex_ICD_80    Rating     0          0
Vortex_ICD_80               0.1        0.0018
Vortex_ICD_80               0.2        0.0026
Vortex_ICD_80               0.3        0.0031
Vortex_ICD_80               0.4        0.0036
Vortex_ICD_80               0.5        0.004
Vortex_ICD_80               0.6        0.0044
Vortex_ICD_80               0.7        0.0048
Vortex_ICD_80               0.8        0.0051
Vortex_ICD_80               0.9        0.0054
Vortex_ICD_80               1          0.0057
Vortex_ICD_80               1.2        0.0063
Vortex_ICD_80               1.4        0.0068
Vortex_ICD_80               1.6        0.0072
Vortex_ICD_80               1.8        0.0077
Vortex_ICD_80               2          0.0081
Vortex_ICD_80               2.5        0.009
Vortex_ICD_80               3          0.0099

;Tempest Rating Curve for Vortex ICD 85, No grate allowance
Vortex_ICD_85    Rating     0          0
Vortex_ICD_85               0.1        0.002
Vortex_ICD_85               0.2        0.0029
Vortex_ICD_85               0.3        0.0035
Vortex_ICD_85               0.4        0.0041
Vortex_ICD_85               0.5        0.0045
Vortex_ICD_85               0.6        0.005
Vortex_ICD_85               0.7        0.0054
Vortex_ICD_85               0.8        0.0057
```

```
Vortex_ICD_85                0.9        0.0061
Vortex_ICD_85                1          0.0064
Vortex_ICD_85                1.2        0.007
Vortex_ICD_85                1.4        0.0076
Vortex_ICD_85                1.6        0.0081
Vortex_ICD_85                1.8        0.0086
Vortex_ICD_85                2          0.0091
Vortex_ICD_85                2.5        0.0101
Vortex_ICD_85                3          0.0111

;Tempest Rating Curve for Vortex ICD 90, No grate allowance
Vortex_ICD_90    Rating      0          0
Vortex_ICD_90                0.1        0.0022
Vortex_ICD_90                0.2        0.0032
Vortex_ICD_90                0.3        0.0039
Vortex_ICD_90                0.4        0.0045
Vortex_ICD_90                0.5        0.0051
Vortex_ICD_90                0.6        0.0055
Vortex_ICD_90                0.7        0.006
Vortex_ICD_90                0.8        0.0064
Vortex_ICD_90                0.9        0.0068
Vortex_ICD_90                1          0.0072
Vortex_ICD_90                1.2        0.0079
Vortex_ICD_90                1.4        0.0085
Vortex_ICD_90                1.6        0.0091
Vortex_ICD_90                1.8        0.0096
Vortex_ICD_90                2          0.0102
Vortex_ICD_90                2.5        0.0114
Vortex_ICD_90                3          0.0125

;Tempest Rating Curve for Vortex ICD 95, No grate allowance
Vortex_ICD_95    Rating      0          0
Vortex_ICD_95                0.1        0.0026
Vortex_ICD_95                0.2        0.0036
Vortex_ICD_95                0.3        0.0044
Vortex_ICD_95                0.4        0.0051
Vortex_ICD_95                0.5        0.0057
Vortex_ICD_95                0.6        0.0062
Vortex_ICD_95                0.7        0.0067
Vortex_ICD_95                0.8        0.0071
Vortex_ICD_95                0.9        0.0076
Vortex_ICD_95                1          0.008
Vortex_ICD_95                1.2        0.0087
Vortex_ICD_95                1.4        0.0094
Vortex_ICD_95                1.6        0.0101
Vortex_ICD_95                1.8        0.0107
Vortex_ICD_95                2          0.0113
Vortex_ICD_95                2.5        0.0126
Vortex_ICD_95                3          0.0138

;From Zurn Manual RD178
ZURN_Z150F-6NH   Rating      0          0
ZURN_Z150F-6NH               0.0127     0.00503838308477861
ZURN_Z150F-6NH               0.0257     0.0132420013231177
ZURN_Z150F-6NH               0.0384     0.0234992054543888
ZURN_Z150F-6NH               0.0508     0.0357128365761305
ZURN_Z150F-6NH               0.0765     0.0425019726111045
ZURN_Z150F-6NH               0.1024     0.0433196215564931

CB120            Storage     0          0.36
CB120                        0.3        338.53

CB121            Storage     0          0.36
CB121                        0.3        292.64

CB122            Storage     0          0.073
CB122                        1.45       0.073
CB122                        1.7        74.71

CB123            Storage     0          0.36
CB123                        2.182      0.36

CB124            Storage     0          0.073
CB124                        1.58       0.073
CB124                        1.78       34.68

CB125            Storage     0          0.36
CB125                        1.65       0.36
CB125                        1.95       37.3
CB125                        2          37.3

[TIMESERIES]
;;Name           Date       Time       Value
;;-------------- ---------- ---------- ---------
;Rainfall (mm/hr)
3CHI002          01/01/2000 00:00:00   2.491
3CHI002          01/01/2000 00:10:00   2.966
3CHI002          01/01/2000 00:20:00   3.696
3CHI002          01/01/2000 00:30:00   4.976
3CHI002          01/01/2000 00:40:00   7.828
3CHI002          01/01/2000 00:50:00   19.966
3CHI002          01/01/2000 01:00:00   76.805
3CHI002          01/01/2000 01:10:00   22.777
3CHI002          01/01/2000 01:20:00   11.852
3CHI002          01/01/2000 01:30:00   8.025
3CHI002          01/01/2000 01:40:00   6.096
3CHI002          01/01/2000 01:50:00   4.938
3CHI002          01/01/2000 02:00:00   4.165
3CHI002          01/01/2000 02:10:00   3.613
3CHI002          01/01/2000 02:20:00   3.197
3CHI002          01/01/2000 02:30:00   2.873
3CHI002          01/01/2000 02:40:00   2.613
3CHI002          01/01/2000 02:50:00   2.4
3CHI002          01/01/2000 03:00:00   0

;Rainfall (mm/hr)
3CHI100          01/01/2000 00:00:00   5.339
3CHI100          01/01/2000 00:10:00   6.376
3CHI100          01/01/2000 00:20:00   7.977
3CHI100          01/01/2000 00:30:00   10.797
3CHI100          01/01/2000 00:40:00   17.136
3CHI100          01/01/2000 00:50:00   45.128
3CHI100          01/01/2000 01:00:00   178.107
3CHI100          01/01/2000 01:10:00   51.056
3CHI100          01/01/2000 01:20:00   26.163
3CHI100          01/01/2000 01:30:00   17.571
3CHI100          01/01/2000 01:40:00   13.277
3CHI100          01/01/2000 01:50:00   10.712
3CHI100          01/01/2000 02:00:00   9.008
3CHI100          01/01/2000 02:10:00   7.793
3CHI100          01/01/2000 02:20:00   6.883
3CHI100          01/01/2000 02:30:00   6.174
3CHI100          01/01/2000 02:40:00   5.607
3CHI100          01/01/2000 02:50:00   5.142
3CHI100          01/01/2000 03:00:00   0

;Sum of Infiltrated flow from above the garage slab calculated from Infiltration graphs for S6
multiplied by the total pervious area above the garage.
InfiltratedInflow 01/01/2000 00:01:00   0.0004756018
InfiltratedInflow 01/01/2000 00:02:00   0.0004756018
InfiltratedInflow 01/01/2000 00:03:00   0.0004756018
InfiltratedInflow 01/01/2000 00:04:00   0.0004756018
InfiltratedInflow 01/01/2000 00:05:00   0.0004756018
InfiltratedInflow 01/01/2000 00:06:00   0.0004756018
InfiltratedInflow 01/01/2000 00:07:00   0.0004756018
InfiltratedInflow 01/01/2000 00:08:00   0.0004756018
InfiltratedInflow 01/01/2000 00:09:00   0.0004756018
InfiltratedInflow 01/01/2000 00:10:00   0.0005662926
InfiltratedInflow 01/01/2000 00:11:00   0.0005662926
InfiltratedInflow 01/01/2000 00:12:00   0.0005662926
InfiltratedInflow 01/01/2000 00:13:00   0.0005662926
InfiltratedInflow 01/01/2000 00:14:00   0.0005662926
InfiltratedInflow 01/01/2000 00:15:00   0.0005662926
InfiltratedInflow 01/01/2000 00:16:00   0.0005662926
InfiltratedInflow 01/01/2000 00:17:00   0.0005662926
InfiltratedInflow 01/01/2000 00:18:00   0.0005662926
InfiltratedInflow 01/01/2000 00:19:00   0.0005662926
InfiltratedInflow 01/01/2000 00:20:00   0.00070567
InfiltratedInflow 01/01/2000 00:21:00   0.00070567
InfiltratedInflow 01/01/2000 00:22:00   0.00070567
InfiltratedInflow 01/01/2000 00:23:00   0.00070567
InfiltratedInflow 01/01/2000 00:24:00   0.00070567
InfiltratedInflow 01/01/2000 00:25:00   0.00070567
InfiltratedInflow 01/01/2000 00:26:00   0.00070567
InfiltratedInflow 01/01/2000 00:27:00   0.00070567
InfiltratedInflow 01/01/2000 00:28:00   0.00070567
InfiltratedInflow 01/01/2000 00:29:00   0.00070567
InfiltratedInflow 01/01/2000 00:30:00   0.0009500579
InfiltratedInflow 01/01/2000 00:31:00   0.0009500579
InfiltratedInflow 01/01/2000 00:32:00   0.0009500579
InfiltratedInflow 01/01/2000 00:33:00   0.0009500579
InfiltratedInflow 01/01/2000 00:34:00   0.0009500579
InfiltratedInflow 01/01/2000 00:35:00   0.0009500579
InfiltratedInflow 01/01/2000 00:36:00   0.0009500579
InfiltratedInflow 01/01/2000 00:37:00   0.0009500579
InfiltratedInflow 01/01/2000 00:38:00   0.0009500579
InfiltratedInflow 01/01/2000 00:39:00   0.0009500579
InfiltratedInflow 01/01/2000 00:40:00   0.001494585
InfiltratedInflow 01/01/2000 00:41:00   0.001494585
InfiltratedInflow 01/01/2000 00:42:00   0.001494585
InfiltratedInflow 01/01/2000 00:43:00   0.001494585
InfiltratedInflow 01/01/2000 00:44:00   0.001494585
InfiltratedInflow 01/01/2000 00:45:00   0.001494585
InfiltratedInflow 01/01/2000 00:46:00   0.001494585
InfiltratedInflow 01/01/2000 00:47:00   0.001494585
InfiltratedInflow 01/01/2000 00:48:00   0.001494585
InfiltratedInflow 01/01/2000 00:49:00   0.001494585
InfiltratedInflow 01/01/2000 00:50:00   0.003812069
InfiltratedInflow 01/01/2000 00:51:00   0.003812069
InfiltratedInflow 01/01/2000 00:52:00   0.003812069
InfiltratedInflow 01/01/2000 00:53:00   0.003812069
InfiltratedInflow 01/01/2000 00:54:00   0.003812069
InfiltratedInflow 01/01/2000 00:55:00   0.003812069
InfiltratedInflow 01/01/2000 00:56:00   0.003812069
InfiltratedInflow 01/01/2000 00:57:00   0.003812069
InfiltratedInflow 01/01/2000 00:58:00   0.003812069
InfiltratedInflow 01/01/2000 00:59:00   0.003812069
InfiltratedInflow 01/01/2000 01:00:00   0.00898767
InfiltratedInflow 01/01/2000 01:01:00   0.00898767
InfiltratedInflow 01/01/2000 01:02:00   0.00898767
InfiltratedInflow 01/01/2000 01:03:00   0.00898767
InfiltratedInflow 01/01/2000 01:04:00   0.00898767
InfiltratedInflow 01/01/2000 01:05:00   0.007100608
InfiltratedInflow 01/01/2000 01:06:00   0.007100608
InfiltratedInflow 01/01/2000 01:07:00   0.007100608
InfiltratedInflow 01/01/2000 01:08:00   0.007100608
InfiltratedInflow 01/01/2000 01:09:00   0.007100608
InfiltratedInflow 01/01/2000 01:10:00   0.005764153
InfiltratedInflow 01/01/2000 01:11:00   0.005764153
InfiltratedInflow 01/01/2000 01:12:00   0.005764153
InfiltratedInflow 01/01/2000 01:13:00   0.005764153
InfiltratedInflow 01/01/2000 01:14:00   0.005764153
InfiltratedInflow 01/01/2000 01:15:00   0.004817648
InfiltratedInflow 01/01/2000 01:16:00   0.004817648
InfiltratedInflow 01/01/2000 01:17:00   0.004817648
InfiltratedInflow 01/01/2000 01:18:00   0.004817648
InfiltratedInflow 01/01/2000 01:19:00   0.004817648
InfiltratedInflow 01/01/2000 01:20:00   0.004147314
InfiltratedInflow 01/01/2000 01:21:00   0.004147314
InfiltratedInflow 01/01/2000 01:22:00   0.004147314
InfiltratedInflow 01/01/2000 01:23:00   0.004147314
InfiltratedInflow 01/01/2000 01:24:00   0.004147314
InfiltratedInflow 01/01/2000 01:25:00   0.00367257
InfiltratedInflow 01/01/2000 01:26:00   0.00367257
InfiltratedInflow 01/01/2000 01:27:00   0.00367257
InfiltratedInflow 01/01/2000 01:28:00   0.00367257
InfiltratedInflow 01/01/2000 01:29:00   0.00367257
InfiltratedInflow 01/01/2000 01:30:00   0.003336346
InfiltratedInflow 01/01/2000 01:31:00   0.003336346
InfiltratedInflow 01/01/2000 01:32:00   0.003336346
InfiltratedInflow 01/01/2000 01:33:00   0.003336346
InfiltratedInflow 01/01/2000 01:34:00   0.003336346
InfiltratedInflow 01/01/2000 01:35:00   0.003098226
InfiltratedInflow 01/01/2000 01:36:00   0.003098226
InfiltratedInflow 01/01/2000 01:37:00   0.003098226
InfiltratedInflow 01/01/2000 01:38:00   0.003098226
InfiltratedInflow 01/01/2000 01:39:00   0.003098226
InfiltratedInflow 01/01/2000 01:40:00   0.002929584
InfiltratedInflow 01/01/2000 01:41:00   0.002929584
InfiltratedInflow 01/01/2000 01:42:00   0.002929584
InfiltratedInflow 01/01/2000 01:43:00   0.002929584
InfiltratedInflow 01/01/2000 01:44:00   0.002929584
InfiltratedInflow 01/01/2000 01:45:00   0.002810149
InfiltratedInflow 01/01/2000 01:46:00   0.002810149
InfiltratedInflow 01/01/2000 01:47:00   0.002810149
InfiltratedInflow 01/01/2000 01:48:00   0.002810149
InfiltratedInflow 01/01/2000 01:49:00   0.002810149
InfiltratedInflow 01/01/2000 01:50:00   0.002014164
InfiltratedInflow 01/01/2000 01:51:00   0.002014164
InfiltratedInflow 01/01/2000 01:52:00   0.002014164
InfiltratedInflow 01/01/2000 01:53:00   0.002014164
InfiltratedInflow 01/01/2000 01:54:00   0.002014164
InfiltratedInflow 01/01/2000 01:55:00   0.0009428026
InfiltratedInflow 01/01/2000 01:56:00   0.0009428026
InfiltratedInflow 01/01/2000 01:57:00   0.0009428026
InfiltratedInflow 01/01/2000 01:58:00   0.0009428026
InfiltratedInflow 01/01/2000 01:59:00   0.0009428026
InfiltratedInflow 01/01/2000 02:00:00   0.0007952153
InfiltratedInflow 01/01/2000 02:01:00   0.0007952153
InfiltratedInflow 01/01/2000 02:02:00   0.0007952153
InfiltratedInflow 01/01/2000 02:03:00   0.0007952153
InfiltratedInflow 01/01/2000 02:04:00   0.0007952153
InfiltratedInflow 01/01/2000 02:05:00   0.0007952153
InfiltratedInflow 01/01/2000 02:06:00   0.0007952153
InfiltratedInflow 01/01/2000 02:07:00   0.0007952153
InfiltratedInflow 01/01/2000 02:08:00   0.0007952153
InfiltratedInflow 01/01/2000 02:09:00   0.0007952153
InfiltratedInflow 01/01/2000 02:10:00   0.000689823
InfiltratedInflow 01/01/2000 02:11:00   0.000689823
InfiltratedInflow 01/01/2000 02:12:00   0.000689823
InfiltratedInflow 01/01/2000 02:13:00   0.000689823
InfiltratedInflow 01/01/2000 02:14:00   0.000689823
InfiltratedInflow 01/01/2000 02:15:00   0.000689823
InfiltratedInflow 01/01/2000 02:16:00   0.000689823
InfiltratedInflow 01/01/2000 02:17:00   0.000689823
InfiltratedInflow 01/01/2000 02:18:00   0.000689823
InfiltratedInflow 01/01/2000 02:19:00   0.000689823
InfiltratedInflow 01/01/2000 02:20:00   0.0006103969
InfiltratedInflow 01/01/2000 02:21:00   0.0006103969
InfiltratedInflow 01/01/2000 02:22:00   0.0006103969
InfiltratedInflow 01/01/2000 02:23:00   0.0006103969
InfiltratedInflow 01/01/2000 02:24:00   0.0006103969
InfiltratedInflow 01/01/2000 02:25:00   0.0006103969
InfiltratedInflow 01/01/2000 02:26:00   0.0006103969
InfiltratedInflow 01/01/2000 02:27:00   0.0006103969
InfiltratedInflow 01/01/2000 02:28:00   0.0006103969
InfiltratedInflow 01/01/2000 02:29:00   0.0006103969
InfiltratedInflow 01/01/2000 02:30:00   0.0005485362
InfiltratedInflow 01/01/2000 02:31:00   0.0005485362
InfiltratedInflow 01/01/2000 02:32:00   0.0005485362
InfiltratedInflow 01/01/2000 02:33:00   0.0005485362
InfiltratedInflow 01/01/2000 02:34:00   0.0005485362
InfiltratedInflow 01/01/2000 02:35:00   0.0005485362
InfiltratedInflow 01/01/2000 02:36:00   0.0005485362
InfiltratedInflow 01/01/2000 02:37:00   0.0005485362
InfiltratedInflow 01/01/2000 02:38:00   0.0005485362
InfiltratedInflow 01/01/2000 02:39:00   0.0005485362
InfiltratedInflow 01/01/2000 02:40:00   0.000498895
InfiltratedInflow 01/01/2000 02:41:00   0.000498895
InfiltratedInflow 01/01/2000 02:42:00   0.000498895
InfiltratedInflow 01/01/2000 02:43:00   0.000498895
InfiltratedInflow 01/01/2000 02:44:00   0.000498895
InfiltratedInflow 01/01/2000 02:45:00   0.000498895
InfiltratedInflow 01/01/2000 02:46:00   0.000498895
InfiltratedInflow 01/01/2000 02:47:00   0.000498895
InfiltratedInflow 01/01/2000 02:48:00   0.000498895
InfiltratedInflow 01/01/2000 02:49:00   0.000498895
InfiltratedInflow 01/01/2000 02:50:00   0.0004582273
```

```
InfiltratedInflow 01/01/2000 02:51:00   0.0004582273
InfiltratedInflow 01/01/2000 02:52:00   0.0004582273
InfiltratedInflow 01/01/2000 02:53:00   0.0004582273
InfiltratedInflow 01/01/2000 02:54:00   0.0004582273
InfiltratedInflow 01/01/2000 02:55:00   0.0004582273
InfiltratedInflow 01/01/2000 02:56:00   0.0004582273
InfiltratedInflow 01/01/2000 02:57:00   0.0004582273
InfiltratedInflow 01/01/2000 02:58:00   0.0004582273
InfiltratedInflow 01/01/2000 02:59:00   0.0004582273
InfiltratedInflow 01/01/2000 03:00:00   0.0004582273

[REPORT]
;;Reporting Options
INPUT      YES
CONTROLS   NO
SUBCATCHMENTS ALL
NODES ALL
LINKS ALL

[TAGS]
Node       St_UnGrd         Underground_Storage

[MAP]
DIMENSIONS        381503.2836      5032790.42705    381639.0324      5032880.16395
UNITS             Meters

[COORDINATES]
;;Node           X-Coord            Y-Coord
;;-------------- ------------------ ------------------
MH505             381512.619         5032853.746
OF2               381610.244         5032876.085
OF3               381513.952         5032857.477
OF4               381509.454         5032832.912
CB120             381549.093         5032844.875
CB121             381584.314         5032823.865
CB122             381627.208         5032806.966
CB123             381622.312         5032818.188
CB124             381612.986         5032839.563
CB125             381519.372         5032825.114
Roof1             381594.1           5032833.494
Roof2             381526.761         5032828.396
St_UnGrd          381520.468         5032851.542

[VERTICES]
;;Link           X-Coord            Y-Coord
;;-------------- ------------------ ------------------
BLDG_F            381587.375         5032838.9
CB121             381580.382         5032829.221
CB121             381526.869         5032841.1
CB123             381583.496         5032831.297
CB123             381530.098         5032843.407

[POLYGONS]
;;Subcatchment   X-Coord            Y-Coord
;;-------------- ------------------ ------------------
S1                381585.63          5032868.962
S1                381545.732         5032851.464
S1                381549.853         5032863.759
S1                381561.389         5032872.018
S1                381568.12          5032873.68
S1                381571.213         5032866.739
S1                381575.491         5032868.703
S1                381584.113         5032872.421
S1                381585.63          5032868.962
S10               381577.07          5032828.633
S10               381573.49          5032810.992
S10               381521.312         5032821.582
S10               381524.892         5032839.223
S10               381534.873         5032837.198
S10               381534.419         5032834.958
S10               381536.967         5032834.441
S10               381537.422         5032836.68
S10               381577.07          5032828.633
S2                381600.237         5032851.815
S2                381608.78          5032855.542
S2                381620.836         5032828.001
S2                381614.354         5032825.173
S2                381603.372         5032850.345
S2                381601.278         5032849.431
S2                381600.237         5032851.815
S3                381600.122         5032875.319
S3                381600.122         5032875.319
S3                381608.78          5032855.542
S3                381602.332         5032852.729
S3                381598.259         5032862.063
S3                381597.544         5032861.752
S3                381593.609         5032870.772
S3                381567.855         5032859.534
S3                381567.277         5032860.913
S3                381600.122         5032875.319
S4                381524.892         5032839.223
S4                381521.312         5032821.582
S4                381563.78          5032812.963
S4                381562.788         5032808.079
S4                381521.032         5032816.77
S4                381516.421         5032820.775
S4                381519.182         5032849.734
S4                381520.586         5032849.638
S4                381524.866         5032848.769
S4                381525.228         5032848.183
S4                381524.284         5032843.53
S4                381525.411         5032841.771
S4                381524.892         5032839.223
S5                381545.732         5032851.464
S5                381567.277         5032860.913
S5                381567.855         5032859.534
S5                381567.897         5032859.438
S5                381567.158         5032859.115
S5                381566.874         5032858.986
S5                381566.594         5032858.846
S5                381566.319         5032858.697
S5                381566.05          5032858.539
S5                381565.786         5032858.372
S5                381565.528         5032858.196
S5                381565.276         5032858.012
S5                381565.03          5032857.819
S5                381564.792         5032857.617
S5                381564.56          5032857.408
S5                381564.335         5032857.191
S5                381564.118         5032856.966
S5                381563.908         5032856.735
S5                381563.707         5032856.496
S5                381563.514         5032856.25
S5                381563.329         5032855.999
S5                381563.153         5032855.741
S5                381562.986         5032855.477
S5                381562.827         5032855.207
S5                381562.681         5032854.937
S5                381562.543         5032854.662
S5                381562.415         5032854.382
S5                381562.296         5032854.099
S5                381562.186         5032853.811
S5                381562.087         5032853.52
S5                381561.997         5032853.226
S5                381561.917         5032852.929
S5                381561.846         5032852.63
S5                381561.812         5032852.481
S5                381561.773         5032852.334
S5                381561.729         5032852.188
S5                381561.68          5032852.043
S5                381561.627         5032851.9
S5                381561.569         5032851.759
S5                381561.507         5032851.62
S5                381561.441         5032851.483
S5                381561.615         5032851.396
S5                381568.16          5032850.064
S5                381572.167         5032851.809
S5                381574.562         5032846.312
S5                381570.746         5032844.646
S5                381570.904         5032844.497
S5                381568.214         5032843.324
S5                381568.127         5032843.284
S5                381568.041         5032843.241
S5                381567.957         5032843.195
S5                381567.874         5032843.147
S5                381567.793         5032843.096
S5                381567.714         5032843.041
S5                381567.637         5032842.985
S5                381567.561         5032842.925
S5                381567.488         5032842.863
S5                381567.417         5032842.799
S5                381567.348         5032842.732
S5                381567.282         5032842.663
S5                381567.218         5032842.591
S5                381567.156         5032842.518
S5                381567.097         5032842.442
S5                381567.041         5032842.365
S5                381566.987         5032842.285
S5                381566.936         5032842.204
S5                381566.888         5032842.121
S5                381566.843         5032842.036
S5                381566.8           5032841.95
S5                381566.761         5032841.863
S5                381566.725         5032841.774
S5                381566.692         5032841.684
S5                381566.661         5032841.593
S5                381566.634         5032841.501
S5                381566.611         5032841.408
S5                381566.59          5032841.314
S5                381565.348         5032835.196
S5                381564.854         5032833.766
S5                381564.337         5032831.218
S5                381546.649         5032834.808
S5                381537.422         5032836.68
S5                381536.967         5032834.441
S5                381534.419         5032834.958
S5                381534.873         5032837.198
S5                381524.892         5032839.223
S5                381525.411         5032841.771
S5                381524.284         5032843.53
S5                381525.228         5032848.183
S5                381524.866         5032848.769
S5                381520.586         5032849.638
S5                381519.182         5032849.734
S5                381519.868         5032856.933
S5                381545.732         5032851.464
S6                381574.562         5032846.312
S6                381574.562         5032846.312
S6                381572.167         5032851.809
S6                381581.761         5032854.864
S6                381590.946         5032833.812
S6                381603.052         5032806.066
S6                381601.782         5032799.963
S6                381562.788         5032808.079
S6                381563.78          5032812.963
S6                381573.49          5032810.992
S6                381577.07          5032828.633
S6                381564.337         5032831.218
S6                381564.854         5032833.766
S6                381565.348         5032835.196
S6                381566.59          5032841.314
S6                381566.611         5032841.408
S6                381566.635         5032841.501
S6                381566.662         5032841.593
S6                381566.692         5032841.684
S6                381566.725         5032841.774
S6                381566.761         5032841.862
S6                381566.801         5032841.95
S6                381566.843         5032842.036
S6                381566.888         5032842.121
S6                381566.937         5032842.203
S6                381566.988         5032842.285
S6                381567.041         5032842.364
S6                381567.098         5032842.442
S6                381567.157         5032842.517
S6                381567.218         5032842.591
S6                381567.282         5032842.662
S6                381567.349         5032842.732
S6                381567.417         5032842.798
S6                381567.488         5032842.863
S6                381567.562         5032842.925
S6                381567.637         5032842.984
S6                381567.714         5032843.041
S6                381567.793         5032843.095
S6                381567.874         5032843.147
S6                381567.957         5032843.195
S6                381568.041         5032843.241
S6                381568.127         5032843.284
S6                381568.214         5032843.324
S6                381570.904         5032844.497
S6                381570.746         5032844.646
S6                381574.562         5032846.312
S7                381627.999         5032794.506
S7                381601.782         5032799.963
S7                381603.052         5032806.066
S7                381619.55          5032813.264
S7                381614.354         5032825.173
S7                381620.836         5032828.001
S7                381632.862         5032800.531
S7                381627.999         5032794.506
S8                381597.544         5032861.751
S8                381581.761         5032854.863
S8                381572.167         5032851.809
S8                381568.16          5032850.064
S8                381561.615         5032851.396
S8                381561.441         5032851.483
S8                381561.507         5032851.62
S8                381561.569         5032851.759
S8                381561.627         5032851.9
S8                381561.68          5032852.043
S8                381561.729         5032852.188
S8                381561.773         5032852.334
S8                381561.812         5032852.481
S8                381561.846         5032852.63
S8                381561.917         5032852.929
S8                381561.997         5032853.226
S8                381562.087         5032853.52
S8                381562.186         5032853.811
S8                381562.296         5032854.099
S8                381562.415         5032854.382
S8                381562.543         5032854.662
S8                381562.681         5032854.937
S8                381562.827         5032855.207
S8                381562.986         5032855.477
S8                381563.153         5032855.741
S8                381563.329         5032855.999
S8                381563.514         5032856.25
S8                381563.707         5032856.496
S8                381563.908         5032856.735
S8                381564.118         5032856.966
S8                381564.335         5032857.191
S8                381564.56          5032857.408
S8                381564.792         5032857.617
S8                381565.03          5032857.819
S8                381565.276         5032858.012
S8                381565.528         5032858.196
S8                381565.786         5032858.372
S8                381566.05          5032858.539
S8                381566.319         5032858.697
S8                381566.594         5032858.846
S8                381566.874         5032858.986
S8                381567.158         5032859.115
S8                381567.897         5032859.438
S8                381567.855         5032859.534
S8                381593.609         5032870.772
S8                381597.544         5032861.751
S9                381581.761         5032854.865
S9                381598.259         5032862.063
```

```
S9              381602.332         5032852.729
S9              381600.237         5032851.815
S9              381601.278         5032849.431
S9              381603.372         5032850.345
S9              381619.55          5032813.264
S9              381603.052         5032806.066
S9              381581.761         5032854.865

;;Storage Node   X-Coord            Y-Coord
;;-------------- ------------------ ------------------

[SYMBOLS]
;;Gage           X-Coord            Y-Coord
;;-------------- ------------------ ------------------
```

```
EPA STORM WATER MANAGEMENT MODEL - VERSION 5.2 (Build 5.2.4)
------------------------------------------------------------


*************
Element Count
*************
Number of rain gages ...... 2
Number of subcatchments ... 10
Number of nodes ........... 13
Number of links ........... 9
Number of pollutants ...... 0
Number of land uses ....... 0


****************
Raingage Summary
****************
                                                  Data       Recording
Name                 Data Source                  Type       Interval
--------------------------------------------------------------------
3CHI002              3CHI002                      INTENSITY   10 min.
3CHI100              3CHI100                      INTENSITY   10 min.


********************
Subcatchment Summary
********************
Name                        Area     Width   %Imperv    %Slope Rain Gage            Outlet
-----------------------------------------------------------------------------------------------
---------------
S1                          0.03     38.60     14.29    1.5000 3CHI002              CB120
S10                         0.10     18.00    100.00    1.0000 3CHI002              Roof2
S2                          0.02     38.94     11.12    2.1000 3CHI002              CB124
S3                          0.02     26.02      0.00    2.0000 3CHI002              OF2
S4                          0.04    163.64      3.09    1.5000 3CHI002              CB125
S5                          0.09     79.85     77.46    2.0000 3CHI002              CB120
S6                          0.11    105.72     17.82    2.1000 3CHI002              CB121
S7                          0.05     44.22     13.68    3.3000 3CHI002              CB122
S8                          0.03     11.98     95.75    5.2000 3CHI002              St_UnGrd
S9                          0.10     18.00    100.00    1.0000 3CHI002              Roof1


************
Node Summary
************
                                            Invert      Max.    Ponded    External
Name                 Type                    Elev.     Depth      Area    Inflow
-----------------------------------------------------------------------------------
MH505                OUTFALL                 78.00      0.00       0.0
OF2                  OUTFALL                  0.00      0.00       0.0
OF3                  OUTFALL                 78.88      0.00       0.0
OF4                  OUTFALL                 78.88      0.00       0.0
CB120                STORAGE                 82.10      0.30       0.0
CB121                STORAGE                 82.28      0.30       0.0
CB122                STORAGE                 79.35      1.70       0.0
CB123                STORAGE                 79.17      2.18       0.0
CB124                STORAGE                 79.47      1.78       0.0
CB125                STORAGE                 80.20      2.00       0.0
Roof1                STORAGE                 88.85      0.15       0.0
Roof2                STORAGE                 88.85      0.15       0.0
St_UnGrd             STORAGE                 78.00      1.00       0.0    Yes


************
Link Summary
************
Name                 From Node        To Node          Type            Length    %Slope
Roughness
-----------------------------------------------------------------------------------------
-
C1                   CB124            CB123            CONDUIT           23.3    0.9862
0.0130
C2                   CB122            CB123            CONDUIT           12.2    0.9965
0.0130
BLDG_E               Roof2            OF4              OUTLET
BLDG_F               Roof1            OF3              OUTLET
CB120                CB120            St_UnGrd         OUTLET
CB121                CB121            St_UnGrd         OUTLET
CB123                CB123            St_UnGrd         OUTLET
CB125                CB125            St_UnGrd         OUTLET
OL1                  St_UnGrd         MH505            OUTLET


*********************
Cross Section Summary
*********************
                                      Full     Full     Hyd.     Max.   No. of     Full
Conduit              Shape            Depth     Area     Rad.    Width  Barrels     Flow
-----------------------------------------------------------------------------------------
C1                   CIRCULAR          0.25     0.05     0.06     0.25        1     0.06
C2                   CIRCULAR          0.25     0.05     0.06     0.25        1     0.06


****************
Analysis Options
****************
Flow Units ............... CMS
Process Models:
  Rainfall/Runoff ........ YES
  RDII ................... NO
  Snowmelt ............... NO
  Groundwater ............ NO
  Flow Routing ........... YES
  Ponding Allowed ........ NO
  Water Quality .......... NO
Infiltration Method ...... HORTON
Flow Routing Method ...... DYNWAVE
Surcharge Method ......... EXTRAN
Starting Date ............ 01/01/2000 00:00:00
Ending Date .............. 01/01/2000 03:00:00
Antecedent Dry Days ...... 0.0
Report Time Step ......... 00:01:00
Wet Time Step ............ 00:05:00
Dry Time Step ............ 00:05:00
Routing Time Step ........ 5.00 sec
Variable Time Step ....... YES
Maximum Trials ........... 8
Number of Threads ........ 1
Head Tolerance ........... 0.001524 m


**************************        Volume         Depth
Runoff Quantity Continuity     hectare-m            mm
**************************     ---------        -------
Total Precipitation ......         0.019         31.879
Evaporation Loss .........         0.000          0.000
Infiltration Loss ........         0.009         14.658
Surface Runoff ...........         0.010         16.356
Final Storage ............         0.001          1.128
Continuity Error (%) .....        -0.823


**************************        Volume         Volume
Flow Routing Continuity        hectare-m      10^6 ltr
**************************     ---------      ---------
Dry Weather Inflow .......         0.000          0.000
Wet Weather Inflow .......         0.010          0.096
Groundwater Inflow .......         0.000          0.000
RDII Inflow ..............         0.000          0.000
External Inflow ..........         0.002          0.022
External Outflow .........         0.009          0.093
Flooding Loss ............         0.000          0.000
Evaporation Loss .........         0.000          0.000
Exfiltration Loss ........         0.000          0.000
Initial Stored Volume ....         0.000          0.000
Final Stored Volume ......         0.003          0.025
Continuity Error (%) .....         0.000
```

****
Time-Step Critical Elements
****
None

****
Highest Flow Instability Indexes
****
All links are stable.

****
Most Frequent Nonconverging Nodes
****
Convergence obtained at all time steps.

****
Routing Time Step Summary
****

Minimum Time Step	:	4.50 sec
Average Time Step	:	5.00 sec
Maximum Time Step	:	5.00 sec
% of Time in Steady State	:	0.00
Average Iterations per Step	:	2.00
% of Steps Not Converging	:	0.00
Time Step Frequencies	:	
5.000 - 3.155 sec	:	100.00 %
3.155 - 1.991 sec	:	0.00 %
1.991 - 1.256 sec	:	0.00 %
1.256 - 0.792 sec	:	0.00 %
0.792 - 0.500 sec	:	0.00 %

****
Subcatchment Runoff Summary
****

Subcatchment	Total Precip mm	Total Runon mm	Total Evap mm	Total Infil mm	Imperv Runoff mm	Perv Runoff mm	Total Runoff mm	Total Runoff 10^6 ltr	Peak Runoff CMS	Runoff Coeff
S1	31.88	0.00	0.00	29.87	4.34	2.03	2.03	0.00	0.00	0.064
S10	31.88	0.00	0.00	0.00	30.03	0.00	30.03	0.03	0.02	0.942
S2	31.88	0.00	0.00	30.13	3.38	1.95	1.95	0.00	0.00	0.061
S3	31.88	0.00	0.00	31.71	0.00	0.29	0.29	0.00	0.00	0.009
S4	31.88	0.00	0.00	31.17	0.94	1.10	1.10	0.00	0.00	0.034
S5	31.88	0.00	0.00	7.10	23.48	0.16	23.64	0.02	0.02	0.742
S6	31.88	0.00	0.00	26.07	5.41	0.22	5.63	0.01	0.01	0.177
S7	31.88	0.00	0.00	29.90	4.15	2.03	2.03	0.00	0.00	0.064
S8	31.88	0.00	0.00	2.02	29.00	28.00	28.00	0.01	0.01	0.878
S9	31.88	0.00	0.00	0.00	30.03	0.00	30.03	0.03	0.02	0.942

****
Node Depth Summary
****

Node	Type	Average Depth Meters	Maximum Depth Meters	Maximum HGL Meters	Time of Max Occurrence days	hr:min	Reported Max Depth Meters
MH505	OUTFALL	0.00	0.00	78.00	0	00:00	0.00
OF2	OUTFALL	0.00	0.00	0.00	0	00:00	0.00
OF3	OUTFALL	0.00	0.00	78.88	0	00:00	0.00
OF4	OUTFALL	0.00	0.00	78.88	0	00:00	0.00
CB120	STORAGE	0.00	0.03	82.13	0	01:10	0.03
CB121	STORAGE	0.00	0.01	82.29	0	01:10	0.01
CB122	STORAGE	0.00	0.03	79.38	0	01:10	0.03
CB123	STORAGE	0.01	0.13	79.30	0	01:15	0.13
CB124	STORAGE	0.00	0.02	79.49	0	01:10	0.02
CB125	STORAGE	0.00	0.07	80.27	0	01:11	0.07
Roof1	STORAGE	0.01	0.03	88.88	0	01:44	0.03
Roof2	STORAGE	0.01	0.03	88.88	0	01:44	0.03
St_UnGrd	STORAGE	0.00	0.01	78.01	0	01:10	0.01

****
Node Inflow Summary
****

Node	Type	Maximum Lateral Inflow CMS	Maximum Total Inflow CMS	Time of Max Occurrence days	hr:min	Lateral Inflow Volume 10^6 ltr	Total Inflow Volume 10^6 ltr	Flow Balance Error Percent
MH505	OUTFALL	0.000	0.035	0	01:10	0	0.0606	0.000
OF2	OUTFALL	0.000	0.000	0	01:10	5.85e-05	5.85e-05	0.000
OF3	OUTFALL	0.000	0.002	0	00:54	0	0.016	0.000
OF4	OUTFALL	0.000	0.002	0	00:54	0	0.016	0.000
CB120	STORAGE	0.016	0.016	0	01:10	0.0214	0.0214	-0.001
CB121	STORAGE	0.005	0.005	0	01:10	0.00636	0.00636	0.001
CB122	STORAGE	0.001	0.001	0	01:10	0.001	0.001	0.603
CB123	STORAGE	0.000	0.002	0	01:10	0	0.00141	-0.700
CB124	STORAGE	0.001	0.001	0	01:10	0.000424	0.000424	2.318
CB125	STORAGE	0.001	0.001	0	01:10	0.000426	0.000426	0.005
Roof1	STORAGE	0.020	0.020	0	01:10	0.0285	0.0285	0.000
Roof2	STORAGE	0.020	0.020	0	01:10	0.0285	0.0285	0.000
St_UnGrd	STORAGE	0.013	0.035	0	01:10	0.0309	0.0606	-0.000

****
Node Surcharge Summary
****

No nodes were surcharged.

****
Node Flooding Summary
****

No nodes were flooded.

****
Storage Volume Summary
****

Storage Unit	Average Volume 1000 m³	Avg Pcnt Full	Evap Pcnt Loss	Exfil Pcnt Loss	Maximum Volume 1000 m³	Max Pcnt Full	Time of Max Occurrence days	hr:min	Maximum Outflow CMS
CB120	0.000	0.1	0.0	0.0	0.000	0.9	0	01:10	0.016
CB121	0.000	0.0	0.0	0.0	0.000	0.2	0	01:10	0.005
CB122	0.000	0.0	0.0	0.0	0.000	0.0	0	01:10	0.001
CB123	0.000	0.5	0.0	0.0	0.000	5.9	0	01:15	0.001
CB124	0.000	0.0	0.0	0.0	0.000	0.0	0	01:10	0.001
CB125	0.000	0.0	0.0	0.0	0.000	0.3	0	01:11	0.001
Roof1	0.009	10.0	0.0	0.0	0.017	17.5	0	01:44	0.002
Roof2	0.010	10.0	0.0	0.0	0.017	17.5	0	01:44	0.002
St_UnGrd	0.000	0.1	0.0	0.0	0.000	0.9	0	01:10	0.035

****
Outfall Loading Summary
****

Outfall Node	Flow Freq Pcnt	Avg Flow CMS	Max Flow CMS	Total Volume 10^6 ltr
MH505	99.35	0.006	0.035	0.061
OF2	5.00	0.000	0.000	0.000
OF3	81.21	0.002	0.002	0.016
OF4	81.21	0.002	0.002	0.016
System	66.69	0.009	0.040	0.093

****
Link Flow Summary
****

Link	Type	Maximum |Flow| CMS	Time of Max Occurrence days	hr:min	Maximum |Veloc| m/sec	Max/ Full Flow	Max/ Full Depth
C1	CONDUIT	0.001	0	01:10	0.38	0.01	0.14
C2	CONDUIT	0.001	0	01:10	0.47	0.02	0.18
BLDG_E	DUMMY	0.002	0	00:54			
BLDG_F	DUMMY	0.002	0	00:54			
CB120	DUMMY	0.016	0	01:10			
CB121	DUMMY	0.005	0	01:10			
CB123	DUMMY	0.001	0	01:15			
CB125	DUMMY	0.001	0	01:11			
OL1	DUMMY	0.035	0	01:10			

****
Flow Classification Summary
****

Conduit	Adjusted /Actual Length	Dry	Up Dry	Down Dry	Sub Crit	Sup Crit	Up Crit	Down Crit	Norm Ltd	Inlet Ctrl
		Fraction of Time in Flow Class								
C1	1.00	0.36	0.00	0.00	0.07	0.00	0.00	0.56	0.07	0.00
C2	1.00	0.36	0.00	0.00	0.07	0.00	0.00	0.56	0.08	0.00

****
Conduit Surcharge Summary
****

No conduits were surcharged.

Analysis begun on: Thu Sep 26 08:34:01 2024
Analysis ended on: Thu Sep 26 08:34:01 2024
Total elapsed time: < 1 sec

Post-Development 3-hour Chicago 1:100 year Event

```
  [TITLE]
;;Project Title/Notes

[OPTIONS]
;;Option             Value
FLOW_UNITS           CMS
INFILTRATION         HORTON
FLOW_ROUTING         DYNWAVE
LINK_OFFSETS         ELEVATION
MIN_SLOPE            0
ALLOW_PONDING        NO
SKIP_STEADY_STATE    NO

START_DATE           01/01/2000
START_TIME           00:00:00
REPORT_START_DATE    01/01/2000
REPORT_START_TIME    00:00:00
END_DATE             01/01/2000
END_TIME             03:00:00
SWEEP_START          01/01
SWEEP_END            12/31
DRY_DAYS             0
REPORT_STEP          00:00:05
WET_STEP             00:02:00
DRY_STEP             00:02:00
ROUTING_STEP         5
RULE_STEP            00:00:00

INERTIAL_DAMPING     PARTIAL
NORMAL_FLOW_LIMITED  BOTH
FORCE_MAIN_EQUATION  H-W
VARIABLE_STEP        0.75
LENGTHENING_STEP     0
MIN_SURFAREA         0
MAX_TRIALS           8
HEAD_TOLERANCE       0.0015
SYS_FLOW_TOL         5
LAT_FLOW_TOL         5
MINIMUM_STEP         0.5
THREADS              12

[EVAPORATION]
;;Data Source    Parameters
;;-------------- ----------------
CONSTANT         0.0
DRY_ONLY         NO

[RAINGAGES]
;;Name           Format    Interval SCF      Source
;;-------------- --------- -------- -------- ----------
3CHI100          INTENSITY 0:10     1.0      TIMESERIES 3CHI100

[SUBCATCHMENTS]
;;Name           Rain Gage        Outlet           Area     %Imperv  Width    %Slope   CurbLen
SnowPack
;;-------------- ---------------- ---------------- -------- -------- -------- -------- -------
- ----------------
S1               3CHI100          CB120            0.0331   14.286   38.601   1.5      0
S10              3CHI100          Roof2            0.0953   100      18       1        0
S2               3CHI100          CB124            0.0218   11.125   38.94    2.1      0
S3               3CHI100          OF2              0.0203   0        26.019   2        0
S4               3CHI100          CB125            0.0388   3.093    163.644  1.5      0
S5               3CHI100          CB120            0.0881   77.464   79.845   2        0
S6               3CHI100          CB121            0.1134   17.819   105.724  2.1      0
S7               3CHI100          CB122            0.0492   13.679   44.221   3.3      0
S8               3CHI100          St_UnGrd         0.0327   95.747   11.978   5.2      0
S9               3CHI100          Roof1            0.0952   100      18       1        0

[SUBAREAS]
;;Subcatchment   N-Imperv   N-Perv     S-Imperv   S-Perv     PctZero    RouteTo    PctRouted
;;-------------- ---------- ---------- ---------- ---------- ---------- ---------- ----------
S1               0.013      0.25       1.57       4.67       0          PERVIOUS   100
S10              0.013      0.25       1.57       4.67       0          OUTLET
S2               0.013      0.25       1.57       4.67       0          PERVIOUS   100
S3               0.013      0.25       1.57       4.67       0          PERVIOUS   100
S4               0.013      0.25       1.57       4.67       0          PERVIOUS   100
S5               0.013      0.25       1.57       4.67       0          OUTLET
S6               0.013      0.25       1.57       4.67       0          OUTLET
S7               0.013      0.25       1.57       4.67       0          PERVIOUS   100
S8               0.013      0.25       1.57       4.67       0          PERVIOUS   100
S9               0.013      0.25       1.57       4.67       0          OUTLET

[INFILTRATION]
;;Subcatchment   Param1     Param2     Param3     Param4     Param5
;;-------------- ---------- ---------- ---------- ---------- ----------
S1               76.2       13.2       4.14       7          0
S10              76.2       13.2       4.14       7          0
S2               76.2       13.2       4.14       7          0
S3               76.2       13.2       4.14       7          0
S4               76.2       13.2       4.14       7          0
S5               76.2       13.2       4.14       7          0
S6               76.2       13.2       4.14       7          0
S7               76.2       13.2       4.14       7          0
S8               76.2       13.2       4.14       7          0
S9               76.2       13.2       4.14       7          0

[OUTFALLS]
;;Name           Elevation  Type       Stage Data       Gated    Route To
;;-------------- ---------- ---------- ---------------- -------- ----------------
MH505            78         NORMAL                      NO
OF2              0          FREE                        NO
OF3              78.88      NORMAL                      NO
OF4              78.88      NORMAL                      NO

[STORAGE]
;;Name           Elev.    MaxDepth   InitDepth  Shape       Curve Name/Params
SurDepth Fevap    Psi      Ksat     IMD
;;-------------- -------- --------- ---------- ----------- ---------------------------- -----
-- --------- -------- --------- --------
CB120            82.1     0.3        0          TABULAR     CB120                        0
0
CB121            82.28    0.3        0          TABULAR     CB121                        0
0
CB122            79.35    1.7        0          TABULAR     CB122                        0
0
CB123            79.168   2.182      0          TABULAR     CB123                        0
0
CB124            79.47    1.78       0          TABULAR     CB124                        0
0
CB125            80.2     2          0          TABULAR     CB125                        0
0
Roof1            88.85    0.15       0          FUNCTIONAL  0         0         635      0
0
Roof2            88.85    0.15       0          FUNCTIONAL  0         0         635      0
0
St_UnGrd         78       1          0          FUNCTIONAL  0         0         49       0
0

[CONDUITS]
;;Name           From Node        To Node          Length     Roughness  InOffset   OutOffset
InitFlow   MaxFlow
;;-------------- ---------------- ---------------- ---------- ---------- ---------- ----------
---------- ----------
C1               CB124            CB123            23.322     0.013      79.47      79.24
0          0.04
C2               CB122            CB123            12.244     0.013      79.35      79.228
0          0.04

[OUTLETS]
;;Name           From Node        To Node          Offset     Type             QTable/Qcoeff
Qexpon     Gated
;;-------------- ---------------- ---------------- ---------- ---------------- ----------------
- ---------- --------
BLDG_E           Roof2            OF4              88.85      TABULAR/HEAD     O_Roof2
NO
BLDG_F           Roof1            OF3              88.85      TABULAR/HEAD     O_Roof1
NO
CB120            CB120            St_UnGrd         82.1       TABULAR/HEAD     ZURN_Z150F-6NH
NO
CB121            CB121            St_UnGrd         82.28      TABULAR/HEAD     ZURN_Z150F-6NH
NO
CB123            CB123            St_UnGrd         79.168     TABULAR/HEAD     Vortex_ICD_70
NO
CB125            CB125            St_UnGrd         80.2       TABULAR/HEAD     Vortex_ICD_70
NO
OL1              St_UnGrd         MH505            78         TABULAR/HEAD     O_St_UnGrd
NO

[XSECTIONS]
;;Link           Shape        Geom1            Geom2      Geom3      Geom4      Barrels
Culvert
;;-------------- ------------ ---------------- ---------- ---------- ---------- ---------- ---
-------
C1               CIRCULAR     0.25             0          0          0          1
C2               CIRCULAR     0.25             0          0          0          1

[LOSSES]
;;Link           Kentry     Kexit      Kavg       Flap Gate  Seepage
;;-------------- ---------- ---------- ---------- ---------- ----------

[INFLOWS]
;;Node           Constituent      Time Series      Type     Mfactor  Sfactor  Baseline Pattern
;;-------------- ---------------- ---------------- -------- -------- -------- -------- -------
-
St_UnGrd         FLOW             InfiltratedInflow FLOW     1.0      1        0

[CURVES]
;;Name           Type       X-Value    Y-Value
;;-------------- ---------- ---------- ----------
;CBMH Inlet Capture Curve based on the OSDG Appendix 7-A
CBMH             Rating     0          0
CBMH                        0.122      0.06
CBMH                        0.183      0.073
CBMH                        0.2        0.076
CBMH                        0.243      0.084
CBMH                        0.305      0.094

DI_GRATE_A_OPSD403.01 Rating     0.02       0.00762
DI_GRATE_A_OPSD403.01            0.04       0.01524
DI_GRATE_A_OPSD403.01            0.08       0.0381
DI_GRATE_A_OPSD403.01            0.12       0.06858
DI_GRATE_A_OPSD403.01            0.2        0.1524
DI_GRATE_A_OPSD403.01            0.26       0.23622
DI_GRATE_A_OPSD403.01            0.36       0.4572
DI_GRATE_A_OPSD403.01            0.46       0.6858

DI_GRATE_C_OPSD403.01 Rating     0.02       0.01465
DI_GRATE_C_OPSD403.01            0.04       0.0293
DI_GRATE_C_OPSD403.01            0.08       0.07325
DI_GRATE_C_OPSD403.01            0.12       0.13185
DI_GRATE_C_OPSD403.01            0.2        0.293
DI_GRATE_C_OPSD403.01            0.26       0.45415
DI_GRATE_C_OPSD403.01            0.36       0.879
DI_GRATE_C_OPSD403.01            0.46       1.3185

Les Produits MURPHCO Ltée Rating     0          0
Les Produits MURPHCO Ltée            0.0127     4E-05
Les Produits MURPHCO Ltée            0.0254     0.00019
Les Produits MURPHCO Ltée            0.0381     0.00032
Les Produits MURPHCO Ltée            0.0508     0.00051
Les Produits MURPHCO Ltée            0.0635     0.00064
Les Produits MURPHCO Ltée            0.0762     0.00083
Les Produits MURPHCO Ltée            0.0889     0.00093
Les Produits MURPHCO Ltée            0.1016     0.00101
Les Produits MURPHCO Ltée            0.1143     0.00111
Les Produits MURPHCO Ltée            0.127      0.0012
Les Produits MURPHCO Ltée            0.1397     0.00128
Les Produits MURPHCO Ltée            0.1524     0.00135

;Reversed Flow from rear yard manhole_Lid to the Street
Manhole_Lid      Rating     0          0
Manhole_Lid                 0.11       0
Manhole_Lid                 0.2        0.187
Manhole_Lid                 0.3        0.395
Manhole_Lid                 0.4        0.602
Manhole_Lid                 0.5        0.81
Manhole_Lid                 0.6        1.018
Manhole_Lid                 0.7        1.225
Manhole_Lid                 0.8        1.433
Manhole_Lid                 0.9        1.641
Manhole_Lid                 1          1.848

;Tempest Rating Curve for MHF IPEX TYPE A, No grate allowance
MHF_IPEX_TYPE_A  Rating     0          0
MHF_IPEX_TYPE_A             0.1        0.0057
MHF_IPEX_TYPE_A             0.2        0.0081
MHF_IPEX_TYPE_A             0.3        0.0099
MHF_IPEX_TYPE_A             0.4        0.0114
MHF_IPEX_TYPE_A             0.5        0.0128
MHF_IPEX_TYPE_A             0.6        0.014
MHF_IPEX_TYPE_A             0.7        0.0151
MHF_IPEX_TYPE_A             0.8        0.0162
MHF_IPEX_TYPE_A             0.9        0.0172
MHF_IPEX_TYPE_A             1          0.0181
MHF_IPEX_TYPE_A             1.2        0.0198
MHF_IPEX_TYPE_A             1.4        0.0214
MHF_IPEX_TYPE_A             1.6        0.0229
MHF_IPEX_TYPE_A             1.8        0.0243
MHF_IPEX_TYPE_A             2          0.0256
MHF_IPEX_TYPE_A             2.5        0.0286
MHF_IPEX_TYPE_A             3          0.0313

;Tempest Rating Curve for MHF IPEX TYPE B, No grate allowance
MHF_IPEX_TYPE_B  Rating     0          0
MHF_IPEX_TYPE_B             0.1        0.0081
MHF_IPEX_TYPE_B             0.2        0.0115
MHF_IPEX_TYPE_B             0.3        0.0141
MHF_IPEX_TYPE_B             0.4        0.0162
MHF_IPEX_TYPE_B             0.5        0.0182
MHF_IPEX_TYPE_B             0.6        0.0199
MHF_IPEX_TYPE_B             0.7        0.0215
MHF_IPEX_TYPE_B             0.8        0.023
MHF_IPEX_TYPE_B             0.9        0.0244
MHF_IPEX_TYPE_B             1          0.0257
MHF_IPEX_TYPE_B             1.2        0.0281
MHF_IPEX_TYPE_B             1.4        0.0304
MHF_IPEX_TYPE_B             1.6        0.0325
MHF_IPEX_TYPE_B             1.8        0.0344
MHF_IPEX_TYPE_B             2          0.0363
MHF_IPEX_TYPE_B             2.5        0.0406
MHF_IPEX_TYPE_B             3          0.0445

;Tempest Rating Curve for MHF IPEX TYPE C, No grate allowance
MHF_IPEX_TYPE_C  Rating     0          0
MHF_IPEX_TYPE_C             0.1        0.0106
MHF_IPEX_TYPE_C             0.2        0.015
MHF_IPEX_TYPE_C             0.3        0.0183
MHF_IPEX_TYPE_C             0.4        0.0212
MHF_IPEX_TYPE_C             0.5        0.0237
MHF_IPEX_TYPE_C             0.6        0.0259
```

```
MHF_IPEX_TYPE_C             0.7        0.028
MHF_IPEX_TYPE_C             0.8        0.0299
MHF_IPEX_TYPE_C             0.9        0.0317
MHF_IPEX_TYPE_C             1          0.0335
MHF_IPEX_TYPE_C             1.2        0.0366
MHF_IPEX_TYPE_C             1.4        0.0396
MHF_IPEX_TYPE_C             1.6        0.0423
MHF_IPEX_TYPE_C             1.8        0.0449
MHF_IPEX_TYPE_C             2          0.0473
MHF_IPEX_TYPE_C             2.5        0.0529
MHF_IPEX_TYPE_C             3          0.0579

;Tempest Rating Curve for MHF IPEX TYPE D, No grate allowance
MHF_IPEX_TYPE_D  Rating     0          0
MHF_IPEX_TYPE_D             0.1        0.0154
MHF_IPEX_TYPE_D             0.2        0.0217
MHF_IPEX_TYPE_D             0.3        0.0266
MHF_IPEX_TYPE_D             0.4        0.0307
MHF_IPEX_TYPE_D             0.5        0.0343
MHF_IPEX_TYPE_D             0.6        0.0376
MHF_IPEX_TYPE_D             0.7        0.0406
MHF_IPEX_TYPE_D             0.8        0.0434
MHF_IPEX_TYPE_D             0.9        0.0461
MHF_IPEX_TYPE_D             1          0.0485
MHF_IPEX_TYPE_D             1.2        0.0532
MHF_IPEX_TYPE_D             1.4        0.0574
MHF_IPEX_TYPE_D             1.6        0.0614
MHF_IPEX_TYPE_D             1.8        0.0651
MHF_IPEX_TYPE_D             2          0.0687
MHF_IPEX_TYPE_D             2.5        0.0768
MHF_IPEX_TYPE_D             3          0.0841

;Tempest Rating Curve for MHF IPEX TYPE E, No grate allowance
MHF_IPEX_TYPE_E  Rating     0          0
MHF_IPEX_TYPE_E             0.1        0.0205
MHF_IPEX_TYPE_E             0.2        0.0289
MHF_IPEX_TYPE_E             0.3        0.0355
MHF_IPEX_TYPE_E             0.4        0.0409
MHF_IPEX_TYPE_E             0.5        0.0458
MHF_IPEX_TYPE_E             0.6        0.0501
MHF_IPEX_TYPE_E             0.7        0.0542
MHF_IPEX_TYPE_E             0.8        0.0579
MHF_IPEX_TYPE_E             0.9        0.0614
MHF_IPEX_TYPE_E             1          0.0647
MHF_IPEX_TYPE_E             1.2        0.0709
MHF_IPEX_TYPE_E             1.4        0.0766
MHF_IPEX_TYPE_E             1.6        0.0819
MHF_IPEX_TYPE_E             1.8        0.0868
MHF_IPEX_TYPE_E             2          0.0915
MHF_IPEX_TYPE_E             2.5        0.1023
MHF_IPEX_TYPE_E             3          0.1121

O_Roof1          Rating     0          0
O_Roof1                     0.001      0.002
O_Roof1                     0.15       0.002

O_Roof2          Rating     0          0
O_Roof2                     0.001      0.002
O_Roof2                     0.15       0.002

O_St_L1          Rating     0          0
O_St_L1                     0.001      0.003
O_St_L1                     0.35       0.003

O_St_L2          Rating     0          0
O_St_L2                     0.001      0.002
O_St_L2                     0.35       0.002

O_St_L3          Rating     0          0
O_St_L3                     0.001      0.0137
O_St_L3                     0.35       0.0137

O_St_UnGrd       Rating     0          0
O_St_UnGrd                  0.01       0.041
O_St_UnGrd                  1          0.041

;Tempest Rating Curve for Vortex ICD 100, No grate allowance
Vortex_ICD_100   Rating     0          0
Vortex_ICD_100              0.1        0.0028
Vortex_ICD_100              0.2        0.004
Vortex_ICD_100              0.3        0.0049
Vortex_ICD_100              0.4        0.0056
Vortex_ICD_100              0.5        0.0063
Vortex_ICD_100              0.6        0.0069
Vortex_ICD_100              0.7        0.0075
Vortex_ICD_100              0.8        0.008
Vortex_ICD_100              0.9        0.0085
Vortex_ICD_100              1          0.0089
Vortex_ICD_100              1.2        0.0098
Vortex_ICD_100              1.4        0.0106
Vortex_ICD_100              1.6        0.0113
Vortex_ICD_100              1.8        0.012
Vortex_ICD_100              2          0.0126
Vortex_ICD_100              2.5        0.0141
Vortex_ICD_100              3          0.0155

;Tempest Rating Curve for Vortex ICD 105, No grate allowance
Vortex_ICD_105   Rating     0          0
Vortex_ICD_105              0.1        0.0031
Vortex_ICD_105              0.2        0.0044
Vortex_ICD_105              0.3        0.0054
Vortex_ICD_105              0.4        0.0062
Vortex_ICD_105              0.5        0.0069
Vortex_ICD_105              0.6        0.0076
Vortex_ICD_105              0.7        0.0082
Vortex_ICD_105              0.8        0.0088
Vortex_ICD_105              0.9        0.0093
Vortex_ICD_105              1          0.0098
Vortex_ICD_105              1.2        0.0107
Vortex_ICD_105              1.4        0.0116
Vortex_ICD_105              1.6        0.0124
Vortex_ICD_105              1.8        0.0131
Vortex_ICD_105              2          0.0139
Vortex_ICD_105              2.5        0.0155
Vortex_ICD_105              3          0.017

;Tempest Rating Curve for Vortex ICD 40, No grate allowance
Vortex_ICD_40    Rating     0          0
Vortex_ICD_40               0.1        0.0004
Vortex_ICD_40               0.2        0.0006
Vortex_ICD_40               0.3        0.0007
Vortex_ICD_40               0.4        0.0009
Vortex_ICD_40               0.5        0.001
Vortex_ICD_40               0.6        0.001
Vortex_ICD_40               0.7        0.0011
Vortex_ICD_40               0.8        0.0012
Vortex_ICD_40               0.9        0.0013
Vortex_ICD_40               1          0.0014
Vortex_ICD_40               1.2        0.0015
Vortex_ICD_40               1.4        0.0016
Vortex_ICD_40               1.6        0.0017
Vortex_ICD_40               1.8        0.0018
Vortex_ICD_40               2          0.0019
Vortex_ICD_40               2.5        0.0022
Vortex_ICD_40               3          0.0024

;Tempest Rating Curve for Vortex ICD 45, No grate allowance
Vortex_ICD_45    Rating     0          0
Vortex_ICD_45               0.1        0.0006
Vortex_ICD_45               0.2        0.0008
Vortex_ICD_45               0.3        0.001
Vortex_ICD_45               0.4        0.0011
Vortex_ICD_45               0.5        0.0013
Vortex_ICD_45               0.6        0.0014
Vortex_ICD_45               0.7        0.0015
Vortex_ICD_45               0.8        0.0016
Vortex_ICD_45               0.9        0.0017
Vortex_ICD_45               1          0.0018
Vortex_ICD_45               1.2        0.002
Vortex_ICD_45               1.4        0.0021
Vortex_ICD_45               1.6        0.0023
Vortex_ICD_45               1.8        0.0024
Vortex_ICD_45               2          0.0026
Vortex_ICD_45               2.5        0.0029
Vortex_ICD_45               3          0.0031

;Tempest Rating Curve for Vortex ICD 50, No grate allowance
Vortex_ICD_50    Rating     0          0
Vortex_ICD_50               0.1        0.0007
Vortex_ICD_50               0.2        0.001
Vortex_ICD_50               0.3        0.0012
Vortex_ICD_50               0.4        0.0014
Vortex_ICD_50               0.5        0.0016
Vortex_ICD_50               0.6        0.0018
Vortex_ICD_50               0.7        0.0019
Vortex_ICD_50               0.8        0.002
Vortex_ICD_50               0.9        0.0021
Vortex_ICD_50               1          0.0023
Vortex_ICD_50               1.2        0.0025
Vortex_ICD_50               1.4        0.0027
Vortex_ICD_50               1.6        0.0029
Vortex_ICD_50               1.8        0.003
Vortex_ICD_50               2          0.0032
Vortex_ICD_50               2.5        0.0036
Vortex_ICD_50               3          0.0039

;Tempest Rating Curve for Vortex ICD 55, No grate allowance
Vortex_ICD_55    Rating     0          0
Vortex_ICD_55               0.1        0.0009
Vortex_ICD_55               0.2        0.0012
Vortex_ICD_55               0.3        0.0015
Vortex_ICD_55               0.4        0.0017
Vortex_ICD_55               0.5        0.0019
Vortex_ICD_55               0.6        0.0021
Vortex_ICD_55               0.7        0.0023
Vortex_ICD_55               0.8        0.0024
Vortex_ICD_55               0.9        0.0026
Vortex_ICD_55               1          0.0027
Vortex_ICD_55               1.2        0.003
Vortex_ICD_55               1.4        0.0032
Vortex_ICD_55               1.6        0.0034
Vortex_ICD_55               1.8        0.0036
Vortex_ICD_55               2          0.0038
Vortex_ICD_55               2.5        0.0043
Vortex_ICD_55               3          0.0047

;Tempest Rating Curve for Vortex ICD 60, No grate allowance
Vortex_ICD_60    Rating     0          0
Vortex_ICD_60               0.1        0.0011
Vortex_ICD_60               0.2        0.0015
Vortex_ICD_60               0.3        0.0018
Vortex_ICD_60               0.4        0.0021
Vortex_ICD_60               0.5        0.0023
Vortex_ICD_60               0.6        0.0025
Vortex_ICD_60               0.7        0.0027
Vortex_ICD_60               0.8        0.0029
Vortex_ICD_60               0.9        0.0031
Vortex_ICD_60               1          0.0032
Vortex_ICD_60               1.2        0.0036
Vortex_ICD_60               1.4        0.0038
Vortex_ICD_60               1.6        0.0041
Vortex_ICD_60               1.8        0.0043
Vortex_ICD_60               2          0.0046
Vortex_ICD_60               2.5        0.0051
Vortex_ICD_60               3          0.0056

;Tempest Rating Curve for Vortex ICD 65, No grate allowance
Vortex_ICD_65    Rating     0          0
Vortex_ICD_65               0.1        0.0012
Vortex_ICD_65               0.2        0.0016
Vortex_ICD_65               0.3        0.002
Vortex_ICD_65               0.4        0.0023
Vortex_ICD_65               0.5        0.0025
Vortex_ICD_65               0.6        0.0028
Vortex_ICD_65               0.7        0.003
Vortex_ICD_65               0.8        0.0032
Vortex_ICD_65               0.9        0.0034
Vortex_ICD_65               1          0.0036
Vortex_ICD_65               1.2        0.004
Vortex_ICD_65               1.4        0.0043
Vortex_ICD_65               1.6        0.0046
Vortex_ICD_65               1.8        0.0049
Vortex_ICD_65               2          0.0051
Vortex_ICD_65               2.5        0.0057
Vortex_ICD_65               3          0.0063

;Tempest Rating Curve for Vortex ICD 70, No grate allowance
Vortex_ICD_70    Rating     0          0
Vortex_ICD_70               0.1        0.0013
Vortex_ICD_70               0.2        0.0019
Vortex_ICD_70               0.3        0.0023
Vortex_ICD_70               0.4        0.0027
Vortex_ICD_70               0.5        0.003
Vortex_ICD_70               0.6        0.0033
Vortex_ICD_70               0.7        0.0036
Vortex_ICD_70               0.8        0.0038
Vortex_ICD_70               0.9        0.0041
Vortex_ICD_70               1          0.0043
Vortex_ICD_70               1.2        0.0047
Vortex_ICD_70               1.4        0.0051
Vortex_ICD_70               1.6        0.0055
Vortex_ICD_70               1.8        0.0058
Vortex_ICD_70               2          0.0061
Vortex_ICD_70               2.5        0.0068
Vortex_ICD_70               3          0.0075

;Tempest Rating Curve for Vortex ICD 75, No grate allowance
Vortex_ICD_75    Rating     0          0
Vortex_ICD_75               0.1        0.0016
Vortex_ICD_75               0.2        0.0022
Vortex_ICD_75               0.3        0.0027
Vortex_ICD_75               0.4        0.0032
Vortex_ICD_75               0.5        0.0035
Vortex_ICD_75               0.6        0.0039
Vortex_ICD_75               0.7        0.0042
Vortex_ICD_75               0.8        0.0045
Vortex_ICD_75               0.9        0.0048
Vortex_ICD_75               1          0.005
Vortex_ICD_75               1.2        0.0055
Vortex_ICD_75               1.4        0.0059
Vortex_ICD_75               1.6        0.0063
Vortex_ICD_75               1.8        0.0067
Vortex_ICD_75               2          0.0071
Vortex_ICD_75               2.5        0.0079
Vortex_ICD_75               3          0.0087

;Tempest Rating Curve for Vortex ICD 80, No grate allowance
Vortex_ICD_80    Rating     0          0
Vortex_ICD_80               0.1        0.0018
Vortex_ICD_80               0.2        0.0026
Vortex_ICD_80               0.3        0.0031
Vortex_ICD_80               0.4        0.0036
Vortex_ICD_80               0.5        0.004
Vortex_ICD_80               0.6        0.0044
Vortex_ICD_80               0.7        0.0048
Vortex_ICD_80               0.8        0.0051
Vortex_ICD_80               0.9        0.0054
Vortex_ICD_80               1          0.0057
Vortex_ICD_80               1.2        0.0063
Vortex_ICD_80               1.4        0.0068
Vortex_ICD_80               1.6        0.0072
Vortex_ICD_80               1.8        0.0077
Vortex_ICD_80               2          0.0081
Vortex_ICD_80               2.5        0.009
Vortex_ICD_80               3          0.0099

;Tempest Rating Curve for Vortex ICD 85, No grate allowance
Vortex_ICD_85    Rating     0          0
```

```
Vortex_ICD_85                0.1        0.002
Vortex_ICD_85                0.2        0.0029
Vortex_ICD_85                0.3        0.0035
Vortex_ICD_85                0.4        0.0041
Vortex_ICD_85                0.5        0.0045
Vortex_ICD_85                0.6        0.005
Vortex_ICD_85                0.7        0.0054
Vortex_ICD_85                0.8        0.0057
Vortex_ICD_85                0.9        0.0061
Vortex_ICD_85                1          0.0064
Vortex_ICD_85                1.2        0.007
Vortex_ICD_85                1.4        0.0076
Vortex_ICD_85                1.6        0.0081
Vortex_ICD_85                1.8        0.0086
Vortex_ICD_85                2          0.0091
Vortex_ICD_85                2.5        0.0101
Vortex_ICD_85                3          0.0111

;Tempest Rating Curve for Vortex ICD 90, No grate allowance
Vortex_ICD_90    Rating      0          0
Vortex_ICD_90                0.1        0.0022
Vortex_ICD_90                0.2        0.0032
Vortex_ICD_90                0.3        0.0039
Vortex_ICD_90                0.4        0.0045
Vortex_ICD_90                0.5        0.0051
Vortex_ICD_90                0.6        0.0055
Vortex_ICD_90                0.7        0.006
Vortex_ICD_90                0.8        0.0064
Vortex_ICD_90                0.9        0.0068
Vortex_ICD_90                1          0.0072
Vortex_ICD_90                1.2        0.0079
Vortex_ICD_90                1.4        0.0085
Vortex_ICD_90                1.6        0.0091
Vortex_ICD_90                1.8        0.0096
Vortex_ICD_90                2          0.0102
Vortex_ICD_90                2.5        0.0114
Vortex_ICD_90                3          0.0125

;Tempest Rating Curve for Vortex ICD 95, No grate allowance
Vortex_ICD_95    Rating      0          0
Vortex_ICD_95                0.1        0.0026
Vortex_ICD_95                0.2        0.0036
Vortex_ICD_95                0.3        0.0044
Vortex_ICD_95                0.4        0.0051
Vortex_ICD_95                0.5        0.0057
Vortex_ICD_95                0.6        0.0062
Vortex_ICD_95                0.7        0.0067
Vortex_ICD_95                0.8        0.0071
Vortex_ICD_95                0.9        0.0076
Vortex_ICD_95                1          0.008
Vortex_ICD_95                1.2        0.0087
Vortex_ICD_95                1.4        0.0094
Vortex_ICD_95                1.6        0.0101
Vortex_ICD_95                1.8        0.0107
Vortex_ICD_95                2          0.0113
Vortex_ICD_95                2.5        0.0126
Vortex_ICD_95                3          0.0138

;From Zurn Manual RD178
ZURN_Z150F-6NH   Rating      0          0
ZURN_Z150F-6NH               0.0127     0.0050383830847786 1
ZURN_Z150F-6NH               0.0257     0.0132420013231177
ZURN_Z150F-6NH               0.0384     0.0234992054543888
ZURN_Z150F-6NH               0.0508     0.0357128365761305
ZURN_Z150F-6NH               0.0765     0.0425019726111045
ZURN_Z150F-6NH               0.1024     0.0433196215564931

CB120            Storage     0          0.36
CB120                        0.3        338.53

CB121            Storage     0          0.36
CB121                        0.3        292.64

CB122            Storage     0          0.073
CB122                        1.45       0.073
CB122                        1.7        74.71

CB123            Storage     0          0.36
CB123                        2.182      0.36

CB124            Storage     0          0.073
CB124                        1.58       0.073
CB124                        1.78       34.68

CB125            Storage     0          0.36
CB125                        1.65       0.36
CB125                        1.95       37.3
CB125                        2          37.3

[TIMESERIES]
;;Name           Date       Time       Value
;;-------------- ---------- ---------- ---------
;Rainfall (mm/hr)
3CHI100          01/01/2000 00:00:00   5.339
3CHI100          01/01/2000 00:10:00   6.376
3CHI100          01/01/2000 00:20:00   7.977
3CHI100          01/01/2000 00:30:00   10.797
3CHI100          01/01/2000 00:40:00   17.136
3CHI100          01/01/2000 00:50:00   45.128
3CHI100          01/01/2000 01:00:00   178.107
3CHI100          01/01/2000 01:10:00   51.056
3CHI100          01/01/2000 01:20:00   26.163
3CHI100          01/01/2000 01:30:00   17.571
3CHI100          01/01/2000 01:40:00   13.277
3CHI100          01/01/2000 01:50:00   10.712
3CHI100          01/01/2000 02:00:00   9.008
3CHI100          01/01/2000 02:10:00   7.793
3CHI100          01/01/2000 02:20:00   6.883
3CHI100          01/01/2000 02:30:00   6.174
3CHI100          01/01/2000 02:40:00   5.607
3CHI100          01/01/2000 02:50:00   5.142
3CHI100          01/01/2000 03:00:00   0

;Sum of Infiltrated flow from above the garage slab calculated from Infiltration graphs for S6
multiplied by the total pervious area above the garage.
InfiltratedInflow 01/01/2000 00:01:00   0.001019365
InfiltratedInflow 01/01/2000 00:02:00   0.001019365
InfiltratedInflow 01/01/2000 00:03:00   0.001019365
InfiltratedInflow 01/01/2000 00:04:00   0.001019365
InfiltratedInflow 01/01/2000 00:05:00   0.001019365
InfiltratedInflow 01/01/2000 00:06:00   0.001019365
InfiltratedInflow 01/01/2000 00:07:00   0.001019365
InfiltratedInflow 01/01/2000 00:08:00   0.001019365
InfiltratedInflow 01/01/2000 00:09:00   0.001019365
InfiltratedInflow 01/01/2000 00:10:00   0.001217357
InfiltratedInflow 01/01/2000 00:11:00   0.001217357
InfiltratedInflow 01/01/2000 00:12:00   0.001217357
InfiltratedInflow 01/01/2000 00:13:00   0.001217357
InfiltratedInflow 01/01/2000 00:14:00   0.001217357
InfiltratedInflow 01/01/2000 00:15:00   0.001217357
InfiltratedInflow 01/01/2000 00:16:00   0.001217357
InfiltratedInflow 01/01/2000 00:17:00   0.001217357
InfiltratedInflow 01/01/2000 00:18:00   0.001217357
InfiltratedInflow 01/01/2000 00:19:00   0.001217357
InfiltratedInflow 01/01/2000 00:20:00   0.001523033
InfiltratedInflow 01/01/2000 00:21:00   0.001523033
InfiltratedInflow 01/01/2000 00:22:00   0.001523033
InfiltratedInflow 01/01/2000 00:23:00   0.001523033
InfiltratedInflow 01/01/2000 00:24:00   0.001523033
InfiltratedInflow 01/01/2000 00:25:00   0.001523033
InfiltratedInflow 01/01/2000 00:26:00   0.001523033
InfiltratedInflow 01/01/2000 00:27:00   0.001523033
InfiltratedInflow 01/01/2000 00:28:00   0.001523033
InfiltratedInflow 01/01/2000 00:29:00   0.001523033
InfiltratedInflow 01/01/2000 00:30:00   0.00206145
InfiltratedInflow 01/01/2000 00:31:00   0.00206145
InfiltratedInflow 01/01/2000 00:32:00   0.00206145
InfiltratedInflow 01/01/2000 00:33:00   0.00206145
InfiltratedInflow 01/01/2000 00:34:00   0.00206145
InfiltratedInflow 01/01/2000 00:35:00   0.00206145
InfiltratedInflow 01/01/2000 00:36:00   0.00206145
InfiltratedInflow 01/01/2000 00:37:00   0.00206145
InfiltratedInflow 01/01/2000 00:38:00   0.00206145
InfiltratedInflow 01/01/2000 00:39:00   0.00206145
InfiltratedInflow 01/01/2000 00:40:00   0.003271743
InfiltratedInflow 01/01/2000 00:41:00   0.003271743
InfiltratedInflow 01/01/2000 00:42:00   0.003271743
InfiltratedInflow 01/01/2000 00:43:00   0.003271743
InfiltratedInflow 01/01/2000 00:44:00   0.003271743
InfiltratedInflow 01/01/2000 00:45:00   0.003271743
InfiltratedInflow 01/01/2000 00:46:00   0.003271743
InfiltratedInflow 01/01/2000 00:47:00   0.003271743
InfiltratedInflow 01/01/2000 00:48:00   0.003271743
InfiltratedInflow 01/01/2000 00:49:00   0.003271743
InfiltratedInflow 01/01/2000 00:50:00   0.008514358
InfiltratedInflow 01/01/2000 00:51:00   0.008514358
InfiltratedInflow 01/01/2000 00:52:00   0.008514358
InfiltratedInflow 01/01/2000 00:53:00   0.008514358
InfiltratedInflow 01/01/2000 00:54:00   0.008514358
InfiltratedInflow 01/01/2000 00:55:00   0.006765399
InfiltratedInflow 01/01/2000 00:56:00   0.006765399
InfiltratedInflow 01/01/2000 00:57:00   0.006765399
InfiltratedInflow 01/01/2000 00:58:00   0.006765399
InfiltratedInflow 01/01/2000 00:59:00   0.006765399
InfiltratedInflow 01/01/2000 01:00:00   0.005526751
InfiltratedInflow 01/01/2000 01:01:00   0.005526751
InfiltratedInflow 01/01/2000 01:02:00   0.005526751
InfiltratedInflow 01/01/2000 01:03:00   0.005526751
InfiltratedInflow 01/01/2000 01:04:00   0.005526751
InfiltratedInflow 01/01/2000 01:05:00   0.004649515
InfiltratedInflow 01/01/2000 01:06:00   0.004649515
InfiltratedInflow 01/01/2000 01:07:00   0.004649515
InfiltratedInflow 01/01/2000 01:08:00   0.004649515
InfiltratedInflow 01/01/2000 01:09:00   0.004649515
InfiltratedInflow 01/01/2000 01:10:00   0.004028239
InfiltratedInflow 01/01/2000 01:11:00   0.004028239
InfiltratedInflow 01/01/2000 01:12:00   0.004028239
InfiltratedInflow 01/01/2000 01:13:00   0.004028239
InfiltratedInflow 01/01/2000 01:14:00   0.004028239
InfiltratedInflow 01/01/2000 01:15:00   0.003588238
InfiltratedInflow 01/01/2000 01:16:00   0.003588238
InfiltratedInflow 01/01/2000 01:17:00   0.003588238
InfiltratedInflow 01/01/2000 01:18:00   0.003588238
InfiltratedInflow 01/01/2000 01:19:00   0.003588238
InfiltratedInflow 01/01/2000 01:20:00   0.003276621
InfiltratedInflow 01/01/2000 01:21:00   0.003276621
InfiltratedInflow 01/01/2000 01:22:00   0.003276621
InfiltratedInflow 01/01/2000 01:23:00   0.003276621
InfiltratedInflow 01/01/2000 01:24:00   0.003276621
InfiltratedInflow 01/01/2000 01:25:00   0.003055928
InfiltratedInflow 01/01/2000 01:26:00   0.003055928
InfiltratedInflow 01/01/2000 01:27:00   0.003055928
InfiltratedInflow 01/01/2000 01:28:00   0.003055928
InfiltratedInflow 01/01/2000 01:29:00   0.003055928
InfiltratedInflow 01/01/2000 01:30:00   0.002899628
InfiltratedInflow 01/01/2000 01:31:00   0.002899628
InfiltratedInflow 01/01/2000 01:32:00   0.002899628
InfiltratedInflow 01/01/2000 01:33:00   0.002899628
InfiltratedInflow 01/01/2000 01:34:00   0.002899628
InfiltratedInflow 01/01/2000 01:35:00   0.002788933
InfiltratedInflow 01/01/2000 01:36:00   0.002788933
InfiltratedInflow 01/01/2000 01:37:00   0.002788933
InfiltratedInflow 01/01/2000 01:38:00   0.002788933
InfiltratedInflow 01/01/2000 01:39:00   0.002788933
InfiltratedInflow 01/01/2000 01:40:00   0.002710537
InfiltratedInflow 01/01/2000 01:41:00   0.002710537
InfiltratedInflow 01/01/2000 01:42:00   0.002710537
InfiltratedInflow 01/01/2000 01:43:00   0.002710537
InfiltratedInflow 01/01/2000 01:44:00   0.002710537
InfiltratedInflow 01/01/2000 01:45:00   0.002655015
InfiltratedInflow 01/01/2000 01:46:00   0.002655015
InfiltratedInflow 01/01/2000 01:47:00   0.002655015
InfiltratedInflow 01/01/2000 01:48:00   0.002655015
InfiltratedInflow 01/01/2000 01:49:00   0.002655015
InfiltratedInflow 01/01/2000 01:50:00   0.002615693
InfiltratedInflow 01/01/2000 01:51:00   0.002615693
InfiltratedInflow 01/01/2000 01:52:00   0.002615693
InfiltratedInflow 01/01/2000 01:53:00   0.002615693
InfiltratedInflow 01/01/2000 01:54:00   0.002615693
InfiltratedInflow 01/01/2000 01:55:00   0.002587845
InfiltratedInflow 01/01/2000 01:56:00   0.002587845
InfiltratedInflow 01/01/2000 01:57:00   0.002587845
InfiltratedInflow 01/01/2000 01:58:00   0.002587845
InfiltratedInflow 01/01/2000 01:59:00   0.002587845
InfiltratedInflow 01/01/2000 02:00:00   0.002568122
InfiltratedInflow 01/01/2000 02:01:00   0.002568122
InfiltratedInflow 01/01/2000 02:02:00   0.002568122
InfiltratedInflow 01/01/2000 02:03:00   0.002568122
InfiltratedInflow 01/01/2000 02:04:00   0.002568122
InfiltratedInflow 01/01/2000 02:05:00   0.002554154
InfiltratedInflow 01/01/2000 02:06:00   0.002554154
InfiltratedInflow 01/01/2000 02:07:00   0.002554154
InfiltratedInflow 01/01/2000 02:08:00   0.002554154
InfiltratedInflow 01/01/2000 02:09:00   0.002554154
InfiltratedInflow 01/01/2000 02:10:00   0.002544262
InfiltratedInflow 01/01/2000 02:11:00   0.002544262
InfiltratedInflow 01/01/2000 02:12:00   0.002544262
InfiltratedInflow 01/01/2000 02:13:00   0.002544262
InfiltratedInflow 01/01/2000 02:14:00   0.002544262
InfiltratedInflow 01/01/2000 02:15:00   0.002537255
InfiltratedInflow 01/01/2000 02:16:00   0.002537255
InfiltratedInflow 01/01/2000 02:17:00   0.002537255
InfiltratedInflow 01/01/2000 02:18:00   0.002537255
InfiltratedInflow 01/01/2000 02:19:00   0.002537255
InfiltratedInflow 01/01/2000 02:20:00   0.002532294
InfiltratedInflow 01/01/2000 02:21:00   0.002532294
InfiltratedInflow 01/01/2000 02:22:00   0.002532294
InfiltratedInflow 01/01/2000 02:23:00   0.002532294
InfiltratedInflow 01/01/2000 02:24:00   0.002532294
InfiltratedInflow 01/01/2000 02:25:00   0.002528779
InfiltratedInflow 01/01/2000 02:26:00   0.002528779
InfiltratedInflow 01/01/2000 02:27:00   0.002528779
InfiltratedInflow 01/01/2000 02:28:00   0.002528779
InfiltratedInflow 01/01/2000 02:29:00   0.002528779
InfiltratedInflow 01/01/2000 02:30:00   0.002526291
InfiltratedInflow 01/01/2000 02:31:00   0.002526291
InfiltratedInflow 01/01/2000 02:32:00   0.002526291
InfiltratedInflow 01/01/2000 02:33:00   0.002526291
InfiltratedInflow 01/01/2000 02:34:00   0.002526291
InfiltratedInflow 01/01/2000 02:35:00   0.002524528
InfiltratedInflow 01/01/2000 02:36:00   0.002524528
InfiltratedInflow 01/01/2000 02:37:00   0.002524528
InfiltratedInflow 01/01/2000 02:38:00   0.002524528
InfiltratedInflow 01/01/2000 02:39:00   0.002524528
InfiltratedInflow 01/01/2000 02:40:00   0.00252328
InfiltratedInflow 01/01/2000 02:41:00   0.00252328
InfiltratedInflow 01/01/2000 02:42:00   0.00252328
InfiltratedInflow 01/01/2000 02:43:00   0.00252328
InfiltratedInflow 01/01/2000 02:44:00   0.00252328
InfiltratedInflow 01/01/2000 02:45:00   0.002522396
InfiltratedInflow 01/01/2000 02:46:00   0.002522396
InfiltratedInflow 01/01/2000 02:47:00   0.002522396
InfiltratedInflow 01/01/2000 02:48:00   0.002522396
InfiltratedInflow 01/01/2000 02:49:00   0.002522396
InfiltratedInflow 01/01/2000 02:50:00   0.00252177
InfiltratedInflow 01/01/2000 02:51:00   0.00252177
InfiltratedInflow 01/01/2000 02:52:00   0.00252177
InfiltratedInflow 01/01/2000 02:53:00   0.00252177
InfiltratedInflow 01/01/2000 02:54:00   0.00252177
InfiltratedInflow 01/01/2000 02:55:00   0.0009938035
InfiltratedInflow 01/01/2000 02:56:00   0.0009938035
InfiltratedInflow 01/01/2000 02:57:00   0.0009938035
InfiltratedInflow 01/01/2000 02:58:00   0.0009938035
InfiltratedInflow 01/01/2000 02:59:00   0.0009938035
InfiltratedInflow 01/01/2000 03:00:00   0.0009938035

[REPORT]
;;Reporting Options
```

```
INPUT      YES
CONTROLS   NO
SUBCATCHMENTS ALL
NODES ALL
LINKS ALL

[TAGS]
Subcatch   S10              Building
Subcatch   S5               Parking_Lot
Subcatch   S8               Ramp
Subcatch   S9               Building
Node       St_UnGrd         Underground_Storage

[MAP]
DIMENSIONS        381503.2836      5032790.42705    381639.0324      5032880.16395
UNITS             Meters

[COORDINATES]
;;Node            X-Coord            Y-Coord
;;--------------- ------------------ ------------------
MH505             381512.619         5032853.746
OF2               381610.244         5032876.085
OF3               381513.952         5032857.477
OF4               381509.454         5032832.912
CB120             381549.093         5032844.875
CB121             381584.314         5032823.865
CB122             381627.208         5032806.966
CB123             381622.312         5032818.188
CB124             381612.986         5032839.563
CB125             381519.372         5032825.114
Roof1             381594.1           5032833.494
Roof2             381526.761         5032828.396
St_UnGrd          381520.468         5032851.542

[VERTICES]
;;Link            X-Coord            Y-Coord
;;--------------- ------------------ ------------------
BLDG_F            381587.375         5032838.9
CB121             381580.382         5032829.221
CB121             381526.869         5032841.1
CB123             381583.496         5032831.297
CB123             381530.098         5032843.407

[POLYGONS]
;;Subcatchment    X-Coord            Y-Coord
;;--------------- ------------------ ------------------
S1                381585.63          5032868.962
S1                381545.732         5032851.464
S1                381549.853         5032863.759
S1                381561.389         5032872.018
S1                381568.12          5032873.68
S1                381571.213         5032866.739
S1                381575.491         5032868.703
S1                381584.113         5032872.421
S1                381585.63          5032868.962
S10               381577.07          5032828.633
S10               381573.49          5032810.992
S10               381521.312         5032821.582
S10               381524.892         5032839.223
S10               381534.873         5032837.198
S10               381534.419         5032834.958
S10               381536.967         5032834.441
S10               381537.422         5032836.68
S10               381577.07          5032828.633
S2                381600.237         5032851.815
S2                381608.78          5032855.542
S2                381620.836         5032828.001
S2                381614.354         5032825.173
S2                381603.372         5032850.345
S2                381601.278         5032849.431
S2                381600.237         5032851.815
S3                381600.122         5032875.319
S3                381600.122         5032875.319
S3                381608.78          5032855.542
S3                381602.332         5032852.729
S3                381598.259         5032862.063
S3                381597.544         5032861.752
S3                381593.609         5032870.772
S3                381567.855         5032859.534
S3                381567.277         5032860.913
S3                381600.122         5032875.319
S4                381524.892         5032839.223
S4                381521.312         5032821.582
S4                381563.78          5032812.963
S4                381562.788         5032808.079
S4                381521.032         5032816.77
S4                381516.421         5032820.775
S4                381519.182         5032849.734
S4                381520.586         5032849.638
S4                381524.866         5032848.769
S4                381525.228         5032848.183
S4                381524.284         5032843.53
S4                381525.411         5032841.771
S4                381524.892         5032839.223
S5                381545.732         5032851.464
S5                381567.277         5032860.913
S5                381567.855         5032859.534
S5                381567.897         5032859.438
S5                381567.158         5032859.115
S5                381566.874         5032858.986
S5                381566.594         5032858.846
S5                381566.319         5032858.697
S5                381566.05          5032858.539
S5                381565.786         5032858.372
S5                381565.528         5032858.196
S5                381565.276         5032858.012
S5                381565.03          5032857.819
S5                381564.792         5032857.617
S5                381564.56          5032857.408
S5                381564.335         5032857.191
S5                381564.118         5032856.966
S5                381563.908         5032856.735
S5                381563.707         5032856.496
S5                381563.514         5032856.25
S5                381563.329         5032855.999
S5                381563.153         5032855.741
S5                381562.986         5032855.477
S5                381562.827         5032855.207
S5                381562.681         5032854.937
S5                381562.543         5032854.662
S5                381562.415         5032854.382
S5                381562.296         5032854.099
S5                381562.186         5032853.811
S5                381562.087         5032853.52
S5                381561.997         5032853.226
S5                381561.917         5032852.929
S5                381561.846         5032852.63
S5                381561.812         5032852.481
S5                381561.773         5032852.334
S5                381561.729         5032852.188
S5                381561.68          5032852.043
S5                381561.627         5032851.9
S5                381561.569         5032851.759
S5                381561.507         5032851.62
S5                381561.441         5032851.483
S5                381561.615         5032851.396
S5                381568.16          5032850.064
S5                381572.167         5032851.809
S5                381574.562         5032846.312
S5                381570.746         5032844.646
S5                381570.904         5032844.497
S5                381568.214         5032843.324
S5                381568.127         5032843.284
S5                381568.041         5032843.241
S5                381567.957         5032843.195
S5                381567.874         5032843.147
S5                381567.793         5032843.096
S5                381567.714         5032843.041
S5                381567.637         5032842.985
S5                381567.561         5032842.925
S5                381567.488         5032842.863
S5                381567.417         5032842.799
S5                381567.348         5032842.732
S5                381567.282         5032842.663
S5                381567.218         5032842.591
S5                381567.156         5032842.518
S5                381567.097         5032842.442
S5                381567.041         5032842.365
S5                381566.987         5032842.285
S5                381566.936         5032842.204
S5                381566.888         5032842.121
S5                381566.843         5032842.036
S5                381566.8           5032841.95
S5                381566.761         5032841.863
S5                381566.725         5032841.774
S5                381566.692         5032841.684
S5                381566.661         5032841.593
S5                381566.634         5032841.501
S5                381566.611         5032841.408
S5                381566.59          5032841.314
S5                381565.348         5032835.196
S5                381564.854         5032833.766
S5                381564.337         5032831.218
S5                381546.649         5032834.808
S5                381537.422         5032836.68
S5                381536.967         5032834.441
S5                381534.419         5032834.958
S5                381534.873         5032837.198
S5                381524.892         5032839.223
S5                381525.411         5032841.771
S5                381524.284         5032843.53
S5                381525.228         5032848.183
S5                381524.866         5032848.769
S5                381520.586         5032849.638
S5                381519.182         5032849.734
S5                381519.868         5032856.933
S5                381545.732         5032851.464
S6                381574.562         5032846.312
S6                381574.562         5032846.312
S6                381572.167         5032851.809
S6                381581.761         5032854.864
S6                381590.946         5032833.812
S6                381603.052         5032806.066
S6                381601.782         5032799.963
S6                381562.788         5032808.079
S6                381563.78          5032812.963
S6                381573.49          5032810.992
S6                381577.07          5032828.633
S6                381564.337         5032831.218
S6                381564.854         5032833.766
S6                381565.348         5032835.196
S6                381566.59          5032841.314
S6                381566.611         5032841.408
S6                381566.635         5032841.501
S6                381566.662         5032841.593
S6                381566.692         5032841.684
S6                381566.725         5032841.774
S6                381566.761         5032841.862
S6                381566.801         5032841.95
S6                381566.843         5032842.036
S6                381566.888         5032842.121
S6                381566.937         5032842.203
S6                381566.988         5032842.285
S6                381567.041         5032842.364
S6                381567.098         5032842.442
S6                381567.157         5032842.517
S6                381567.218         5032842.591
S6                381567.282         5032842.662
S6                381567.349         5032842.732
S6                381567.417         5032842.798
S6                381567.488         5032842.863
S6                381567.562         5032842.925
S6                381567.637         5032842.984
S6                381567.714         5032843.041
S6                381567.793         5032843.095
S6                381567.874         5032843.147
S6                381567.957         5032843.195
S6                381568.041         5032843.241
S6                381568.127         5032843.284
S6                381568.214         5032843.324
S6                381570.904         5032844.497
S6                381570.746         5032844.646
S6                381574.562         5032846.312
S7                381627.999         5032794.506
S7                381601.782         5032799.963
S7                381603.052         5032806.066
S7                381619.55          5032813.264
S7                381614.354         5032825.173
S7                381620.836         5032828.001
S7                381632.862         5032800.531
S7                381627.999         5032794.506
S8                381597.544         5032861.751
S8                381581.761         5032854.863
S8                381572.167         5032851.809
S8                381568.16          5032850.064
S8                381561.615         5032851.396
S8                381561.441         5032851.483
S8                381561.507         5032851.62
S8                381561.569         5032851.759
S8                381561.627         5032851.9
S8                381561.68          5032852.043
S8                381561.729         5032852.188
S8                381561.773         5032852.334
S8                381561.812         5032852.481
S8                381561.846         5032852.63
S8                381561.917         5032852.929
S8                381561.997         5032853.226
S8                381562.087         5032853.52
S8                381562.186         5032853.811
S8                381562.296         5032854.099
S8                381562.415         5032854.382
S8                381562.543         5032854.662
S8                381562.681         5032854.937
S8                381562.827         5032855.207
S8                381562.986         5032855.477
S8                381563.153         5032855.741
S8                381563.329         5032855.999
S8                381563.514         5032856.25
S8                381563.707         5032856.496
S8                381563.908         5032856.735
S8                381564.118         5032856.966
S8                381564.335         5032857.191
S8                381564.56          5032857.408
S8                381564.792         5032857.617
S8                381565.03          5032857.819
S8                381565.276         5032858.012
S8                381565.528         5032858.196
S8                381565.786         5032858.372
S8                381566.05          5032858.539
S8                381566.319         5032858.697
S8                381566.594         5032858.846
S8                381566.874         5032858.986
S8                381567.158         5032859.115
S8                381567.897         5032859.438
S8                381567.855         5032859.534
S8                381593.609         5032870.772
S8                381597.544         5032861.751
S9                381581.761         5032854.865
S9                381598.259         5032862.063
S9                381602.332         5032852.729
S9                381600.237         5032851.815
S9                381601.278         5032849.431
S9                381603.372         5032850.345
S9                381619.55          5032813.264
S9                381603.052         5032806.066
S9                381581.761         5032854.865

;;Storage Node    X-Coord            Y-Coord
```

```
;;-------------- ------------------ ------------------

[SYMBOLS]
;;Gage           X-Coord            Y-Coord
;;-------------- ------------------ ------------------
```

```
EPA STORM WATER MANAGEMENT MODEL - VERSION 5.2 (Build 5.2.4)
------------------------------------------------------------

*************
Element Count
*************
Number of rain gages ...... 1
Number of subcatchments ... 10
Number of nodes ........... 13
Number of links ........... 9
Number of pollutants ...... 0
Number of land uses ....... 0

****************
Raingage Summary
****************
                                                  Data       Recording
Name                Data Source                   Type       Interval
-------------------------------------------------------------------------
3CHI100             3CHI100                       INTENSITY   10 min.

********************
Subcatchment Summary
********************
Name                        Area     Width   %Imperv    %Slope Rain Gage            Outlet
-----------------------------------------------------------------------------------------------
---------------
S1                          0.03     38.60     14.29    1.5000 3CHI100              CB120
S10                         0.10     18.00    100.00    1.0000 3CHI100              Roof2
S2                          0.02     38.94     11.12    2.1000 3CHI100              CB124
S3                          0.02     26.02      0.00    2.0000 3CHI100              OF2
S4                          0.04    163.64      3.09    1.5000 3CHI100              CB125
S5                          0.09     79.85     77.46    2.0000 3CHI100              CB120
S6                          0.11    105.72     17.82    2.1000 3CHI100              CB121
S7                          0.05     44.22     13.68    3.3000 3CHI100              CB122
S8                          0.03     11.98     95.75    5.2000 3CHI100              St_UnGrd
S9                          0.10     18.00    100.00    1.0000 3CHI100              Roof1

************
Node Summary
************
                                          Invert      Max.    Ponded    External
Name                Type                   Elev.     Depth      Area    Inflow
-----------------------------------------------------------------------------------
MH505               OUTFALL                78.00      0.00       0.0
OF2                 OUTFALL                 0.00      0.00       0.0
OF3                 OUTFALL                78.88      0.00       0.0
OF4                 OUTFALL                78.88      0.00       0.0
CB120               STORAGE                82.10      0.30       0.0
CB121               STORAGE                82.28      0.30       0.0
CB122               STORAGE                79.35      1.70       0.0
CB123               STORAGE                79.17      2.18       0.0
CB124               STORAGE                79.47      1.78       0.0
CB125               STORAGE                80.20      2.00       0.0
Roof1               STORAGE                88.85      0.15       0.0
Roof2               STORAGE                88.85      0.15       0.0
St_UnGrd            STORAGE                78.00      1.00       0.0    Yes

************
Link Summary
************
Name                From Node        To Node          Type            Length    %Slope
Roughness
-----------------------------------------------------------------------------------------
-
C1                  CB124            CB123            CONDUIT           23.3    0.9862
0.0130
C2                  CB122            CB123            CONDUIT           12.2    0.9965
0.0130
BLDG_E              Roof2            OF4              OUTLET
BLDG_F              Roof1            OF3              OUTLET
CB120               CB120            St_UnGrd         OUTLET
CB121               CB121            St_UnGrd         OUTLET
CB123               CB123            St_UnGrd         OUTLET
CB125               CB125            St_UnGrd         OUTLET
OL1                 St_UnGrd         MH505            OUTLET

*********************
Cross Section Summary
*********************
                                        Full     Full     Hyd.     Max.   No. of     Full
Conduit             Shape              Depth     Area     Rad.    Width  Barrels     Flow
-----------------------------------------------------------------------------------------
C1                  CIRCULAR            0.25     0.05     0.06     0.25        1     0.06
C2                  CIRCULAR            0.25     0.05     0.06     0.25        1     0.06

****************
Analysis Options
****************
Flow Units ............... CMS
Process Models:
  Rainfall/Runoff ........ YES
  RDII ................... NO
  Snowmelt ............... NO
  Groundwater ............ NO
  Flow Routing ........... YES
  Ponding Allowed ........ NO
  Water Quality .......... NO
Infiltration Method ...... HORTON
Flow Routing Method ...... DYNWAVE
Surcharge Method ......... EXTRAN
Starting Date ............ 01/01/2000 00:00:00
Ending Date .............. 01/01/2000 03:00:00
Antecedent Dry Days ...... 0.0
Report Time Step ......... 00:00:05
Wet Time Step ............ 00:02:00
Dry Time Step ............ 00:02:00
Routing Time Step ........ 5.00 sec
Variable Time Step ....... YES
Maximum Trials ........... 8
Number of Threads ........ 1
Head Tolerance ........... 0.001500 m

**************************        Volume         Depth
Runoff Quantity Continuity     hectare-m            mm
**************************     ---------       --------
Total Precipitation ......         0.042        71.708
Evaporation Loss .........         0.000         0.000
Infiltration Loss ........         0.012        19.860
Surface Runoff ...........         0.030        50.847
Final Storage ............         0.001         1.269
Continuity Error (%) .....        -0.374

**************************        Volume        Volume
Flow Routing Continuity        hectare-m      10^6 ltr
**************************     ---------      ---------
Dry Weather Inflow .......         0.000         0.000
Wet Weather Inflow .......         0.030         0.299
Groundwater Inflow .......         0.000         0.000
RDII Inflow ..............         0.000         0.000
External Inflow ..........         0.003         0.031
External Outflow .........         0.023         0.233
Flooding Loss ............         0.000         0.000
Evaporation Loss .........         0.000         0.000
Exfiltration Loss ........         0.000         0.000
Initial Stored Volume ....         0.000         0.000
Final Stored Volume ......         0.010         0.096
```

Continuity Error (%) 0.028

****
Time-Step Critical Elements
****

None

****
Highest Flow Instability Indexes
****

Link C2 (4)
Link C1 (3)

****
Most Frequent Nonconverging Nodes
****

Convergence obtained at all time steps.

****
Routing Time Step Summary
****

Minimum Time Step	:	1.01 sec
Average Time Step	:	4.99 sec
Maximum Time Step	:	5.00 sec
% of Time in Steady State	:	0.00
Average Iterations per Step	:	2.01
% of Steps Not Converging	:	0.05
Time Step Frequencies	:	
5.000 - 3.155 sec	:	99.77 %
3.155 - 1.991 sec	:	0.18 %
1.991 - 1.256 sec	:	0.00 %
1.256 - 0.792 sec	:	0.05 %
0.792 - 0.500 sec	:	0.00 %

****
Subcatchment Runoff Summary
****

Subcatchment	Total Precip mm	Total Runon mm	Total Evap mm	Total Infil mm	Imperv Runoff mm	Perv Runoff mm	Total Runoff mm	Total Runoff 10^6 ltr	Peak Runoff CMS	Runoff Coeff
S1	71.71	0.00	0.00	39.23	10.02	32.49	32.49	0.01	0.01	0.453
S10	71.71	0.00	0.00	0.00	69.39	0.00	69.39	0.07	0.05	0.968
S2	71.71	0.00	0.00	40.02	7.81	31.87	31.87	0.01	0.01	0.444
S3	71.71	0.00	0.00	43.90	0.00	28.05	28.05	0.01	0.01	0.391
S4	71.71	0.00	0.00	42.42	2.17	29.69	29.69	0.01	0.02	0.414
S5	71.71	0.00	0.00	9.77	54.30	6.49	60.79	0.05	0.04	0.848
S6	71.71	0.00	0.00	36.14	12.50	22.97	35.47	0.04	0.04	0.495
S7	71.71	0.00	0.00	39.37	9.60	32.39	32.39	0.02	0.02	0.452
S8	71.71	0.00	0.00	2.17	67.06	67.58	67.58	0.02	0.02	0.942
S9	71.71	0.00	0.00	0.00	69.40	0.00	69.40	0.07	0.05	0.968

****
Node Depth Summary
****

Node	Type	Average Depth Meters	Maximum Depth Meters	Maximum HGL Meters	Time of Max Occurrence days	hr:min	Reported Max Depth Meters
MH505	OUTFALL	0.00	0.00	78.00	0	00:00	0.00
OF2	OUTFALL	0.00	0.00	0.00	0	00:00	0.00
OF3	OUTFALL	0.00	0.00	78.88	0	00:00	0.00
OF4	OUTFALL	0.00	0.00	78.88	0	00:00	0.00
CB120	STORAGE	0.01	0.10	82.20	0	01:10	0.10
CB121	STORAGE	0.01	0.06	82.34	0	01:10	0.06
CB122	STORAGE	0.47	1.63	80.98	0	01:22	1.63
CB123	STORAGE	0.56	1.81	80.98	0	01:22	1.81
CB124	STORAGE	0.42	1.51	80.98	0	01:22	1.51
CB125	STORAGE	0.30	1.86	82.06	0	01:13	1.86
Roof1	STORAGE	0.05	0.08	88.93	0	02:23	0.08
Roof2	STORAGE	0.05	0.08	88.93	0	02:23	0.08
St_UnGrd	STORAGE	0.19	0.97	78.97	0	01:22	0.97

****
Node Inflow Summary
****

Node	Type	Maximum Lateral Inflow CMS	Maximum Total Inflow CMS	Time of Max Occurrence days	hr:min	Lateral Inflow Volume 10^6 ltr	Total Inflow Volume 10^6 ltr	Flow Balance Error Percent
MH505	OUTFALL	0.000	0.041	0	01:02	0	0.192	0.000
OF2	OUTFALL	0.008	0.008	0	01:10	0.00569	0.00569	0.000
OF3	OUTFALL	0.000	0.002	0	00:38	0	0.018	0.000
OF4	OUTFALL	0.000	0.002	0	00:38	0	0.018	0.000
CB120	STORAGE	0.056	0.056	0	01:10	0.0643	0.0643	0.002
CB121	STORAGE	0.045	0.045	0	01:10	0.0402	0.0402	0.004
CB122	STORAGE	0.020	0.025	0	01:10	0.0159	0.0161	0.261
CB123	STORAGE	0.000	0.017	0	01:09	0	0.0232	0.011
CB124	STORAGE	0.009	0.012	0	01:05	0.00695	0.00706	0.003
CB125	STORAGE	0.017	0.017	0	01:10	0.0115	0.0115	0.336
Roof1	STORAGE	0.047	0.047	0	01:10	0.066	0.066	0.006
Roof2	STORAGE	0.047	0.047	0	01:10	0.066	0.066	0.006
St_UnGrd	STORAGE	0.021	0.114	0	01:10	0.0528	0.192	-0.001

****
Node Surcharge Summary
****

No nodes were surcharged.

****
Node Flooding Summary
****

No nodes were flooded.

****
Storage Volume Summary
****

Storage Unit	Average Volume 1000 m³	Avg Pcnt Full	Evap Pcnt Loss	Exfil Pcnt Loss	Maximum Volume 1000 m³	Max Pcnt Full	Time of Max Occurrence days	hr:min	Maximum Outflow CMS
CB120	0.000	0.6	0.0	0.0	0.006	11.2	0	01:10	0.043
CB121	0.000	0.2	0.0	0.0	0.002	4.6	0	01:10	0.039
CB122	0.001	7.1	0.0	0.0	0.005	50.7	0	01:22	0.014
CB123	0.000	25.6	0.0	0.0	0.001	82.9	0	01:22	0.011
CB124	0.000	0.9	0.0	0.0	0.000	3.1	0	01:22	0.011
CB125	0.000	4.1	0.0	0.0	0.004	43.3	0	01:13	0.006
Roof1	0.029	30.9	0.0	0.0	0.049	51.1	0	02:23	0.002
Roof2	0.029	30.9	0.0	0.0	0.049	51.2	0	02:23	0.002
St_UnGrd	0.009	19.1	0.0	0.0	0.047	96.9	0	01:22	0.041

****
Outfall Loading Summary
****

Outfall Node	Flow Freq Pcnt	Avg Flow CMS	Max Flow CMS	Total Volume 10^6 ltr
MH505	99.40	0.018	0.041	0.192
OF2	32.12	0.002	0.008	0.006
OF3	89.00	0.002	0.002	0.018
OF4	89.00	0.002	0.002	0.018
System	77.38	0.023	0.053	0.233

****
Link Flow Summary
****

Link	Type	Maximum |Flow| CMS	Time of Max Occurrence days	hr:min	Maximum |Veloc| m/sec	Max/ Full Flow	Max/ Full Depth
C1	CONDUIT	0.011	0	01:10	0.45	0.19	1.00
C2	CONDUIT	0.014	0	01:09	0.59	0.23	1.00
BLDG_E	DUMMY	0.002	0	00:38			
BLDG_F	DUMMY	0.002	0	00:38			
CB120	DUMMY	0.043	0	01:10			
CB121	DUMMY	0.039	0	01:10			
CB123	DUMMY	0.006	0	01:22			
CB125	DUMMY	0.006	0	01:13			
OL1	DUMMY	0.041	0	01:02			

****
Flow Classification Summary
****

Conduit	Adjusted /Actual Length	Dry	Up Dry	Down Dry	Sub Crit	Sup Crit	Up Crit	Down Crit	Norm Ltd	Inlet Ctrl
		Fraction of Time in Flow Class								
C1	1.00	0.33	0.00	0.00	0.48	0.00	0.00	0.19	0.07	0.00
C2	1.00	0.33	0.00	0.00	0.48	0.00	0.00	0.19	0.04	0.00

****
Conduit Surcharge Summary
****

Conduit	Hours Full Both Ends	Hours Full Upstream	Hours Full Dnstream	Hours Above Full Normal Flow	Hours Capacity Limited
C1	1.04	1.04	1.21	0.01	0.01
C2	1.12	1.12	1.22	0.01	0.01

Analysis begun on: Thu Sep 26 08:32:10 2024
Analysis ended on: Thu Sep 26 08:32:10 2024
Total elapsed time: < 1 sec

Post-Development 24-hour SCS 1:100-year Event

```
[TITLE]
;;Project Title/Notes

[OPTIONS]
;;Option             Value
FLOW_UNITS           CMS
INFILTRATION         HORTON
FLOW_ROUTING         DYNWAVE
LINK_OFFSETS         ELEVATION
MIN_SLOPE            0
ALLOW_PONDING        NO
SKIP_STEADY_STATE    NO

START_DATE           01/01/2000
START_TIME           00:00:00
REPORT_START_DATE    01/01/2000
REPORT_START_TIME    00:00:00
END_DATE             01/02/2000
END_TIME             00:00:00
SWEEP_START          01/01
SWEEP_END            12/31
DRY_DAYS             0
REPORT_STEP          00:01:00
WET_STEP             00:05:00
DRY_STEP             00:05:00
ROUTING_STEP         5
RULE_STEP            00:00:00

INERTIAL_DAMPING     PARTIAL
NORMAL_FLOW_LIMITED  BOTH
FORCE_MAIN_EQUATION  H-W
VARIABLE_STEP        0.75
LENGTHENING_STEP     0
MIN_SURFAREA         0
MAX_TRIALS           8
HEAD_TOLERANCE       0.0015
SYS_FLOW_TOL         5
LAT_FLOW_TOL         5
MINIMUM_STEP         0.5
THREADS              12

[EVAPORATION]
;;Data Source    Parameters
;;-------------- ----------------
CONSTANT         0.0
DRY_ONLY         NO

[RAINGAGES]
;;Name           Format    Interval SCF      Source
;;-------------- --------- -------- -------- ----------
24SCS100         INTENSITY 0:15     1.0      TIMESERIES 24SCS100
3CHI100          INTENSITY 0:10     1.0      TIMESERIES 3CHI100

[SUBCATCHMENTS]
;;Name           Rain Gage        Outlet           Area     %Imperv  Width    %Slope   CurbLen
SnowPack
;;-------------- ---------------- ---------------- -------- -------- -------- -------- -------
- ----------------
S1               24SCS100         CB120            0.0331   14.286   38.601   1.5      0
S10              24SCS100         Roof2            0.0953   100      18       1        0
S2               24SCS100         CB124            0.0218   11.125   38.94    2.1      0
S3               24SCS100         OF2              0.0203   0        26.019   2        0
S4               24SCS100         CB125            0.0388   3.093    163.644  1.5      0
S5               24SCS100         CB120            0.0881   77.464   79.845   2        0
S6               24SCS100         CB121            0.1134   17.819   105.724  2.1      0
S7               24SCS100         CB122            0.0492   13.679   44.221   3.3      0
S8               24SCS100         St_UnGrd         0.0327   95.747   11.978   5.2      0
S9               24SCS100         Roof1            0.0952   100      18       1        0

[SUBAREAS]
;;Subcatchment   N-Imperv   N-Perv     S-Imperv   S-Perv     PctZero    RouteTo    PctRouted
;;-------------- ---------- ---------- ---------- ---------- ---------- ---------- ----------
S1               0.013      0.25       1.57       4.67       0          PERVIOUS   100
S10              0.013      0.25       1.57       4.67       0          OUTLET
S2               0.013      0.25       1.57       4.67       0          PERVIOUS   100
S3               0.013      0.25       1.57       4.67       0          PERVIOUS   100
S4               0.013      0.25       1.57       4.67       0          PERVIOUS   100
S5               0.013      0.25       1.57       4.67       0          OUTLET
S6               0.013      0.25       1.57       4.67       0          OUTLET
S7               0.013      0.25       1.57       4.67       0          PERVIOUS   100
S8               0.013      0.25       1.57       4.67       0          PERVIOUS   100
S9               0.013      0.25       1.57       4.67       0          OUTLET

[INFILTRATION]
;;Subcatchment   Param1     Param2     Param3     Param4     Param5
;;-------------- ---------- ---------- ---------- ---------- ----------
S1               76.2       13.2       4.14       7          0
S10              76.2       13.2       4.14       7          0
S2               76.2       13.2       4.14       7          0
S3               76.2       13.2       4.14       7          0
S4               76.2       13.2       4.14       7          0
S5               76.2       13.2       4.14       7          0
S6               76.2       13.2       4.14       7          0
S7               76.2       13.2       4.14       7          0
S8               76.2       13.2       4.14       7          0
S9               76.2       13.2       4.14       7          0

[OUTFALLS]
;;Name           Elevation  Type       Stage Data       Gated    Route To
;;-------------- ---------- ---------- ---------------- -------- ----------------
MH505            78         NORMAL                      NO
OF2              0          FREE                        NO
OF3              78.88      NORMAL                      NO
OF4              78.88      NORMAL                      NO

[STORAGE]
;;Name           Elev.    MaxDepth   InitDepth  Shape       Curve Name/Params
SurDepth Fevap    Psi      Ksat     IMD
;;-------------- -------- --------- ---------- ----------- ---------------------------- -----
--- --------- -------- -------- --------
CB120            82.1     0.3        0          TABULAR     CB120                        0
0
CB121            82.28    0.3        0          TABULAR     CB121                        0
0
CB122            79.35    1.7        0          TABULAR     CB122                        0
0
CB123            79.168   2.182      0          TABULAR     CB123                        0
0
CB124            79.47    1.78       0          TABULAR     CB124                        0
0
CB125            80.2     2          0          TABULAR     CB125                        0
0
Roof1            88.85    0.15       0          FUNCTIONAL  0         0         635      0
0
Roof2            88.85    0.15       0          FUNCTIONAL  0         0         635      0
0
St_UnGrd         78       1          0          FUNCTIONAL  0         0         49       0
0

[CONDUITS]
;;Name           From Node        To Node          Length     Roughness  InOffset   OutOffset
InitFlow   MaxFlow
;;-------------- ---------------- ---------------- ---------- ---------- ---------- ----------
---------- ----------
C1               CB124            CB123            23.322     0.013      79.47      79.24
0          0.04
C2               CB122            CB123            12.244     0.013      79.35      79.228
0          0.04

[OUTLETS]
;;Name           From Node        To Node          Offset     Type             QTable/Qcoeff
Qexpon     Gated
;;-------------- ---------------- ---------- ---------- ---------- ---------- ----------
- ----------
BLDG_E           Roof2            OF4              88.85      TABULAR/HEAD     O_Roof2
NO
BLDG_F           Roof1            OF3              88.85      TABULAR/HEAD     O_Roof1
NO
CB120            CB120            St_UnGrd         82.1       TABULAR/HEAD     ZURN_Z150F-6NH
NO
CB121            CB121            St_UnGrd         82.28      TABULAR/HEAD     ZURN_Z150F-6NH
NO
CB123            CB123            St_UnGrd         79.168     TABULAR/HEAD     Vortex_ICD_70
NO
CB125            CB125            St_UnGrd         80.2       TABULAR/HEAD     Vortex_ICD_70
NO
OL1              St_UnGrd         MH505            78         TABULAR/HEAD     O_St_UnGrd
NO

[XSECTIONS]
;;Link           Shape        Geom1            Geom2      Geom3      Geom4      Barrels
Culvert
;;-------------- ------------ ---------------- ---------- ---------- ---------- ---------- ---
-------
C1               CIRCULAR     0.25             0          0          0          1
C2               CIRCULAR     0.25             0          0          0          1

[LOSSES]
;;Link           Kentry     Kexit      Kavg       Flap Gate  Seepage
;;-------------- ---------- ---------- ---------- ---------- ----------

[INFLOWS]
;;Node           Constituent      Time Series      Type     Mfactor  Sfactor  Baseline Pattern
;;-------------- ---------------- ---------------- -------- -------- -------- -------- -------
-
St_UnGrd         FLOW             InfiltratedInflow FLOW     1.0      1        0

[CURVES]
;;Name           Type       X-Value    Y-Value
;;-------------- ---------- ---------- ----------
;CBMH Inlet Capture Curve based on the OSDG Appendix 7-A
CBMH             Rating     0          0
CBMH                        0.122      0.06
CBMH                        0.183      0.073
CBMH                        0.2        0.076
CBMH                        0.243      0.084
CBMH                        0.305      0.094

DI_GRATE_A_OPSD403.01 Rating     0.02       0.00762
DI_GRATE_A_OPSD403.01            0.04       0.01524
DI_GRATE_A_OPSD403.01            0.08       0.0381
DI_GRATE_A_OPSD403.01            0.12       0.06858
DI_GRATE_A_OPSD403.01            0.2        0.1524
DI_GRATE_A_OPSD403.01            0.26       0.23622
DI_GRATE_A_OPSD403.01            0.36       0.4572
DI_GRATE_A_OPSD403.01            0.46       0.6858

DI_GRATE_C_OPSD403.01 Rating     0.02       0.01465
DI_GRATE_C_OPSD403.01            0.04       0.0293
DI_GRATE_C_OPSD403.01            0.08       0.07325
DI_GRATE_C_OPSD403.01            0.12       0.13185
DI_GRATE_C_OPSD403.01            0.2        0.293
DI_GRATE_C_OPSD403.01            0.26       0.45415
DI_GRATE_C_OPSD403.01            0.36       0.879
DI_GRATE_C_OPSD403.01            0.46       1.3185

Les Produits MURPHCO Ltée Rating     0          0
Les Produits MURPHCO Ltée            0.0127     4E-05
Les Produits MURPHCO Ltée            0.0254     0.00019
Les Produits MURPHCO Ltée            0.0381     0.00032
Les Produits MURPHCO Ltée            0.0508     0.00051
Les Produits MURPHCO Ltée            0.0635     0.00064
Les Produits MURPHCO Ltée            0.0762     0.00083
Les Produits MURPHCO Ltée            0.0889     0.00093
Les Produits MURPHCO Ltée            0.1016     0.00101
Les Produits MURPHCO Ltée            0.1143     0.00111
Les Produits MURPHCO Ltée            0.127      0.0012
Les Produits MURPHCO Ltée            0.1397     0.00128
Les Produits MURPHCO Ltée            0.1524     0.00135

;Reversed Flow from rear yard manhole_Lid to the Street
Manhole_Lid      Rating     0          0
Manhole_Lid                 0.11       0
Manhole_Lid                 0.2        0.187
Manhole_Lid                 0.3        0.395
Manhole_Lid                 0.4        0.602
Manhole_Lid                 0.5        0.81
Manhole_Lid                 0.6        1.018
Manhole_Lid                 0.7        1.225
Manhole_Lid                 0.8        1.433
Manhole_Lid                 0.9        1.641
Manhole_Lid                 1          1.848

;Tempest Rating Curve for MHF IPEX TYPE A, No grate allowance
MHF_IPEX_TYPE_A  Rating     0          0
MHF_IPEX_TYPE_A             0.1        0.0057
MHF_IPEX_TYPE_A             0.2        0.0081
MHF_IPEX_TYPE_A             0.3        0.0099
MHF_IPEX_TYPE_A             0.4        0.0114
MHF_IPEX_TYPE_A             0.5        0.0128
MHF_IPEX_TYPE_A             0.6        0.014
MHF_IPEX_TYPE_A             0.7        0.0151
MHF_IPEX_TYPE_A             0.8        0.0162
MHF_IPEX_TYPE_A             0.9        0.0172
MHF_IPEX_TYPE_A             1          0.0181
MHF_IPEX_TYPE_A             1.2        0.0198
MHF_IPEX_TYPE_A             1.4        0.0214
MHF_IPEX_TYPE_A             1.6        0.0229
MHF_IPEX_TYPE_A             1.8        0.0243
MHF_IPEX_TYPE_A             2          0.0256
MHF_IPEX_TYPE_A             2.5        0.0286
MHF_IPEX_TYPE_A             3          0.0313

;Tempest Rating Curve for MHF IPEX TYPE B, No grate allowance
MHF_IPEX_TYPE_B  Rating     0          0
MHF_IPEX_TYPE_B             0.1        0.0081
MHF_IPEX_TYPE_B             0.2        0.0115
MHF_IPEX_TYPE_B             0.3        0.0141
MHF_IPEX_TYPE_B             0.4        0.0162
MHF_IPEX_TYPE_B             0.5        0.0182
MHF_IPEX_TYPE_B             0.6        0.0199
MHF_IPEX_TYPE_B             0.7        0.0215
MHF_IPEX_TYPE_B             0.8        0.023
MHF_IPEX_TYPE_B             0.9        0.0244
MHF_IPEX_TYPE_B             1          0.0257
MHF_IPEX_TYPE_B             1.2        0.0281
MHF_IPEX_TYPE_B             1.4        0.0304
MHF_IPEX_TYPE_B             1.6        0.0325
MHF_IPEX_TYPE_B             1.8        0.0344
MHF_IPEX_TYPE_B             2          0.0363
MHF_IPEX_TYPE_B             2.5        0.0406
MHF_IPEX_TYPE_B             3          0.0445

;Tempest Rating Curve for MHF IPEX TYPE C, No grate allowance
MHF_IPEX_TYPE_C  Rating     0          0
MHF_IPEX_TYPE_C             0.1        0.0106
MHF_IPEX_TYPE_C             0.2        0.015
MHF_IPEX_TYPE_C             0.3        0.0183
MHF_IPEX_TYPE_C             0.4        0.0212
MHF_IPEX_TYPE_C             0.5        0.0237
MHF_IPEX_TYPE_C             0.6        0.0259
MHF_IPEX_TYPE_C             0.7        0.028
MHF_IPEX_TYPE_C             0.8        0.0299
MHF_IPEX_TYPE_C             0.9        0.0317
MHF_IPEX_TYPE_C             1          0.0335
MHF_IPEX_TYPE_C             1.2        0.0366
MHF_IPEX_TYPE_C             1.4        0.0396
MHF_IPEX_TYPE_C             1.6        0.0423
MHF_IPEX_TYPE_C             1.8        0.0449
```

```
MHF_IPEX_TYPE_C             2          0.0473
MHF_IPEX_TYPE_C             2.5        0.0529
MHF_IPEX_TYPE_C             3          0.0579

;Tempest Rating Curve for MHF IPEX TYPE D, No grate allowance
MHF_IPEX_TYPE_D  Rating     0          0
MHF_IPEX_TYPE_D             0.1        0.0154
MHF_IPEX_TYPE_D             0.2        0.0217
MHF_IPEX_TYPE_D             0.3        0.0266
MHF_IPEX_TYPE_D             0.4        0.0307
MHF_IPEX_TYPE_D             0.5        0.0343
MHF_IPEX_TYPE_D             0.6        0.0376
MHF_IPEX_TYPE_D             0.7        0.0406
MHF_IPEX_TYPE_D             0.8        0.0434
MHF_IPEX_TYPE_D             0.9        0.0461
MHF_IPEX_TYPE_D             1          0.0485
MHF_IPEX_TYPE_D             1.2        0.0532
MHF_IPEX_TYPE_D             1.4        0.0574
MHF_IPEX_TYPE_D             1.6        0.0614
MHF_IPEX_TYPE_D             1.8        0.0651
MHF_IPEX_TYPE_D             2          0.0687
MHF_IPEX_TYPE_D             2.5        0.0768
MHF_IPEX_TYPE_D             3          0.0841

;Tempest Rating Curve for MHF IPEX TYPE E, No grate allowance
MHF_IPEX_TYPE_E  Rating     0          0
MHF_IPEX_TYPE_E             0.1        0.0205
MHF_IPEX_TYPE_E             0.2        0.0289
MHF_IPEX_TYPE_E             0.3        0.0355
MHF_IPEX_TYPE_E             0.4        0.0409
MHF_IPEX_TYPE_E             0.5        0.0458
MHF_IPEX_TYPE_E             0.6        0.0501
MHF_IPEX_TYPE_E             0.7        0.0542
MHF_IPEX_TYPE_E             0.8        0.0579
MHF_IPEX_TYPE_E             0.9        0.0614
MHF_IPEX_TYPE_E             1          0.0647
MHF_IPEX_TYPE_E             1.2        0.0709
MHF_IPEX_TYPE_E             1.4        0.0766
MHF_IPEX_TYPE_E             1.6        0.0819
MHF_IPEX_TYPE_E             1.8        0.0868
MHF_IPEX_TYPE_E             2          0.0915
MHF_IPEX_TYPE_E             2.5        0.1023
MHF_IPEX_TYPE_E             3          0.1121

O_Roof1          Rating     0          0
O_Roof1                     0.001      0.002
O_Roof1                     0.15       0.002

O_Roof2          Rating     0          0
O_Roof2                     0.001      0.002
O_Roof2                     0.15       0.002

O_St_L1          Rating     0          0
O_St_L1                     0.001      0.003
O_St_L1                     0.35       0.003

O_St_L2          Rating     0          0
O_St_L2                     0.001      0.002
O_St_L2                     0.35       0.002

O_St_L3          Rating     0          0
O_St_L3                     0.001      0.0137
O_St_L3                     0.35       0.0137

O_St_UnGrd       Rating     0          0
O_St_UnGrd                  0.01       0.041
O_St_UnGrd                  1          0.041

;Tempest Rating Curve for Vortex ICD 100, No grate allowance
Vortex_ICD_100   Rating     0          0
Vortex_ICD_100              0.1        0.0028
Vortex_ICD_100              0.2        0.004
Vortex_ICD_100              0.3        0.0049
Vortex_ICD_100              0.4        0.0056
Vortex_ICD_100              0.5        0.0063
Vortex_ICD_100              0.6        0.0069
Vortex_ICD_100              0.7        0.0075
Vortex_ICD_100              0.8        0.008
Vortex_ICD_100              0.9        0.0085
Vortex_ICD_100              1          0.0089
Vortex_ICD_100              1.2        0.0098
Vortex_ICD_100              1.4        0.0106
Vortex_ICD_100              1.6        0.0113
Vortex_ICD_100              1.8        0.012
Vortex_ICD_100              2          0.0126
Vortex_ICD_100              2.5        0.0141
Vortex_ICD_100              3          0.0155

;Tempest Rating Curve for Vortex ICD 105, No grate allowance
Vortex_ICD_105   Rating     0          0
Vortex_ICD_105              0.1        0.0031
Vortex_ICD_105              0.2        0.0044
Vortex_ICD_105              0.3        0.0054
Vortex_ICD_105              0.4        0.0062
Vortex_ICD_105              0.5        0.0069
Vortex_ICD_105              0.6        0.0076
Vortex_ICD_105              0.7        0.0082
Vortex_ICD_105              0.8        0.0088
Vortex_ICD_105              0.9        0.0093
Vortex_ICD_105              1          0.0098
Vortex_ICD_105              1.2        0.0107
Vortex_ICD_105              1.4        0.0116
Vortex_ICD_105              1.6        0.0124
Vortex_ICD_105              1.8        0.0131
Vortex_ICD_105              2          0.0139
Vortex_ICD_105              2.5        0.0155
Vortex_ICD_105              3          0.017

;Tempest Rating Curve for Vortex ICD 40, No grate allowance
Vortex_ICD_40    Rating     0          0
Vortex_ICD_40               0.1        0.0004
Vortex_ICD_40               0.2        0.0006
Vortex_ICD_40               0.3        0.0007
Vortex_ICD_40               0.4        0.0009
Vortex_ICD_40               0.5        0.001
Vortex_ICD_40               0.6        0.001
Vortex_ICD_40               0.7        0.0011
Vortex_ICD_40               0.8        0.0012
Vortex_ICD_40               0.9        0.0013
Vortex_ICD_40               1          0.0014
Vortex_ICD_40               1.2        0.0015
Vortex_ICD_40               1.4        0.0016
Vortex_ICD_40               1.6        0.0017
Vortex_ICD_40               1.8        0.0018
Vortex_ICD_40               2          0.0019
Vortex_ICD_40               2.5        0.0022
Vortex_ICD_40               3          0.0024

;Tempest Rating Curve for Vortex ICD 45, No grate allowance
Vortex_ICD_45    Rating     0          0
Vortex_ICD_45               0.1        0.0006
Vortex_ICD_45               0.2        0.0008
Vortex_ICD_45               0.3        0.001
Vortex_ICD_45               0.4        0.0011
Vortex_ICD_45               0.5        0.0013
Vortex_ICD_45               0.6        0.0014
Vortex_ICD_45               0.7        0.0015
Vortex_ICD_45               0.8        0.0016
Vortex_ICD_45               0.9        0.0017
Vortex_ICD_45               1          0.0018
Vortex_ICD_45               1.2        0.002
Vortex_ICD_45               1.4        0.0021
Vortex_ICD_45               1.6        0.0023
Vortex_ICD_45               1.8        0.0024
Vortex_ICD_45               2          0.0026
Vortex_ICD_45               2.5        0.0029
Vortex_ICD_45               3          0.0031

;Tempest Rating Curve for Vortex ICD 50, No grate allowance
Vortex_ICD_50    Rating     0          0
Vortex_ICD_50               0.1        0.0007
Vortex_ICD_50               0.2        0.001
Vortex_ICD_50               0.3        0.0012
Vortex_ICD_50               0.4        0.0014
Vortex_ICD_50               0.5        0.0016
Vortex_ICD_50               0.6        0.0018
Vortex_ICD_50               0.7        0.0019
Vortex_ICD_50               0.8        0.002
Vortex_ICD_50               0.9        0.0021
Vortex_ICD_50               1          0.0023
Vortex_ICD_50               1.2        0.0025
Vortex_ICD_50               1.4        0.0027
Vortex_ICD_50               1.6        0.0029
Vortex_ICD_50               1.8        0.003
Vortex_ICD_50               2          0.0032
Vortex_ICD_50               2.5        0.0036
Vortex_ICD_50               3          0.0039

;Tempest Rating Curve for Vortex ICD 55, No grate allowance
Vortex_ICD_55    Rating     0          0
Vortex_ICD_55               0.1        0.0009
Vortex_ICD_55               0.2        0.0012
Vortex_ICD_55               0.3        0.0015
Vortex_ICD_55               0.4        0.0017
Vortex_ICD_55               0.5        0.0019
Vortex_ICD_55               0.6        0.0021
Vortex_ICD_55               0.7        0.0023
Vortex_ICD_55               0.8        0.0024
Vortex_ICD_55               0.9        0.0026
Vortex_ICD_55               1          0.0027
Vortex_ICD_55               1.2        0.003
Vortex_ICD_55               1.4        0.0032
Vortex_ICD_55               1.6        0.0034
Vortex_ICD_55               1.8        0.0036
Vortex_ICD_55               2          0.0038
Vortex_ICD_55               2.5        0.0043
Vortex_ICD_55               3          0.0047

;Tempest Rating Curve for Vortex ICD 60, No grate allowance
Vortex_ICD_60    Rating     0          0
Vortex_ICD_60               0.1        0.0011
Vortex_ICD_60               0.2        0.0015
Vortex_ICD_60               0.3        0.0018
Vortex_ICD_60               0.4        0.0021
Vortex_ICD_60               0.5        0.0023
Vortex_ICD_60               0.6        0.0025
Vortex_ICD_60               0.7        0.0027
Vortex_ICD_60               0.8        0.0029
Vortex_ICD_60               0.9        0.0031
Vortex_ICD_60               1          0.0032
Vortex_ICD_60               1.2        0.0036
Vortex_ICD_60               1.4        0.0038
Vortex_ICD_60               1.6        0.0041
Vortex_ICD_60               1.8        0.0043
Vortex_ICD_60               2          0.0046
Vortex_ICD_60               2.5        0.0051
Vortex_ICD_60               3          0.0056

;Tempest Rating Curve for Vortex ICD 65, No grate allowance
Vortex_ICD_65    Rating     0          0
Vortex_ICD_65               0.1        0.0012
Vortex_ICD_65               0.2        0.0016
Vortex_ICD_65               0.3        0.002
Vortex_ICD_65               0.4        0.0023
Vortex_ICD_65               0.5        0.0025
Vortex_ICD_65               0.6        0.0028
Vortex_ICD_65               0.7        0.003
Vortex_ICD_65               0.8        0.0032
Vortex_ICD_65               0.9        0.0034
Vortex_ICD_65               1          0.0036
Vortex_ICD_65               1.2        0.004
Vortex_ICD_65               1.4        0.0043
Vortex_ICD_65               1.6        0.0046
Vortex_ICD_65               1.8        0.0049
Vortex_ICD_65               2          0.0051
Vortex_ICD_65               2.5        0.0057
Vortex_ICD_65               3          0.0063

;Tempest Rating Curve for Vortex ICD 70, No grate allowance
Vortex_ICD_70    Rating     0          0
Vortex_ICD_70               0.1        0.0013
Vortex_ICD_70               0.2        0.0019
Vortex_ICD_70               0.3        0.0023
Vortex_ICD_70               0.4        0.0027
Vortex_ICD_70               0.5        0.003
Vortex_ICD_70               0.6        0.0033
Vortex_ICD_70               0.7        0.0036
Vortex_ICD_70               0.8        0.0038
Vortex_ICD_70               0.9        0.0041
Vortex_ICD_70               1          0.0043
Vortex_ICD_70               1.2        0.0047
Vortex_ICD_70               1.4        0.0051
Vortex_ICD_70               1.6        0.0055
Vortex_ICD_70               1.8        0.0058
Vortex_ICD_70               2          0.0061
Vortex_ICD_70               2.5        0.0068
Vortex_ICD_70               3          0.0075

;Tempest Rating Curve for Vortex ICD 75, No grate allowance
Vortex_ICD_75    Rating     0          0
Vortex_ICD_75               0.1        0.0016
Vortex_ICD_75               0.2        0.0022
Vortex_ICD_75               0.3        0.0027
Vortex_ICD_75               0.4        0.0032
Vortex_ICD_75               0.5        0.0035
Vortex_ICD_75               0.6        0.0039
Vortex_ICD_75               0.7        0.0042
Vortex_ICD_75               0.8        0.0045
Vortex_ICD_75               0.9        0.0048
Vortex_ICD_75               1          0.005
Vortex_ICD_75               1.2        0.0055
Vortex_ICD_75               1.4        0.0059
Vortex_ICD_75               1.6        0.0063
Vortex_ICD_75               1.8        0.0067
Vortex_ICD_75               2          0.0071
Vortex_ICD_75               2.5        0.0079
Vortex_ICD_75               3          0.0087

;Tempest Rating Curve for Vortex ICD 80, No grate allowance
Vortex_ICD_80    Rating     0          0
Vortex_ICD_80               0.1        0.0018
Vortex_ICD_80               0.2        0.0026
Vortex_ICD_80               0.3        0.0031
Vortex_ICD_80               0.4        0.0036
Vortex_ICD_80               0.5        0.004
Vortex_ICD_80               0.6        0.0044
Vortex_ICD_80               0.7        0.0048
Vortex_ICD_80               0.8        0.0051
Vortex_ICD_80               0.9        0.0054
Vortex_ICD_80               1          0.0057
Vortex_ICD_80               1.2        0.0063
Vortex_ICD_80               1.4        0.0068
Vortex_ICD_80               1.6        0.0072
Vortex_ICD_80               1.8        0.0077
Vortex_ICD_80               2          0.0081
Vortex_ICD_80               2.5        0.009
Vortex_ICD_80               3          0.0099

;Tempest Rating Curve for Vortex ICD 85, No grate allowance
Vortex_ICD_85    Rating     0          0
Vortex_ICD_85               0.1        0.002
Vortex_ICD_85               0.2        0.0029
Vortex_ICD_85               0.3        0.0035
Vortex_ICD_85               0.4        0.0041
Vortex_ICD_85               0.5        0.0045
Vortex_ICD_85               0.6        0.005
Vortex_ICD_85               0.7        0.0054
Vortex_ICD_85               0.8        0.0057
```

```
Vortex_ICD_85                0.9        0.0061
Vortex_ICD_85                1          0.0064
Vortex_ICD_85                1.2        0.007
Vortex_ICD_85                1.4        0.0076
Vortex_ICD_85                1.6        0.0081
Vortex_ICD_85                1.8        0.0086
Vortex_ICD_85                2          0.0091
Vortex_ICD_85                2.5        0.0101
Vortex_ICD_85                3          0.0111

;Tempest Rating Curve for Vortex ICD 90, No grate allowance
Vortex_ICD_90    Rating      0          0
Vortex_ICD_90                0.1        0.0022
Vortex_ICD_90                0.2        0.0032
Vortex_ICD_90                0.3        0.0039
Vortex_ICD_90                0.4        0.0045
Vortex_ICD_90                0.5        0.0051
Vortex_ICD_90                0.6        0.0055
Vortex_ICD_90                0.7        0.006
Vortex_ICD_90                0.8        0.0064
Vortex_ICD_90                0.9        0.0068
Vortex_ICD_90                1          0.0072
Vortex_ICD_90                1.2        0.0079
Vortex_ICD_90                1.4        0.0085
Vortex_ICD_90                1.6        0.0091
Vortex_ICD_90                1.8        0.0096
Vortex_ICD_90                2          0.0102
Vortex_ICD_90                2.5        0.0114
Vortex_ICD_90                3          0.0125

;Tempest Rating Curve for Vortex ICD 95, No grate allowance
Vortex_ICD_95    Rating      0          0
Vortex_ICD_95                0.1        0.0026
Vortex_ICD_95                0.2        0.0036
Vortex_ICD_95                0.3        0.0044
Vortex_ICD_95                0.4        0.0051
Vortex_ICD_95                0.5        0.0057
Vortex_ICD_95                0.6        0.0062
Vortex_ICD_95                0.7        0.0067
Vortex_ICD_95                0.8        0.0071
Vortex_ICD_95                0.9        0.0076
Vortex_ICD_95                1          0.008
Vortex_ICD_95                1.2        0.0087
Vortex_ICD_95                1.4        0.0094
Vortex_ICD_95                1.6        0.0101
Vortex_ICD_95                1.8        0.0107
Vortex_ICD_95                2          0.0113
Vortex_ICD_95                2.5        0.0126
Vortex_ICD_95                3          0.0138

;From Zurn Manual RD178
ZURN_Z150F-6NH   Rating      0          0
ZURN_Z150F-6NH               0.0127     0.00503838308477861
ZURN_Z150F-6NH               0.0257     0.0132420013231177
ZURN_Z150F-6NH               0.0384     0.0234992054543888
ZURN_Z150F-6NH               0.0508     0.0357128365761305
ZURN_Z150F-6NH               0.0765     0.0425019726111045
ZURN_Z150F-6NH               0.1024     0.0433196215564931

CB120            Storage     0          0.36
CB120                        0.3        338.53

CB121            Storage     0          0.36
CB121                        0.3        292.64

CB122            Storage     0          0.073
CB122                        1.45       0.073
CB122                        1.7        74.71

CB123            Storage     0          0.36
CB123                        2.182      0.36

CB124            Storage     0          0.073
CB124                        1.58       0.073
CB124                        1.78       34.68

CB125            Storage     0          0.36
CB125                        1.65       0.36
CB125                        1.95       37.3
CB125                        2          37.3

[TIMESERIES]
;;Name           Date       Time       Value
;;-------------- ---------- ---------- ----------
;Rainfall (mm/hr)
24SCS100         01/01/2000 00:00:00   1.548
24SCS100         01/01/2000 00:15:00   1.548
24SCS100         01/01/2000 00:30:00   1.548
24SCS100         01/01/2000 00:45:00   1.548
24SCS100         01/01/2000 01:00:00   0.7224
24SCS100         01/01/2000 01:15:00   0.7224
24SCS100         01/01/2000 01:30:00   0.7224
24SCS100         01/01/2000 01:45:00   0.7224
24SCS100         01/01/2000 02:00:00   1.3416
24SCS100         01/01/2000 02:15:00   1.3416
24SCS100         01/01/2000 02:30:00   1.3416
24SCS100         01/01/2000 02:45:00   1.3416
24SCS100         01/01/2000 03:00:00   1.3416
24SCS100         01/01/2000 03:15:00   1.3416
24SCS100         01/01/2000 03:30:00   1.3416
24SCS100         01/01/2000 03:45:00   1.3416
24SCS100         01/01/2000 04:00:00   1.7544
24SCS100         01/01/2000 04:15:00   1.7544
24SCS100         01/01/2000 04:30:00   1.7544
24SCS100         01/01/2000 04:45:00   1.7544
24SCS100         01/01/2000 05:00:00   1.548
24SCS100         01/01/2000 05:15:00   1.548
24SCS100         01/01/2000 05:30:00   1.548
24SCS100         01/01/2000 05:45:00   1.548
24SCS100         01/01/2000 06:00:00   2.064
24SCS100         01/01/2000 06:15:00   2.064
24SCS100         01/01/2000 06:30:00   2.064
24SCS100         01/01/2000 06:45:00   2.064
24SCS100         01/01/2000 07:00:00   2.064
24SCS100         01/01/2000 07:15:00   2.064
24SCS100         01/01/2000 07:30:00   2.064
24SCS100         01/01/2000 07:45:00   2.064
24SCS100         01/01/2000 08:00:00   2.7864
24SCS100         01/01/2000 08:15:00   2.7864
24SCS100         01/01/2000 08:30:00   2.7864
24SCS100         01/01/2000 08:45:00   2.7864
24SCS100         01/01/2000 09:00:00   3.3024
24SCS100         01/01/2000 09:15:00   3.3024
24SCS100         01/01/2000 09:30:00   3.7152
24SCS100         01/01/2000 09:45:00   3.7152
24SCS100         01/01/2000 10:00:00   4.7472
24SCS100         01/01/2000 10:15:00   4.7472
24SCS100         01/01/2000 10:30:00   6.3984
24SCS100         01/01/2000 10:45:00   6.3984
24SCS100         01/01/2000 11:00:00   9.9072
24SCS100         01/01/2000 11:15:00   9.9072
24SCS100         01/01/2000 11:30:00   42.9312
24SCS100         01/01/2000 11:45:00   113.9328
24SCS100         01/01/2000 12:00:00   14.8608
24SCS100         01/01/2000 12:15:00   14.8608
24SCS100         01/01/2000 12:30:00   7.6368
24SCS100         01/01/2000 12:45:00   7.6368
24SCS100         01/01/2000 13:00:00   5.5728
24SCS100         01/01/2000 13:15:00   5.5728
24SCS100         01/01/2000 13:30:00   4.3344
24SCS100         01/01/2000 13:45:00   4.3344
24SCS100         01/01/2000 14:00:00   3.3024
24SCS100         01/01/2000 14:15:00   3.3024
24SCS100         01/01/2000 14:30:00   3.3024
24SCS100         01/01/2000 14:45:00   3.3024
24SCS100         01/01/2000 15:00:00   2.8896
24SCS100         01/01/2000 15:15:00   2.8896
24SCS100         01/01/2000 15:30:00   2.8896
24SCS100         01/01/2000 15:45:00   2.8896
24SCS100         01/01/2000 16:00:00   2.2704
24SCS100         01/01/2000 16:15:00   2.2704
24SCS100         01/01/2000 16:30:00   2.2704
24SCS100         01/01/2000 16:45:00   2.2704
24SCS100         01/01/2000 17:00:00   2.3736
24SCS100         01/01/2000 17:15:00   2.3736
24SCS100         01/01/2000 17:30:00   2.3736
24SCS100         01/01/2000 17:45:00   2.3736
24SCS100         01/01/2000 18:00:00   1.548
24SCS100         01/01/2000 18:15:00   1.548
24SCS100         01/01/2000 18:30:00   1.548
24SCS100         01/01/2000 18:45:00   1.548
24SCS100         01/01/2000 19:00:00   1.2384
24SCS100         01/01/2000 19:15:00   1.2384
24SCS100         01/01/2000 19:30:00   1.2384
24SCS100         01/01/2000 19:45:00   1.2384
24SCS100         01/01/2000 20:00:00   1.7544
24SCS100         01/01/2000 20:15:00   1.7544
24SCS100         01/01/2000 20:30:00   1.7544
24SCS100         01/01/2000 20:45:00   1.7544
24SCS100         01/01/2000 21:00:00   1.1352
24SCS100         01/01/2000 21:15:00   1.1352
24SCS100         01/01/2000 21:30:00   1.1352
24SCS100         01/01/2000 21:45:00   1.1352
24SCS100         01/01/2000 22:00:00   1.032
24SCS100         01/01/2000 22:15:00   1.032
24SCS100         01/01/2000 22:30:00   1.032
24SCS100         01/01/2000 22:45:00   1.032
24SCS100         01/01/2000 23:00:00   1.032
24SCS100         01/01/2000 23:15:00   1.032
24SCS100         01/01/2000 23:30:00   1.032
24SCS100         01/01/2000 23:45:00   1.032
24SCS100         01/02/2000 00:00:00   0

;Rainfall (mm/hr)
3CHI100          01/01/2000 00:00:00   5.339
3CHI100          01/01/2000 00:10:00   6.376
3CHI100          01/01/2000 00:20:00   7.977
3CHI100          01/01/2000 00:30:00   10.797
3CHI100          01/01/2000 00:40:00   17.136
3CHI100          01/01/2000 00:50:00   45.128
3CHI100          01/01/2000 01:00:00   178.107
3CHI100          01/01/2000 01:10:00   51.056
3CHI100          01/01/2000 01:20:00   26.163
3CHI100          01/01/2000 01:30:00   17.571
3CHI100          01/01/2000 01:40:00   13.277
3CHI100          01/01/2000 01:50:00   10.712
3CHI100          01/01/2000 02:00:00   9.008
3CHI100          01/01/2000 02:10:00   7.793
3CHI100          01/01/2000 02:20:00   6.883
3CHI100          01/01/2000 02:30:00   6.174
3CHI100          01/01/2000 02:40:00   5.607
3CHI100          01/01/2000 02:50:00   5.142
3CHI100          01/01/2000 03:00:00   0

;Sum of Infiltrated flow from above the garage slab calculated from Infiltration graphs for S6
multiplied by the total pervious area above the garage.
InfiltratedInflow 01/01/2000 00:01:00   0.0002955566
InfiltratedInflow 01/01/2000 00:02:00   0.0002955566
InfiltratedInflow 01/01/2000 00:03:00   0.0002955566
InfiltratedInflow 01/01/2000 00:04:00   0.0002955566
InfiltratedInflow 01/01/2000 00:05:00   0.0002955566
InfiltratedInflow 01/01/2000 00:06:00   0.0002955566
InfiltratedInflow 01/01/2000 00:07:00   0.0002955566
InfiltratedInflow 01/01/2000 00:08:00   0.0002955566
InfiltratedInflow 01/01/2000 00:09:00   0.0002955566
InfiltratedInflow 01/01/2000 00:10:00   0.0002955566
InfiltratedInflow 01/01/2000 00:11:00   0.0002955566
......
Too many data points (1440 in total).

[REPORT]
;;Reporting Options
INPUT     YES
CONTROLS   NO
SUBCATCHMENTS ALL
NODES ALL
LINKS ALL

[TAGS]
Node       St_UnGrd         Underground_Storage

[MAP]
DIMENSIONS       381503.2836      5032790.42705    381639.0324      5032880.16395
UNITS            Meters

[COORDINATES]
;;Node           X-Coord            Y-Coord
;;-------------- ------------------ ------------------
MH505            381512.619         5032853.746
OF2              381610.244         5032876.085
OF3              381513.952         5032857.477
OF4              381509.454         5032832.912
CB120            381549.093         5032844.875
CB121            381584.314         5032823.865
CB122            381627.208         5032806.966
CB123            381622.312         5032818.188
CB124            381610.986         5032839.563
CB125            381519.372         5032825.114
Roof1            381594.1           5032833.494
Roof2            381526.761         5032828.396
St_UnGrd         381520.468         5032851.542

[VERTICES]
;;Link           X-Coord            Y-Coord
;;-------------- ------------------ ------------------
BLDG_F           381587.375         5032838.9
CB121            381580.382         5032829.221
CB121            381526.869         5032841.1
CB123            381583.496         5032831.297
CB123            381530.098         5032843.407

[POLYGONS]
;;Subcatchment   X-Coord            Y-Coord
;;-------------- ------------------ ------------------
S1               381585.63          5032868.962
S1               381545.732         5032851.464
S1               381549.853         5032863.759
S1               381561.389         5032872.018
S1               381568.12          5032873.68
S1               381571.213         5032866.739
S1               381575.491         5032868.703
S1               381584.113         5032872.421
S1               381585.63          5032868.962
S10              381577.07          5032828.633
S10              381573.49          5032810.992
S10              381521.312         5032821.582
S10              381524.892         5032839.223
S10              381534.873         5032837.198
S10              381534.419         5032834.958
S10              381536.967         5032834.441
S10              381537.422         5032836.68
S10              381577.07          5032828.633
S2               381600.237         5032851.815
S2               381608.78          5032855.542
S2               381620.836         5032828.001
S2               381614.354         5032825.173
S2               381603.372         5032850.345
S2               381601.278         5032849.431
S2               381600.237         5032851.815
S3               381600.122         5032875.319
S3               381600.122         5032875.319
S3               381608.78          5032855.542
S3               381602.332         5032852.729
S3               381598.259         5032862.063
S3               381597.544         5032861.752
S3               381593.609         5032870.772
S3               381567.855         5032859.534
S3               381567.277         5032860.913
```

S3	381600.122	5032875.319
S4	381524.892	5032839.223
S4	381521.312	5032821.582
S4	381563.78	5032812.963
S4	381562.788	5032808.079
S4	381521.032	5032816.77
S4	381516.421	5032820.775
S4	381519.182	5032849.734
S4	381520.586	5032849.638
S4	381524.866	5032848.769
S4	381525.228	5032848.183
S4	381524.284	5032843.53
S4	381525.411	5032841.771
S4	381524.892	5032839.223
S5	381545.732	5032851.464
S5	381567.277	5032860.913
S5	381567.855	5032859.534
S5	381567.897	5032859.438
S5	381567.158	5032859.115
S5	381566.874	5032858.986
S5	381566.594	5032858.846
S5	381566.319	5032858.697
S5	381566.05	5032858.539
S5	381565.786	5032858.372
S5	381565.528	5032858.196
S5	381565.276	5032858.012
S5	381565.03	5032857.819
S5	381564.792	5032857.617
S5	381564.56	5032857.408
S5	381564.335	5032857.191
S5	381564.118	5032856.966
S5	381563.908	5032856.735
S5	381563.707	5032856.496
S5	381563.514	5032856.25
S5	381563.329	5032855.999
S5	381563.153	5032855.741
S5	381562.986	5032855.477
S5	381562.827	5032855.207
S5	381562.681	5032854.937
S5	381562.543	5032854.662
S5	381562.415	5032854.382
S5	381562.296	5032854.099
S5	381562.186	5032853.811
S5	381562.087	5032853.52
S5	381561.997	5032853.226
S5	381561.917	5032852.929
S5	381561.846	5032852.63
S5	381561.812	5032852.481
S5	381561.773	5032852.334
S5	381561.729	5032852.188
S5	381561.68	5032852.043
S5	381561.627	5032851.9
S5	381561.569	5032851.759
S5	381561.507	5032851.62
S5	381561.441	5032851.483
S5	381561.615	5032851.396
S5	381568.16	5032850.064
S5	381572.167	5032851.809
S5	381574.562	5032846.312
S5	381570.746	5032844.646
S5	381570.904	5032844.497
S5	381568.214	5032843.324
S5	381568.127	5032843.284
S5	381568.041	5032843.241
S5	381567.957	5032843.195
S5	381567.874	5032843.147
S5	381567.793	5032843.096
S5	381567.714	5032843.041
S5	381567.637	5032842.985
S5	381567.561	5032842.925
S5	381567.488	5032842.863
S5	381567.417	5032842.799
S5	381567.348	5032842.732
S5	381567.282	5032842.663
S5	381567.218	5032842.591
S5	381567.156	5032842.518
S5	381567.097	5032842.442
S5	381567.041	5032842.365
S5	381566.987	5032842.285
S5	381566.936	5032842.204
S5	381566.888	5032842.121
S5	381566.843	5032842.036
S5	381566.8	5032841.95
S5	381566.761	5032841.863
S5	381566.725	5032841.774
S5	381566.692	5032841.684
S5	381566.661	5032841.593
S5	381566.634	5032841.501
S5	381566.611	5032841.408
S5	381566.59	5032841.314
S5	381565.348	5032835.196
S5	381564.854	5032833.766
S5	381564.337	5032831.218
S5	381546.649	5032834.808
S5	381537.422	5032836.68
S5	381536.967	5032834.441
S5	381534.419	5032834.958
S5	381534.873	5032837.198
S5	381524.892	5032839.223
S5	381525.411	5032841.771
S5	381524.284	5032843.53
S5	381525.228	5032848.183
S5	381524.866	5032848.769
S5	381520.586	5032849.638
S5	381519.182	5032849.734
S5	381519.868	5032856.933
S5	381545.732	5032851.464
S6	381574.562	5032846.312
S6	381574.562	5032846.312
S6	381572.167	5032851.809
S6	381581.761	5032854.864
S6	381590.946	5032833.812
S6	381603.052	5032806.066
S6	381601.782	5032799.963
S6	381562.788	5032808.079
S6	381563.78	5032812.963
S6	381573.49	5032810.992
S6	381577.07	5032828.633
S6	381564.337	5032831.218
S6	381564.854	5032833.766
S6	381565.348	5032835.196
S6	381566.59	5032841.314
S6	381566.611	5032841.408
S6	381566.635	5032841.501
S6	381566.662	5032841.593
S6	381566.692	5032841.684
S6	381566.725	5032841.774
S6	381566.761	5032841.862
S6	381566.801	5032841.95
S6	381566.843	5032842.036
S6	381566.888	5032842.121
S6	381566.937	5032842.203
S6	381566.988	5032842.285
S6	381567.041	5032842.364
S6	381567.098	5032842.442
S6	381567.157	5032842.517
S6	381567.218	5032842.591
S6	381567.282	5032842.662
S6	381567.349	5032842.732
S6	381567.417	5032842.798
S6	381567.488	5032842.863
S6	381567.562	5032842.925
S6	381567.637	5032842.984
S6	381567.714	5032843.041
S6	381567.793	5032843.095
S6	381567.874	5032843.147
S6	381567.957	5032843.195
S6	381568.041	5032843.241
S6	381568.127	5032843.284
S6	381568.214	5032843.324
S6	381570.904	5032844.497
S6	381570.746	5032844.646
S6	381574.562	5032846.312
S7	381627.999	5032794.506
S7	381601.782	5032799.963
S7	381603.052	5032806.066
S7	381619.55	5032813.264
S7	381614.354	5032825.173
S7	381620.836	5032828.001
S7	381632.862	5032800.531
S7	381627.999	5032794.506
S8	381597.544	5032861.751
S8	381581.761	5032854.863
S8	381572.167	5032851.809
S8	381568.16	5032850.064
S8	381561.615	5032851.396
S8	381561.441	5032851.483
S8	381561.507	5032851.62
S8	381561.569	5032851.759
S8	381561.627	5032851.9
S8	381561.68	5032852.043
S8	381561.729	5032852.188
S8	381561.773	5032852.334
S8	381561.812	5032852.481
S8	381561.846	5032852.63
S8	381561.917	5032852.929
S8	381561.997	5032853.226
S8	381562.087	5032853.52
S8	381562.186	5032853.811
S8	381562.296	5032854.099
S8	381562.415	5032854.382
S8	381562.543	5032854.662
S8	381562.681	5032854.937
S8	381562.827	5032855.207
S8	381562.986	5032855.477
S8	381563.153	5032855.741
S8	381563.329	5032855.999
S8	381563.514	5032856.25
S8	381563.707	5032856.496
S8	381563.908	5032856.735
S8	381564.118	5032856.966
S8	381564.335	5032857.191
S8	381564.56	5032857.408
S8	381564.792	5032857.617
S8	381565.03	5032857.819
S8	381565.276	5032858.012
S8	381565.528	5032858.196
S8	381565.786	5032858.372
S8	381566.05	5032858.539
S8	381566.319	5032858.697
S8	381566.594	5032858.846
S8	381566.874	5032858.986
S8	381567.158	5032859.115
S8	381567.897	5032859.438
S8	381567.855	5032859.534
S8	381593.609	5032870.772
S8	381597.544	5032861.751
S9	381581.761	5032854.865
S9	381598.259	5032862.063
S9	381602.332	5032852.729
S9	381600.237	5032851.815
S9	381601.278	5032849.431
S9	381603.372	5032850.345
S9	381619.55	5032813.264
S9	381603.052	5032806.066
S9	381581.761	5032854.865

```
;;Storage Node   X-Coord           Y-Coord
;;-------------- ------------------ ------------------

[SYMBOLS]
;;Gage           X-Coord            Y-Coord
;;-------------- ------------------ ------------------
```

EPA STORM WATER MANAGEMENT MODEL - VERSION 5.2 (Build 5.2.4)

Element Count

Number of rain gages 2
Number of subcatchments ... 10
Number of nodes 13
Number of links 9
Number of pollutants 0
Number of land uses 0

Raingage Summary

Name	Data Source	Data Type	Recording Interval
24SCS100	24SCS100	INTENSITY	15 min.
3CHI100	3CHI100	INTENSITY	10 min.

Subcatchment Summary

Name	Area	Width	%Imperv	%Slope	Rain Gage	Outlet
S1	0.03	38.60	14.29	1.5000	24SCS100	CB120
S10	0.10	18.00	100.00	1.0000	24SCS100	Roof2
S2	0.02	38.94	11.12	2.1000	24SCS100	CB124
S3	0.02	26.02	0.00	2.0000	24SCS100	OF2
S4	0.04	163.64	3.09	1.5000	24SCS100	CB125
S5	0.09	79.85	77.46	2.0000	24SCS100	CB120
S6	0.11	105.72	17.82	2.1000	24SCS100	CB121
S7	0.05	44.22	13.68	3.3000	24SCS100	CB122
S8	0.03	11.98	95.75	5.2000	24SCS100	St_UnGrd
S9	0.10	18.00	100.00	1.0000	24SCS100	Roof1

Node Summary

Name	Type	Invert Elev.	Max. Depth	Ponded Area	External Inflow
MH505	OUTFALL	78.00	0.00	0.0	
OF2	OUTFALL	0.00	0.00	0.0	
OF3	OUTFALL	78.88	0.00	0.0	
OF4	OUTFALL	78.88	0.00	0.0	
CB120	STORAGE	82.10	0.30	0.0	
CB121	STORAGE	82.28	0.30	0.0	
CB122	STORAGE	79.35	1.70	0.0	
CB123	STORAGE	79.17	2.18	0.0	
CB124	STORAGE	79.47	1.78	0.0	
CB125	STORAGE	80.20	2.00	0.0	
Roof1	STORAGE	88.85	0.15	0.0	
Roof2	STORAGE	88.85	0.15	0.0	
St_UnGrd	STORAGE	78.00	1.00	0.0	Yes

Link Summary

Name	From Node	To Node	Type	Length	%Slope	Roughness
C1	CB124	CB123	CONDUIT	23.3	0.9862	0.0130
C2	CB122	CB123	CONDUIT	12.2	0.9965	0.0130
BLDG_E	Roof2	OF4	OUTLET			
BLDG_F	Roof1	OF3	OUTLET			
CB120	CB120	St_UnGrd	OUTLET			
CB121	CB121	St_UnGrd	OUTLET			
CB123	CB123	St_UnGrd	OUTLET			
CB125	CB125	St_UnGrd	OUTLET			
OL1	St_UnGrd	MH505	OUTLET			

Cross Section Summary

Conduit	Shape	Full Depth	Full Area	Hyd. Rad.	Max. Width	No. of Barrels	Full Flow
C1	CIRCULAR	0.25	0.05	0.06	0.25	1	0.06
C2	CIRCULAR	0.25	0.05	0.06	0.25	1	0.06

Analysis Options

Flow Units .... CMS
Process Models:
  Rainfall/Runoff .... YES
  RDII .... NO
  Snowmelt .... NO
  Groundwater .... NO
  Flow Routing .... YES
  Ponding Allowed .... NO
  Water Quality .... NO
Infiltration Method ...... HORTON
Flow Routing Method ...... DYNWAVE
Surcharge Method .... EXTRAN
Starting Date 01/01/2000 00:00:00
Ending Date 01/02/2000 00:00:00
Antecedent Dry Days 0.0
Report Time Step 00:01:00
Wet Time Step 00:05:00
Dry Time Step 00:05:00
Routing Time Step .... 5.00 sec
Variable Time Step .... YES
Maximum Trials 8
Number of Threads 1
Head Tolerance .... 0.001500 m

Runoff Quantity Continuity	Volume hectare-m	Depth mm
Total Precipitation	0.061	103.200
Evaporation Loss	0.000	0.000
Infiltration Loss	0.021	35.664
Surface Runoff	0.039	66.953
Final Storage	0.001	1.025
Continuity Error (%)	-0.429	

Flow Routing Continuity	Volume hectare-m	Volume 10^6 ltr
Dry Weather Inflow	0.000	0.000
Wet Weather Inflow	0.039	0.394
Groundwater Inflow	0.000	0.000
RDII Inflow	0.000	0.000
External Inflow	0.005	0.053
External Outflow	0.045	0.446
Flooding Loss	0.000	0.000
Evaporation Loss	0.000	0.000
Exfiltration Loss	0.000	0.000
Initial Stored Volume	0.000	0.000
Final Stored Volume	0.000	0.000
Continuity Error (%)	0.007	

Time-Step Critical Elements

None

Highest Flow Instability Indexes

All links are stable.

Most Frequent Nonconverging Nodes

Convergence obtained at all time steps.

Routing Time Step Summary

Minimum Time Step : 2.43 sec
Average Time Step : 5.00 sec
Maximum Time Step : 5.00 sec
% of Time in Steady State : 0.00
Average Iterations per Step : 2.00
% of Steps Not Converging : 0.00
Time Step Frequencies :
  5.000 - 3.155 sec : 99.99 %
  3.155 - 1.991 sec : 0.01 %
  1.991 - 1.256 sec : 0.00 %
  1.256 - 0.792 sec : 0.00 %
  0.792 - 0.500 sec : 0.00 %

Subcatchment Runoff Summary

Subcatchment	Total Precip mm	Total Runon mm	Total Evap mm	Total Infil mm	Imperv Runoff mm	Perv Runoff mm	Total Runoff mm	Total Runoff 10^6 ltr	Peak Runoff CMS	Runoff Coeff
S1	103.20	0.00	0.00	72.73	14.52	30.78	30.78	0.01	0.01	0.298
S10	103.20	0.00	0.00	0.00	101.69	0.00	101.69	0.10	0.03	0.985
S2	103.20	0.00	0.00	73.02	11.31	30.59	30.59	0.01	0.01	0.296
S3	103.20	0.00	0.00	75.55	0.00	28.27	28.27	0.01	0.01	0.274
S4	103.20	0.00	0.00	74.38	3.14	29.39	29.39	0.01	0.01	0.285
S5	103.20	0.00	0.00	16.90	78.72	6.51	85.23	0.08	0.03	0.826
S6	103.20	0.00	0.00	62.17	18.10	23.14	41.25	0.05	0.03	0.400
S7	103.20	0.00	0.00	72.76	13.90	30.77	30.77	0.02	0.01	0.298
S8	103.20	0.00	0.00	13.14	97.36	88.32	88.32	0.03	0.01	0.856
S9	103.20	0.00	0.00	0.00	101.69	0.00	101.69	0.10	0.03	0.985

Node Depth Summary

Node	Type	Average Depth Meters	Maximum Depth Meters	Maximum HGL Meters	Time of Max Occurrence days	hr:min	Reported Max Depth Meters
MH505	OUTFALL	0.00	0.00	78.00	0	00:00	0.00
OF2	OUTFALL	0.00	0.00	0.00	0	00:00	0.00
OF3	OUTFALL	0.00	0.00	78.88	0	00:00	0.00
OF4	OUTFALL	0.00	0.00	78.88	0	00:00	0.00
CB120	STORAGE	0.00	0.05	82.15	0	12:00	0.05
CB121	STORAGE	0.00	0.05	82.33	0	12:00	0.05
CB122	STORAGE	0.05	1.62	80.97	0	12:06	1.62
CB123	STORAGE	0.06	1.81	80.97	0	12:05	1.81
CB124	STORAGE	0.05	1.51	80.98	0	12:05	1.50
CB125	STORAGE	0.04	1.86	82.06	0	12:02	1.86
Roof1	STORAGE	0.02	0.06	88.91	0	13:00	0.06
Roof2	STORAGE	0.02	0.06	88.91	0	13:00	0.06
St_UnGrd	STORAGE	0.01	0.78	78.78	0	12:05	0.78

Node Inflow Summary

Node	Type	Maximum Lateral Inflow CMS	Maximum Total Inflow CMS	Time of Max Occurrence days	hr:min	Lateral Inflow Volume 10^6 ltr	Total Inflow Volume 10^6 ltr	Flow Balance Error Percent
MH505	OUTFALL	0.000	0.041	0	11:47	0	0.247	0.000
OF2	OUTFALL	0.006	0.006	0	12:00	0.00574	0.00574	0.000
OF3	OUTFALL	0.000	0.002	0	11:07	0	0.0967	0.000
OF4	OUTFALL	0.000	0.002	0	11:07	0	0.0968	0.000
CB120	STORAGE	0.036	0.036	0	12:00	0.0853	0.0853	0.000
CB121	STORAGE	0.032	0.032	0	12:00	0.0468	0.0468	0.001
CB122	STORAGE	0.014	0.015	0	11:58	0.0151	0.0152	0.025
CB123	STORAGE	0.000	0.012	0	11:56	0	0.022	0.056
CB124	STORAGE	0.006	0.007	0	11:50	0.00667	0.00677	-0.019
CB125	STORAGE	0.011	0.011	0	12:00	0.0114	0.0114	0.152
Roof1	STORAGE	0.030	0.030	0	12:00	0.0968	0.0968	-0.000
Roof2	STORAGE	0.030	0.030	0	12:00	0.0969	0.0969	-0.000
St_UnGrd	STORAGE	0.013	0.092	0	12:00	0.0815	0.247	0.000

Node Surcharge Summary

No nodes were surcharged.

****

Node Flooding Summary
****

No nodes were flooded.

****
Storage Volume Summary
****

Storage Unit	Average Volume 1000 m³	Avg Pcnt Full	Evap Pcnt Loss	Exfil Pcnt Loss	Maximum Volume 1000 m³	Max Pcnt Full	Time of Max Occurrence days hr:min	Maximum Outflow CMS
CB120	0.000	0.0	0.0	0.0	0.002	3.0	0 12:00	0.036
CB121	0.000	0.0	0.0	0.0	0.001	2.5	0 12:00	0.032
CB122	0.000	0.7	0.0	0.0	0.005	49.0	0 12:06	0.010
CB123	0.000	3.0	0.0	0.0	0.001	82.8	0 12:05	0.007
CB124	0.000	0.1	0.0	0.0	0.000	3.1	0 12:05	0.007
CB125	0.000	0.4	0.0	0.0	0.003	40.7	0 12:02	0.006
Roof1	0.010	10.0	0.0	0.0	0.039	41.2	0 13:00	0.002
Roof2	0.010	10.0	0.0	0.0	0.039	41.2	0 13:00	0.002
St_UnGrd	0.001	1.5	0.0	0.0	0.038	78.1	0 12:05	0.041

****
Outfall Loading Summary
****

Outfall Node	Flow Freq Pcnt	Avg Flow CMS	Max Flow CMS	Total Volume 10^6 ltr
MH505	99.92	0.003	0.041	0.247
OF2	3.97	0.002	0.006	0.006
OF3	94.75	0.001	0.002	0.097
OF4	94.75	0.001	0.002	0.097
System	73.35	0.007	0.051	0.446

****
Link Flow Summary
****

Link	Type	Maximum |Flow| CMS	Time of Max Occurrence days hr:min	Maximum |Veloc| m/sec	Max/ Full Flow	Max/ Full Depth
C1	CONDUIT	0.007	0 11:57	0.39	0.12	1.00
C2	CONDUIT	0.010	0 11:55	0.48	0.17	1.00
BLDG_E	DUMMY	0.002	0 11:07			
BLDG_F	DUMMY	0.002	0 11:07			
CB120	DUMMY	0.036	0 12:00			
CB121	DUMMY	0.032	0 12:00			
CB123	DUMMY	0.006	0 12:05			
CB125	DUMMY	0.006	0 12:02			
OL1	DUMMY	0.041	0 11:47			

****
Flow Classification Summary
****

Conduit	Adjusted /Actual Length	Dry	Up Dry	Down Dry	Sub Crit	Up Crit	Sup Crit	Down Crit	Norm Ltd	Inlet Ctrl
		---------- Fraction of Time in Flow Class ----------								
C1	1.00	0.48	0.00	0.00	0.06	0.00	0.00	0.46	0.01	0.00
C2	1.00	0.48	0.00	0.00	0.06	0.00	0.00	0.46	0.01	0.00

****
Conduit Surcharge Summary
****

Conduit	Hours Full Both Ends	Upstream	Dnstream	Hours Above Full Normal Flow	Hours Capacity Limited
C1	0.97	0.97	1.16	0.01	0.01
C2	1.05	1.05	1.17	0.01	0.01

Analysis begun on: Thu Sep 26 08:32:10 2024
Analysis ended on: Thu Sep 26 08:32:10 2024
Total elapsed time: < 1 sec

Engineering Specification

Job Name _____

Job Location _____

Engineer _____

Approval _____

Tag _____

Contractor _____

Approval _____

Contractor's P.O. No. _____

Representative _____

RD-200

Small Area Roof Drain

Specification

Watts RD-200 epoxy coated cast iron roof drain with flashing clamp with integral gravel stop, self-locking polyethylene dome (standard), and no hub (standard) outlet.

Pipe Sizing		
Suffix	Description	
2	2"(51) Pipe Size	☐
3	3"(76) Pipe Size	☐
4	4"(102) Pipe Size (NH Only)	☐

Outlet Type		
Suffix	Description	
NH	No Hub (MJ)	☐
P	Push On	☐
T	Threaded	☐
X	Inside Caulk	☐

Options		
Suffix	Description	
-13	Galvanized Body & Flashing Clamp	☐
-B	Sump Receiver	☐
-D	Underdeck Clamp	☐
-F	Deck Flange/Adj. Extension	☐
-GSS	Stainless Steel Ballast Guard	☐
-K	Ductile Iron Dome	☐
-K13	Galvanized Dome	☐
-K80	Aluminum Dome	☐
-K81	Rough Bronze Dome	☐
-K83	SS Mesh Covered Dome	☐
-L	Vandal Proof Dome	☐
-R	2" External Water Dam	☐
-SO	Side Outlet	☐
-W	Adjustable Internal Water Dam	☐

Optional Body Material		
Suffix	Description	
-60	PVC Body w/Socket Outlet	☐
-61	ABS Body w/Socket Outlet	☐

Deck Opening 6 1/2"(165) with Sump Receiver 8"(203)

Free Area Sq. In.
35

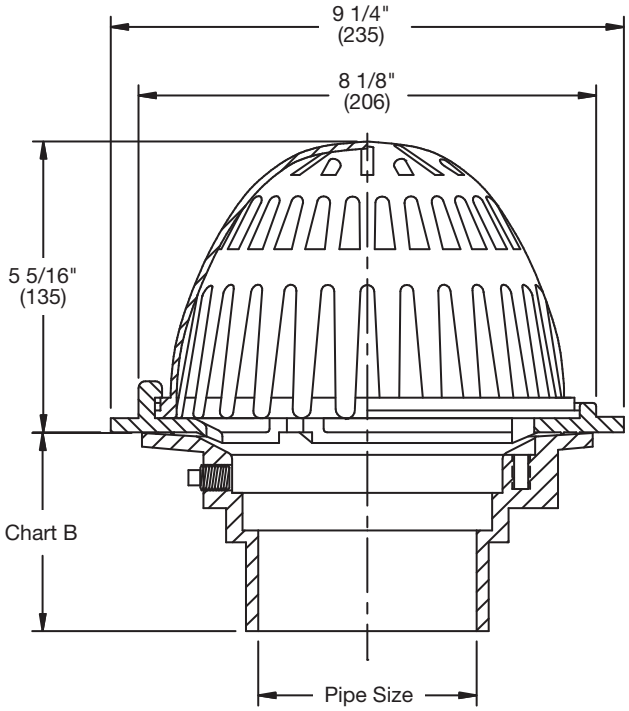

Chart B

Pipe Size	Std. No Hub	P Push On	T Female Thread	X Inside Caulk	60/61 PVC/ ABS
2"(51)	3 5/8"(92)	4 1/4"(108)	4 1/4"(108)	4 1/2"(108)	4"(102)
3"(76)	3 5/8"(92)	4 1/4"(108)	4 1/4"(108)	4 1/2"(108)	4"(102)
4"(102)	3 5/8"(92)	4 1/4"(108)	4 1/4"(108)	4 1/2"(108)	4"(102)

NOTICE

The information contained herein is not intended to replace the full product installation and safety information available or the experience of a trained product installer. You are required to thoroughly read all installation instructions and product safety information before beginning the installation of this product.

Watts product specifications in U.S. customary units and metric are approximate and are provided for reference only. For precise measurements, please contact Watts Technical Service. Watts reserves the right to change or modify product design, construction, specifications, or materials without prior notice and without incurring any obligation to make such changes and modifications on Watts products previously or subsequently sold.

USA: T: (800) 338-2581 • F: (828) 248-3929 • Watts.com
Canada: T: (888) 208-8927 • F: (905) 481-2316 • Watts.ca
Latin America: T: (52) 55-4122-0138 • Watts.com

© 2021 Watts

WATTS®	Adjustable Accutrol Weir Tag: _____	Adjustable Flow Control for Roof Drains

ADJUSTABLE ACCUTROL (for Large Sump Roof Drains only)

For more flexibility in controlling flow with heads deeper than 2", Watts Drainage offers the Adjustable Accutrol. The Adjustable Accutrol Weir is designed with a single parabolic opening that can be covered to restrict flow above 2" of head to less than 5 gpm per inch, up to 6" of head. To adjust the flow rate for depths over 2" of head, set the slot in the adjustable upper cone according to the flow rate required. Refer to Table 1 below.
Note: Flow rates are directly proportional to the amount of weir opening that is exposed.

EXAMPLE:

For example, if the adjustable upper cone is set to cover 1/2 of the weir opening, flow rates above 2"of head will be restricted to 2-1/2 gpm per inch of head.

Therefore, at 3"of head, the flow rate through the Accutrol Weir that has 1/2 the slot exposed will be:
[5 gpm (per inch of head) x 2 inches of head] + 2-1/2 gpm (for the third inch of head) = 12-1/2 gpm.

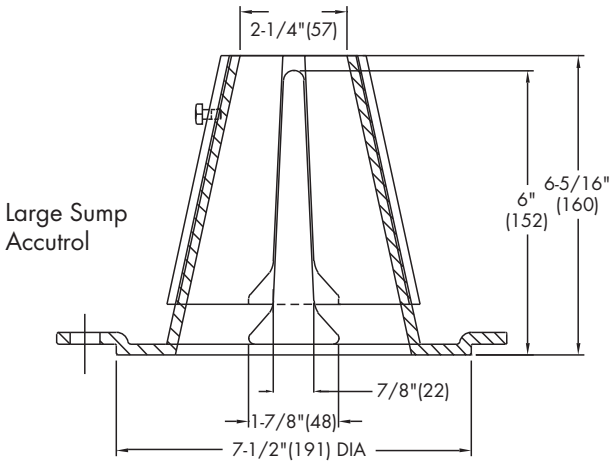

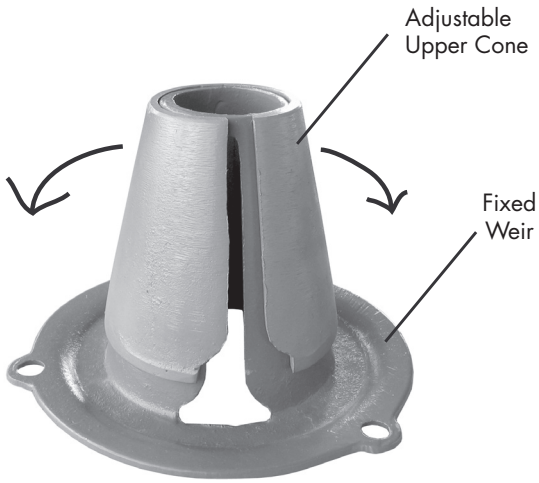

1/2 Weir Opening Exposed Shown Above

TABLE 1. Adjustable Accutrol Flow Rate Settings

Weir Opening Exposed	1"	2"	3"	4"	5"	6"
	Flow Rate (gallons per minute)					
Fully Exposed	5	10	15	20	25	30
3/4	5	10	13.75	17.5	21.25	25
1/2	5	10	12.5	15	17.5	20
1/4	5	10	11.25	12.5	13.75	15
Closed	5	5	5	5	5	5

Job Name _____ Contractor _____

Job Location _____ Contractor's P.O. No. _____

Engineer _____ Representative _____

Watts product specifications in U.S. customary units and metric are approximate and are provided for reference only. For precise measurements, please contact Watts Technical Service. Watts reserves the right to change or modify product design, construction, specifications, or materials without prior notice and without incurring any obligation to make such changes and modifications on Watts products previously or subsequently sold.

WATTS®
A Watts Water Technologies Company

USA: Tel: (800) 338-2581 • Fax: (828) 248-3929 • Watts.com
Canada: Tel: (905) 332-4090 • Fax: (905) 332-7068 • Watts.ca
Latin America: Tel: (52) 81-1001-8600 • Fax: (52) 81-8000-7091 • Watts.com

© 2016 Watts

Z150F

FLOFORCE™ HIGH PERFORMANCE PROMENADE DECK DRAIN WITH ROTATABLE FRAME AND HEEL-PROOF GRATE

SPECIFICATION SHEET

TAG _____

Design and Dimensional Data (inches and [mm]) are Subject to Manufacturing Tolerances and Change Without Notice

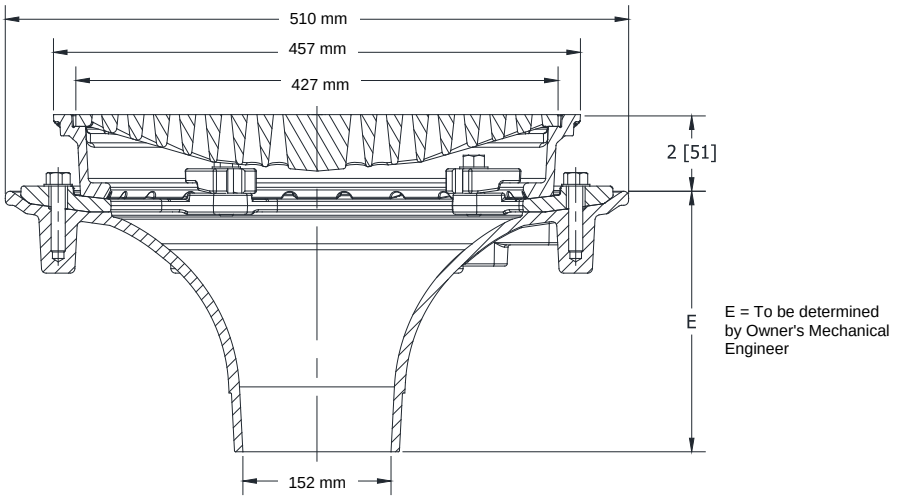

4 [102] No-Hub Illustrated

A Outlet Size In. [mm]	B Body Diameter In [mm]	C Frame Size In [mm]	D Grate Size In [mm]	Weight lbs [kg]	Grate Open Area Sq. In. [cm2]
2,3,4 [51,76,102]	16-9/16 [421]	14 [356]	12-13/16 [325]	66 [30]	44 [284]
6,8 [152, 203]	20-3/32 [510]	18 [457]	16-13/16 [427]	94 [43]	70 [452]

ENGINEERING SPECIFICATION: ZURN Z150F
FLOFORCE™ High efficient flow performing roof drain for promenade deck roof drain applications. Drain incorporates a smooth funnel-shaped interior surface, providing a seamless transition to outlet connection and eliminating internal obstructions within the body. Complete with Dura-Coated cast iron body with membrane flashing clamp, rotatable square promenade frame, seepage openings, securing clamps, and heavy-duty ductile iron heel-proof grate.

OPTIONS (Check/specify appropriate options)

PIPE SIZE	(Specify size/type)	**OUTLET**		**E BODY HT. DIM.**
2, 3, 4 [51, 76,102]	_____	NH	No-Hub	6-15/16 [176]
6, 8 [152, 203]	_____	NH	No-Hub	7-7/16 [189]
2, 3, 4 [51, 76, 102]	_____	NL	Neo-Loc	7-3/8 [187]
6 [152]	_____	NL	Neo-Loc	8-1/32 [204]
2, 3, 4 [51,76, 102]	_____	IP	Threaded	5-15/16, 6-3/16, 6-5/16 [151, 157, 160]
6, 8 [152, 203]	_____	IP	Threaded	6-11/16, 6-3/4 [170, 171]
3, 4 [76,102]	_____	IC	Inside Caulk	5-13/16 [148]
6 [152]	_____	IC	Inside Caulk	6-1/16 [154]

PREFIXES

_____ Z D.C.C.I. Body and Frame with Ductile Iron Grate*
_____ ZN D.C.C.I. Body and Frame with Ductile Iron Grate and Polished Nickel Bronze Veneer Finish

SUFFIXES

_____ -AR Acid Resistant Epoxy Coated
_____ -C Underdeck Clamp
_____ -DP Top-Set® Deck Plate (Replaces both the -C and -R)
_____ -DR Top-Set® Drain Riser
_____ -E Static Extension 1 [25] thru 4 [102] (Specify Ht.)
_____ -EA Adjustable Extension Assembly 2-1/8 [54] thru 3-1/2 [89]
_____ -G Galvanized Cast Iron
_____ -PD Low-Profile Pedestal Paver Dome
_____ -R Roof Sump Receiver
_____ -SC Secondary Clamp Collar
_____ -TC Neo-Loc Test Cap Gasket (2, 3, 4 [51, 76, 102] NL Bottom Outlet Only)
_____ -VP Vandal-Proof Secured Top
_____ -Y Type 304 [CF8] SS Sediment Bucket
_____ -85 Type 304 [CF8] Stainless Steel Perforated Extension
_____ -89 2 [51] High Overflow Dam and Low-Profile Pedestal Paver Dome

* Regularly furnished unless otherwise specified

⚠ **WARNING:** Cancer and Reproductive Harm - www.P65Warnings.ca.gov
⚠ **ADVERTENCIA:** Cáncer y daño reproductivo - www.P65Warnings.ca.gov
⚠ **AVERTISSEMENT:** Cancer et effets néfastes sur la reproduction - www.P65Warnings.ca.gov

Zurn Industries, LLC | Specification Drainage Operation
1801 Pittsburgh Avenue, Erie, PA 16502, Ph. 855.663.9876

In Canada | Zurn Industries Limited
7900 Goreway Drive, Unit 10, Brampton, Ontario L6T 5W6, Ph. 877.892.5216

www.zurn.com

Rev. -
Date: 08/08/2022
C.N. No. 144780

Appendix E

Sanitary Servicing

J.L.Richards
ENGINEERS · ARCHITECTS · PLANNERS

2983, 3053 and 3079 Navan Road and 2690 Page Road
SANITARY SEWER DESIGN SHEET
JLR NO. 29899-003

DESIGNED BY: MM/FA
CHECKED BY: KF
Date: September 2024

JLR NO. 29899-003 (NAVAN BLOCK 17)

Street Name	Pipe Reach							Commercial/Institutional				Infiltration		Peak Design Flow L/s	Pipe Data									Upstream Geometry				Downstream Geometry					Self Cleansing Velocities			
	From	To	Multiples	Apartments	Cum. Pop.	Peaking Factor	Residential Flow (L/s)	Cum. Area (ha)	Peaking Factor	Inst. Flow (L/s)	Plug Flow (L/s)	Cum. Area (ha)	Peak Extr. Flow L/s		Dia	Type	Actual Diameter	Slope	Q Full (L/s)	V Full	Length	Residual Capacity	% Full	TG From	Obvert	Invert	Cover	TG TO	Drop	Obvert	Invert	Cover	Q/Qf Ratio	Flow Depth (mm)	Actual Velocity (m/s)	Flow Depth to Dia. Ratio (d/D)
EAST ORLEANS RIDGE SUBDIVISION	UPSTREAM	03	59	226	567	3.36	6.17	0.96	1.50	0.46	3.60	4.46	1.47	**11.70**	200	Circular	203.20	0.36%	20.39	0.63	22.7	8.69	57%	82.50	80.22	80.02	2.27	82.49	0.40	80.14	79.94	2.31	0.57	110.34	0.65	0.54
BLOCK 17	BLOCK 17	04		96	173	3.54	1.98	0.00	1.50	0.00	0.00	0.55	0.18	2.16	200	Circular	203.20	1.50%	41.91	1.29	11.6	39.74	5%	82.88	80.35	80.15	2.53	82.34	0.06	80.18	79.98	2.16	0.05	31.29	0.68	0.15
BLOCK 17	04	03			173	3.54	1.98	0.00	1.50	0.00	0.00	0.55	0.18	2.16	200	Circular	203.20	1.50%	41.91	1.29	21.5	39.74	5%	82.34	80.12	79.92	2.22	82.49	0.06	79.80	79.59	2.69	0.05	31.29	0.68	0.15
EAST ORLEANS RIDGE SUBDIVISION	03	02			740	3.30	7.92	0.96	1.50	0.46	3.60	5.08	1.68	**13.66**	200	Circular	203.20	0.33%	19.75	0.61	57.9	6.09	69%	82.49	79.74	79.53	2.72	81.83	0.07	79.54	79.34	2.29	0.69	124.16	0.66	0.61

Design Parameters		
Apartments Population	1.8	Cap/Unit
Multiples (Townhouse) Population	2.7	Cap/Unit
Residential Flows	280	L/Cap/Day
Infiltration Flows	0.33	L/s/ha
Harmon's Correction Factor	0.8	unitless
Commercial Peak Factor	1.5	unitless
Institutional/Commercial Average Flow	28000	L/gross ha/d
Manning Coefficient	0.013	unitless

Notes	
Existing	Details from Existing Sewers can be found within East Orleans Ridge Subdivision Design Sheet. This information was used to verify capacities in the existing sewers.

William Rugamba

From: William Rugamba
Sent: July 22, 2024 8:18 AM
To: William Rugamba
Subject: FW: Re-confirmation of Mechanical Items for Servicing Report

William Rugamba, M.Eng., B.A.Sc., EIT
Civil Engineering Graduate
Ottawa, ON
Work: 343-804-4374

From: Sarith Lopez <slopez@qmeengineering.com>
Sent: Wednesday, July 17, 2024 8:07 PM
To: Mahad Musse <mmusse@jlrichards.ca>; Chuck Clark <CWC@qmeengineering.com>
Cc: Karla Ferrey <kferrey@jlrichards.ca>; Raad Akrawi <rakrawi@groupeheafey.com>; Carmine Zayoun <carmine@zayoungroup.com>
Subject: RE: Re-confirmation of Mechanical Items for Servicing Report

[CAUTION] This email originated from outside JLR. Do not click links or open attachments unless you recognize the sender and know the content is safe. Do not forward suspicious emails, if you are unsure, please send a separate message to Helpdesk.

Hi Mahad,

All items below confirmed

Regards

Sarith López
Project Manager

9 Gurdwara Road, Unit 200
Ottawa, ON K2E 7X6
T: 613-366-4763 ext. 129
slopez@qmeengineering.com

From: Mahad Musse <mmusse@jlrichards.ca>
Sent: Tuesday, July 16, 2024 3:08 PM
To: Sarith Lopez <slopez@qmeengineering.com>; Chuck Clark <CWC@qmeengineering.com>
Cc: Karla Ferrey <kferrey@jlrichards.ca>; Raad Akrawi <rakrawi@groupeheafey.com>; Carmine Zayoun <carmine@zayoungroup.com>
Subject: Re-confirmation of Mechanical Items for Servicing Report

Hi Sarith/Chuck,

Thank you for the information below and in our meetings. I understand all these items have been discussed before but we need to submit something as part of our report. Can you just re-confirm the following questions below and then we will attach your confirmation to the Report.

1. Please confirm that the sanitary service size of 200mm diameter for the Site Plan Blocks (Block 14, 15 and 17) is preferred by the mechanical engineer on file;

2. Please confirm that a sprinkler flow of 25 L/s can be assumed for the Site Plan Blocks (Block 14, 15 and 17) at this stage.

Thanks
Mahad

Mahad Musse, B.Eng., EIT
Civil Engineering Graduate

1000-343 Preston Street
Ottawa, ON, K1S 1N4

Work: 343-633-1501
mmusse@jlrichards.ca

BEST MANAGED COMPANIES CANADA | Platinum member

www.jlrichards.ca

Ottawa

343 Preston Street
Tower II, Suite 1000
Ottawa ON Canada
K1S 1N4
Tel: 613 728-3571
ottawa@jlrichards.ca

Kingston

203-863 Princess Street
Kingston ON Canada
K7L 5N4
Tel: 613 544-1424

kingston@jlrichards.ca

Sudbury

314 Countryside Drive
Sudbury ON Canada
P3E 6G2
Tel: 705 522-8174

sudbury@jlrichards.ca

Timmins

834 Mountjoy Street S
Timmins ON Canada
P4N 7C5
Tel: 705 360-1899

timmins@jlrichards.ca

North Bay

501-555 Oak Street E
North Bay ON Canada
P1B 8E3
Tel: 705 495-7597

northbay@jlrichards.ca

Hawkesbury

326 Bertha Street
Hawkesbury ON Canada
K6A 2A8
Tel: 613 632-0287

hawkesbury@jlrichards.ca

Guelph

107-450 Speedvale Ave. West
Guelph ON Canada
N1H 7Y6
Tel: 519 763-0713

guelph@jlrichards.ca

J.L.Richards
ENGINEERS · ARCHITECTS · PLANNERS

JLR Logo is a Registered Trademark ® 2009, all rights are reserved