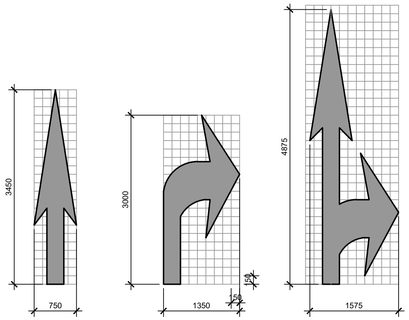

NOTES:
1. GENERAL CONTRACTOR SHALL REFER TO CHICK-FIL-A PARKING LOT STRIPING SPECIFICATIONS, SEE DETAIL
2. CONTRACTOR SHALL USE WHITE REFLECTIVE PAINT ON ASPHALT & YELLOW REFLECTIVE PAINT ON CONCRETE.

1 C9.0 DIRECTIONAL ARROWS
SCALE 1:50

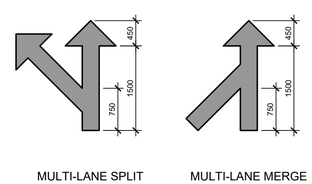

NOTES:
1. GENERAL CONTRACTOR SHALL REFER TO CHICK-FIL-A PARKING LOT STRIPING SPECIFICATIONS, SEE DETAIL
2. CONTRACTOR SHALL USE WHITE REFLECTIVE PAINT ON ASPHALT & YELLOW REFLECTIVE PAINT ON CONCRETE.

3 C9.0 MULTI–LANE DIRECTIONAL ARROWS
SCALE 1:50

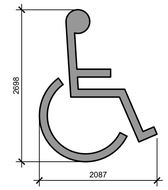

NOTES:
1. GENERAL CONTRACTOR SHALL REFER TO CHICK-FIL-A PARKING LOT STRIPING SPECIFICATIONS, SEE DETAIL
2. CONTRACTOR SHALL USE WHITE REFLECTIVE PAINT ON ASPHALT & YELLOW REFLECTIVE PAINT ON CONCRETE.

4 C9.0 ACCESSABLE SYMBOL
SCALE 1:50

PARKING LOT STRIPING SPECIFICATIONS:

STANDARDS:
1. ALWAYS FOLLOW ALL APPLICABLE GOVERNING AUTHORITY'S STANDARDS.
2. SURFACES SHOULD BE CLEAN, DRY, AND FREE FROM LOOSE OR PEELING PAINT. REMOVE ALL OIL, DUST, GREASE, DIRT, AND OTHER FOREIGN MATERIAL TO ENSURE ADEQUATE ADHESION. DO NOT APPLY WHEN AIR OR SURFACE TEMPERATURES ARE BELOW 40°F.
3. APPLY SHERWIN-WILLIAMS SETFAST PREMIUM ALKYD ZONE MARKING PAINT A300 WHITE OR A303 YELLOW USING EITHER AIRLESS OR CONVENTIONAL LINE STRIPING EQUIPMENT. USE THE FOLLOWING SETTINGS AS A GUIDE-ACTUAL SETTINGS DEPEND ON ATMOSPHERIC CONDITIONS AT THE TIME OF APPLICATION:

AIRLESS

• PRESSURE	1800-2700 PSI
• HOSE	X" ID
• TIP	0.015"-0.017"
• FILTER	60 MESH
• REDUCTION	ONLY IF NECESSARY, UP TO 1PT/GAL VM&P NAPTHA R1K3

CONVENTIONAL

• GUN	BLINKS 21 (BLEEDER) OR EQUIVALENT
• FLUID NOZZLE	#68
• AIR NOZZLE	INTERNAL MIX, #709
• ATOMIZATION PRESSURE	45-80 PSI
• FLUID PRESSURE	40-70 PSI
• REDUCTION	ONLY IF NECESSARY, UP TO 1PT/GAL VM&P NAPTHA R1K3

- SHERWIN WILLIAMS, H&C SHARK GRIP SLIP RESISTANT ADDITIVE TO BE MEASURED AND ADDED TO ALL PAINT PER MANUFACTURER'S WRITTEN SPECIFICATIONS. MIX THOROUGHLY PER MANUFACTURER'S RECOMMENDATIONS SO THAT NO CLUMPING IS APPARENT AND UNTIL EVEN DISTRIBUTION IS ACHIEVED. MAINTAIN EVEN DISTRIBUTION OF ADDITIVE IN PAINT THROUGHOUT THE APPLICATION PROCESS.
- MIX PAINT THOROUGHLY BY BOXING, STIRRING, OR POWER AGITATION BEFORE USE. APPLY AT 15 MILS WET TO ACHIEVE A SPREAD RATE OF 400-500 LINEAL FEET OF STANDARD 100mm STRIPE PER GALLON. APPLIED AT THIS RATE AT 70 DEGREES F AND 50% RELATIVE HUMIDITY, PAINT WILL DRY WITH NO TRAFFIC PICKUP AFTER 20 MINUTES.
- GENERAL CONTRACTOR TO RE-STRIPE THE LOT 45 DAYS AFTER OPENING.

4. UTILIZE 1-800 STENCIL FOR SITE PAVEMENT MARKINGS (STOP, DRIVE-THRU, EXIT, ARROWS, ETC.) 1-800-783-6245 or 1800STENCIL.COM

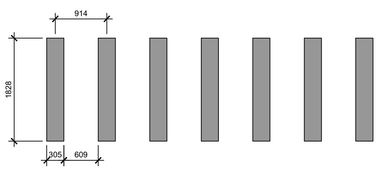

NOTES:
1. REFER TO PARKING LOT STRIPING SPECIFICATION
2. CROSSWALK ALONG AN ACCESSIBLE ROUTE SHALL MAINTAIN A CROSS SLOPE OF 1.5% MAX AND A RUNNING SLOPE OF 5% MAX.

5 C9.0 CROSSWALK DETAIL
SCALE 1:50

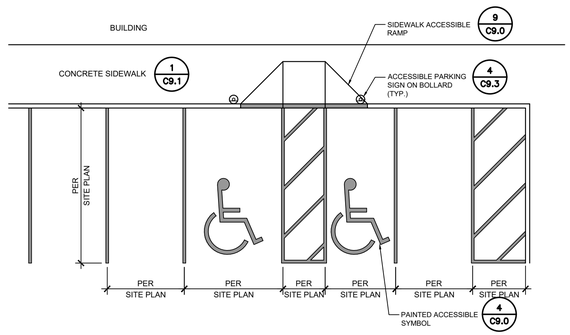

NOTES :
1. ACCESSIBLE PARKING AND ACCESSIBLE AISLES SHALL NOT EXCEED 1.5% IN SLOPE IN ANY DIRECTION. IF ONLY ONE ACCESS AISLE IS INSTALLED, IT IS TO BE A VAN SIZE.
2. PARKING STALL DIMENSIONING SHALL BE IN ACCORDANCE WITH APPLICABLE GOVERNING AUTHORITY'S AND ADA STANDARDS AND IF DIFFERENT THAN THIS DETAIL SHALL BE THE DIMENSIONING SHOWN ON THE SITE LAYOUT PLAN.
3. GENERAL CONTRACTOR SHALL REFER TO CHICK-FIL-A PARKING LOT STRIPING SPECIFICATIONS.
4. CONTRACTOR SHALL USE 100mm WIDE WHITE REFLECTIVE PAINT FOR STRIPING ON ASPHALT PARKING LOTS.
5. CONTRACTOR SHALL USE 100mm WIDE YELLOW REFLECTIVE PAINT FOR STRIPING ON CONCRETE PARKING LOTS.
6. NO WHEEL STOPS TO BE INSTALLED WHEN PARKING IS ADJACENT TO SIDEWALK.
7. ACCCESSIBLE SIGNS IN BOLLARDS AND BOLLARDS SHALL BE INSTALLED WHEN PARKING IS ADJACENT TO FLUSH CURB OR A RAMP.

7 C9.0 STANDARD PARKING LAYOUT
SCALE 1:100

JOHN SEVIGNY C.E.T.
MANAGER (A), DEVELOPMENT REVIEW EAST
PLANNING, DEVELOPMENT & BUILDING SERVICES
DEPARTMENT, CITY OF OTTAWA

APPROVED
By sevignyjo at 8:56 am, Jul 29, 2025

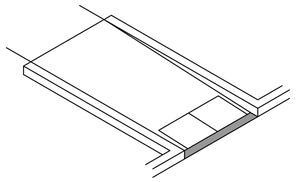

ISOMETRIC VIEW

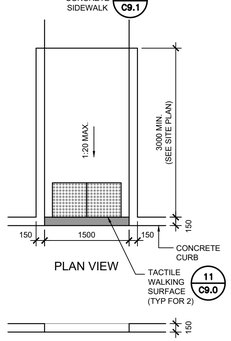

PLAN VIEW

ELEVATION

8 C9.0 DEPRESSED CURB DETAIL
SCALE 1:50

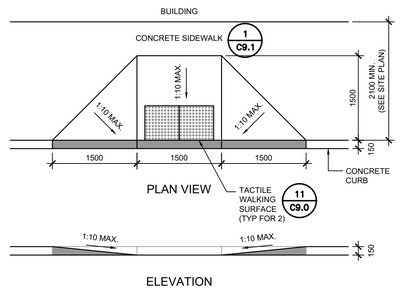

PLAN VIEW

ELEVATION

9 C9.0 CURB RAMP DETAIL
SCALE 1:50

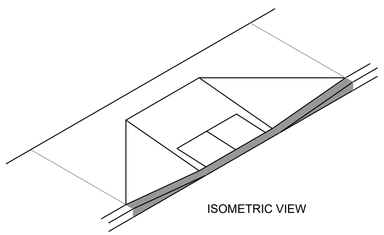

ISOMETRIC VIEW

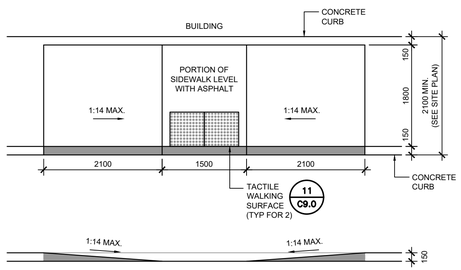

ELEVATION

10 C9.0 DEPRESSED CURB DETAIL
SCALE 1:50

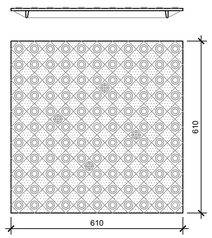

NOTES:
1. TACTILE WALKING SURFACE TO COMPLY WITH O.B.C. 3.8.3.18 AND OPSD 310.039 - "CONCRETE SIDEWALK RAMPS TACTILE WALKING SURFACE INDICATOR COMPONENTS"

11 C9.0 TACTILE WALKING SURFACE
SCALE 1:10

NOTES:
1. CURB RAMP RUNNING SLOPES SHALL NOT BE STEEPER THAN 1:14 AND CROSS SLOPE SHALL BE 1.5% OR FLATTER.
2. DETECTABLE WARNING (IF REQUIRED) SHALL BE INSTALLED AT A DEPTH OF 24" FROM THE BACK OF CURB LINE FOR THE LENGTH OF THE RAMP LANDING.
3. DETECTABLE WARNING SURFACES SHALL BE CONSTRUCTED BY TEXTURING PRODUCTS CONFORMING TO PROWAG R304. TRANSITION SLOPES ARE NOT TO HAVE DETECTABLE WARNINGS. CONTRACTOR SHALL CONFIRM LOCAL CODES ARE MET.
4. WHERE A CURB RAMP IS CONSTRUCTED WITHIN AN EXISTING CURB, CURB & GUTTER AND/OR SIDEWALK, THE EXISTING CURB & GUTTER SHALL BE REMOVED TO THE NEAREST JOINT BEYOND THE CURB TRANSITIONS OR TO THE EXTENT THAT NO REMAINING SECTION OF CURB OR CURB & GUTTER IS LESS THAN 5' LONG. THE EXISTING SIDEWALK SHALL BE REMOVED TO THE NEAREST JOINT BEYOND THE TRANSITION SLOPE WALK AROUND OR TO THE EXTENT THAT NO REMAINING SECTION OF SIDEWALK IS LESS THAN 5'.
5. THE PLAN MUST PROVIDE FOR DETECTABLE WARNING SURFACE COLORS OR MATERIALS THAT PROVIDE THE NECESSARY CONTRAST, EITHER DARK-ON-LIGHT, OR LIGHT-ON-DARK. STANDARD DOME COLOR IS BRICK RED.
6. TRUNCATED DOMES TO BE INSTALLED USING ARMOR TILE CAST IN PLACE DOME TACTILE TILE. PART NUMBER ADA-2424 OR OTHER EQUIVALENT APPROVED MATERIAL. PREFERRED MANUFACTURER ARMOR TILE TACTILE SYSTEMS LANCE MITCHELL(919)622-4615 UNLESS PAVERS ARE REQUIRED, CONTRACTOR TO VERIFY THAT CURB RAMPS MEET LOCAL CODES AND ADA REQUIREMENTS.

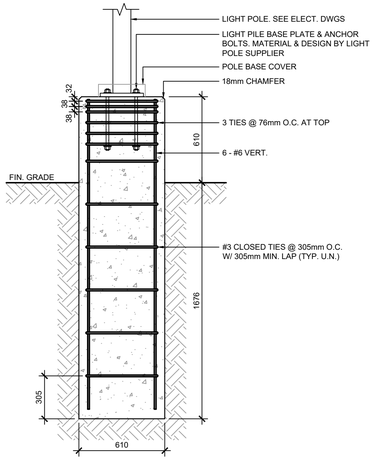

NOTES:
1. MAX. HEIGHT OF LIGHT POLE IS 7.62m ABOVE GRADE.
2. MAX HEIGHT OF CONCRETE BASE IS .61m ABOVE FINISHED GRADE.
3. MAX. EXPOSED AREA OF LIGHT FIXTURES IS 0.2 sq.m @ EACH FIXTURE.
4. MAX. 3 FIXTURES PER POLE.
5. TOTAL EXPOSED AREA OF POLE = 1 sq.m.

12 C9.0 LIGHT STANDARD BASE
SCALE 1:20

Chick-fil-A
5200 Buffington Road
Atlanta, Georgia 30349-2998

exp Services Inc.
t: +1.905.793.9800 | f: +1.905.793.0641
1595 Clark Boulevard
Brampton, ON L6T 4V1
Canada
www.exp.com

• BUILDINGS • EARTH & ENVIRONMENT • ENERGY •
• INDUSTRIAL • INFRASTRUCTURE • SUSTAINABILITY •

LICENSED PROFESSIONAL ENGINEER
M. S. KHAN
100545881
10/04/2024
PROVINCE OF ONTARIO

CHICK-FIL-A ORLEANS
4270 Innes Road
Ottawa, ON

FSR#30038

BUILDING TYPE / SIZE: iP01 SE
RELEASE: XXXXXXXXX

REVISION SCHEDULE

NO.	DATE	DESCRIPTION
A	2024-09-20	FOR SPA

Issued for SPA

CONSULTANT PROJECT #	BRM0023002042-H0
PROJECT STATUS	SPA
DATE	SEPTEMBER 2024
DRAWN BY	T.M.

Information contained on this drawing and in all digital files produced for above named project may not be reproduced in any manner without express written or verbal consent from authorized project representatives.

SHEET
GENERIC SITE DETAILS

SHEET NUMBER
C9.0

E:\BRM\BRM-23002042-H0\60 Execution\65 Drawings\23002042-H0-C9_0-RA.dwg
13 September 2024