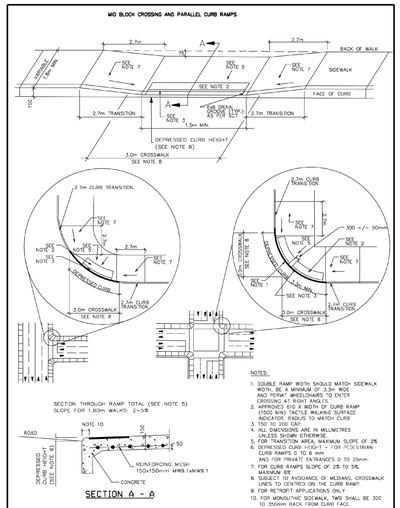

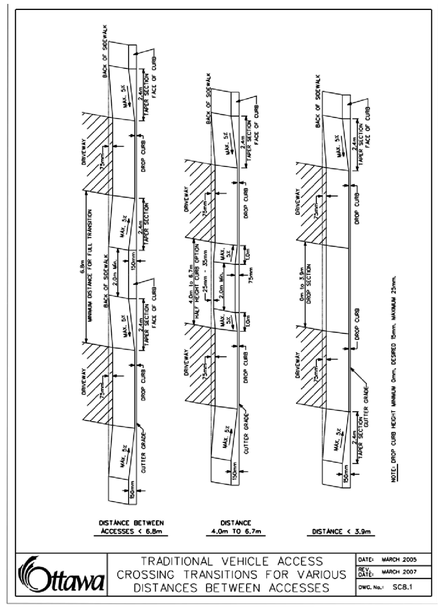

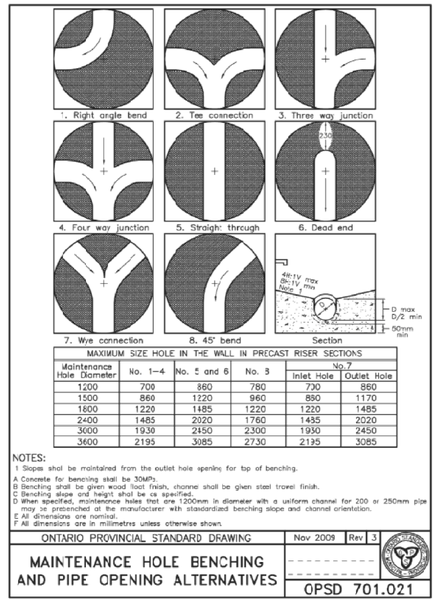

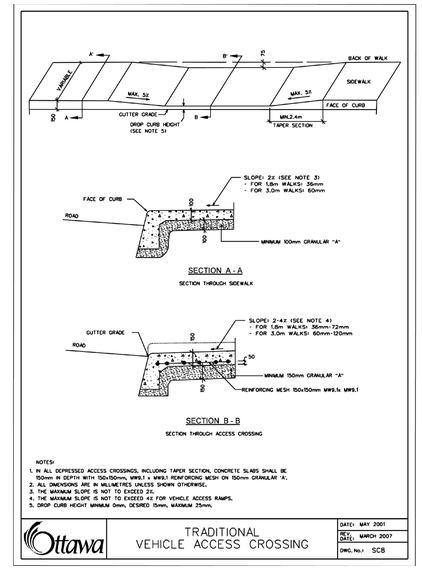

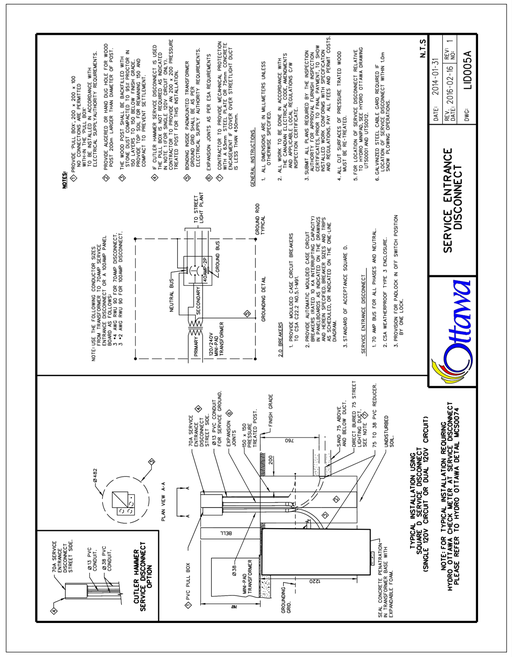

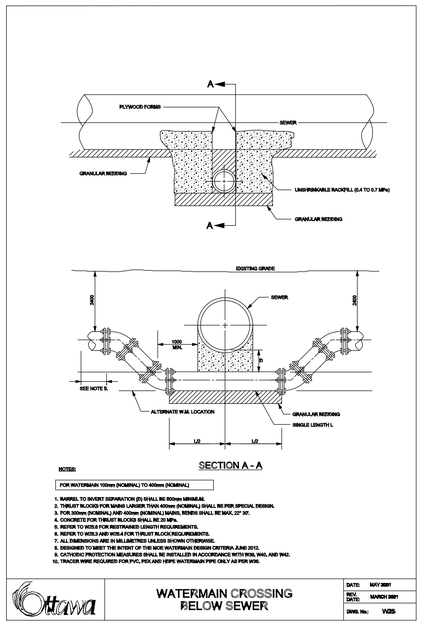

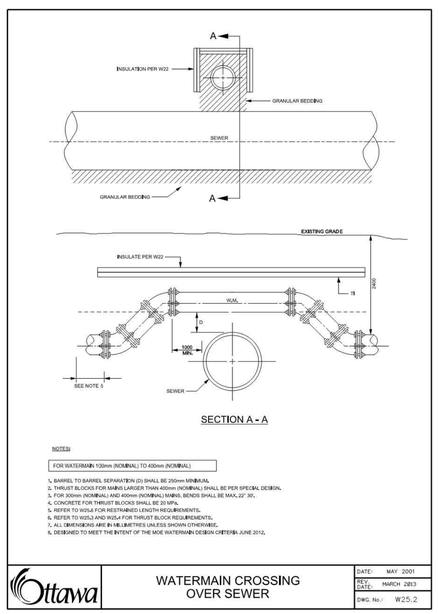

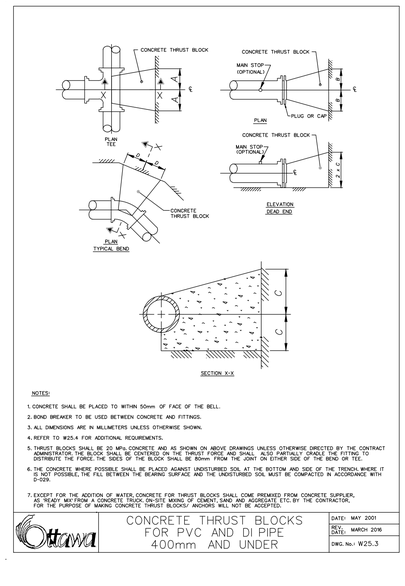

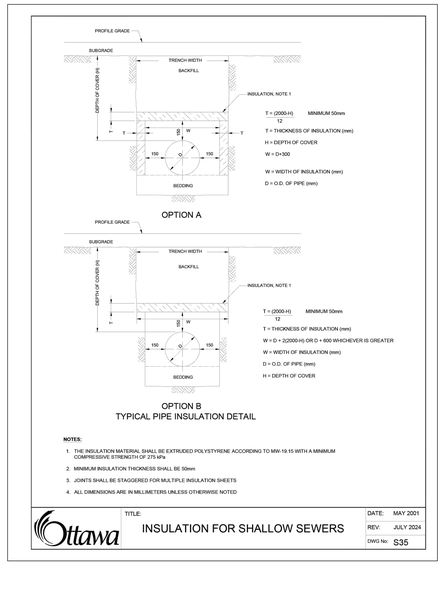

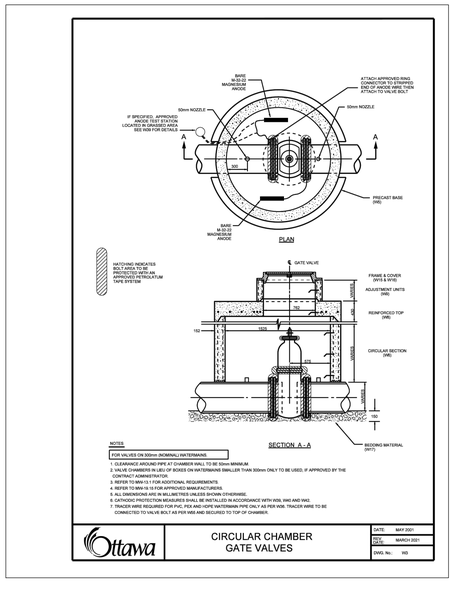

No.	REVISION	DATE	BY
3.	REVISED PER CITY COMMENTS	AUG 15/25	MS
2.	REVISED PER CITY COMMENTS	MAR 5/25	MS
1.	ISSUED FOR CITY REVIEW	NOV 1/24	BHB

SCALE: AS SHOWN

DESIGN: CV/MS
CHECKED: MS
DRAWN: CV
CHECKED: MS
APPROVED: BHB

FOR REVIEW ONLY

LICENSED PROFESSIONAL ENGINEER B. P. RUNDLE 100527529 Aug 15, 2025 PROVINCE OF ONTARIO

NOVATECH
Engineers, Planners & Landscape Architects
Suite 200, 240 Michael Cowpland Drive
Ottawa, Ontario, Canada K2M 1P6
Telephone (613) 254-9643
Facsimile (613) 254-5867
Website www.novatech-eng.com

LOCATION
CITY OF OTTAWA
THE COMMONS - PHASE 4 - MEDIUM DENSITY

DRAWING NAME
STANDARD DETAILS

PROJECT No.: 118224-MD
REV: REV # 3
DRAWING No.: 118224-MD-D2

D07-12-24-0141 #19221

M:\2018\118224\CAD\Design\Medium Density\118224-D-MD.dwg, D2, Mar 07, 2025 - 2:12pm, cvrisser

PLANA1.DWG - 841mmx594mm