PROFILE VIEW (RR1):

SCALE 1:125

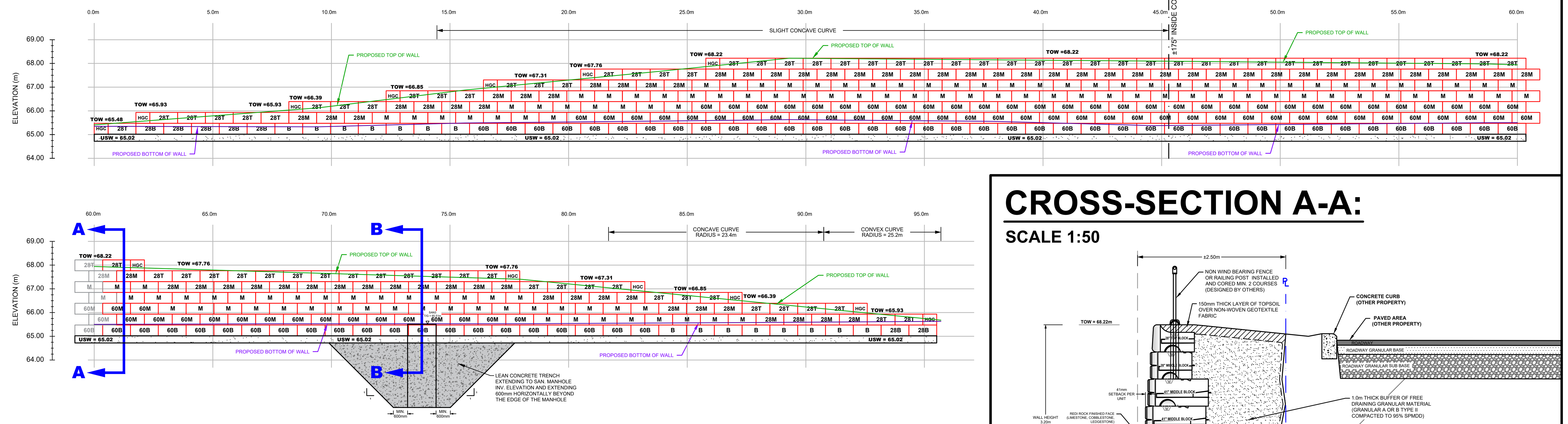

PROFILE VIEW (RR2):

SCALE 1:100

LEGEND:

BLOCKS TO BE FIELD-CUT TO FIT

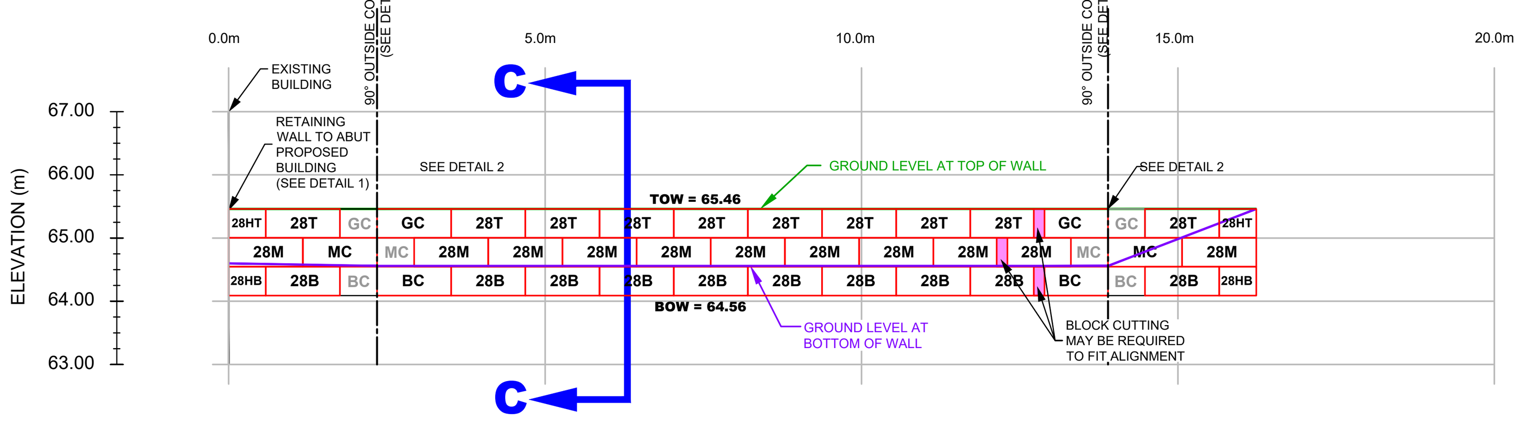

BLOCK COUNT:

N.T.S.

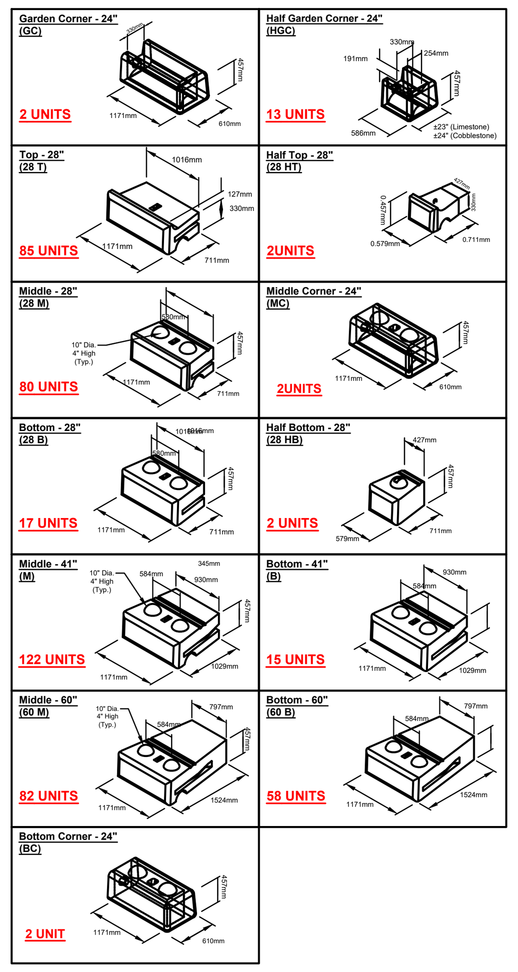

CROSS-SECTION A-A:

SCALE 1:50

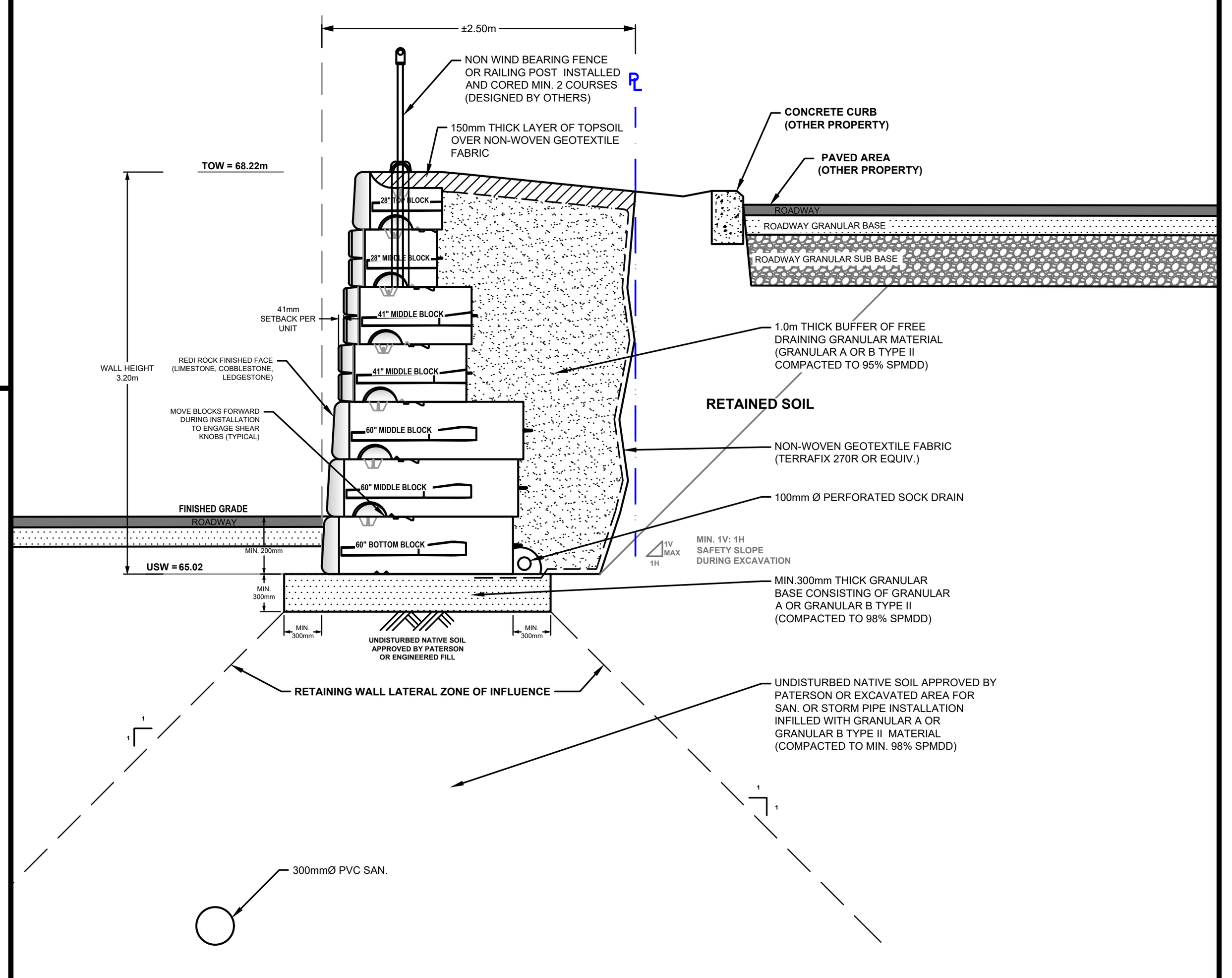

CROSS-SECTION B-B:

SCALE 1:40

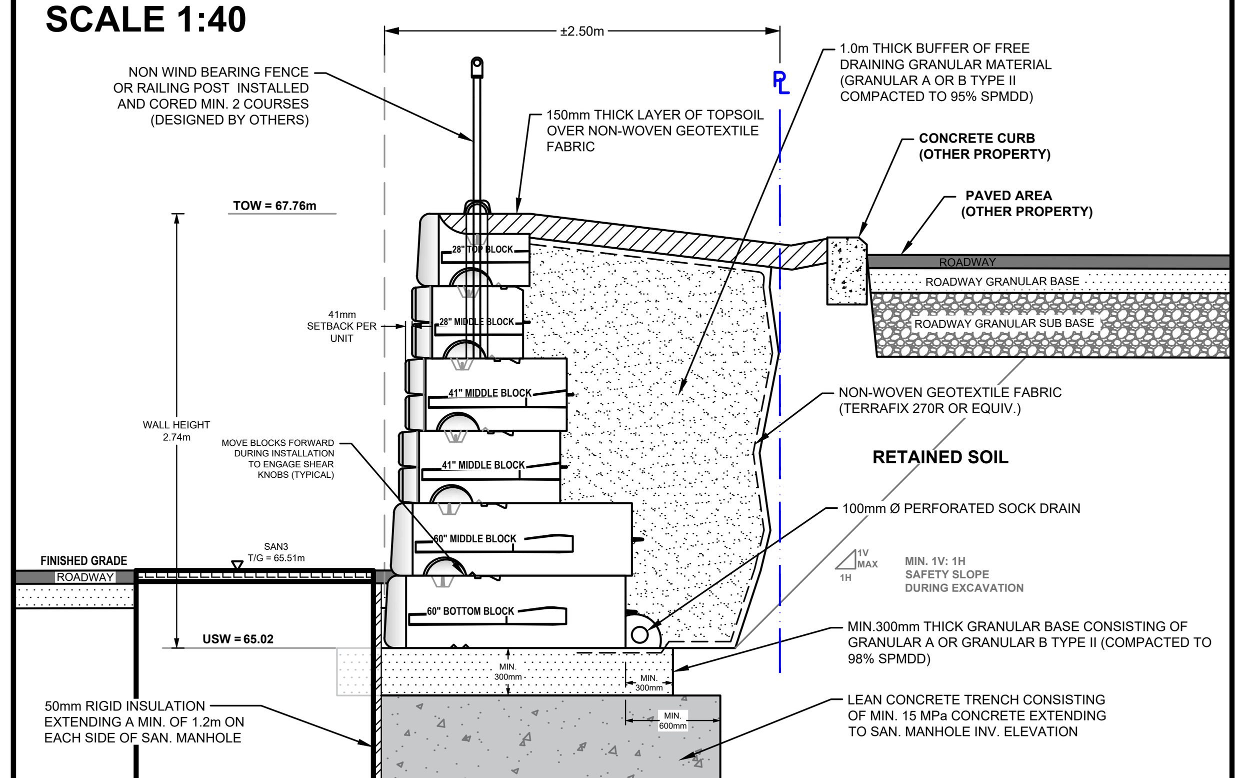

NOTES:

1. THE CONTRACTOR IS SOLELY RESPONSIBLE FOR UTILITY CLEARANCES AND CONSTRUCTION SITE SAFETY. PATERSON GROUP SHALL NOT BE RESPONSIBLE FOR MEANS OR METHODS OF CONSTRUCTION OR FOR SAFETY OF WORKERS OR OF THE PUBLIC.

APPROVED
By Kersten Nitsche at 1:19 pm, May 02, 2025

KERSTEN NITSCHE, MCIP RPP
MANAGER (A), DEVELOPMENT REVIEW WEST
PLANNING, DEVELOPMENT AND BUILDING SERVICES DEPARTMENT, CITY OF OTTAWA

2. THIS DESIGN IS BASED ON THE FOLLOWING SOIL PROPERTIES:

PROPERTY	RETAINED FILL	FOUNDATION MEDIUM
FRICTION ANGLE - ϕ	38°	35°
UNIT WEIGHT - γ	22 kN/m3	19 kN/m3
COHESION - C	0	0 kPa
SOIL TYPE	OPSS GRANULAR B TYPE II	GLACIAL TILL

MATERIAL PROPERTIES ARE BASED ON SITE EVALUATION BY PATERSON GROUP AND DISCUSSIONS WITH CONTRACTOR. SEISMIC LOADING WAS EVALUATED ACCORDING TO THE CURRENT CHBDC WITH A PEAK GROUND ACCELERATIO VALUE OF 0.269.

3. THE DESIGN ELEVATIONS USED WERE BASED ON A GRADING PLAN PROVIDED BY WINDMILL DEVELOPMENTS ON 16 JANUARY 2025, FILE NAME: ACAD-160401689-DB-export-2024-12-09-GP.dwg . THE WALL BASE DESIGN ASSUMES A BEARING RESISTANCE AT SLS OF 200 kPa ON GLACIAL TILL. PATERSON GROUP ENGINEER SHOULD OBSERVE THE BEARING CONDITIONS AND ADJUST THE THICKNESS OF THE GRANULAR BASE TO ACCOMMODATE THE SITE CONDITIONS, IF NECESSARY.

4. THE DESIGN HAS BEEN REVIEWED FOR THE STABILITY OF THE PRECAST MODULAR RETAINING WALL SYSTEM AND GLOBAL STABILITY WITH A FACTOR OF SAFETY OF 1.5 FOR STATIC CONDITIONS AND 1.1 UNDER SEISMIC CONDITIONS. WALL GEOMETRY AND GRADE ELEVATIONS ABOVE AND BELOW THE WALL SHOULD CONFORM WITH THE GRADING PLAN PROVIDED HERE IN. IF ACTUAL SITE GRADES VARY SIGNIFICANTLY FROM THOSE SHOWN OR IF THE BACK SLOPE DOES NOT CONFORM, INSTALLATION SHALL NOT PROCEED UNTIL THE DESIGN IS VERIFIED OR MODIFIED IN THE APPLICABLE AREA.

5. PRECAST UNITS SHALL BE REDI-ROCK RETAINING WALL UNITS MANUFACTURED UNDER LICENSE FROM REDI-ROCK.

6. THE WALL BASE FOR THE WALL SHALL CONSIST OF A MIN. 300mm THICK OPSS GRANULAR A COMPACTED TO MIN. 98% OF THE MATERIALS SPMDD AND TESTED BY PATERSONGROUP GEOTECHNICAL PERSONNEL AT THE TIME OF CONSTRUCTION. SURFACE OF GRANULAR BASE MAY BE DRESSED WITH FINER AGGREGATE TO AID LEVELING. ENSURE GRADATION OF DRESSING MATERIAL IS SUCH AS TO PRECLUDE LOSS OF FINES INTO BASE. THE THICKNESS OF DRESSING LAYER SHOULD NOT EXCEED 3 TIMES THE MAXIMUM PARTICLE SIZE USED.

7. WALL IS DESIGNED WITH A MIN. 200mm TOE EMBEDMENT WITH A MIN. HORIZONTAL LEDGE WITH A GRANULAR BEDDING LAYER EXTENDING A MIN. 300mm BEYOND THE FACE AND HEEL OF THE BASE BLOCK

8. INSTALL 100mm DIAMETER PERFORATED PIPE WRAPPED WITH A GEOSOCK DRAIN BEHIND HEEL OR UNDER THE WALL. PROVIDE CLEAR STONE SURROUND TO PROTECT PIPE FROM CLOGGING AND DAMAGE. PROVIDE OUTLETS THROUGH WALL, NO FURTHER APART THAN 15.0m ON CENTRES. THE DRAINAGE PIPE SHOULD BE CONNECTED TO A POSITIVE OUTLET ON BOTH ENDS OF THE RETAINING WALL SUCH AS AN EXISTING DITCH OR CATCH BASIN. THE CIVIL OR DRAINAGE DESIGNER SHOULD COORDINATE FOR PIPE CONNECTIONS.

9. THE CONDITIONS WILL BE EVALUATED BY THE GEOTECHNICAL ENGINEER DURING PREPARATION FOR WALL CONSTRUCTION IN EACH AREA. WHERE GRANULAR BEDDING WILL NOT BE SUFFICIENT THE USE OF CONCRETE BEDDING MAY BE REQUIRED.

10. ALIGNMENT OF THE BOTTOM WALL UNIT COURSE SHOULD BE PLANNED TO CONSIDER THAT A NOMINAL 41mm AUTOMATIC SETBACK WILL OCCUR WITH EACH 0.46m INCREMENT OF HEIGHT.

11. BACKFILL MATERIAL SHALL BE APPROVED BY THE SITE GEOTECHNICAL ENGINEER PRIOR TO USE AND SHOULD CONSIST OF OPSS GRANULAR A OR B TYPE II FOLLOWED BY SUITABLE BACKFILL MATERIAL. ALL FILL WITHIN A 1H:1V ZONE UP AND BACK FROM THE HEEL SHOULD ALSO BE COMPACTED. BACKFILL SHALL BE PLACED IN MAXIMUM 300mm LOOSE LIFTS AND COMPACTED TO A MINIMUM OF 95% OF SPMDD. MOISTURE CONTENT SHOULD BE CONTROLLED AND MAINTAINED WITHIN -3 TO +4 PERCENT OF OPTIMUM.

12. MAINTAIN TEMPORARY GRADES TO DIVERT SURFACE WATER AWAY FROM THE RETAINING WALL EXCAVATION. SLOPE FINAL BACKFILL TO PROVIDE POSITIVE DRAINAGE AND TO ELIMINATE PONDING.

13. BACKSLOPE SHOULD BE CUT BACK TO A MINIMUM OF 2H:1V TO 3H:1V TO MAINTAIN A LONG TERM SAFE SLOPE BEHIND THE RETAINING WALL. IT SHOULD BE NOTED THAT WHERE TREES ARE PRESENT WITHIN THE TOP OF SLOPE. A MINIMUM 1.0m SET BACK IS REQUIRED FOR EXCAVATION FROM THE EDGE OF THE TREE LINE WHERE PRESENT.

14. EXCAVATION SIDE SLOPES SHOULD BE PROTECTED TEMPORARILY DURING CONSTRUCTION FROM PRECIPITATION EVENTS BY PLACEMENT OF TARPS.

15. ALL RETAINING WALL RELATED INSPECTIONS (BEARING SURFACE, COMPACTION, BLOCK INSTALLATION, ETC.) MUST BE COMPLETED BY PATERSON GROUP. ONCE THE WALL CONSTRUCTION IS COMPLETED AND REVIEWED BY PATERSON DURING CONSTRUCTION, A CERTIFICATE LETTER WILL BE ISSUED BY PATERSON GROUP.

16. ANY CUTTING OF BLOCKS TO SUIT SITE CONDITIONS OR WALL DESIGN WILL BE RESPONSIBILITY OF THE CONTRACTOR.

17. IF WINTER CONSTRUCTION IS CONSIDERED, HEAT MUST BE MAINTAINED WHEN THE BASE IS EXPOSED. THE WALL BASE MUST COVERED WITH HIGH GRADE INSULATION TARPS TO MAINTAIN HEAT AND PROTECT THE BASE FROM POTENTIAL FROST HEAVE. ONCE THE BASE IS BACKFILLED, THE TOP OF THE WALL MUST BE COVERED WITH INSULATION TARPS OVERNIGHT UNTIL THE WALL CONSTRUCTION IS COMPLETED. ADDITIONAL INSPECTIONS WILL BE REQUIRED DURING WINTER CONSTRUCTION TO ENSURE THE WALL CONSTRUCTION IS IN GENERAL CONFORMANCE WITH PATERSON'S RECOMMENDATIONS.

18. LEVELING OF THE BASE COURSE BLOCKS IS CRITICAL TO PROPER CONSTRUCTION OF THE WALL. THE USE OF SHIMS TO LEVEL THE BLOCKS IS NOT PERMITTED UNLESS REVIEWED ON SITE PRIOR TO THEIR USE. SHOULD SHIMS BE APPROVED FOR USE BY PATERSON, THE SPECIFICATIONS AND DETAILS OF THE SHIMS USED TO SUPPORT THE BLOCKS SHOULD BE PROVIDED TO PATERSON'S DESIGNER TO CONFIRM THAT NO LONG-TERM ISSUES MAY OCCUR AS A RESULT OF THE USE OF NON-SUITABLE SHIMS IN RELATION TO THE LOAD EXPECTED FROM THE BLOCKS ABOVE.

19. THE CONTRACTOR SHOULD REFER TO THE INSTALLATION MANUAL PROVIDED FOR THE RETAINING WALL BLOCK TYPE PROVIDED HEREIN FOR ADDITIONAL DETAILS ON ACCEPTABLE INSTALLATION PRACTICES.

ISSUED FOR REVIEW

GRADING PLAN:

SCALE 1:200

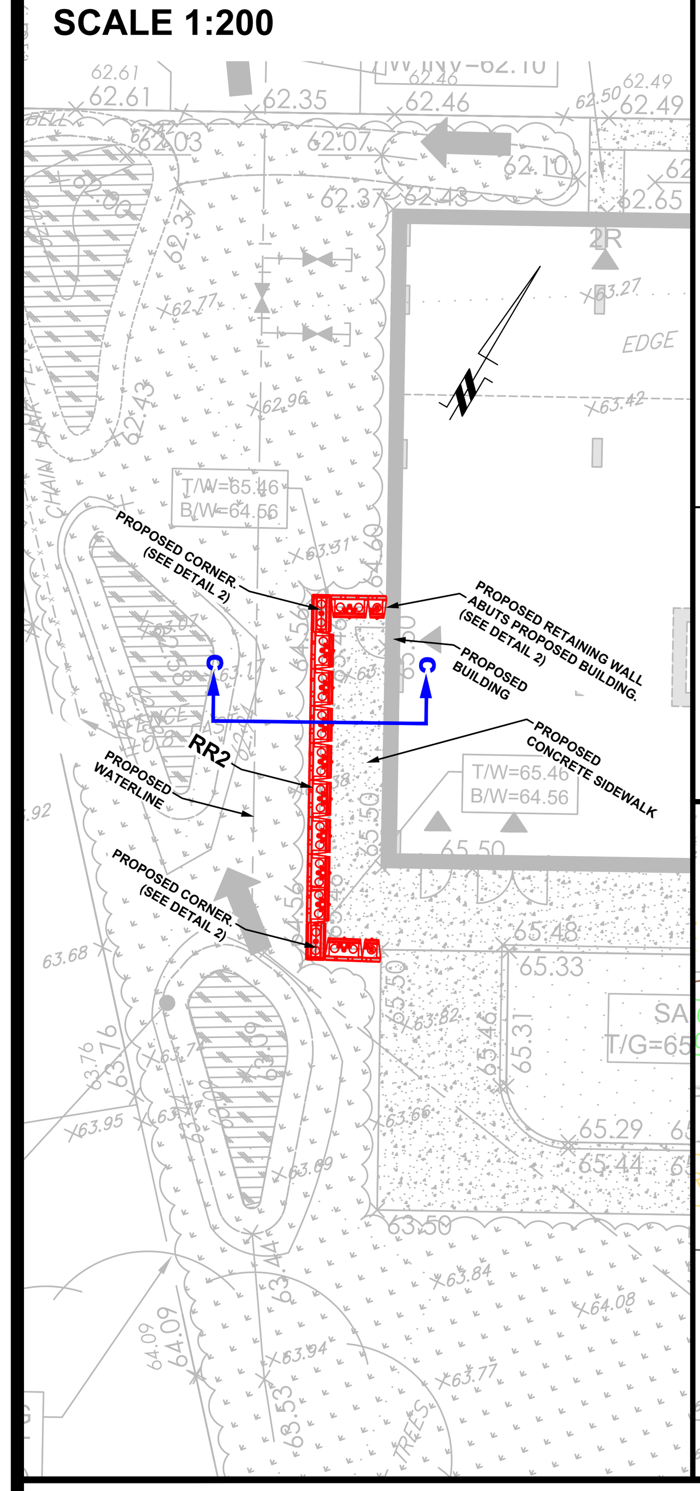

CROSS-SECTION C-C:

SCALE 1:25

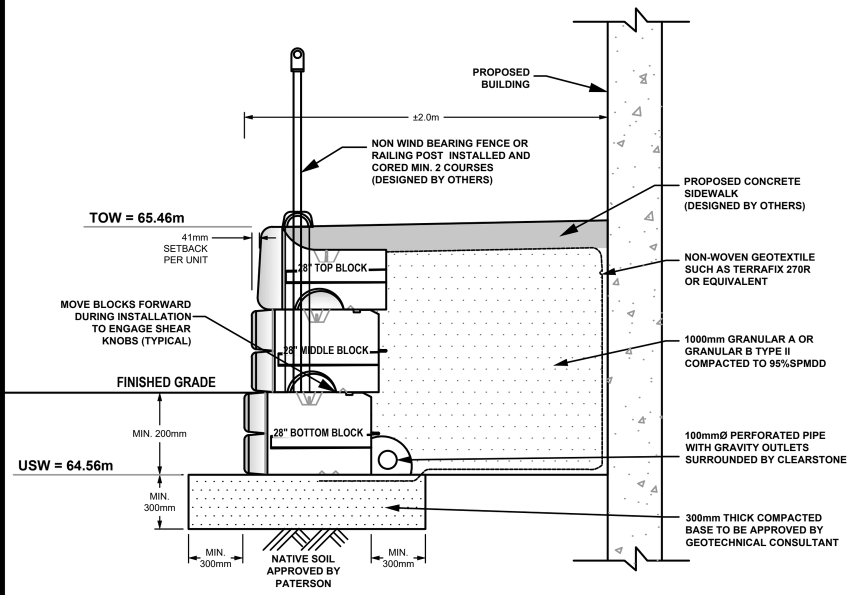

GRADING PLAN:

SCALE 1:250

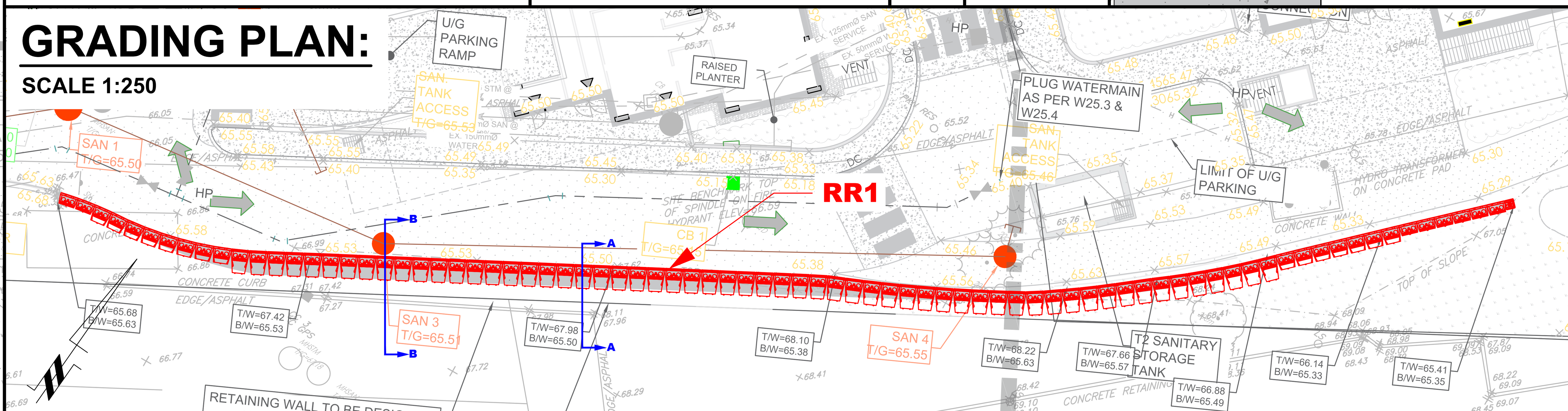

DETAIL 1:

N.T.S.

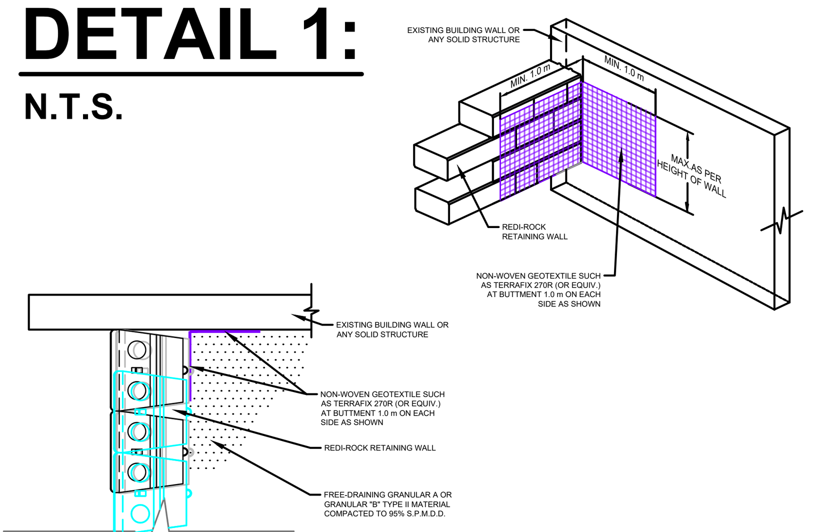

DETAIL 2:

N.T.S.

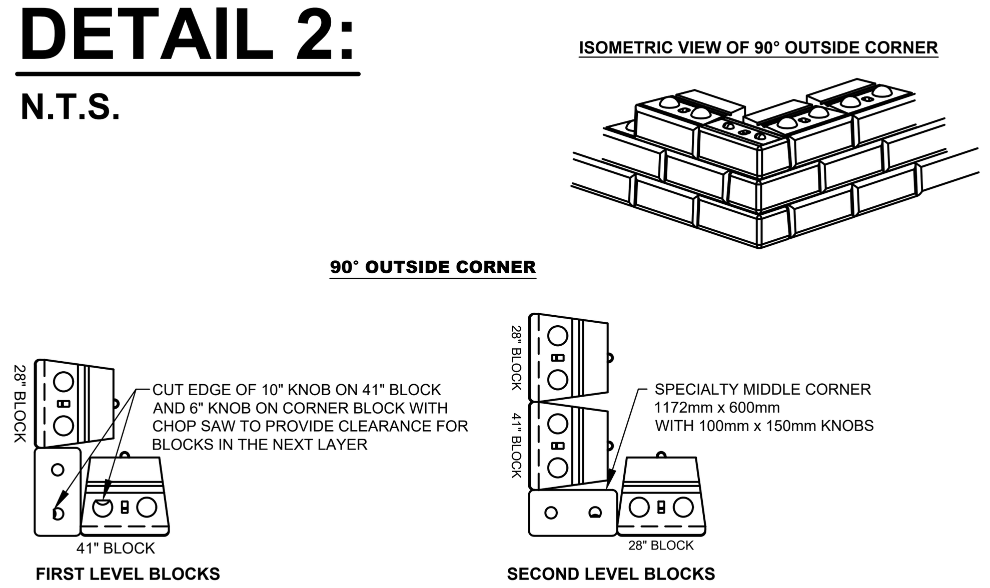

PATERSON GROUP
9 AURIGA DRIVE
OTTAWA, ON
K2E 7T9
TEL: (613) 226-7381

THIS DRAWING IS THE PROPERTY OF THE PATERSON GROUP ENTITY IDENTIFIED IN THE TITLE BLOCK AND MAY NOT BE REUSED OR ALTERED IN WHOLE OR IN PART WITHOUT THE EXPRESS WRITTEN PERMISSION OF SAME

NO.	REVISIONS	DATE	INITIAL
1	AS PER UPDATED GRADING PLAN	30/01/2025	JV

WINDMILL DEVELOPMENTS

PROPOSED RETAINING WALL
2475 REGINA STREET

OTTAWA, ONTARIO

Title: **REDI-ROCK RETAINING WALL DESIGN (RR1 & RR2)**

Stamp:

Stamp:

Scale:	AS SHOWN
Drawn by:	MB
Checked by:	CT
Approved by:	JV
Date:	05/2024
File No.:	PG5901
Drawing No.:	PG5901-2
Revision No.:	1

p:\autocad drawings\geotechnical\pg59xx\pg5901\pg5901-2 (rr1-rr2) rev.1.dwg