Site Servicing & Stormwater Management Report

Gas Station & Convenience Store

1660 Merivale Road

Ottawa, Ontario

Table of Contents

1.0 INTRODUCTION 1
2.0 PURPOSE 2
3.0 EXISTING CONDITIONS 2
4.0 PROPOSED DEVELOPMENT 3
5.0 STORMWATER MANAGEMENT PLAN 3
5.1 Pre-Development Conditions 3
5.2 Post-Development Conditions 4
5.2.1 100-year Site Storage Requirements 4
6.0 STORM SEWERS AND SWM SYSTEM 5
6.1 Storm Sewers 5
6.2 SWM System 5
7.0 SANITARY SEWER 5
8.0 WATER SERVICING 6
9.0 EROSION AND SEDIMENT CONTROL DURING CONSTRUCTION 8
10.0 CONCLUSIONS 9

List of Appendices

Appendix A | Stormwater Management Calculations
Appendix B | Storm and Sanitary Sewer Computation Forms
Appendix C | Sanitary Load and Fire Flow
Appendix D | Stormwater Storage Closed Pipe System Specifications
Appendix E | Stormceptor Design and Specifications
Appendix F | City Correspondence
Appendix G | WaterCAD Analysis
Appendix H | CCTV of Site Sanitary Sewer
Appendix I | Flow Control Roof Drainage Declaration

List of Tables

Table 1 - Water Level 2
Table 2 - ICD Schedule 5
Table 3 - Boundary Conditions 6
Table 4 - Building Water Demands and Fire Flow 7
Table 5 - Residual Pressures Under Each Demand & Different HGL 7

List of Figures

Figure 1 - Site Location 1
Figure 2 - Fire Hydrant Location 8

Drawings

Drawing C101 | Erosion/Sediment Control & Removals Plan
Drawing C102 | Site Servicing Plan
Drawing C103 | Grading Plan
Drawing C104 | Detail
Drawing C105 | Pre-Development Drainage Plan
Drawing C106 | Post-Development Drainage Plan

1.0 INTRODUCTION

Parsons Inc. was retained by Harnois Énergies to provide engineering services for the renovation of an existing gas station & convenience store located at 1660 Merivale Road in Ottawa, Ontario.

The site encompasses a total area of 0.66ha and is bordered by Merivale Road to the northeast, Viewmont Drive to the northwest with entrance on both streets. The property is also surrounded by residential houses to the southeast and southwest of its property line. The existing site from a satellite view is shown in **Figure 1**.

The proposed development includes the demolition of the existing convenience store, pump island and fuel storage tanks. The existing car wash will remain at the same location, while a new building will be located further southwest on the property. The new building will be a convenience store including a seating area. The new six pump island and underground fuel tank will be located near the existing convenience store. Servicing of the buildings will be provided by the new on-site storm sewers, sanitary services, and new water services from the existing car wash.

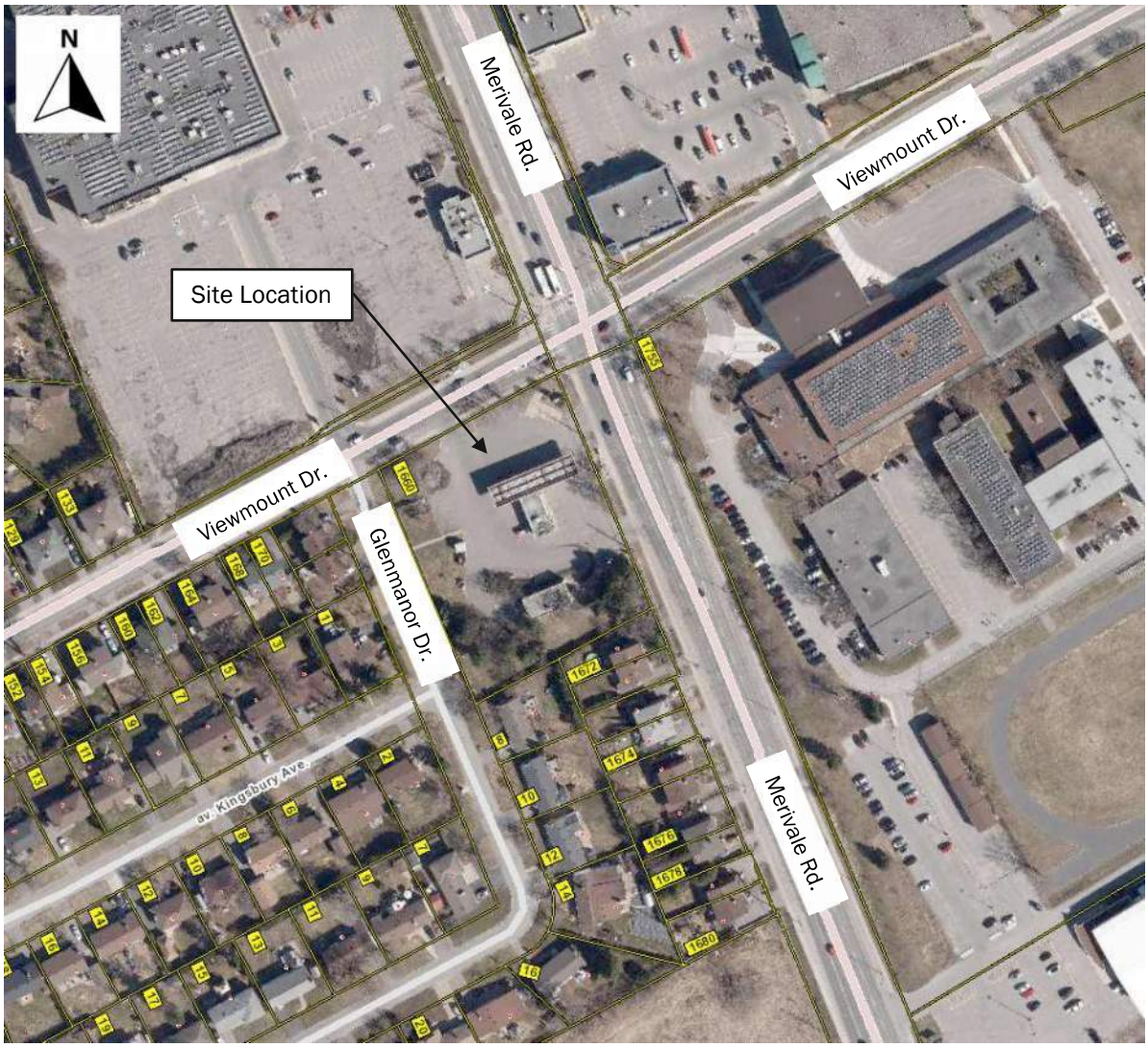

Figure 1 - Site Location

2.0 PURPOSE

This report summarizes the proposed site servicing, grading, and drainage design, documents the proposed method of attenuating stormwater runoff from the subject site, and deals with erosion and sediment control measures to be undertaken during construction.

Stormwater management items addressed includes the following:

- establishing the allowable post-development release rate from the site;
- calculating the post-development runoff from the site;
- determining the required on-site stormwater storage volume and storage areas.

3.0 EXISTING CONDITIONS

The subject site is currently occupied with an existing gas pumping station, car wash and convenience store. The purpose of this development from the new ownership group Harnois Énergie is to upgrade the existing convenience store on the property. There is currently three access on site with two on Merivale Rd. and one from Viewmount Dr.

According to the City of Ottawa, there was no as-built or archival information available for the water service location at 1660 Merivale Ave. However, a site inspection conducted on June 12th, 2024, with Clean Water Works Inc., revealed a 50mmØ copper water service line extending from the existing car wash to a curb stop water valve near Merivale Road, in between the two entrances. This discovery confirmed that a water service connection from the 152 mm watermain on Merivale Road serves both the existing car wash and the convenience store with only one water meter located in the car wash. The existing convenience store is then serviced from the car wash where the meter is located.

Despite the absence of a sanitary manhole on the property, two distinct pipes from the car wash and convenience store converge and connect to the city's main sanitary sewer pipe on Merivale Rd. A CCTV pipe inspection conducted by Clean Water Works on July 7th, 2024, confirmed that the system is directly connected to MHSA20010 on Merivale Rd. The inspection showed that the existing sanitary service PVC pipe of 200mmØ is in good condition up to the future property line. Refer to the report in **Appendix H** for more details.

The site also has catch basin and storm sewer manholes on site that captures some of the water from impervious area. There is currently no existing stormwater management on site and all the water captured is outlet from the site through a PVC 300mmØ pipe connected directly into the city's 900mmØ concrete pipe on Glenmanor Drive. Refer to **Drawing C102** for more details.

According to the geotechnical investigation report by SCP Geotek dated Mai 2023 (ref #9171), All three boreholes completed into the travel lane on site consisted of 80mm thick asphalt mixtures with a compacted granular base of 170mm. As per the four boreholes, the site appears to be backfilled from a depth of 0.05m (for grass) or 0.25m (for asphalt) to 2.5m deep with granular silty sand with traces of clay and gravel. Under the backfill layer, two boreholes found the bedrock immediately after and two other boreholes hit a dense glacial till deposit before hitting solid bedrock. The bedrock elevation was determined at borehole 2,3 and 4 at an elevation of 82.85m, 84.73m and 83.53m. Also, the on-site groundwater table was measured on March 28th, 2023, in two wells on site (F01 & F03) and the measures below were monitored.

Table 1 - Water Level

Well	Surface Elevation	Underground Water Level	
		Depth (m)	Elevation (m)
2023F01	87.12	2.65	84.47
2023F03	87.17	2.93	84.24

4.0 PROPOSED DEVELOPMENT

As shown on the Architectural Site Plan, the proposed development involves keeping the existing car wash building of 107m^2 with a finished floor elevation of 86.87m. The building will consist of a convenience store of 251m^2, a a restaurant of 214m^2 and a common Mechanical and Water Closet area of 56m^2 for a total building square footage of 521m^2 at a finished floor elevation of 87.25m. Each building is higher than the estimated groundwater table elevation. The proposal will also include modifications to parking spaces, concrete sidewalks, concrete curbs, underground fuel tank and fuel servicing station as well as the canopy. All three existing access to site will be kept with slight modifications to accommodate new fueling truck route. As requested by the City of Ottawa, a portion of the existing property facing Viewmount Dr. & Merivale Rd. will be expropriated for a future Merivale Rd. widening. The existing site area of 0.66ha will therefore be reduced to approximately 0.62ha.

5.0 STORMWATER MANAGEMENT PLAN

Drawing C106, appended to this report, depict the boundaries of the post-development drainage areas, and should be read in conjunction with this report.

The design approach for the stormwater management is to ensure that the post-development peak flows do not exceed the allowable release rate to mitigate the risk of flooding and against erosion. The City of Ottawa indicated that the allowable release rate for this site is to control the 100-year event post-development flows to the 2-year event pre-development flow. Correspondence with the City can be found in **Appendix F.**

The allowable release rate was calculated based on the following:

- Drainage Area (A) = 0.66 ha
- Runoff Coefficient (C) = 0.50
    - Existing average runoff coefficient was calculated to be 0.69.
- Time of Concentration (Tc) = 10min
    - TC was calculated with the airport method equations and the average results was 4.04min. Per City Guidelines a minimum of 10min will be used.

The Rational Method formula has been used to calculate stormwater runoff and rainfall data is based on the IDF curve equations from the *Ottawa Sewer Design Guidelines, Second Edition, October 2012.*

Q = 2.78 CIA, where:
Q = Flow rate (L/s)
C = Runoff coefficient
I = Rainfall intensity (mm/hr)
A = Area (ha)

Rainfall intensity: $I_2 = 732.951 / (Tc + 6.199)^{0.810}$

Using the Rational Method formula and the above parameters, the allowable post-development release rate for this site is **44.3 L/s**. The existing watersheds EWS-01, EWS-02, EWS-03 were exclude for the release rate calculation since they are currently uncontrolled and mostly remain the same after construction.

5.1 Pre-Development Conditions

As mentioned earlier, the subject site is currently developed with a 6-pump gas station, a convenient store, and a car wash. Based on the topographical survey received, the site currently has 0.39 ha as impervious area and 0.27 ha as pervious area. The existing asphalt is bordered by curbs and most of the surface water south of the existing convenience store is collected by catch basin and maintenance hole (EWS-04, EWS-05, EWS-08, EWS-09, EWS-10, EWS-11). Moreover, EWS-01, EWS-02, EWS-03, EWS-06, EWS-07 are currently uncontrolled and discharges directly to Merivale Rd., Viewmount Dr. or Glenmore Dr. In addition, the southeast side of EWS-03 covered in grass flows east in an existing catch basin directly connected to the city main sewer system on Merivale Rd. No ICD's or underground storage currently exist on this site which

mean, all surface water is free flow into the city's storm sewer system. All existing building roof are connected into the storm sewer system. The existing on site storm sewer system outlets from a 300mm pipe into to the city main 900mm concrete pipe located on Glenmore Drive. Existing watershed (EWS) discussed above are shown in **Drawing C105.**

5.2 Post-Development Conditions

The following is a description of each drainage areas through the site, refer to **Drawing C106** attached to this report.

- Areas WS-01 consist of uncontrolled areas and is similar to EWS-01, EWS-02 & EWS-03 combined. Due to existing grading, road elevation and site car wash, it is impossible to control this watershed on site.
- Areas WS-02 to WS-04 are roof top building connected into the sewer system.
- Area WS-05 is located from northeast from the proposed fueling station to the car wash exit.
- Area WS-06 is located northwest of the fueling station and the proposed building.
- Area WS-07 is located in between the proposed building and fueling station.
- Area WS-08 is located west of the existing car wash.
- Area WS-09 is located south of the proposed building and existing car wash.

This site possesses many grading constraints by keeping all three entrances and the existing car wash with a finish slab elevation 86.87. Due to the important variation in elevations in between all three entrances (ΔElev. = 1.30m), and from north property corner to south properly corner (ΔElev. = 2.50m) some small areas will remain uncontrolled as mentioned earlier. The uncontrolled area of the proposed site is estimated at 0.20 ha and generates a flow of 14.5L/s for the 5-year storm event respectively. This uncontrolled flow is comparable to existing uncontrolled flow; EWS-01 (2.8 L/s), EWS-02 (0.3 L/s), EWS-03 (13.1 L/s). To summarize the uncontrolled areas, EWS-01 to EWS-03 had a cumulative area of 0.245ha and a 5-yr flow of 16.3 L/s. The proposed uncontrolled area for the redeveloped site is WS-01 which has a cumulative area of 0.20 ha and a 5-yr flow of 14.5 L/s which is consequently 1.8 L/s less than before during a 5-yr storm event. The same flow path is also followed for all areas mentioned above.

All other areas on-site will be captured though a new on-site storm sewer system.

For the purpose of calculating the average runoff coefficients of the post-development areas, the following guidelines were used:

- Landscaped surfaces (grass, trees, shrubs, etc.) C = 0.20
- Impervious surfaces (asphalt, concrete, pavers, rooftops, etc.) C = 0.90
- The runoff coefficient for 100-year event is increased by 25% based on the Ottawa Sewer Design Guidelines.

Appendix A "Stormwater Management Calculations" provides a summary of the post-development areas and average runoff coefficients.

An inlet control device (ICD) is required to control the flows from the site to the allowable release rate of **44.3 L/s** for the 100-year post development storm event. The equivalent storage to attenuate the 100-year post-development flow has been calculated to be **108.0 m³** in addition to the rooftop storage provided on each building. The required storage will be provided by the storm pipes, the structures and by new proposed underground closed pipe system. The calculations are shown in **Appendix A**.

Storage requirements to attenuate the 100-year post-development flow rate are given below:

5.2.1 100-year Site Storage Requirements

The 100-year post-development flow will be captured within the subsurface storage system. Below grade storage will be provided by storm structures, pipes, and mainly underground closed pipe system. All roof areas will also be controlled to provide additional storage. The design will utilize **100.3 m³** of underground storage system and **9.9 m³** in storm sewers pipe. The proposed system is the LandMax Pipe system of 1050mmØ or equivalent non-perforated/non-infiltration storage method, see **Appendix D** for specifications. The invert of the proposed non-perforated pipe is set above the estimated groundwater table elevation (84.24m) and the estimated bedrock elevation (83.50m). The proposed system shall not use

any underground storage chamber with infiltration method to prevent possible hydrocarbon soil infiltration from surface spill.

By excluding the existing uncontrolled watersheds EWS-01 to EWS-03, the allowable discharge at the proposed ICD located in CBMH-03 is limited at **44.3 L/s** based on the 2-yr minor storm event flow generated from existing EWS-04 to EWS-11**.** The design head was calculated as the delta in height between the centre of the orifice and the hydraulic grade line (HGL) for the 100-year event within the underground closed pipe system which is equivalent to the 100-year storage elevation. The orifice outlet flow has been calculated based on the MTO Drainage Management Manuel, Part 3, Chapter 8, p.127:

- Qrifice (m^3/s) = $C_dA(2gH)^{0.5}$

  where:
  C_d = coefficient of discharge (0.61)
  A = Area of orifice opening in m^2
  g = acceleration due to gravity (9.81 m/s^2)
  H = difference in height between 2y HGL and centre of the orifice in metres

See **Appendix A** for detailed pipe outlet calculations and **Drawing C104** for ICD detail.

The **Table 2** lists all the requirements for the manufacturer to design the appropriate ICD.

Table 2 - ICD Schedule

ICD ID	Location	Outlet Diameter (mm)	Flow 5y/100y (L/s)	Head 5y/100y (m)	Equivalent Diameter (mm)	Model
1	CBMH-04	300	32.5/44.3	0.68/1.31	135	FRAME & PLATE

6.0 STORM SEWERS AND SWM SYSTEM

6.1 Storm Sewers

Calculations showing the storm sewer capacities are appended to this report under **Appendix B**. The storm sewer design spreadsheet is based on the Rational Method and Manning formula and was used to calculate the design flow and required pipe sizes. Capacity required for proposed storm sewers is based on the 5-year rainfall intensity obtained from the Ottawa Sewer Design Guidelines, where T_c is the time of concentration:

- I_5 (mm/hr) = $998.071/(T_c+6.053)^{0.814}$

Drawing C106 shows the proposed drainage areas. Details including pipe lengths, sizes, materials, inverts elevations and structure types are shown on **Drawing C102**.

6.2 SWM System

As mentioned above, the SWM system includes an ICD in CBMH-04 that will control the outlet flow to a maximum of **44.3L/s** during the 100-yr storm event. Any additional flow will be store on-site using underground closed pipe system and the storm sewer system. In between the CBMH-04 and the city main of 900mmØ concrete pipe, an oil grit separator maintenance hole (OGS-01) will be installed to improve the water quality treatment to **80% TSS removal** for all stormwater generated on site within the controlled watershed. The proposed Stormceptor model is EFO-04 from Imbrium Systems or equivalent. A copy of the Stormceptor Sizing Detailed is provided in **Appendix E.**

7.0 SANITARY SEWER

The existing car wash and new building will be served with a new on-site sanitary system. The existing car wash outlet in a 150mmØ PVC pipe North of the building and the proposed building outlet will be located Northeast of the building. Both pipes will be merging into SAMH-01, this maintenance hole will also be useful for maintenance of the existing car wash.

The sanitary pipe will then be connected to SAMH-02 in order to avoid the fuel tanks and be aligned with the SAMH-03 at the new property line of Merivale Road. SAMH-03 will connect the new sanitary system to the existing PVC pipe of 200mmØ which is connected on Merivale Rd.

The average & peak sanitary flow of each building was calculated based on the *City of Ottawa Sewer Design Guidelines* (2012), *MOE Water Design Guidelines* and the *Ontario Building Code / Sewage System Design Flows – Section 8.2.1.3*:

- For restaurant:
  - Average flow: 200 L/seat/day
  - Peak factor: 1.5
  - Peak flow = 0.083 L/s for proposed restaurant of 24 seats
- For existing car wash:
  - Average flow: 1 L per bay
  - Peak factor: 1.5
  - Peak flow = 3.000 L/s for existing car wash of 2 bay
- For commercial/retail:
  - Average flow: 28,000 L/ha/d
  - Peak factor: 1.5
  - Peak flow = 0.015 L/s for proposed convenience store and Common Mechanical & Water Closet Area of 307m^2

The peak sanitary flow for the proposed site is calculated to be **3.32 L/s**, including infiltration. The sanitary load calculations can be found in **Appendix C**. A major part of the peak flow (3.00 L/s) is from the existing car wash which is not modified during this project. The new peak flow from this site will be from the convenience store & restaurant which is estimated to generate 0.10L/s. The Sanitary Sewer Computation Sheet is included in **Appendix B**. Details concerning the existing and proposed pipe lengths and locations are shown on the site servicing plan C102.

8.0 WATER SERVICING

The existing site is currently served by a 50mm water service line entering the Southwest corner of the existing car wash. As mentioned earlier, there was a water valve found on site at the property line with Merivale Road, in between the existing two site entrance. Although the City of Ottawa doesn't have any as-built information, the existing water service line appears to be connected to Merivale Road 152mmØ watermain. The water meter is located in the car wash building and another service line goes in the existing convenience store for the washroom. The existing water service line from Merivale Road to the car wash shall remain but the existing water service line from the car wash to the existing convenience store shall be removed. The existing service post assembly at Merivale Road will be removed and replaced with a new service post assembly as per the City of Ottawa standard detail W35. With the addition of the proposed building, a new 50mmØ water service line shall be connected after the existing water meter toward the new building mechanical room. Details regarding the new and existing watermain service connection pipe size and location are shown on **Drawing C102**.

Boundary conditions were obtained from the City on August 15th, 2023. The City of Ottawa provided the boundary conditions for three different watermain connection on either Viewmount Dr. Glenmanor Dr. or Merivale Rd. As previously mentioned, the existing site is connected to Merivale Rd. 152mm cast iron watermain and the boundary conditions are shown in the table below. Communications with the City of Ottawa are presented in **Appendix F.**

Table 3 - Boundary Conditions

	Unit	Merivale Connection
Min HGL	m	125.0
Max HGL	m	132.9
Max Day + Fireflow (83 L/s)	m	124.1

The water demands are based on the *Ottawa Design guidelines – Water Distribution, 2010* and results for the proposed development are listed in **Table 4**. The fire flow was calculated using the *Fire Underwriters Survey (FUS, 2020)*.

- For existing car wash:
  - Average daily demand: 1 L per bay
  - Maximum daily demand: 1.5 x average daily demand
  - Peak hourly demand: 1.8 x maximum daily demand
- For restaurant:
  - Average daily demand: 200 L/seat/day
  - Maximum daily demand: 1.5 x average daily demand
  - Peak hourly demand: 1.8 x maximum daily demand
- For commercial/retail:
  - Average daily demand: 28,000 L/ha/d
  - Maximum daily demand: 1.5 x average daily demand
  - Peak hourly demand: 1.8 x maximum daily demand

More details and fire flow calculation details can be found in **Appendix C.**

Table 4 - Building Water Demands and Fire Flow

	Average Daily Demand (L/s)	Max Daily Demand (L/s)	Peak Hourly Demand (L/s)	Fire Flow Demand (L/s)	Max Daily + Fire Flow Demand (L/s)
Building B – Existing Car Wash	2.00	3.00	5.40	50	53.00
Building A – Restaurant	0.06	0.08	0.15	83	83.10
Building A – Convenience Store	0.01	0.01	0.03		
Total	**2.07**	**3.10**	**5.58**	**83**	**86.10**

Using the Energy Balance and Hazen Williams Head Loss equations, the watermain network was re-created around the property in the WaterCAD modelling software. The resulting pressures at the existing car wash and proposed building were calculated for each demand scenario in order to verify the minimum recommended residual pressures of 40 psi under peak operating conditions and 20 psi under Max Day + Fire Flow conditions were satisfied. The average day demand was also analysed with the max HGL conditions to ensure no pressures are exceeding 80 psi on site. The resulting pressures are shown in **Table 5** below, and the detailed calculations from WaterCAD are provided in **Appendix G**.

Table 5 - Residual Pressures Under Each Demand & Different HGL

	Average Daily Demand TO Max HGL		Peak Hourly Demand TO Min HGL		Max Daily Demand + FF TO Max Day + FF	
	kPa	psi	kPa	psi	kPa	psi
Connection at Merivale Rd.						
Fire Hydrant	-	-	-	-	339	49
Car Wash	436	63	292	42	333	48
Proposed Building	433	63	289	42	330	48

Based on the results above, the maximum and minimum pressures under every scenario are within the acceptable limits from the City of Ottawa.

As shown in the **Figure 2** below, there is 3 existing fire hydrants within 75m of the existing car wash and 4 existing fire hydrants within 75m of the proposed building. As per Technical Bulletin ISTB-2018-02, the maximum fire hydrant flow from a class AA hydrant within 75m of the building is 95 L/s. In both building fire scenario case, 3 or 4 hydrants of class AA are available providing 285 L/s to 316 L/s which exceeds the 83 L/s fire flow demand calculated in **Table 4**. With that being said, the existing watermain and surrounding fire hydrants will be able to provide domestic and fire flow demands while maintaining adequate pressure in the system.

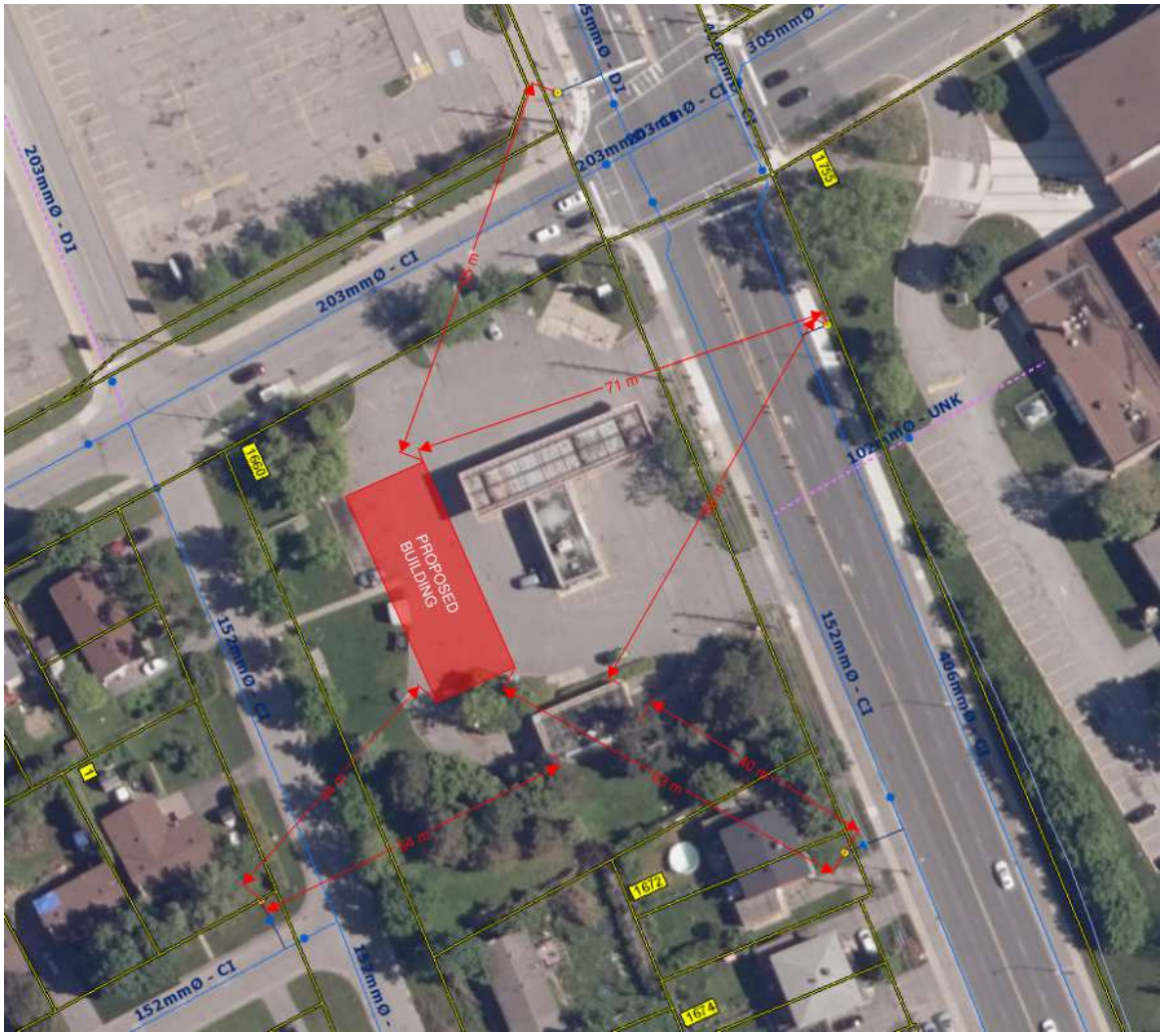

Figure 2 - Fire Hydrant Location

9.0 EROSION AND SEDIMENT CONTROL DURING CONSTRUCTION

To mitigate the impacts due to erosion and sedimentation during construction, erosion and sediment control measures shall be installed and maintained throughout the duration of construction.

Measures shall only be removed once the construction activities are complete, and the site has stabilized.

The measures will include but are not limited to:

- Siltsack® shall be installed between the frame and cover of existing and new catchbasins and maintenance holes, to minimize sediments entering the storm drainage system.
- All grassed areas must be completed prior to the removal of the Siltsack® in catch basins and maintenance holes.
- Light Duty Silt Fence Barriers placed around the perimeter of the site where necessary, installed and maintained according to OPSS 577 and OPSD 219.110.

Refer to **Drawing C101** notes for more details.

10.0 CONCLUSIONS

The 100-year storm event peak flow will be controlled to an allowable discharge of **44.3 L/s**. Stormwater storage is provided up to and including the 100-year storm in storm pipe system, underground oversize closed pipe system and building rooftops prior to discharging to the municipal storm sewer system. On-site stormwater quality treatment of **80% TSS removal** will be achieved by an oil grit separator just before the water outlets into the existing city main storm sewer pipe on Glenmanor Dr.

The water servicing of the proposed building will be provided by a new on-site 50mm water service line connected after the existing city water meter, currently located in the car wash mechanical room. No fire hydrant is required on site. The maximum fire flow of the proposed building and existing car wash was estimated at **83 L/s**.

The sanitary servicing of the site will be provided by an on-site sanitary sewer connected to the existing 450mm sanitary sewer along Merivale Rd. The peak sanitary flow for the proposed development, including infiltration, is calculated to be **3.32 L/s**.

Grading and drainage measures will ensure proper drainage of the site, while erosion and sediment control measures will minimize downstream impacts due to construction activities.

We look forward to receiving approval of this report and the appended plans from the City of Ottawa in order to proceed with construction of the site.

Prepared by:

Patrick Charlebois, P.Eng.

Reviewed by:

Mathew Theiner, P.Eng., ing.

Appendix A

Stormwater Management Calculations

PARSONS

TABLE I - ALLOWABLE RUNOFF CALCULATIONS BASED ON EXISTING CONDITIONS

Area Description	Area (ha)	Time of Conc, Tc (min)	Minor Storm				Minor Storm	
				I_2 (mm/hr)	C_{AVG}	Q_{ALLOW} (L/s)	I_5 (mm/hr)	$Q_{GEN\ 5\text{-}yr}$ (L/s)
EWS-01*	0.03	10.00	Storm = 2 yr	76.81	0.38	**2.1**	104.19	**2.8**
EWS-02*	0.01	10.00	Storm = 2 yr	76.81	0.20	**0.3**	104.19	**0.3**
EWS-03*	0.21	10.00	Storm = 2 yr	76.81	0.21	**9.7**	104.19	**13.1**
EWS-04	0.04	10.00	Storm = 2 yr	76.81	0.50	**4.0**	Total 5-yr flow from EWS-01 to 03	**16.3**
EWS-05	0.01	10.00	Storm = 2 yr	76.81	0.50	**1.1**		
EWS-06	0.08	10.00	Storm = 2 yr	76.81	0.50	**8.2**		
EWS-07	0.06	10.00	Storm = 2 yr	76.81	0.50	**6.8**		
EWS-08	0.06	10.00	Storm = 2 yr	76.81	0.50	**5.9**		
EWS-09	0.09	10.00	Storm = 2 yr	76.81	0.50	**9.9**		
EWS-10	0.01	10.00	Storm = 2 yr	76.81	0.50	**1.4**		
EWS-11	0.06	10.00	Storm = 2 yr	76.81	0.50	**6.9**		
TOTAL	0.66					**44.3**		

* Exsiting uncontrolled areas which will be reduced but still uncontrolled due to grade match. Hence they are not included in Qallow of the site.
** Average Tc = 4.05mins, therefore Tc = 10mins used
*** Average C = 0.70 (pre-development), therefore C = 0.5 used

100.3

5-year Storm $C_{ASPH/ROOF/CONC}$ = 0.90 C_{GRASS} = 0.20
100-year Storm $C_{ASPH/ROOF/CONC}$ = 1.00 C_{GRASS} = 0.25

TABLE II - POST-DEVELOPMENT AVERAGE RUNOFF COEFFICIENTS

Watershed Area No.	Impervious Areas (m^2)	A * C_{ASPH}	Pervious Areas (m^2)	A * C_{GRASS}	Sum AC	Total Area (m^2)	$C_{AVG\ (5yr)}$	$C_{AVG(100yr)}$	
WS-01	143.00	129	1853.00	370.6	499	1996	0.25	0.31	*
WS-02	521.00	469	0.00	0.0	469	521	0.90	1.00	**
WS-03	107.00	96	0.00	0.0	96	107	0.90	1.00	**
WS-04	306.00	275	0.00	0.0	275	306	0.90	1.00	**
WS-05	810.00	729	146.00	29.2	758	956	0.79	0.99	
WS-06	650.00	585	224.00	44.8	630	874	0.72	0.90	
WS-07	457.00	411	0.00	0.0	411	457	0.90	1.00	
WS-08	269.00	242	7.00	1.4	244	276	0.88	1.00	
WS-09	992.00	893	113.00	22.6	915	1105	0.83	1.00	
Total	4255		2343		4298	6598			

* Uncontrolled area, similar to existing
** Roof top storage areas

TABLE III - TOTAL RUNOFF COEFFICIENT FOR CONTROLLED AREAS (EXCLUDING ROOF TOP AREAS)

$$C_{AVG(5yr)} = \frac{\text{Sum AC}}{\text{Total Area}} = \frac{2{,}958}{3{,}668} = 0.81 \qquad C_{AVG(100yr)} = 1.00$$

TABLE IV - SUMMARY OF POST-DEVELOPMENT RUNOFF

Area No	Area (ha)	Storm = 5 yr				Storm = 100 yr			
		I_5 (mm/hr)	$C_{AVG(5yr)}$	Q_{GEN} (L/s)	Q_{CONT} (L/s)	I_{100} (mm/hr)	$C_{AVG(100yr)}$	Q_{GEN} (L/s)	Q_{CONT} (L/s)
WS-01	0.200	104.19	0.25	14.5	-	178.56	0.31	31.0	-
WS-02	0.052	104.19	0.90	13.6	**32.5**	178.56	1.00	25.9	**44.3**
WS-03	0.011	104.19	0.90	2.8		178.56	1.00	5.3	
WS-04	0.031	104.19	0.90	8.0		178.56	1.00	15.2	
WS-05	0.096	104.19	0.79	22.0		178.56	0.99	47.0	
WS-06	0.087	104.19	0.72	18.2		178.56	0.90	39.1	
WS-07	0.046	104.19	0.90	11.9		178.56	1.00	22.7	
WS-08	0.028	104.19	0.88	7.1		178.56	1.00	13.7	
WS-09	0.111	104.19	0.83	26.5		178.56	1.00	54.9	
Total	0.660			124.5	**32.5**			254.7	**44.3**

WS-01 is an uncontrolled area, similar to existing uncontrolled area from EWS-01 to EWS-03, generating less flow as shown in Table I above.
WS-02 to WS-04 are roof top storage areas

$I_5 = 998.071 / (Tc+6.053)^{0.814}$
$I_{100} = 1735.688 / (Tc+6.014)^{0.820}$
Time of concentration (min), Tc = 10 mins

Table V - Storage Volumes (5-Year and 100-Year Storm Events)

Site Storage Requirement

C_{AVG} = 0.81 (5-year)
C_{AVG} = 1.00 (100-year)
Time Interval = 5 (mins)
Drainage Area = 0.367 (hectares)

	Release Rate = 32.5 (L/sec)						Release Rate = 44.3 (L/sec)					
	Return Period = 5 (years)						Return Period = 100 (years)					
	IDF Parameters, A = 998.071, B = 0.814						IDF Parameters, A = 1735.688, B = 0.820					
	$I = A/(T_c+6.053)^B$						$I = A/(T_c+6.014)^B$					
Duration (min)	Rainfall Intensity, I (mm/hr)	Peak Flow (L/sec)	Peak Flow from Roof (L/sec)	Release Rate (L/sec)	Storage Rate (L/sec)	Storage (m^3)	Rainfall Intensity, I (mm/hr)	Peak Flow (L/sec)	Peak Flow from Roof (L/sec)	Release Rate (L/sec)	Storage Rate (L/sec)	Storage (m^3)
0	-	-	-	-	-	-	-	-	-	-	-	-
5	141.2	116.1	7.7	32.5	91.3	27.4	242.7	247.5	10.4	44.3	213.6	64.1
10	104.2	85.7	7.7	32.5	60.9	36.6	178.6	182.1	10.4	44.3	148.2	88.9
15	83.6	68.7	7.7	32.5	44.0	39.6	142.9	145.7	10.4	44.3	111.8	100.6
20	70.3	57.8	7.7	32.5	33.0	39.6	120.0	122.3	10.4	44.3	88.4	106.1
25	60.9	50.1	7.7	32.5	25.3	38.0	103.8	105.9	10.4	44.3	72.0	108.0
30	53.9	44.3	7.7	32.5	19.6	35.3	91.9	93.7	10.4	44.3	59.8	107.6
35	48.5	39.9	7.7	32.5	15.1	31.8	82.6	84.2	10.4	44.3	50.3	105.6
40	44.2	36.3	7.7	32.5	11.6	27.8	75.1	76.6	10.4	44.3	42.7	102.5
45	40.6	33.4	7.7	32.5	8.6	23.4	69.1	70.4	10.4	44.3	36.5	98.5
50	37.7	31.0	7.7	32.5	6.2	18.6	64.0	65.2	10.4	44.3	31.3	93.9
55	35.1	28.9	7.7	32.5	4.1	13.6	59.6	60.8	10.4	44.3	26.9	88.7
60	32.9	27.1	7.7	32.5	2.3	8.4	55.9	57.0	10.4	44.3	23.1	83.1
65	31.0	25.5	7.7	32.5	0.8	3.0	52.6	53.7	10.4	44.3	19.8	77.1
70	29.4	24.2	7.7	32.5	-0.6	-2.6	49.8	50.8	10.4	44.3	16.8	70.8
75	27.9	22.9	7.7	32.5	-1.8	-8.2	47.3	48.2	10.4	44.3	14.3	64.2
80	26.6	21.8	7.7	32.5	-2.9	-14.0	45.0	45.9	10.4	44.3	12.0	57.4
85	25.4	20.9	7.7	32.5	-3.9	-19.9	43.0	43.8	10.4	44.3	9.9	50.4
90	24.3	20.0	7.7	32.5	-4.8	-25.9	41.1	41.9	10.4	44.3	8.0	43.2
95	23.3	19.2	7.7	32.5	-5.6	-31.9	39.4	40.2	10.4	44.3	6.3	35.9
100	22.4	18.4	7.7	32.5	-6.3	-38.0	37.9	38.6	10.4	44.3	4.7	28.4
105	21.6	17.7	7.7	32.5	-7.0	-44.2	36.5	37.2	10.4	44.3	3.3	20.8
110	20.8	17.1	7.7	32.5	-7.6	-50.4	35.2	35.9	10.4	44.3	2.0	13.0
115	20.1	16.5	7.7	32.5	-8.2	-56.7	34.0	34.7	10.4	44.3	0.8	5.2
120	19.5	16.0	7.7	32.5	-8.8	-63.0	32.9	33.5	10.4	44.3	-0.4	-2.7
Max =						**39.6**						**108.0**

Notes

1) Peak flow is equal to the product of 2.78 x C x I x A
2) Rainfall Intensity, $I_5 = A/(Tc+6.053)^B$ & $I_{100} = A/(Tc+6.014)^B$
3) Release Rate = LESSER of Min (Release Rate, Peak Flow) - Minus 100 Year Flow Of Uncontroled Areas OR Pipe Outlet Capacity
4) Storage Rate = Peak Flow - Release Rate
5) Storage = Duration x Storage Rate
6) Maximium Storage = Max Storage Over Duration

Table VI - Roof Storage Volumes (5-Year and 100-Year Storm Events)

Storage Requirement for Roof Area Building A - Convience Store & Restaurant (WS-02)

C_{AVG} =	0.90	(5-year)		
C_{AVG} =	1.00	(100-year)	Zurn Z105 Control-Flo Single Notch	
Time Interval =	5	(mins)	Number of Drains =	2
Drainage Area =	0.026	(hectares) per drain	Total Release Rate 5 year =	**2.96 L/s**
	261	(sqm) per drain	Total Release Rate 100 year =	**3.89 L/s**

	Release Rate = **1.48** (L/sec) per drain					Release Rate = **1.94** (L/sec) per drain				
	Return Period = 5 (years)					100 (years)				
	IDF Parameters, A = 998.071 , B = 0.814					IDF Parameters, A = 1735.688 , B = 0.820				
	$I = A/(T_c+6.053)^B$					$I = A/(T_c+6.014)^B$				
Duration (min)	Rainfall Intensity, I (mm/hr)	Peak Flow (L/sec)	Release Rate (L/sec)	Storage Rate (L/sec)	Storage (m^3)	Rainfall Intensity, I (mm/hr)	Peak Flow (L/sec)	Release Rate (L/sec)	Storage Rate (L/sec)	Storage (m^3)
0	-	-	-	-	-	-	-	-	-	-
5	141.2	9.2	1.5	7.7	2.3	242.7	17.6	1.9	15.6	4.7
10	104.2	6.8	1.5	5.3	3.2	178.6	12.9	1.9	11.0	6.6
15	83.6	5.4	1.5	4.0	3.6	142.9	10.3	1.9	8.4	7.6
20	70.3	4.6	1.5	3.1	3.7	120.0	8.7	1.9	6.7	8.1
25	60.9	4.0	1.5	2.5	3.7	103.8	7.5	1.9	5.6	8.4
30	53.9	3.5	1.5	2.0	3.7	91.9	6.7	1.9	4.7	8.5
35	48.5	3.2	1.5	1.7	3.5	82.6	6.0	1.9	4.0	8.5
40	44.2	2.9	1.5	1.4	3.4	75.1	5.4	1.9	3.5	8.4
45	40.6	2.6	1.5	1.2	3.2	69.1	5.0	1.9	3.1	8.3
50	37.7	2.5	1.5	1.0	2.9	64.0	4.6	1.9	2.7	8.1
55	35.1	2.3	1.5	0.8	2.7	59.6	4.3	1.9	2.4	7.8
60	32.9	2.1	1.5	0.7	2.4	55.9	4.0	1.9	2.1	7.6
65	31.0	2.0	1.5	0.5	2.1	52.6	3.8	1.9	1.9	7.3
70	29.4	1.9	1.5	0.4	1.8	49.8	3.6	1.9	1.7	7.0
75	27.9	1.8	1.5	0.3	1.5	47.3	3.4	1.9	1.5	6.6
80	26.6	1.7	1.5	0.3	1.2	45.0	3.3	1.9	1.3	6.3
85	25.4	1.7	1.5	0.2	0.9	43.0	3.1	1.9	1.2	5.9
90	24.3	1.6	1.5	0.1	0.6	41.1	3.0	1.9	1.0	5.6
95	23.3	1.5	1.5	0.0	0.2	39.4	2.9	1.9	0.9	5.2
100	22.4	1.5	1.5	0.0	0.0	37.9	2.7	1.9	0.8	4.8
105	21.6	1.4	1.4	0.0	0.0	36.5	2.6	1.9	0.7	4.4
110	20.8	1.4	1.4	0.0	0.0	35.2	2.5	1.9	0.6	4.0
115	20.1	1.3	1.3	0.0	0.0	34.0	2.5	1.9	0.5	3.6
120	19.5	1.3	1.3	0.0	0.0	32.9	2.4	1.9	0.4	3.2
Max Storage (m^3) per drain=					**3.7**					**8.5**
Average Ponding Depth (mm)					**14.3**					**32.5**
Maximum Ponding Depth (mm)					**98.9**					**130.0**

Notes

1) Peak flow is equal to the product of 2.78 x C x I x A

2) Rainfall Intensity, $I_5 = A/(Tc+6.053)^B$ & $I_{100} = A/(Tc+6.014)^B$

3) Release Rate = LESSER of Min (Release Rate, Peak Flow) - Minus 100 Year Flow Of Uncontroled Areas OR Pipe Outlet Capacity

4) Storage Rate = Peak Flow - Release Rate

5) Storage = Duration x Storage Rate

6) Maximium Storage = Max Storage Over Duration

Table VI - Roof Storage Volumes (5-Year and 100-Year Storm Events)

Storage Requirement for Roof Area Building B - Car Wash (WS-03)

C_{AVG} =	0.90	(5-year)		
C_{AVG} =	1.00	(100-year)	Zurn Z105 Control-Flo Single Notch	
Time Interval =	5	(mins)	Number of Drains =	2
Drainage Area =	0.005	(hectares) per drain	Total Release Rate 5 year =	**2.06 L/s**
	54	(sqm) per drain	Total Release Rate 100 year =	**2.90 L/s**

	Release Rate = **1.03** (L/sec) per drain					Release Rate = **1.45** (L/sec) per drain				
	Return Period = 5 (years)					100 (years)				
	IDF Parameters, A = 998.071 , B = 0.814					IDF Parameters, A = 1735.688 , B = 0.820				
	$I = A/(T_c+6.053)^B$					$I = A/(T_c+6.014)^B$				
Duration (min)	Rainfall Intensity, I (mm/hr)	Peak Flow (L/sec)	Release Rate (L/sec)	Storage Rate (L/sec)	Storage (m^3)	Rainfall Intensity, I (mm/hr)	Peak Flow (L/sec)	Release Rate (L/sec)	Storage Rate (L/sec)	Storage (m^3)
0	-	-	-	-	-	-	-	-	-	-
5	141.2	1.9	1.0	0.9	0.3	242.7	3.6	1.5	2.2	0.6
10	104.2	1.4	1.0	0.4	0.2	178.6	2.7	1.5	1.2	0.7
15	83.6	1.1	1.0	0.1	0.1	142.9	2.1	1.5	0.7	0.6
20	70.3	0.9	0.9	0.0	0.0	120.0	1.8	1.5	0.3	0.4
25	60.9	0.8	0.8	0.0	0.0	103.8	1.5	1.5	0.1	0.1
30	53.9	0.7	0.7	0.0	0.0	91.9	1.4	1.4	0.0	0.0
35	48.5	0.6	0.6	0.0	0.0	82.6	1.2	1.2	0.0	0.0
40	44.2	0.6	0.6	0.0	0.0	75.1	1.1	1.1	0.0	0.0
45	40.6	0.5	0.5	0.0	0.0	69.1	1.0	1.0	0.0	0.0
50	37.7	0.5	0.5	0.0	0.0	64.0	1.0	1.0	0.0	0.0
55	35.1	0.5	0.5	0.0	0.0	59.6	0.9	0.9	0.0	0.0
60	32.9	0.4	0.4	0.0	0.0	55.9	0.8	0.8	0.0	0.0
65	31.0	0.4	0.4	0.0	0.0	52.6	0.8	0.8	0.0	0.0
70	29.4	0.4	0.4	0.0	0.0	49.8	0.7	0.7	0.0	0.0
75	27.9	0.4	0.4	0.0	0.0	47.3	0.7	0.7	0.0	0.0
80	26.6	0.4	0.4	0.0	0.0	45.0	0.7	0.7	0.0	0.0
85	25.4	0.3	0.3	0.0	0.0	43.0	0.6	0.6	0.0	0.0
90	24.3	0.3	0.3	0.0	0.0	41.1	0.6	0.6	0.0	0.0
95	23.3	0.3	0.3	0.0	0.0	39.4	0.6	0.6	0.0	0.0
100	22.4	0.3	0.3	0.0	0.0	37.9	0.6	0.6	0.0	0.0
105	21.6	0.3	0.3	0.0	0.0	36.5	0.5	0.5	0.0	0.0
110	20.8	0.3	0.3	0.0	0.0	35.2	0.5	0.5	0.0	0.0
115	20.1	0.3	0.3	0.0	0.0	34.0	0.5	0.5	0.0	0.0
120	19.5	0.3	0.3	0.0	0.0	32.9	0.5	0.5	0.0	0.0
Max Storage (m^3) per drain=					**0.3**					**0.7**
Average Ponding Depth (mm)					**4.8**					**13.5**
Maximum Ponding Depth (mm)					**68.8**					**97.0**

Notes

1) Peak flow is equal to the product of 2.78 x C x I x A

2) Rainfall Intensity, $I_5 = A/(Tc+6.053)^B$ & $I_{100} = A/(Tc+6.014)^B$

3) Release Rate = LESSER of Min (Release Rate, Peak Flow) - Minus 100 Year Flow Of Uncontroled Areas OR Pipe Outlet Capacity

4) Storage Rate = Peak Flow - Release Rate

5) Storage = Duration x Storage Rate

6) Maximium Storage = Max Storage Over Duration

Table VI - Roof Storage Volumes (5-Year and 100-Year Storm Events)

Storage Requirement for Roof Area Building C - Gas Station Canopy (WS-04)

C_{AVG} =	0.90	(5-year)		
C_{AVG} =	1.00	(100-year)	Zurn Z105 Control-Flo Single Notch	
Time Interval =	5	(mins)	Number of Drains =	2
Drainage Area =	0.015	(hectares) per drain	Total Release Rate 5 year =	**2.70 L/s**
	153	(sqm) per drain	Total Release Rate 100 year =	**3.60 L/s**

	Release Rate = **1.35** (L/sec) per drain					Release Rate = **1.80** (L/sec) per drain				
	Return Period = 5 (years)					100 (years)				
	IDF Parameters, A = 998.071 , B = 0.814					IDF Parameters, A = 1735.688 , B = 0.820				
	$I = A/(T_c+6.053)^B$					$I = A/(T_c+6.014)^B$				
Duration (min)	Rainfall Intensity, I (mm/hr)	Peak Flow (L/sec)	Release Rate (L/sec)	Storage Rate (L/sec)	Storage (m^3)	Rainfall Intensity, I (mm/hr)	Peak Flow (L/sec)	Release Rate (L/sec)	Storage Rate (L/sec)	Storage (m^3)
0	-	-	-	-	-	-	-	-	-	-
5	141.2	5.4	1.3	4.1	1.2	242.7	10.3	1.8	8.5	2.6
10	104.2	4.0	1.3	2.6	1.6	178.6	7.6	1.8	5.8	3.5
15	83.6	3.2	1.3	1.8	1.7	142.9	6.1	1.8	4.3	3.8
20	70.3	2.7	1.3	1.3	1.6	120.0	5.1	1.8	3.3	4.0
25	60.9	2.3	1.3	1.0	1.5	103.8	4.4	1.8	2.6	3.9
30	53.9	2.1	1.3	0.7	1.3	91.9	3.9	1.8	2.1	3.8
35	48.5	1.9	1.3	0.5	1.1	82.6	3.5	1.8	1.7	3.6
40	44.2	1.7	1.3	0.3	0.8	75.1	3.2	1.8	1.4	3.3
45	40.6	1.6	1.3	0.2	0.6	69.1	2.9	1.8	1.1	3.1
50	37.7	1.4	1.3	0.1	0.3	64.0	2.7	1.8	0.9	2.8
55	35.1	1.3	1.3	0.0	0.0	59.6	2.5	1.8	0.7	2.4
60	32.9	1.3	1.3	0.0	0.0	55.9	2.4	1.8	0.6	2.1
65	31.0	1.2	1.2	0.0	0.0	52.6	2.2	1.8	0.4	1.7
70	29.4	1.1	1.1	0.0	0.0	49.8	2.1	1.8	0.3	1.3
75	27.9	1.1	1.1	0.0	0.0	47.3	2.0	1.8	0.2	0.9
80	26.6	1.0	1.0	0.0	0.0	45.0	1.9	1.8	0.1	0.5
85	25.4	1.0	1.0	0.0	0.0	43.0	1.8	1.8	0.0	0.1
90	24.3	0.9	0.9	0.0	0.0	41.1	1.7	1.7	0.0	0.0
95	23.3	0.9	0.9	0.0	0.0	39.4	1.7	1.7	0.0	0.0
100	22.4	0.9	0.9	0.0	0.0	37.9	1.6	1.6	0.0	0.0
105	21.6	0.8	0.8	0.0	0.0	36.5	1.6	1.6	0.0	0.0
110	20.8	0.8	0.8	0.0	0.0	35.2	1.5	1.5	0.0	0.0
115	20.1	0.8	0.8	0.0	0.0	34.0	1.4	1.4	0.0	0.0
120	19.5	0.7	0.7	0.0	0.0	32.9	1.4	1.4	0.0	0.0
Max Storage (m^3) per drain=					**1.7**					**4.0**
Average Ponding Depth (mm)					**10.9**					**25.9**
Maximum Ponding Depth (mm)					**90.2**					**120.4**

Notes

1) Peak flow is equal to the product of 2.78 x C x I x A

2) Rainfall Intensity, $I_5 = A/(Tc+6.053)^B$ & $I_{100} = A/(Tc+6.014)^B$

3) Release Rate = LESSER of Min (Release Rate, Peak Flow) - Minus 100 Year Flow Of Uncontroled Areas OR Pipe Outlet Capacity

4) Storage Rate = Peak Flow - Release Rate

5) Storage = Duration x Storage Rate

6) Maximium Storage = Max Storage Over Duration

Table VII - Storage Volumes (5-Year and 100-Year Storm Events)
ADDITIONAL STORAGE CALCULATIONS

Underground Storage

Underground Site Storage Required =	108.0	m^3	3813	ft^3
Min. Chamber Storage Required =	98.1	m^3	3464	ft^3
Available Length =	40	m	131.23	ft
Availabe Width =	9.5	m	31.17	ft

Land Max Volume Calculation **MINIMUM SIZE**

Nominal Interior Diameter =	1050	mm
Nominal Exterior Diameter =	1219	mm
Pipe Cross-Section Area =	0.87	m^2
Volume Per m of pipe =	0.87	m^3
Length of pipe Required =	113.28	m
# of Rows =	3.00	
Length of pipe per rows =	38.00	m
Value of C =	1.829	m
Value of X =	0.457	m
Value of S =	0.61	m
Trench Width =	5.79	m
Trench Depth =	1.52	m
Trench Length =	38.91	m
Additional Chamber Storage Volume =	100.3	m^3
Final Underground Storage Volume =	110.2	m^3

10.1

Additional Storage

CBMH-03 inv. =	84.30	m
CBMH-04 inv. =	84.15	m
length =	30.9	m
Pipe Size =	600	mm
Slope =	0.50	%
Pipe Cross-Section Area =	0.28	m^2
Volume Per m of pipe =	0.28	m^3
Total Volume =	8.74	m^3
Pipe on Site Storage Volume =	9.9	m^3

STM Sewer Pipes
Additional Storage

CBMH-04 inv. =	84.30	m
Manifold inv. =	84.33	m
length =	4	m
Pipe Size =	600	mm
Slope =	0.75	%
Pipe Cross-Section Area =	0.28	m^2
Volume Per m of pipe =	0.28	m^3
Total Volume =	1.13	m^3
	100.30	

ICD Design Table - VIII

$Q = 0.62 \times A \times [2gh]^{0.5}$ where: g= 9.81

Location	Pipe Outlet Diameter (mm)	Pipe Outlet Invert (m)	HGL (m)		Outlet flow (L/s)		Trial orifice size (mm)	Orifice size (mm)	Orifice Area (sqm)	Head (m)	
			100-year event	5-year event	100-year event	5-year event				100-year event	5-year event
CBMH-04	300	84.00	85.38	84.75	44.3	32.5	**135**	135.01	0.01432	1.31	0.68

Appendix B

Storm and Sanitary Sewer Computation Forms

PARSONS

STORM SEWER COMPUTATION FORM

Rational Method

Q = 2.78*A*I*R

Q = Flow (L/sec)
A = Area (ha)
I = Rainfall Intensity (mm/h)
R = Ave. Runoff Coefficient

City of Ottawa IDF Curve - 5-yr

I_5 = 998.071/(Tc+6.053) ^ 0.814

Minimum Time of Conc. Tc = **10 min**

Manning's n = **0.013**

Drainage Area	From	To	Area (ha)	Runoff Parameters: Runoff Coeff. R	Indiv. 2.78AR	Accum. 2.78AR	Time of Conc. (min)	Rainfall Intensity (mm/hr)	Roof Flow Q (L/sec)	Peak Flow Q (L/sec)	Pipe Dia. nom. (mm)	Pipe Dia. actual (mm)	Slope (%)	Length (m)	Capacity full (L/sec)	Velocity full (m/sec)	Velocity actual (m/sec)	Time of Flow (min)	Q(d) / Q(f)	REMARKS
WS-03	-	CB-01	0.01	0.90					2.70	2.70	150	152	1.00	8.7	15.89	0.87	0.54	0.17	0.17	Roof Drain B - Existing Car Wash
WS-05	CB-01	CBMH-03	0.10	0.79	0.21	0.21	10.00	104.19	2.70	24.66	250	254	2.00	24.3	87.74	1.73	1.23	0.23	0.28	
WS-06	CB-02	CBMH-01	0.09	0.72	0.18	0.18	10.00	104.19		18.24	250	254	2.00	11.6	87.74	1.73	1.14	0.11	0.21	
WS-04	-	CBMH-01	0.015	0.90					1.35	1.35	150	152	2.00	8.9	22.47	1.23	0.57	0.12	0.06	Half of Roof Drain C - Proposed Canopy
	CBMH-01	CBMH-02				0.18	10.11	103.62	1.35	19.49	250	254	1.00	26.9	62.04	1.22	0.89	0.37	0.31	
WS-04	-	CBMH-02	0.015	0.90					1.35	1.35	150	152	2.00	8.9	22.47	1.23	0.57	0.12	0.06	Half of Roof Drain C - Proposed Canopy
WS-07	CBMH-02	CBMH-03	0.05	0.90	0.11	0.29	10.48	101.72	2.70	32.14	250	254	1.00	23.9	62.04	1.22	1.05	0.33	0.52	
WS-02	-	CBMH-03	0.05	0.90					2.96	2.96	150	152	2.00	3.0	22.47	1.23	0.71	0.04	0.13	Roof Drain A - Proposed Convience Store
WS-08	CBMH-03	CBMH-04	0.03	0.88	0.07	0.36	10.81	100.10	8.36	44.11	600	610	0.50	30.9	452.94	1.55	0.84	0.33	0.10	
WS-09	CB-03	Chamber Insert-Tee	0.11	0.83	0.25	0.25	10.00	104.19		26.52	250	254	2.00	2.0	87.74	1.73	1.25	0.02	0.30	
	Chamber Insert-Tee	SC-MANIFOLD																		Undergound Chambers
	SC-MANIFOLD	CBMH-04				0.25	10.02	104.09		26.49	600	610	0.75	4.0	554.74	1.90	0.87	0.04	0.05	
	CBMH-04	OGS-1				0.61	11.14	98.53	8.36	68.62	300	305	3.00	3.6	174.73	2.39	1.87	0.03	0.39	
	OGS-1	*Ex. Main Sewer*				0.61	11.17	98.39	8.36	68.54	300	305	3.00	7.3	174.73	2.39	1.87	0.05	0.39	
	MHST 17305	*MHST 17306*				0.61	11.22	98.16	8.36	68.40	*900*	*914*	*0.20*	*83.2*	*844.60*	*1.29*	*0.67*	*1.08*	*0.08*	Existing Flows from surrounding area are not considered

Note:

Design: P.Charlebois
Check: M. Theiner
Date: Sep-25

Project: 1660 Merivale Rd., Nepean
Gas Station & Convenience Store/Resto
Client: Harnois Énergie

STORM SEWER COMPUTATION FORM

Rational Method

Q = 2.78*A*I*R

Q = Flow (L/sec)
A = Area (ha)
I = Rainfall Intensity (mm/h)
R = Ave. Runoff Coefficient

City of Ottawa IDF Curve - 100-yr

I_{100} = 1735.688/(Tc+6.014) ^ 0.820

Minimum Time of Conc. Tc = **10 min**

Manning's n = **0.013**

Drainage Area	From	To	Area (ha)	Runoff Parameters: Runoff Coeff. R	Indiv. 2.78AR	Accum. 2.78AR	Time of Conc. (min)	Rainfall Intensity (mm/hr)	Roof Flow Q (L/sec)	Peak Flow Q (L/sec)	Pipe Dia. nom. (mm)	Pipe Dia. actual (mm)	Slope (%)	Length (m)	Capacity full (L/sec)	Velocity full (m/sec)	Velocity actual (m/sec)	Time of Flow (min)	Q(d) / Q(f)	REMARKS
WS-03	-	CB-01	0.01	1.00					3.60	3.60	150	152	1.00	8.7	15.89	0.87	0.59	0.17	0.23	Roof Drain B - Existing Car Wash
WS-05	CB-01	CBMH-03	0.10	0.99	0.26	0.26	10.00	178.56	3.60	50.65	250	254	2.00	24.3	87.74	1.73	1.54	0.23	0.58	
WS-06	CB-02	CBMH-01	0.09	0.90	0.22	0.22	10.00	178.56		39.08	250	254	2.00	11.6	87.74	1.73	1.42	0.11	0.45	
WS-04	-	CBMH-01	0.015	1.00					1.80	1.80	150	152	2.00	8.9	22.47	1.23	0.64	0.12	0.08	Half of Roof Drain C - Proposed Canopy
	CBMH-01	CBMH-02				0.22	10.11	177.56	1.80	40.66	250	254	1.00	26.9	62.04	1.22	1.14	0.37	0.66	
WS-04	-	CBMH-02	0.015	1.00					1.80	1.80	150	152	2.00	8.9	22.47	1.23	0.64	0.12	0.08	Half of Roof Drain C - Proposed Canopy
WS-07	CBMH-02	CBMH-03	0.05	1.00	0.13	0.35	10.48	174.29	3.60	63.89	250	254	1.00	23.9	62.04	1.22	1.27	0.33	1.03	
WS-02	-	CBMH-03	0.05	1.00					3.89	3.89	150	152	2.00	3.0	22.47	1.23	0.76	0.04	0.17	Roof Drain A - Proposed Convience Store
WS-08	CBMH-03	CBMH-04	0.03	1.00	0.08	0.42	10.81	171.48	11.10	83.57	600	610	0.50	30.9	452.94	1.55	0.96	0.33	0.18	
WS-09	CB-03	Chamber Insert-Tee	0.11	1.00	0.31	0.31	10.00	178.56		54.85	250	254	2.00	2.0	87.74	1.73	1.58	0.02	0.63	
	Chamber Insert-Tee	SC-MANIFOLD																		Undergound Chambers
	SC-MANIFOLD	CBMH-04				0.31	10.02	178.38		54.80	600	610	0.75	4.0	554.74	1.90	1.03	0.04	0.10	
	CBMH-04	OGS-1				0.73	11.14	168.77	11.10	134.27	300	305	3.00	3.6	174.73	2.39	2.32	0.03	0.77	
	OGS-1	*Ex. Main Sewer*				0.73	11.17	168.53	11.10	134.09	300	305	3.00	7.3	174.73	2.39	2.32	0.05	0.77	
	MHST 17305	*MHST 17306*				0.73	11.22	168.13	11.10	133.80	*900*	*914*	*0.20*	*83.2*	*844.60*	*1.29*	*0.78*	*1.08*	*0.16*	Existing Flows from surrounding area are not considered

Note:

Design: P.Charlebois
Check: M. Theiner
Date: Sep-25

Project: 1660 Merivale Rd., Nepean
Gas Station & Convenience Store/Resto
Client: Harnois Énergie

SANITARY SEWER DESIGN SHEET

Drainage Area	From	To	Peak Flow Q (L/sec)	Sewer Data: Type of Pipe	Pipe Dia. nom. (mm)	Pipe Dia. actual (mm)	Slope (%)	Length (m)	Capacity full (L/sec)	Velocity full (m/sec)	Velocity actual (m/sec)	Time of Flow (min)	Q(d) / Q(f)	REMARKS
	Car Wash	SAMH-01	3.22	PVC	150	152.4	3.0	3.2	27.5	1.51	0.87	0.06	0.12	Including Infiltration
	Proposed Building	SAMH-01	0.10	PVC	150	152.4	2.0	10.9	22.5	1.23	0.39	0.46	0.00	
	SAMH-01	SAMH-02	3.32	PVC	200	203.2	1.0	16.8	34.2	1.06	0.59	0.47	0.10	
	SAMH-02	SAMH-03	3.32	PVC	200	203.2	1.0	23.0	34.2	1.06	0.59	0.65	0.10	
	SAMH-03	*Ex. Clean Out*	3.32	*PVC*	*200*	*203.2*	*1.0*	*6.5*	*34.2*	*1.06*	*0.59*	*0.18*	*0.10*	
	Ex. Clean Out	*Ex. Main Pipe*	3.32	*PVC*	*200*	*203.2*	*1.0*	*13.0*	*34.2*	*1.06*	*0.59*	*0.37*	*0.10*	

Manning's n = **0.013**

Design: P. Charlebois
Check: M. Theiner
Date: December, 2025

Project Name: 1660 Merivale Rd.
Parsons Project #: 478684
Client: Harnois Énergies
Client Project #:

Appendix C

Sanitary Load and Fire Flow

PARSONS

SANITARY DESIGN FLOWS

Area	RESTAURANT						AUTOMOTIVE SERVICE CENTRE				COMMERCIAL/RETAIL			TOTAL	INFILTRATION			Total
	Rest. Area (m^2)	Seats	Flow per seat (L/seat/d)	Rest. Flow (L/s)	Peak Factor over 6-hr	Peak Flow (L/s)	Number of Bays	Average Car Wash Flow	Peak Factor	Peak Flow (L/s)	Retail Area (m^2)	Peak Factor	Peak Flow (L/s)	Peak Flow (L/s)	Site Area (ha)	Infiltration Allowance (L/s/ha)	Infilt. Flow (L/s)	Total Peak Flow (L/s)
Subject Site															0.66	0.33	0.22	0.218
Existing Car Wash - Building B							*1.0*	*2.0*	*1.5*	*3.000*				3.000				3.000
Proposed Convenience Store / Restaurant/Common Area	214	24	200	0.06	1.5	0.083					307	1.5	0.015	0.098				0.098
																	Total	**3.32**

Design:	PC	**Project:**	Harnois Gas Station
Check :	MT	**Location:**	1660 Merivalve Road. Ottawa, Ontario
Dwg reference:		**Project # :**	478684
		Date:	December, 2025
		Sheet:	1 of 1

Average Daily Demands

(Based on City of Ottawa *Sewer Design Guidelines 2012* and *MOE Water Design Guidelines*)

Average Residential Daily Flow =	280	L/p/d
Institutional Flow =	28,000	L/ha/d
Commercial Flow =	28,000	L/ha/d
Light Industrial Flow =	35,000	L/ha/d
Heavy Industrial Flow =	55,000	L/ha/d
Hotel Daily Flow =	225	L/bed/d
Office/Warehouse Daily Flow =	75	L/empl/d
Shopping Centres =	2,500	L/(1000m^2/d)

Population Densities

Average suburban residential dev.	60	p/ha
Single family	3.4	p./unit
Semi-detached	2.7	p./unit
Duplex	2.3	p./unit
Townhouse	2.7	p./unit
Appartment average	1.8	p./unit
Bachelor	1.4	p./unit
1 Bedroom	1.4	p./unit
2 Bedrooms	2.1	p./unit
3 Bedrooms	3.1	p./unit
Hotel room, 18 m2	1	p./unit
Restaurant, 1 m2	1	p./unit
Office	1	p/25m^2
Warehouse	1	p/90m^2
Automotive Service Centre, per bay	1	p/bay (plus management)

Peak Factors

Commercial =	1.5	if commercial contribution > 20%, otherwise
Institutional =	1.5	if institutional contribution > 20%, otherwise
Industrial =		per Appendix 4-B.0 Graph
Residential :		Harmon Equation
		1 + (14/(4+(Capita/1000) ^ 0.5))*8
		min =
		max =

Infiltration allowance (dry weather)	0.05	L/s/ha
Infiltration allowance (wet weather)	0.28	L/s/ha
I/I (total)	0.33	L/s/ha

(Based on the *Ontario Building Code / Sewage System Design Flows - Section 8.2.1.3*)

Food Service Operations

Restaurant (not 24 hour), per seat	125	(L/seat/d)
Restaurant (24 hour), per seat	200	(L/seat/d)

1660 Merivalve Rd. Harnois Énergie - Estimated Water Demands

Area	Seats	Population	Gross Floor Area (m2)	Average Daily Demand (ADD) (L/s)	Maximum Daily Demand (MDD) (L/s)	Peak Hourly Demand (PHD) (L/s)	Fire Flow (FF) (L/s)	MDD + FF (L/s)
Existing Building B								
1 Bay Car Wash	NA	NA	107	2.00	3.00	5.40	50	53.00
Proposed Building A								
Restaurant	24	NA	214	0.06	0.08	0.15	83	83.10
Convenience Store	NA	NA	307	0.01	0.01	0.03		
Total				**2.07**	**3.10**	**5.58**	**83**	**86.10**

Average Daily Demand

Based on Ottawa Design Guidelines - Water Distribution, 2010 and MOE Design Guidelines for Drinking-Water Systems, 2008

Average Residential Daily Flow =	280	L/p/d
Institutional Flow =	28,000	L/gross ha/d
Commercial Flow =	28,000	L/gross ha/d
Light Industrial Flow =	35,000	L/gross ha/d
Heavy Industrial Flow =	55,000	L/gross ha/d
Hotel Daily Flow =	225	L/bed/d
Office/Warehouse Daily Flow =	75	L/person/d
Office/Warehouse Daily Flow =	8.06	L/m2/day
Restaurant (Ordinary not 24 Hours) =	125	L/seat/d
Restaurant (24 Hours) =	200	L/seat/d
Shopping Centres =	2,500	L/(1000m^2/d)
Amenity Area =	5	L/m2/d

Maximum Daily Demand

Residential =	2.5 x Average Daily Demand
	4.9 x Average Daily Demand **
Industrial =	1.5 x Average Daily Demand
Commercial =	1.5 x Average Daily Demand
Institutional =	1.5 x Average Daily Demand

Peak Hourly Demand

Residential =	2.2 x Maximum Daily Demand
	7.4 x Maximum Daily Demand **
Industrial =	1.8 x Maximum Daily Demand
Commercial =	1.8 x Maximum Daily Demand
Institutional =	1.8 x Maximum Daily Demand

1660 Merivalve Rd. Harnois Énergie - Gas Station

Building	Type of Construction C	Total Floor Area (m2) A	Fire Flow (min. 2,000) (L/min) F	Adjusted (nearest 1,000) (L/min)	Occupancy Factor O	Reduction / Increase due to Occupancy	Fire Flow with Occupancy (min. 2,000) (L/min)	Sprinklers Factor S	Reduction due to Sprinklers (L/min)	Exposure Factor % E	Increase due to Exposure (L/min)	Fire Flow (L/min)	Roof Contribution (L/min) R	Required Fire Demand: Adjusted to the nearest 1000 (min. 2,000, max. 45,000) (L/min) F	Required Fire Demand: Minimum 33 (L/s)
Existing Building B	0.8	107	1,821	2,000	0%	0	2,000	0%	0	35%	700	3,000	0	3,000	50
Proposed Building A	0.8	521	4,017	4,000	0%	0	4,000	0%	0	20%	800	5,000	0	5,000	83

Reference:

References
Water Supply for Public Fire Protection , 2020 by Fire Underwriters Survey (FUS) and
Ottawa Design Guidelines - Water Distribution, July 2010 and subsequent Technical Bulletins

C Type of Construction

Wood Frame (Type V)	1.5
Mass Timber (Type IV-A) - Encapsulated Mass Timber	0.8
Mass Timber (Type IV-B) - Rated Mass Timber	0.9
Mass Timber (Type IV-C) - Ordinary Mass Timber	1.0
Mass Timber (Type IV-D) - Unrated Mass Timber	1.5
Ordinary Construction (Type III also known as joisted masonry)	1.0
Non-Combustible Construction (Type II - minimum 1 hour fire resistance rating)	0.8
Fire resistive Construction (Type I - minimum 2 hour fire resistance rating)	0.6

A Total Effective Floor Area (m^2)

Buildings Classified with a Construction Coefficient from 1.0 to 1.5
100% of all Floor Areas

Buildings Classified with a Construction Coefficient below 1.0
Vertical Openings Unprotected
Two (2) Largest Adjoining Floor Areas
Additional Floors (up to eight (8)) at 50%

Vertical Openings Properly Protected
Single Largest Floor
Additional Two (2) Adjoining Floors at 25%

High One Storey Building
When a building has a large single storey space exceeding 3m in height, the number of storeys to be used in determining the total effective area depends upon the use being made of the building.

Subdividing Buildings (Vertical Firewalls)
Minimum two (2) hour fire resistance rating and meets National Building Code requirements.

- Up to 10% can be applied if there is severe risk of fire on the exposed side of the firewall due to hazard conditions.
- An exposure charge of up to 10% can be applied if there are unprotected openings in the firewall

Basement
Basement floor excluded when it is at least 50% below grade.

Open Parking Garages
Use the area of the largest floor.

O Occupancy

Non-Combustible	-25%
Limited Combustible	-15%
Combustible	0%
Free Burning	15%
Rapid Burning	25%

- Table 3 provides recommended Occupancy and Contents Adjustment Factors for Example Major Occupancies from the National Building Code of Canada.
- Adjustment factors should be adjusted accordingly to the specific fore loading and situation that exists in the subject building.
- Values can be interpolated from the examples given considering fire loading and expected combustibility of contents if the subject building is not listed.
- Values can be modified by up to 10% (+/-) depending on the extent to which the fire loading is unusual for the building.
- Buildings with multiple major occupancies should use the most restrictive factor or interpolate based on the percentage of each occupancy and its associated fire loading.

Table 3 Values for Subject Building

Group:	E
Division:	
Description of Occupancy:	Shops/Stores
Occupancy and Contents:	Combustible
Adjustment Factor:	0%

R Roof

Shake Roof	2,000 to 4,000 L/min	additional should be added to the fire flow
Wood Shingle	2,000 to 4,000 L/min	additional should be added to the fire flow

F Fire Flow (L/Min)

220*C*(A^0.5)

S Sprinklers

	Complete Coverage	Partial Coverage
Automatic Sprinklers NFPA Standards	30%	30% * x%
Standard Water Supply	10%	10% * x%
Full Supervision	10%	10% * x%

(x%: percentage of total protected floor area)

Additional Reductions for Community Level Automatic Sprinkler Protection of Area
Buildings located within communities or subdivisions that are completely sprinkler protected may apply up to a maximum additional 25% reduction in required fire flows beyond the normal maximum of 50% reduction for sprinkler protection of an individual building.

Adjustment of Sprinkler Reductions for Community Level Oversight of Sprinkler Maintenance, Testing, and Water Supply Requirements
The reduction in required fire flow for sprinkler protection may be reduced of eliminated if:
- The community does not have a Fire Prevention Program that provides a system of ensuring that the fire sprinkler systems are inspected, tested, and maintained in accordance with NFPA 25
- The community does not maintain the pressure and flow rate requirements for fire sprinkler installations, or otherwise allows the flow rates and pressure levels that were available during sprinkler system design to significantly degrade, increasing the probability of inadequate water supply for effective sprinkler operation.

E Exposure
The maximum exposure adjustment that can be applied to a building is 75% when summing the percentages of all sides of the building

Separation Distance (m)	Maximum Exposure Adjustment	N	E	S	W
0 to 3	25%				
3.1 to 10	20%				
10.1 to 20	15%				
20.1 to 30	10%				
Greater than 30	0%				

Table 6: Exposure Adjustment Charges for Subject Building Considering Construction Type of Exposed Building Face

Distance to the Exposure (m)	Length-Height Factor of Exposing Building Face	Type V	Type III-IV[2]	Type III-IV[3]	Type I-II[2]	Type I-II[3]
0 to 3	0-20	20%	15%	5%	10%	0%
	21-40	21%	16%	6%	11%	1%
	41-60	22%	17%	7%	12%	2%
	61-80	23%	18%	8%	13%	3%
	81-100	24%	19%	9%	14%	4%
	Over 100	25%	20%	10%	15%	5%
3.1 to 10	0-20	15%	10%	3%	6%	0%
	21-40	16%	11%	4%	7%	0%
	41-60	17%	12%	5%	8%	1%
	61-80	18%	13%	6%	9%	2%
	81-100	19%	14%	7%	10%	3%
	Over 100	20%	15%	8%	11%	4%
10.1 to 20	0-20	10%	5%	0%	3%	0%
	21-40	11%	6%	1%	4%	0%
	41-60	12%	7%	2%	5%	0%
	61-80	13%	8%	3%	6%	1%
	81-100	14%	9%	4%	7%	2%
	Over 100	15%	10%	5%	8%	3%
20.1 to 30	0-20	0%	0%	0%	0%	0%
	21-40	2%	1%	0%	0%	0%
	41-60	4%	2%	0%	1%	0%
	61-80	6%	3%	1%	2%	0%
	81-100	8%	4%	2%	3%	0%
	Over 100	10%	5%	3%	4%	0%
Over 30m	All Sizes	0%	0%	0%	0%	0%

[2] with unprotected openings
[3] without unprotected openings

Automatic Sprinkler Protection in Exposed Buildings
- If the exposed building is fully protected with an automatic sprinkler system (see note Recognition of Automatic Sprinkler), the exposure adjustment charge determined from Table 6 may be reduced by up to 50% of the value determined.

Automatic Sprinkler Protection in both Subject and Exposed Buildings
- If both the subject building and the exposed building are fully protected with automatic sprinkler systems (see note Recognition of Automatic Sprinkler), no exposure adjustment charge should be applied.

Exposure Protection of Area Between Subject and Exposed Buildings
- If the exposed building is fully protected with an automatic sprinkler system (see note Recognition of Automatic Sprinkler), and the area between the buildings is protected with an exterior automatic sprinkler system, no exposure adjustment charge should be applied

Reduction of Exposure Charge for Type V Buildings
- If the exposed building face of a Type V building has an exterior cladding assembly with a minimum 1 hour fire resistive rating, then the exposure charge may be treated as a Type III/IV building for the purposes of looking up the appropriate exposure charge in Table 6.

Appendix D

Stormwater Storage Closed Pipe System Specifications

PARSONS

PROJECT INFORMATION	
ENGINEERED PRODUCT MANAGER:	HAIDER NASRULLAH 647-850-9417 HAIDER.NASRULLAH@ADSPIPE.COM
ADS SALES REP:	BRAD DUNLOP 613-893-7336 BRAD.DUNLOP@ADSPIPE.COM
PROJECT NO:	S393464
ADS SITE COORDINATOR:	RYAN RUBENSTEIN 519-710-3687 RYAN.RUBENSTEIN@ADS-PIPE.COM

Advanced Drainage Systems, Inc.

1660 MERIVALE

OTTAWA, ON

ADS RETENTION/DETENTION PIPE SYSTEM SPECIFICATION

SCOPE
THIS SPECIFICATION DESCRIBES ADS RETENTION/DETENTION PIPE SYSTEMS FOR USE IN NON-PRESSURE GRAVITY-FLOW STORM WATER COLLECTION SYSTEMS UTILIZING A CONTINUOUS OUTFALL STRUCTURE.

PIPE REQUIREMENTS
ADS RETENTION/DETENTION SYSTEMS MAY UTILIZE ANY OF THE VARIOUS PIPE PRODUCTS BELOW:

- N-12® WTIB PIPE (PER AASHTO) SHALL MEET AASHTO M 294, TYPE S OR ASTM F2306
- N-12® WTIB PIPE (PER ASTM F2648) SHALL MEET ASTM F2648
- N-12® MEGA GREEN™ WTIB SHALL MEET ASTM F2648

ALL PRODUCTS SHALL HAVE A SMOOTH INTERIOR AND ANNULAR EXTERIOR CORRUGATIONS. ALL STIB PIPE PRODUCTS ARE AVAILABLE AS PERFORATED OR NON-PERFORATED. WTIB PIPE PRODUCTS ARE ONLY AVAILABLE AS NON-PERFORATED. PRODUCT-SPECIFIC PIPE SPECIFICATIONS ARE AVAILABLE IN THE DRAINAGE HANDBOOK SECTION 1 "SPECIFICATIONS".

JOINT PERFORMANCE
WATERTIGHT (WTIB):
WTIB PIPE SHALL BE JOINED USING A BELL AND SPIGOT JOINT. THE JOINT SHALL BE WATERTIGHT ACCORDING TO THE REQUIREMENTS OF ASTM D3212. GASKETS SHALL MEET THE REQUIREMENTS OF ASTM F477. 12-60 INCH (300-1500 mm) DIAMETERS SHALL HAVE A BELL REINFORCED WITH A POLYMER COMPOSITE BAND. THE BELL TOLERANCE DEVICE SHALL BE INSTALLED BY THE MANUFACTURER.

PIPE AND FITTING CONNECTIONS SHALL BE WITH A BELL AND SPIGOT CONNECTION UTILIZING A SPUN-ON OR WELDED BELL AND VALLEY OR SADDLE GASKET. THE JOINT SHALL MEET THE WATERTIGHT REQUIREMENTS OF ASTM D3212, AND GASKETS SHALL MEET THE REQUIREMENTS OF ASTM F477. DETENTION SYSTEMS ARE SUBJECT TO GREATER LEAKAGE THAN TYPICAL SINGLE RUN STORM SEWER APPLICATIONS AND THEREFORE ARE NOT APPROPRIATE FOR APPLICATIONS REQUIRING LONG-TERM FLUID CONTAINMENT OR HYDROSTATIC PRESSURE. FOR ADDITIONAL DETAILS REFER TO TECHNICAL NOTE 7.01 "RAINWATER HARVESTING WITH HDPE PIPE CISTERNS".

FITTINGS
FITTINGS SHALL CONFORM TO ASTM F2306 AND MEET JOINT PERFORMANCE INDICATED ABOVE FOR FITTINGS CONNECTIONS. CUSTOM FITTINGS ARE AVAILABLE AND MAY REQUIRE SPECIAL INSTALLATION CRITERION.

INSTALLATION
INSTALLATION SHALL BE IN ACCORDANCE WITH ASTM D2321 AND ADS RECOMMENDED INSTALLATION GUIDELINES, WITH THE EXCEPTION THAT MINIMUM COVER IN NON-TRAFFIC AREAS FOR 12-60 INCH (300-1500 mm) DIAMETERS SHALL BE 1 FT (0.3 m). MINIMUM COVER IN TRAFFICKED AREAS FOR 12-36 INCH (300-900 mm) DIAMETERS SHALL BE 1 FT (0.3 m) AND FOR 42-60 INCH (1050-1500 mm) DIAMETERS, THE MINIMUM COVER SHALL BE 2 FT (0.6 m). BACKFILL SHALL CONSIST OF CLASS I (COMPACTED) OR CLASS II (MINIMUM 95% SPD) MATERIAL, WITH THE EXCEPTION THAT 60 INCH (1500 mm) SYSTEMS SHALL USE CLASS I MATERIAL ONLY. MINIMUM COVER HEIGHTS DO NOT ACCOUNT FOR PIPE BUOYANCY. REFER TO ADS TECHNICAL NOTE 5.05 "PIPE FLOTATION" FOR BUOYANCY DESIGN CONSIDERATIONS. MAXIMUM COVER OVER SYSTEM USING STANDARD BACKFILL IS 8 FT (2.4 m); CONTACT A REPRESENTATIVE WHEN MAXIMUM FILL HEIGHT MAY BE EXCEEDED. ADDITIONAL INSTALLATION REQUIREMENTS ARE PROVIDED IN THE DRAINAGE HANDBOOK SECTION 6 "RETENTION/DETENTION".

ADS RECOMMENDS THE USE OF "FLEXSTORM CATCH IT" INSERTS DURING CONSTRUCTION FOR ALL INLETS TO PROTECT THE SUBSURFACE STORMWATER MANAGEMENT SYSTEM FROM CONSTRUCTION SITE RUNOFF.

NOTES:

1) ALL ELEVATIONS, DIMENSIONS AND LOCATIONS OF RISERS, INLETS AND OUTLETS, SHALL BE VERIFIED BY THE ENGINEER PRIOR TO RELEASING FOR FABRICATION.

2) IN SITUATIONS WHERE A FINE-GRAINED BACKFILL MATERIAL IS USED ADJACENT TO THE PIPE SYSTEM, AND ESPECIALLY INVOLVING GROUND WATER CONDITIONS, CONSIDERATION SHOULD BE GIVEN TO THE USE OF GASKETED PIPE JOINTS. AT THE VERY LEAST THE PIPE JOINTS SHOULD BE WRAPPED IN A SUITABLE, NON-WOVEN GEOTEXTILE FABRIC TO PREVENT INFILTRATION OF FINES INTO THE PIPE SYSTEM.

3) CONSIDERATION FOR CONSTRUCTION EQUIPMENT LOADS MUST BE TAKEN INTO ACCOUNT.

4) ALL PIPE DIMENSIONS ARE SUBJECT TO MANUFACTURERS TOLERANCES.

5) ALL RISERS TO BE FIELD EXTENDED OR TRIMMED TO FINAL GRADE.

THE UNDERSIGNED HERBY APPROVES THE ATTACHED PAGES.

CUSTOMER DATE

©2023 ADS, INC.

BILL OF MATERIALS

*THE COMPONENTS AND QUANTITIES LISTED HEREIN ARE NOT INTENDED TO BE A COMPREHENSIVE MATERIAL LIST.
EXTRA COMPONENTS, NOT LISTED HEREIN, MAY BE NECESSARY TO COMPLETE THE CONSTRUCTION OF THE SYSTEM.

ITEM	QTY.	PART #	DESCRIPTION	MATERIAL	VENDOR	NOTE
1	1	MANIFOLD-1	42" SINGLE MANIFOLD TEE	HDPE	ADS	SEE DETAIL
2	1	MANIFOLD-2	42" SINGLE MANIFOLD TEE	HDPE	ADS	SEE DETAIL
3	2	BEND-1	42" X 90° MANIFOLD BEND	HDPE	ADS	SEE DETAIL
4	1	BEND-2	42" X 90° MANIFOLD BEND	HDPE	ADS	SEE DETAIL
5	1	BEND-3	42" X 90° MANIFOLD BEND	HDPE	ADS	SEE DETAIL
6	15	4265-0020IB	42" PIPE STICK : SOLID	HDPE	ADS	WTIB
7	1	TBD	10" INSERTA TEE	VARIES	ADS	FIELD LOCATE
8	1	TBD BY ENGINEER	ADS GEOTEXTILE FABRIC	AS SPECIFIED	ADS	AS NEEDED
9	3	STICK-1	42" PIPE STICK : SOLID	HDPE	ADS	WTIB

NOTES

- STUB SIZES AND INVERTS TO BE VERIFIED BY THE SITE DESIGN ENGINEER PRIOR TO FABRICATION.
- **SYSTEM VOLUME** : 100.3 m3

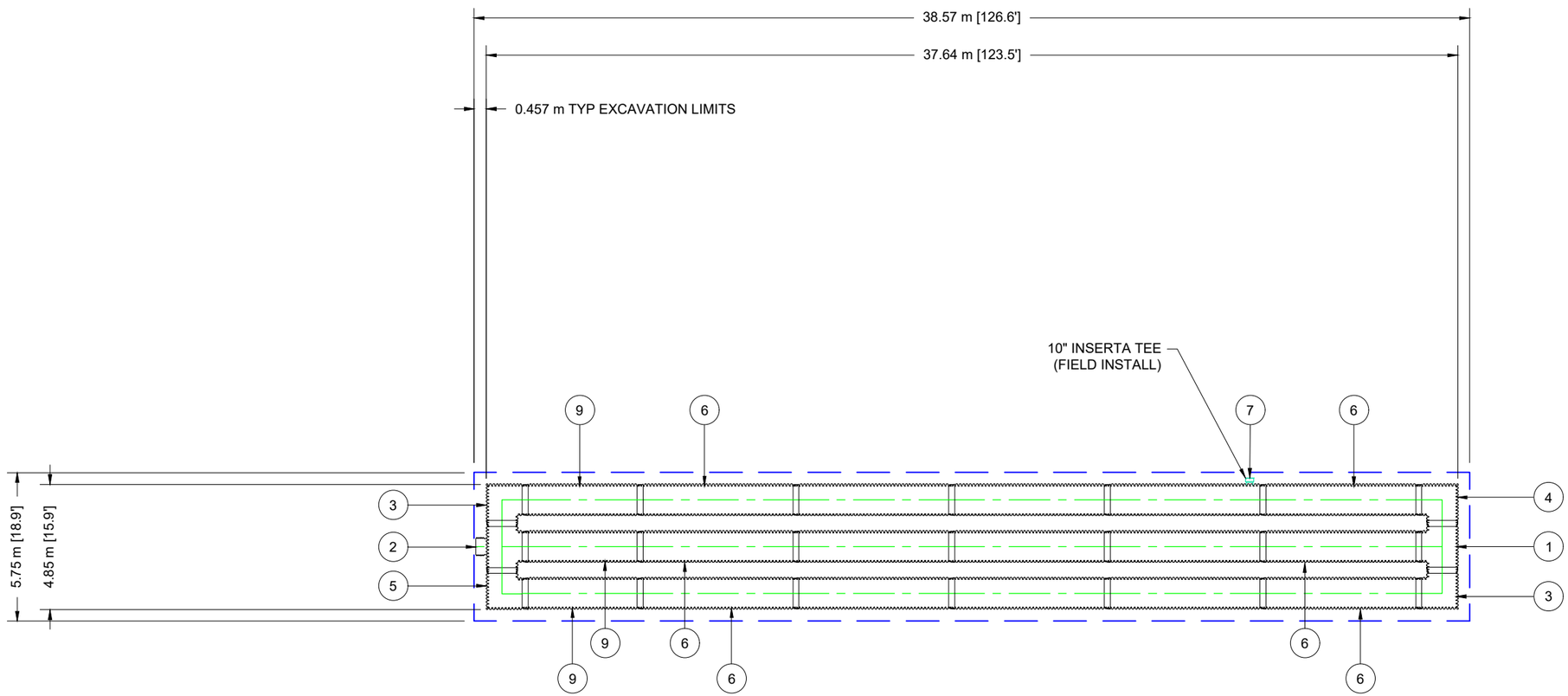

ADS GEOTEXTILE FABRIC
(IF REQUIRED BY SITE DESIGN ENGINEER)

1660 MERIVALE
OTTAWA, ON

DATE: 1-24-24 DRAWN: BRE
PROJECT #: S393464 CHECKED: WCM

DATE	DRWN	CHKD	DESCRIPTION
8/13/25	VRE	HAK	REVISED PER COMMENTS
10/11/24	BRE	RWD	REVISED PER NEW PLAN

1050 MM WTIB : SOLID
RETENTION
LandMax
Stormwater Management System

ADS
4640 TRUEMAN BLVD
HILLIARD, OH 43026

SCALE = 1 : 200

SHEET 2 OF 4

THIS DRAWING HAS BEEN PREPARED BASED ON INFORMATION PROVIDED TO ADS UNDER THE DIRECTION OF THE SITE DESIGN ENGINEER OR OTHER PROJECT REPRESENTATIVE. THE SITE DESIGN ENGINEER SHALL REVIEW THIS DRAWING PRIOR TO CONSTRUCTION. IT IS THE ULTIMATE RESPONSIBILITY OF THE SITE DESIGN ENGINEER TO ENSURE THAT THE PRODUCT(S) DEPICTED AND ALL ASSOCIATED DETAILS MEET ALL APPLICABLE LAWS, REGULATIONS, AND PROJECT REQUIREMENTS.

1050 mm X 90° MANIFOLD BEND

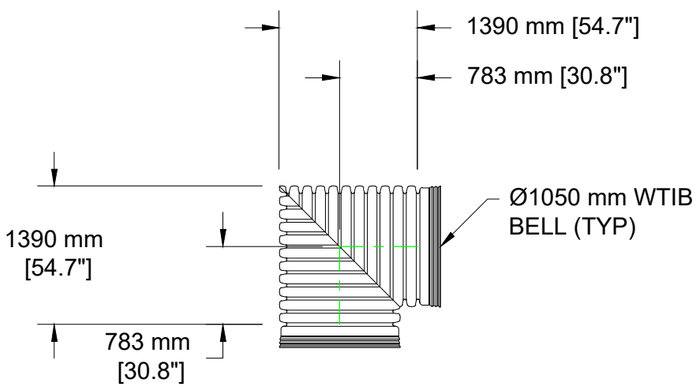

ITEM #: 5
QTY: 1
BEND-3

1050 mm X 90° MANIFOLD BEND

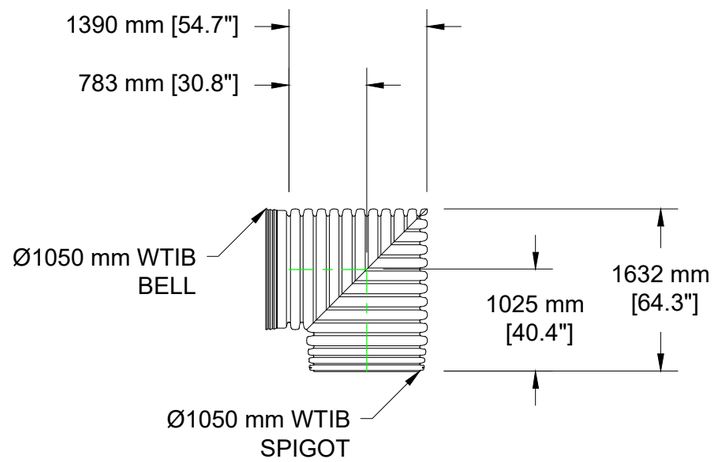

ITEM #: 3
QTY: 2
BEND-1

1050 mm SINGLE MANIFOLD TEE

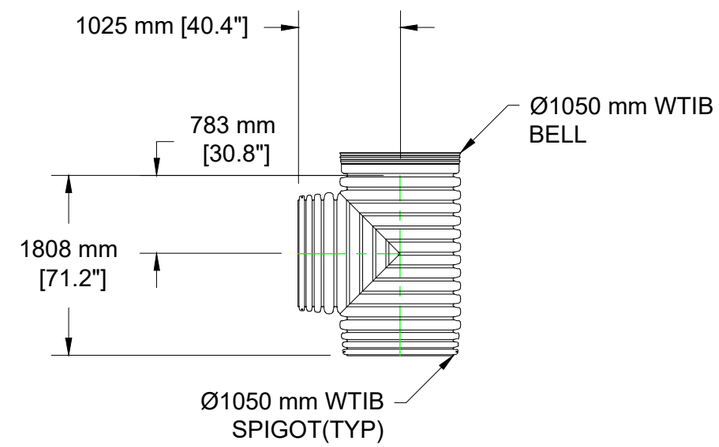

ITEM #: 1
QTY: 1
MANIFOLD-1

1050 mm PIPE STICK : SOLID (SPLICE REQUIRED)

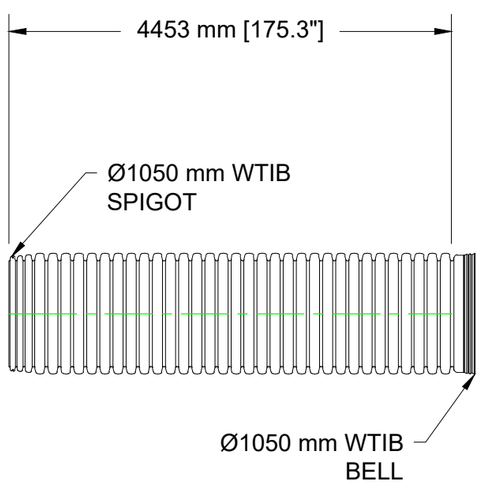

ITEM #: 9
QTY: 3
STICK-1

1050 mm X 90° MANIFOLD BEND

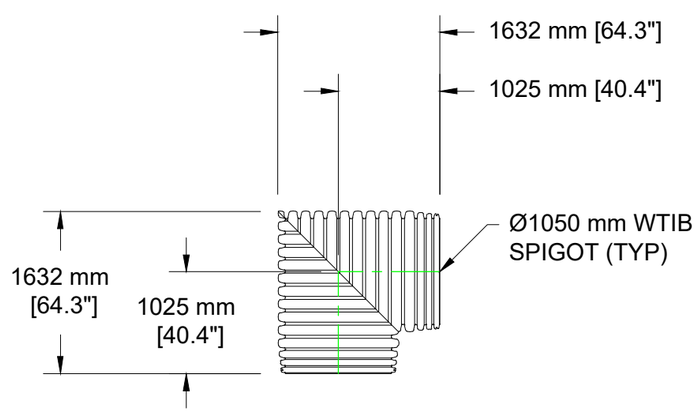

ITEM #: 4
QTY: 1
BEND-2

1050 mm SINGLE MANIFOLD TEE W/ 600 mm STUB

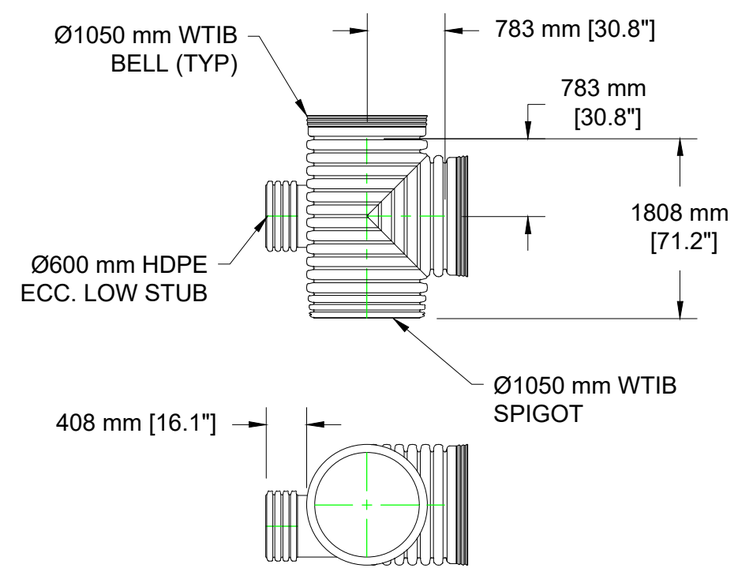

ITEM #: 2
QTY: 1
MANIFOLD-2

1660 MERIVALE
OTTAWA, ON

DATE: 1-24-24 DRAWN: BRE
PROJECT #: S393464 CHECKED: WCM

DATE	DRWN	CHKD	DESCRIPTION
8/13/25	VRE	HAK	REVISED PER COMMENTS
10/11/24	BRE	RWD	REVISED PER NEW PLAN

1050 MM WTIB : SOLID
RETENTION
LandMax
Stormwater Management System

4640 TRUEMAN BLVD
HILLIARD, OH 43026

ADS

SHEET 3 OF 4

THIS DRAWING HAS BEEN PREPARED BASED ON INFORMATION PROVIDED TO ADS UNDER THE DIRECTION OF THE SITE DESIGN ENGINEER OR OTHER PROJECT REPRESENTATIVE. THE SITE DESIGN ENGINEER SHALL REVIEW THIS DRAWING PRIOR TO CONSTRUCTION. IT IS THE ULTIMATE RESPONSIBILITY OF THE SITE DESIGN ENGINEER TO ENSURE THAT THE PRODUCT(S) DEPICTED AND ALL ASSOCIATED DETAILS MEET ALL APPLICABLE LAWS, REGULATIONS, AND PROJECT REQUIREMENTS.

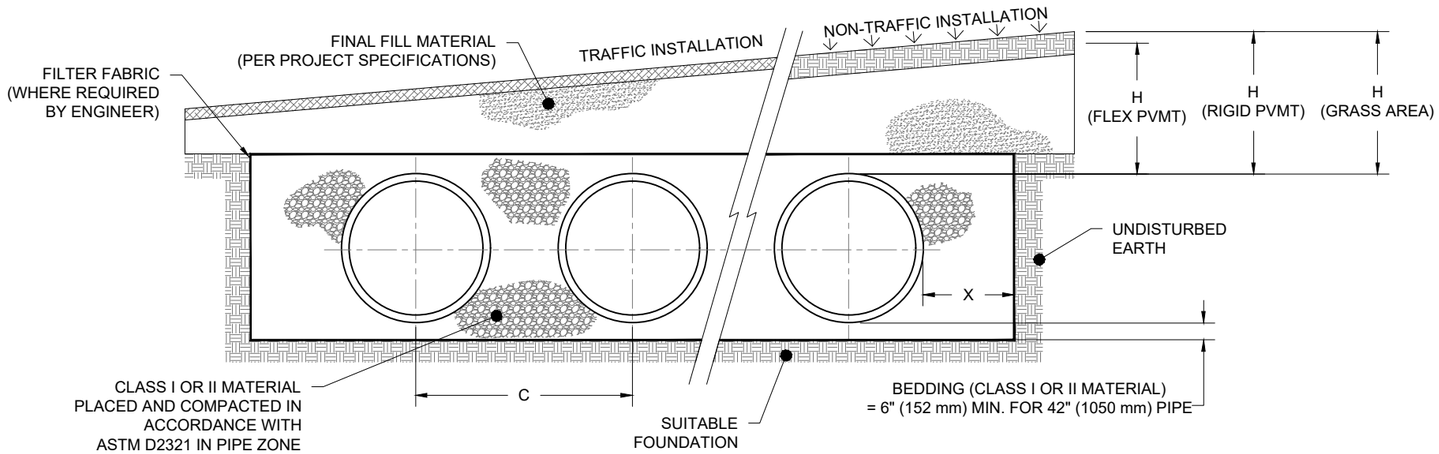

NOMINAL DIAMETER	NOMINAL O.D.	STANDARD SPACING "C"	TYPICAL SIDE WALL "X"	MIN. H (NON-TRAFFIC)	MIN. H (TRAFFIC)	MAX. H*
42" (1050 mm)	48" (1219 mm)	72" (1829 mm)	18" (457 mm)	12" (305 mm)	24" (610 mm)	8' (2.4 m)

* MAXIMUM FILL HEIGHTS OVER MANIFOLD FITTINGS. CONTACT MANUFACTURER'S REPRESENTATIVE FOR INSTALLATION CONSIDERATIONS WHEN COVER EXCEEDS 8 FT (2.4 m).

NOTES:

1. ALL REFERENCES TO CLASS I OR II MATERIAL ARE PER ASTM D2321 "STANDARD PRACTICE FOR UNDERGROUND INSTALLATION OF THERMOPLASTIC PIPE FOR SEWERS AND OTHER GRAVITY FLOW APPLICATIONS", LATEST EDITION.

2. ALL RETENTION AND DETENTION SYSTEMS SHALL BE INSTALLED IN ACCORDANCE WITH ASTM D2321, LATEST EDITION AND THE MANUFACTURER'S PUBLISHED INSTALLATION GUIDELINES.

3. MEASURES SHOULD BE TAKEN TO PREVENT THE MIGRATION OF NATIVE FINES INTO THE BACKFILL MATERIAL, WHEN REQUIRED. SEE ASTM D2321.

4. FILTER FABRIC: A GEOTEXTILE FABRIC MAY BE USED AS SPECIFIED BY THE ENGINEER TO PREVENT THE MIGRATION OF FINES FROM THE NATIVE SOIL INTO THE SELECT BACKFILL MATERIAL.

5. FOUNDATION: WHERE THE TRENCH BOTTOM IS UNSTABLE. THE CONTRACTOR SHALL EXCAVATE TO A DEPTH REQUIRED BY THE ENGINEER AND REPLACE WITH SUITABLE MATERIAL AS SPECIFIED BY THE ENGINEER. AS AN ALTERNATIVE AND AT THE DISCRETION OF THE DESIGN ENGINEER, THE TRENCH BOTTOM MAY BE STABILIZED USING A GEOTEXTILE MATERIAL.

6. BEDDING: SUITABLE MATERIAL SHALL BE CLASS I OR II. THE CONTRACTOR SHALL PROVIDE DOCUMENTATION FOR MATERIAL SPECIFICATION TO ENGINEER. UNLESS OTHERWISE NOTED BY THE ENGINEER, MINIMUM BEDDING THICKNESS SHALL BE 4" (102 mm) FOR 4"-24" (100-600 mm); 6" (152 mm) FOR 30-60" (750-1500 mm).

7. INITIAL BACKFILL: SUITABLE MATERIAL SHALL BE CLASS I OR II IN THE PIPE ZONE EXTENDING NOT LESS THAN 6" (152 mm) ABOVE CROWN OF PIPE. THE CONTRACTOR SHALL PROVIDE DOCUMENTATION FOR MATERIAL SPECIFICATION TO ENGINEER. MATERIAL SHALL BE INSTALLED AS REQUIRED IN ASTM D2321, LATEST EDITION.

8. COVER: MINIMUM COVER OVER ALL RETENTION/DETENTION SYSTEMS IN NON-TRAFFIC APPLICATIONS (GRASS OR LANDSCAPE AREAS) IS 12" (305 mm) FROM TOP OF PIPE TO GROUND SURFACE. ADDITIONAL COVER MAY BE REQUIRED TO PREVENT FLOATATION. FOR TRAFFIC APPLICATIONS, MINIMUM COVER IS 12" (305 mm) UP TO 36" (900 mm) DIAMETER PIPE AND 24" (610 mm) OF COVER FOR 42-60" (1050-1500 mm) DIAMETER PIPE, MEASURED FROM TOP OF PIPE TO BOTTOM OF FLEXIBLE PAVEMENT OR TO TOP OF RIGID PAVEMENT. MAXIMUM FILL HEIGHT LIMITED TO 8 FT (2.4 m) OVER FITTINGS FOR STANDARD INSTALLATIONS. CONTACT A SALES REPRESENTATIVE WHEN MAXIMUM FILL HEIGHTS EXCEED 8 FT (2.4 m) FOR INSTALLATION CONSIDERATIONS.

1660 MERIVALE
OTTAWA, ON

DATE: 1-24-24 DRAWN: BRE
PROJECT #: S393464 CHECKED: WCM

DATE	DRWN	CHKD	DESCRIPTION
8/13/25	VRE	HAK	REVISED PER COMMENTS
10/11/24	BRE	RWD	REVISED PER NEW PLAN

1050 MM WTIB : SOLID RETENTION
LandMax
Stormwater Management System

ADS
4640 TRUEMAN BLVD
HILLIARD, OH 43026

THIS DRAWING HAS BEEN PREPARED BASED ON INFORMATION PROVIDED TO ADS UNDER THE DIRECTION OF THE SITE DESIGN ENGINEER OR OTHER PROJECT REPRESENTATIVE. THE SITE DESIGN ENGINEER SHALL REVIEW THIS DRAWING PRIOR TO CONSTRUCTION. IT IS THE ULTIMATE RESPONSIBILITY OF THE SITE DESIGN ENGINEER TO ENSURE THAT THE PRODUCT(S) DEPICTED AND ALL ASSOCIATED DETAILS MEET ALL APPLICABLE LAWS, REGULATIONS, AND PROJECT REQUIREMENTS.

Appendix E

Stormceptor Design and Specifications

PARSONS

Stormceptor® EF Sizing Report

Imbrium® Systems
ESTIMATED NET ANNUAL SEDIMENT (TSS) LOAD REDUCTION

02/13/2024

Province:	Ontario
City:	Ottawa
Nearest Rainfall Station:	OTTAWA CDA RCS
Climate Station Id:	6105978
Years of Rainfall Data:	20

Project Name:	Harnois Energie - Merivale
Project Number:	478684
Designer Name:	Patrick Charlebois
Designer Company:	Parsons
Designer Email:	pchar084@gmail.com
Designer Phone:	647-207-8063
EOR Name:	
EOR Company:	
EOR Email:	
EOR Phone:	

Site Name:	Harnois Energie
Drainage Area (ha):	0.62
% Imperviousness:	57.38

Runoff Coefficient 'c': 0.64

Particle Size Distribution:	Fine
Target TSS Removal (%):	80.0
Required Water Quality Runoff Volume Capture (%):	90.00
Estimated Water Quality Flow Rate (L/s):	12.89
Oil / Fuel Spill Risk Site?	Yes
Upstream Flow Control?	Yes
Upstream Orifice Control Flow Rate to Stormceptor (L/s):	32.90
Peak Conveyance (maximum) Flow Rate (L/s):	44.30
Influent TSS Concentration (mg/L):	200
Estimated Average Annual Sediment Load (kg/yr):	416
Estimated Average Annual Sediment Volume (L/yr):	338

Net Annual Sediment (TSS) Load Reduction Sizing Summary

Stormceptor Model	TSS Removal Provided (%)
EFO4	86
EFO6	94
EFO8	97
EFO10	99
EFO12	100

Recommended Stormceptor EFO Model:	**EFO4**
Estimated Net Annual Sediment (TSS) Load Reduction (%):	**86**
Water Quality Runoff Volume Capture (%):	**> 90**

THIRD-PARTY TESTING AND VERIFICATION

►**Stormceptor® EF and Stormceptor® EFO** are the latest evolutions in the Stormceptor® oil-grit separator (OGS) technology series, and are designed to remove a wide variety of pollutants from stormwater and snowmelt runoff. These technologies have been third-party tested in accordance with the Canadian ETV **Procedure for Laboratory Testing of Oil-Grit Separators** and performance has been third-party verified in accordance with the **ISO 14034 Environmental Technology Verification (ETV)** protocol.

PERFORMANCE

►**Stormceptor® EF and EFO** remove stormwater pollutants through gravity separation and floatation, and feature a patent-pending design that generates positive removal of total suspended solids (TSS) throughout each storm event, including high-intensity storms. Captured pollutants include sediment, free oils, and sediment-bound pollutants such as nutrients, heavy metals, and petroleum hydrocarbons. Stormceptor is sized to remove a high level of TSS from the frequent rainfall events that contribute the vast majority of annual runoff volume and pollutant load. The technology incorporates an internal bypass to convey excessive stormwater flows from high-intensity storms through the device without resuspension and washout (scour) of previously captured pollutants. Proper routine maintenance ensures high pollutant removal performance and protection of downstream waterwavs.

PARTICLE SIZE DISTRIBUTION (PSD)

►The **Canadian ETV PSD** shown in the table below was used, or in part, for this sizing. This is the identical PSD that is referenced in the Canadian ETV ***Procedure for Laboratory Testing of Oil-Grit Separators*** for both sediment removal testing and scour testing. The Canadian ETV PSD contains a wide range of particle sizes in the sand and silt fractions, and is considered reasonably representative of the particle size fractions found in typical urban stormwater runoff.

Particle Size (µm)	Percent Less Than	Particle Size Fraction (µm)	Percent
1000	100	500-1000	5
500	95	250-500	5
250	90	150-250	15
150	75	100-150	15
100	60	75-100	10
75	50	50-75	5
50	45	20-50	10
20	35	8-20	15
8	20	5-8	10
5	10	2-5	5
2	5	<2	5

Upstream Flow Controlled Results

Rainfall Intensity (mm / hr)	Percent Rainfall Volume (%)	Cumulative Rainfall Volume (%)	Flow Rate (L/s)	Flow Rate (L/min)	Surface Loading Rate (L/min/m²)	Removal Efficiency (%)	Incremental Removal (%)	Cumulative Removal (%)
0.50	8.6	8.6	0.56	33.0	28.0	100	8.6	8.6
1.00	20.3	29.0	1.11	67.0	56.0	100	20.3	29.0
2.00	16.2	45.2	2.22	133.0	111.0	95	15.3	44.3
3.00	12.0	57.2	3.33	200.0	167.0	88	10.6	54.9
4.00	8.4	65.6	4.44	267.0	222.0	82	6.9	61.8
5.00	5.9	71.6	5.55	333.0	278.0	80	4.7	66.6
6.00	4.6	76.2	6.66	400.0	333.0	77	3.6	70.1
7.00	3.1	79.3	7.77	466.0	389.0	75	2.3	72.4
8.00	2.7	82.0	8.88	533.0	444.0	72	2.0	74.4
9.00	3.3	85.3	9.99	600.0	500.0	69	2.3	76.7
10.00	2.3	87.6	11.10	666.0	555.0	67	1.5	78.3
11.00	1.6	89.2	12.22	733.0	611.0	65	1.0	79.3
12.00	1.3	90.5	13.33	800.0	666.0	64	0.8	80.1
13.00	1.7	92.2	14.44	866.0	722.0	64	1.1	81.2
14.00	1.2	93.5	15.55	933.0	777.0	63	0.8	82.0
15.00	1.2	94.6	16.66	999.0	833.0	63	0.7	82.7
16.00	0.7	95.3	17.77	1066.0	888.0	62	0.4	83.1
17.00	0.7	96.1	18.88	1133.0	944.0	62	0.5	83.6
18.00	0.4	96.5	19.99	1199.0	999.0	62	0.2	83.8
19.00	0.4	96.9	21.10	1266.0	1055.0	60	0.2	84.1
20.00	0.2	97.1	22.21	1333.0	1110.0	59	0.1	84.2
21.00	0.5	97.5	23.32	1399.0	1166.0	58	0.3	84.5
22.00	0.2	97.8	24.43	1466.0	1222.0	56	0.1	84.6
23.00	1.0	98.8	25.54	1532.0	1277.0	55	0.6	85.2
24.00	0.3	99.1	26.65	1599.0	1333.0	54	0.1	85.3
25.00	0.9	100.0	27.76	1666.0	1388.0	53	0.5	85.8
30.00	0.0	100.0	33.00	1980.0	1650.0	44	0.0	85.8
35.00	0.0	100.0	33.00	1980.0	1650.0	44	0.0	85.8
40.00	0.0	100.0	33.00	1980.0	1650.0	44	0.0	85.8
45.00	0.0	100.0	33.00	1980.0	1650.0	44	0.0	85.8
Estimated Net Annual Sediment (TSS) Load Reduction =								**86 %**

Climate Station ID: 6105978 *Years of Rainfall Data*: 20

RAINFALL DATA FROM OTTAWA CDA RCS RAINFALL STATION

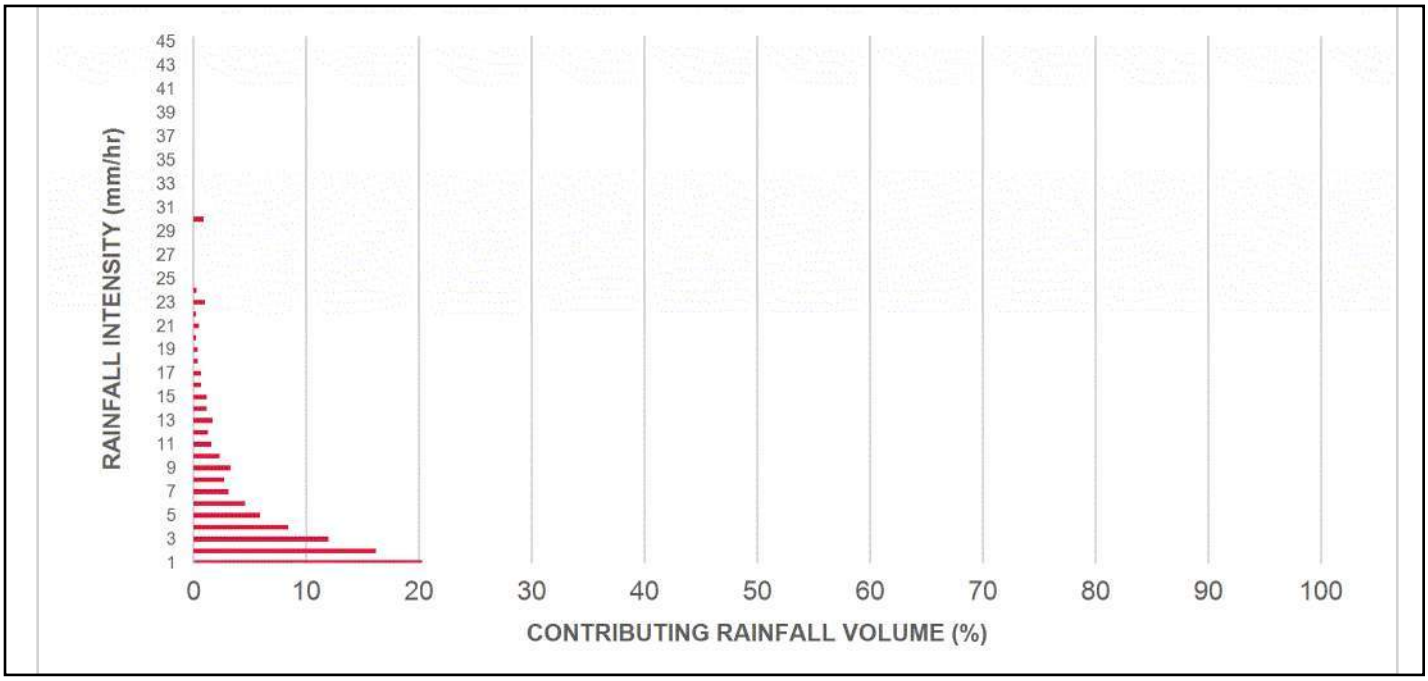

INCREMENTAL AND CUMULATIVE TSS REMOVAL FOR THE RECOMMENDED STORMCEPTOR® MODEL

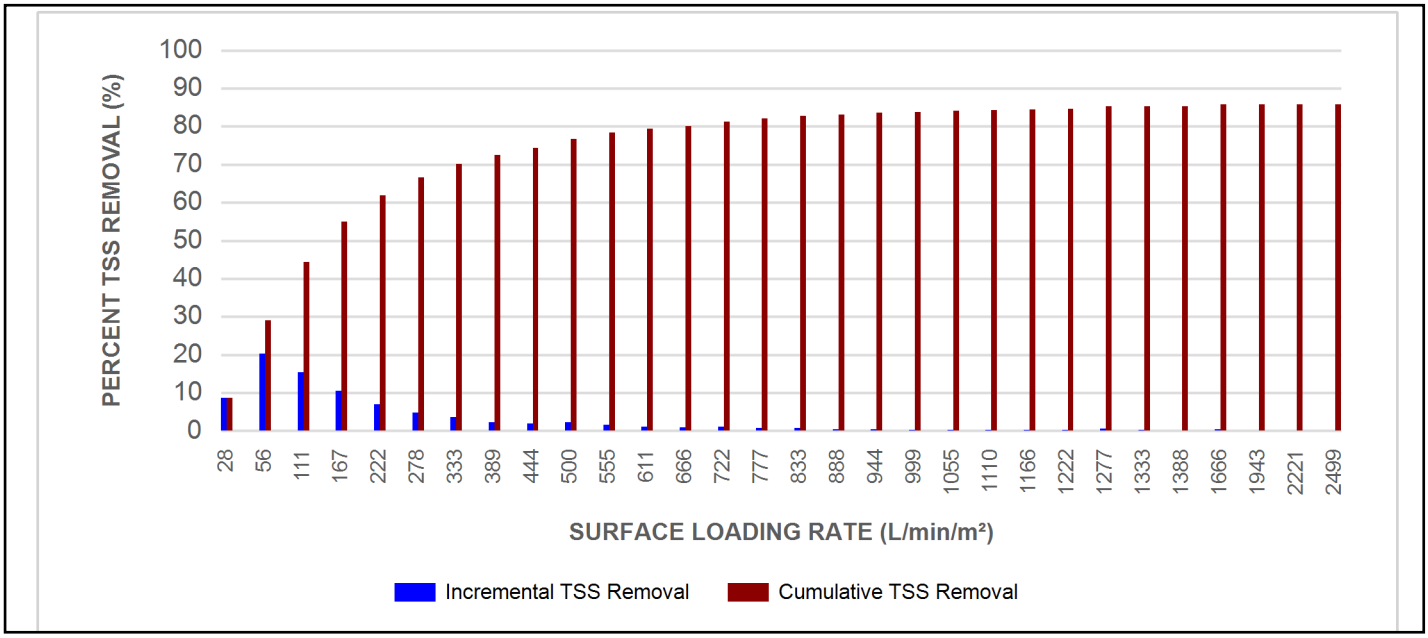

Maximum Pipe Diameter / Peak Conveyance

Stormceptor EF / EFO	Model Diameter		Min Angle Inlet / Outlet Pipes	Max Inlet Pipe Diameter		Max Outlet Pipe Diameter		Peak Conveyance Flow Rate	
	(m)	(ft)		(mm)	(in)	(mm)	(in)	(L/s)	(cfs)
EF4 / EFO4	1.2	4	90	609	24	609	24	425	15
EF6 / EFO6	1.8	6	90	914	36	914	36	990	35
EF8 / EFO8	2.4	8	90	1219	48	1219	48	1700	60
EF10 / EFO10	3.0	10	90	1828	72	1828	72	2830	100
EF12 / EFO12	3.6	12	90	1828	72	1828	72	2830	100

SCOUR PREVENTION AND ONLINE CONFIGURATION

►**Stormceptor® EF and EFO** feature an internal bypass and superior scour prevention technology that have been demonstrated in third-party testing according to the scour testing provisions of the Canadian ETV **Procedure for Laboratory Testing of Oil-Grit Separators**, and the exceptional scour test performance has been third-party verified in accordance with the ISO 14034 ETV protocol. As a result, Stormceptor EF and EFO are approved for online installation, eliminating the need for costly additional bypass structures, piping, and installation expense.

DESIGN FLEXIBILITY

►**Stormceptor® EF** and **EFO** offers design flexibility in one simplified platform, accepting stormwater flow from a single inlet pipe or multiple inlet pipes, and/or surface runoff through an inlet grate. The device can also serve as a junction structure, accommodate a 90-degree inlet-to-outlet bend angle, and can be modified to ensure performance in submerged conditions.

OIL CAPTURE AND RETENTION

►While Stormceptor® EF will capture and retain oil from dry weather spills and low intensity runoff, **Stormceptor® EFO** has demonstrated superior oil capture and greater than 99% oil retention in third-party testing according to the light liquid re-entrainment testing provisions of the Canadian ETV **Procedure for Laboratory Testing of Oil-Grit Separators**. Stormceptor EFO is recommended for sites where oil capture and retention is a requirement.

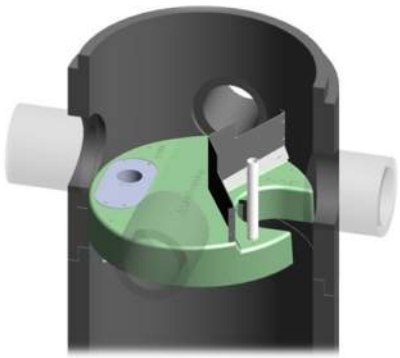

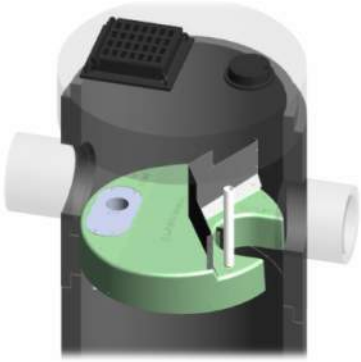

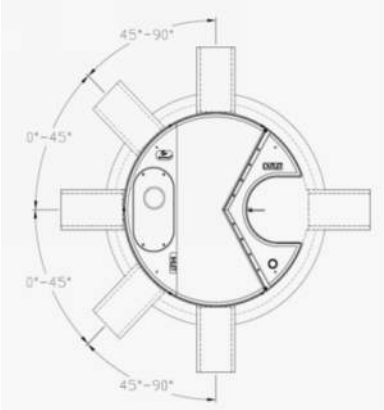

INLET-TO-OUTLET DROP

Elevation differential between inlet and outlet pipe inverts is dictated by the angle at which the inlet pipe(s) enters the unit.

0° - 45° : The inlet pipe is 1-inch (25mm) higher than the outlet pipe.

45° - 90° : The inlet pipe is 2-inches (50mm) higher than the outlet pipe.

HEAD LOSS

The head loss through Stormceptor EF is similar to that of a 60-degree bend structure. The applicable K value for calculating minor losses through the unit is 1.1. For submerged conditions the applicable K value is 3.0.

Pollutant Capacity

Stormceptor EF / EFO	Model Diameter		Depth (Outlet Pipe Invert to Sump Floor)		Oil Volume		Recommended Sediment Maintenance Depth *		Maximum Sediment Volume *		Maximum Sediment Mass **	
	(m)	(ft)	(m)	(ft)	(L)	(Gal)	(mm)	(in)	(L)	(ft^3)	(kg)	(lb)
EF4 / EFO4	1.2	4	1.52	5.0	265	70	203	8	1190	42	1904	5250
EF6 / EFO6	1.8	6	1.93	6.3	610	160	305	12	3470	123	5552	15375
EF8 / EFO8	2.4	8	2.59	8.5	1070	280	610	24	8780	310	14048	38750
EF10 / EFO10	3.0	10	3.25	10.7	1670	440	610	24	17790	628	28464	78500
EF12 / EFO12	3.6	12	3.89	12.8	2475	655	610	24	31220	1103	49952	137875

*Increased sump depth may be added to increase sediment storage capacity

** Average density of wet packed sediment in sump = 1.6 kg/L (100 lb/ft^3)

Feature	Benefit	Feature Appeals To
Patent-pending enhanced flow treatment and scour prevention technology	Superior, verified third-party performance	Regulator, Specifying & Design Engineer
Third-party verified light liquid capture and retention for EFO version	Proven performance for fuel/oil hotspot locations	Regulator, Specifying & Design Engineer, Site Owner
Functions as bend, junction or inlet structure	Design flexibility	Specifying & Design Engineer
Minimal drop between inlet and outlet	Site installation ease	Contractor
Large diameter outlet riser for inspection and maintenance	Easy maintenance access from grade	Maintenance Contractor & Site Owner

STANDARD STORMCEPTOR EF/EFO DRAWINGS

For standard details, please visit http://www.imbriumsystems.com/stormwater-treatment-solutions/stormceptor-ef

STANDARD STORMCEPTOR EF/EFO SPECIFICATION

For specifications, please visit http://www.imbriumsystems.com/stormwater-treatment-solutions/stormceptor-ef

STANDARD PERFORMANCE SPECIFICATION FOR "OIL GRIT SEPARATOR" (OGS) STORMWATER QUALITY TREATMENT DEVICE

PART 1 – GENERAL

1.1 WORK INCLUDED

This section specifies requirements for selecting, sizing, and designing an underground Oil Grit Separator (OGS) device for stormwater quality treatment, with third-party testing results and a Statement of Verification in accordance with ISO 14034 Environmental Management – Environmental Technology Verification (ETV).

1.2 REFERENCE STANDARDS & PROCEDURES

ISO 14034:2016 Environmental management – Environmental technology verification (ETV)

Canadian Environmental Technology Verification (ETV) Program's **Procedure for Laboratory Testing of Oil-Grit Separators**

1.3 SUBMITTALS

1.3.1 All submittals, including sizing reports & shop drawings, shall be submitted upon request with each order to the contractor then forwarded to the Engineer of Record for review and acceptance. Shop drawings shall detail all OGS components, elevations, and sequence of construction.

1.3.2 Alternative devices shall have features identical to or greater than the specified device, including: treatment chamber diameter, treatment chamber wet volume, sediment storage volume, and oil storage volume.

1.3.3 Unless directed otherwise by the Engineer of Record, OGS stormwater quality treatment product substitutions or alternatives submitted within ten days prior to project bid shall not be accepted. All alternatives or substitutions submitted shall be signed and sealed by a local registered Professional Engineer, based on the exact same criteria detailed in Section 3, in entirety, subject to review and approval by the Engineer of Record.

PART 2 – PRODUCTS

2.1 OGS POLLUTANT STORAGE

The OGS device shall include a sump for sediment storage, and a protected volume for the capture and storage of petroleum hydrocarbons and buoyant gross pollutants. The minimum sediment & petroleum hydrocarbon storage capacity shall be as follows:

2.1.1	4 ft (1219 mm) Diameter OGS Units:	1.19 m^3 sediment / 265 L oil
	6 ft (1829 mm) Diameter OGS Units:	3.48 m^3 sediment / 609 L oil
	8 ft (2438 mm) Diameter OGS Units:	8.78 m^3 sediment / 1,071 L oil
	10 ft (3048 mm) Diameter OGS Units:	17.78 m^3 sediment / 1,673 L oil
	12 ft (3657 mm) Diameter OGS Units:	31.23 m^3 sediment / 2,476 L oil

PART 3 – PERFORMANCE & DESIGN

3.1 GENERAL

The OGS stormwater quality treatment device shall be verified in accordance with ISO 14034:2016 Environmental management – Environmental technology verification (ETV). The OGS stormwater quality treatment device shall

remove oil, sediment and gross pollutants from stormwater runoff during frequent wet weather events, and retain these pollutants during less frequent high flow wet weather events below the insert within the OGS for later removal during maintenance. The Manufacturer shall have at least ten (10) years of local experience, history and success in engineering design, manufacturing and production and supply of OGS stormwater quality treatment device systems, acceptable to the Engineer of Record.

3.2 SIZING METHODOLOGY

The OGS device shall be engineered, designed and sized to provide stormwater quality treatment based on treating a minimum of 90 percent of the average annual runoff volume and a minimum removal of an annual average 60% of the sediment (TSS) load based on the Particle Size Distribution (PSD) specified in the sizing report for the specified device. Sizing of the OGS shall be determined by use of a minimum ten (10) years of local historical rainfall data provided by Environment Canada. Sizing shall also be determined by use of the sediment removal performance data derived from the ISO 14034 ETV third-party verified laboratory testing data from testing conducted in accordance with the Canadian ETV protocol Procedure for Laboratory Testing of Oil-Grit Separators, as follows:

3.2.1 Sediment removal efficiency for a given surface loading rate and its associated flow rate shall be based on sediment removal efficiency demonstrated at the seven (7) tested surface loading rates specified in the protocol, ranging 40 L/min/m^2 to 1400 L/min/m^2, and as stated in the ISO 14034 ETV Verification Statement for the OGS device.

3.2.2 Sediment removal efficiency for surface loading rates between 40 L/min/m^2 and 1400 L/min/m^2 shall be based on linear interpolation of data between consecutive tested surface loading rates.

3.2.3 Sediment removal efficiency for surface loading rates less than the lowest tested surface loading rate of 40 L/min/m^2 shall be assumed to be identical to the sediment removal efficiency at 40 L/min/m^2. No extrapolation shall be allowed that results in a sediment removal efficiency that is greater than that demonstrated at 40 L/min/m^2.

3.2.4 Sediment removal efficiency for surface loading rates greater than the highest tested surface loading rate of 1400 L/min/m^2 shall assume zero sediment removal for the portion of flow that exceeds 1400 L/min/m^2, and shall be calculated using a simple proportioning formula, with 1400 L/min/m^2 in the numerator and the higher surface loading rate in the denominator, and multiplying the resulting fraction times the sediment removal efficiency at 1400 L/min/m^2.

The OGS device shall also have sufficient annual sediment storage capacity as specified and calculated in Section 2.1.

3.3 CANADIAN ETV or ISO 14034 ETV VERIFICATION OF SCOUR TESTING

The OGS device shall have Canadian ETV or ISO 14034 ETV Verification of third-party scour testing conducted in accordance with the Canadian ETV Program's **Procedure for Laboratory Testing of Oil-Grit Separators.**

3.3.1 To be acceptable for on-line installation, the OGS device must demonstrate an average scour test effluent concentration less than 10 mg/L at each surface loading rate tested, up to and including 2600 L/min/m^2.

3.4 LIGHT LIQUID RE-ENTRAINMENT SIMULATION TESTING

The OGS device shall have Canadian ETV or ISO 14034 ETV Verification of completed third-party Light Liquid Re-entrainment Simulation Testing in accordance with the Canadian ETV **Program's Procedure for Laboratory Testing of Oil-Grit Separators,** with results reported within the Canadian ETV or ISO 14034 ETV verification. This re-entrainment testing is conducted with the device pre-loaded with low density polyethylene (LDPE) plastic beads as a surrogate for light liquids such as oil and fuel. Testing is conducted on the same OGS unit tested for sediment removal to

assess whether light liquids captured after a spill are effectively retained at high flow rates.

3.4.1 For an OGS device to be an acceptable stormwater treatment device on a site where vehicular traffic occurs and the potential for an oil or fuel spill exists, the OGS device must have reported verified performance results of greater than 99% cumulative retention of LDPE plastic beads for the five specified surface loading rates (ranging 200 L/min/m^2 to 2600 L/min/m^2) in accordance with the Light Liquid Re-entrainment Simulation Testing within the Canadian ETV Program's **Procedure for Laboratory Testing of Oil-Grit Separators.** However, an OGS device shall not be allowed if the Light Liquid Re-entrainment Simulation Testing was performed with screening components within the OGS device that are effective at retaining the LDPE plastic beads, but would not be expected to retain light liquids such as oil and fuel.

Appendix F

City Correspondence

PARSONS

Charlebois, Patrick [NN-CA]

From: Dieme, Abi <Abibatou.Dieme@ottawa.ca>
Sent: August 15, 2023 8:42 AM
To: Charlebois, Patrick [NN-CA]
Cc: Theiner, Mathew [NN-CA]; Villeneuve, Benoit [NN-CA]
Subject: [EXTERNAL] RE: 1660 Merivale Rd. Nepean - Boundary Condition
Attachments: 1660 Merivale Road July 2023.pdf

Follow Up Flag: Follow up
Flag Status: Flagged

Hi Patrick,

The following are boundary conditions, HGL, for hydraulic analysis at 1660 Merivale Road (zone 2W2C) assumed to be a dual connection to the 203 mm on Viewmount Drive OR the 152 mm watermain on Glenmanor Drive OR the 152 mm watermain on Merivale Road (see attached PDF for location). I wasn't able to find records showing the location of the services so a locate company may be your next option.

	Unit	Viewmount Connection	Glenmanor Connection	Merivale Connection
Min HGL	m	125.0	125.0	125.0
Max HGL	m	133.0	133.0	132.9
Max Day + Fireflow (83 L/s)	m	127.3	122.3	124.1

These are for current conditions and are based on computer model simulation.

Disclaimer: The boundary condition information is based on current operation of the city water distribution system. The computer model simulation is based on the best information available at the time. The operation of the water distribution system can change on a regular basis, resulting in a variation in boundary conditions. The physical properties of watermains deteriorate over time, as such must be assumed in the absence of actual field test data. The variation in physical watermain properties can therefore alter the results of the computer model simulation.

Regards,
Abi

From: Patrick.Charlebois@parsons.com <Patrick.Charlebois@parsons.com>
Sent: July 17, 2023 3:30 PM
To: Dieme, Abi <Abibatou.Dieme@ottawa.ca>
Cc: Theiner, Mathew <mathew.theiner@parsons.com>; Benoit.Villeneuve@parsons.com
Subject: RE: 1660 Merivale Rd. Nepean - Boundary Condition

CAUTION: This email originated from an External Sender. Please do not click links or open attachments unless you recognize the source.

ATTENTION : Ce courriel provient d'un expéditeur externe. Ne cliquez sur aucun lien et n'ouvrez pas de pièce jointe, excepté si vous connaissez l'expéditeur.

Hi Abi,

No problem, see attached fire flow and water demand for 1660 Merivale Rd, calculated as per the FUS2020 methodology.

Thanks,

Patrick Charlebois, EIT
Junior Designer – Municipal Infrastructure
100-1223 Michael Street North, Ottawa, ON, K1J 7T2
patrick.charlebois@parsons.com
Mobile +1 647.207.8063
Parsons / LinkedIn [linkedin.com] / Twitter [twitter.com] / Facebook [facebook.com] / Instagram [instagram.com]

PARSONS

[parsonscsgpublic.s3.amazonaws.com]

From: Dieme, Abi <Abibatou.Dieme@ottawa.ca>
Sent: Monday, July 17, 2023 9:47 AM
To: Charlebois, Patrick [NN-CA] <Patrick.Charlebois@parsons.com>
Cc: Theiner, Mathew [NN-CA] <Mathew.Theiner@parsons.com>; Villeneuve, Benoit [NN-CA] <Benoit.Villeneuve@parsons.com>
Subject: [EXTERNAL] RE: 1660 Merivale Rd. Nepean - Boundary Condition

Hi Patrick,

Apologies for the late response. I've been looking in our records but couldn't find any existing plans to confirm the location of the water service. My last alternative is to request files from our archives. I should have them next week. In the meantime, boundary conditions have been requested for potential connection on Viewmount Drive, Merivale Road or Glenmanor Drive.
I'll let you know when I get further information.
Could you please share your water demand and fire flow calculations for our records? I am anticipating a request from our Water Resources Engineers. Thank you in advance.

Regards,
Abi

From: Patrick.Charlebois@parsons.com <Patrick.Charlebois@parsons.com>
Sent: July 05, 2023 8:53 AM
To: Dieme, Abi <Abibatou.Dieme@ottawa.ca>
Cc: Theiner, Mathew <mathew.theiner@parsons.com>; Benoit.Villeneuve@parsons.com
Subject: 1660 Merivale Rd. Nepean - Boundary Condition

CAUTION: This email originated from an External Sender. Please do not click links or open attachments unless you recognize the source.

ATTENTION : Ce courriel provient d'un expéditeur externe. Ne cliquez sur aucun lien et n'ouvrez pas de pièce jointe, excepté si vous connaissez l'expéditeur.

Hi Abi,

We are looking to obtain the boundary conditions for the proposed gas station renovation located at 1660 Merivale Rd. Nepean ON.

The client doesn't have any information on the existing condition and there is no information on GeoOttawa regarding the existing private water service which serves the convenience store and car wash.
Three water valves were identified on site and are shown in the sketch attached. Also, as per paint marks shown below, it looks like at least one of the current buildings would be connected on the 200mm WM on Viewmount Dr.
Would you be able to confirm the water service information with the City Water Card?

For the Boundary condition, the finished floor elevation of the Car Wash is 86.87 and future convenience store/restaurant is 86.97.

The table below summarizes the demands and fire flow for the building, calculated as per the FUS2020 methodology.

Average Day Demand (L/s)	Maximum Day Demand (L/s)	Maximum Hour Demand (L/s)	Fire Flow (L/s)
2.21	3.32	5.97	83

Please advise if additional information is required to provide the boundary conditions.

Regards,

Patrick Charlebois, EIT
Junior Designer – Municipal Infrastructure
100-1223 Michael Street North, Ottawa, ON, K1J 7T2
patrick.charlebois@parsons.com
Mobile +1 647.207.8063
Parsons / LinkedIn [linkedin.com] / Twitter [twitter.com] / Facebook [facebook.com] / Instagram [instagram.com]

[parsonscsgpublic.s3.amazonaws.com]

'NOTICE: This email message and all attachments transmitted with it may contain privileged and confidential information, and information that is protected by, and proprietary to, Parsons Corporation, and is intended solely for the use of the addressee for the specific purpose set forth in this communication. If the reader of this message is not the intended recipient, you are hereby notified that any reading, dissemination, distribution, copying, or other use of this message or its attachments is strictly prohibited, and you should delete this message and all copies and backups thereof. The recipient may not further distribute or use any of the information contained herein without the express written authorization of the sender. If you have received this message in error, or if you have any questions regarding the use of the proprietary information contained therein, please contact the sender of this message immediately, and the sender will provide you with further instructions.'
'

This e-mail originates from the City of Ottawa e-mail system. Any distribution, use or copying of this e-mail or the information it contains by other than the intended recipient(s) is unauthorized. Thank you.

Le présent courriel a été expédié par le système de courriels de la Ville d'Ottawa. Toute distribution, utilisation ou reproduction du courriel ou des renseignements qui s'y trouvent par une personne autre que son destinataire prévu est interdite. Je vous remercie de votre collaboration.

'
'

This e-mail originates from the City of Ottawa e-mail system. Any distribution, use or copying of this e-mail or the information it contains by other than the intended recipient(s) is unauthorized. Thank you.

Le présent courriel a été expédié par le système de courriels de la Ville d'Ottawa. Toute distribution, utilisation ou reproduction du courriel ou des renseignements qui s'y trouvent par une personne autre que son destinataire prévu est interdite. Je vous remercie de votre collaboration.

'

Boundary Conditions for 1660 Merivale Road

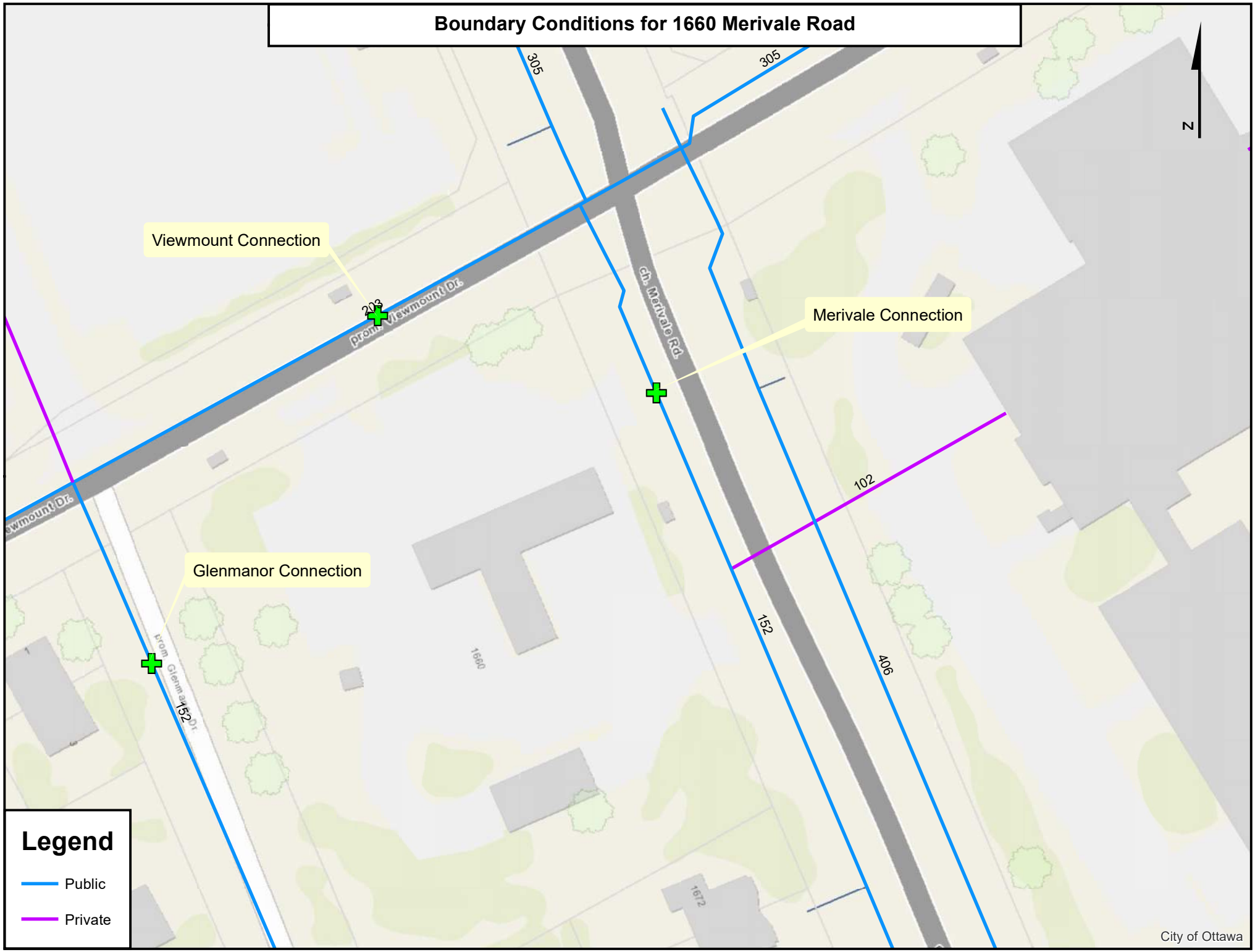

Appendix G

WaterCAD Analysis

PARSONS

WaterCad Results - Connection at Merivale

Average Day Demand TO Max HGL

Label	Length (Scaled) (m)	Start Node	Stop Node	Diameter (mm)	Material	Hazen-Williams C	Flow (L/s)	Velocity (m/s)	Headloss Gradient (m/m)	Has Check Valve?
P-1	7	J-1	J-2	152	Cast Iron	130	0	0	0	FALSE
P-2	78	J-2	J-3	152	Cast Iron	130	0	0	0	FALSE
P-3	42	J-3	J-4	203	Cast Iron	130	0	0	0	FALSE
P-4	50	J-4	J-5	203	Cast Iron	130	0	0	0	FALSE
P-5	82	J-5	J-6	152	Cast Iron	130	2	0.12	0	FALSE
P-6	34	J-6	J-7	152	Cast Iron	130	0	0	0	FALSE
P-7	18	J-5	J-8	152	Cast Iron	130	0	0	0	FALSE
P-8	41	J-8	Hydrant	406	Cast Iron	130	0	0	0	FALSE
P-9	79	Hydrant	J-9	406	Cast Iron	130	0	0	0	FALSE
P-12	46	J-6	Car Wash	50	PE	130	2	1.09	0.032	FALSE
P-20	47	Car Wash	New Building	50	PE	150	0	0.07	0	FALSE
RP-1	5	R-1	J-5	1000	Cast iron	130	2	0	0	TRUE

Label	Demand (L/s)	Elevation (m)	Pressure Head (m)	Hydraulic Grade (m)	Pressure (kPa)	Pressure (PSI)
Car Wash	2	86.87	44.53	131.4	436	63
Hydrant	0	87.15	45.75	132.9	448	65
J-1	0	85.5	47.4	132.9	464	67
J-2	0	85.5	47.4	132.9	464	67
J-3	0	86.14	46.76	132.9	458	66
J-4	0	86.63	46.27	132.9	453	66
J-5	0	88.08	44.82	132.9	439	64
J-6	0	86.19	46.7	132.89	457	66
J-7	0	86.5	46.39	132.89	454	66
J-8	0	88	44.9	132.9	439	64
J-9	0	86.5	46.4	132.9	454	66
New Building	0	87.15	44.24	131.39	433	63

Reservoir = 132.9

Max pressure = 80 PSI

Peak Demand TO Min HGL

Label	Length (Scaled) (m)	Start Node	Stop Node	Diameter (mm)	Material	Hazen-Williams C	Flow (L/s)	Velocity (m/s)	Headloss Gradient (m/m)	Has Check Valve?
P-1	7	J-1	J-2	152	Cast Iron	130	0	0	0	FALSE
P-2	78	J-2	J-3	152	Cast Iron	130	0	0	0	FALSE
P-3	42	J-3	J-4	203	Cast Iron	130	0	0	0	FALSE
P-4	50	J-4	J-5	203	Cast Iron	130	0	0	0	FALSE
P-5	82	J-5	J-6	152	Cast Iron	130	5	0.3	0.001	FALSE
P-6	34	J-6	J-7	152	Cast Iron	130	0	0	0	FALSE
P-7	18	J-5	J-8	152	Cast Iron	130	0	0	0	FALSE
P-8	41	J-8	Hydrant	406	Cast Iron	130	0	0	0	FALSE
P-9	79	Hydrant	J-9	406	Cast Iron	130	0	0	0	FALSE
P-12	46	J-6	Car Wash	50	PE	130	5	2.75	0.178	FALSE
P-20	47	Car Wash	New Building	50	PE	150	0	0	0	FALSE
RP-1	5	R-1	J-5	1000	Cast iron	130	5	0.01	0	TRUE

Label	Demand (L/s)	Elevation (m)	Pressure Head (m)	Hydraulic Grade (m)	Pressure (kPa)	Pressure (PSI)
Car Wash	5	86.87	29.8	116.67	292	42
Hydrant	0	87.15	37.85	125	370	54
J-1	0	85.5	39.5	125	387	56
J-2	0	85.5	39.5	125	387	56
J-3	0	86.14	38.86	125	380	55
J-4	0	86.63	38.37	125	376	55
J-5	0	88.08	36.92	125	361	52
J-6	0	86.19	38.75	124.94	379	55
J-7	0	86.5	38.44	124.94	376	55
J-8	0	88	37	125	362	53
J-9	0	86.5	38.5	125	377	55
New Building	0	87.15	29.52	116.67	289	42

Reservoir = 125.0

Min pressure = 40 PSI

Max Day + FF TO Max Day + FF

Label	Length (Scaled) (m)	Start Node	Stop Node	Diameter (mm)	Material	Hazen-Williams C	Flow (L/s)	Velocity (m/s)	Headloss Gradient (m/m)	Has Check Valve?
P-1	7	J-1	J-2	152	Cast Iron	130	0	0	0	FALSE
P-2	78	J-2	J-3	152	Cast Iron	130	0	0	0	FALSE
P-3	42	J-3	J-4	203	Cast Iron	130	0	0	0	FALSE
P-4	50	J-4	J-5	203	Cast Iron	130	0	0	0	FALSE
P-5	82	J-5	J-6	152	Cast Iron	130	3	0.18	0	FALSE
P-6	34	J-6	J-7	152	Cast Iron	130	0	0	0	FALSE
P-7	18	J-5	J-8	152	Cast Iron	130	83	4.55	0.123	FALSE
P-8	41	J-8	Hydrant	406	Cast Iron	130	83	0.64	0.001	FALSE
P-9	79	Hydrant	J-9	406	Cast Iron	130	0	0	0	FALSE
P-12	46	J-6	Car Wash	50	PE	130	3	1.64	0.068	FALSE
P-20	47	Car Wash	New Building	50	PE	150	0	0.11	0	FALSE
RP-1	5	R-1	J-5	1000	Cast iron	130	86	0.11	0	TRUE

Label	Demand (L/s)	Elevation (m)	Pressure Head (m)	Hydraulic Grade (m)	Pressure (kPa)	Pressure (PSI)
Car Wash	3	86.87	34.03	120.9	333	48
Hydrant	83	87.15	34.64	121.79	339	49
J-1	0	85.5	38.6	124.1	378	55
J-2	0	85.5	38.6	124.1	378	55
J-3	0	86.14	37.96	124.1	372	54
J-4	0	86.63	37.47	124.1	367	53
J-5	0	88.08	36.02	124.1	353	51
J-6	0	86.19	37.89	124.08	371	54
J-7	0	86.5	37.58	124.08	368	53
J-8	0	88	33.83	121.83	331	48
J-9	0	86.5	35.29	121.79	345	50
New Building	0	87.15	33.74	120.89	330	48

Reservoir = 124.1

Min pressure = 20 PSI

Scenario: Base

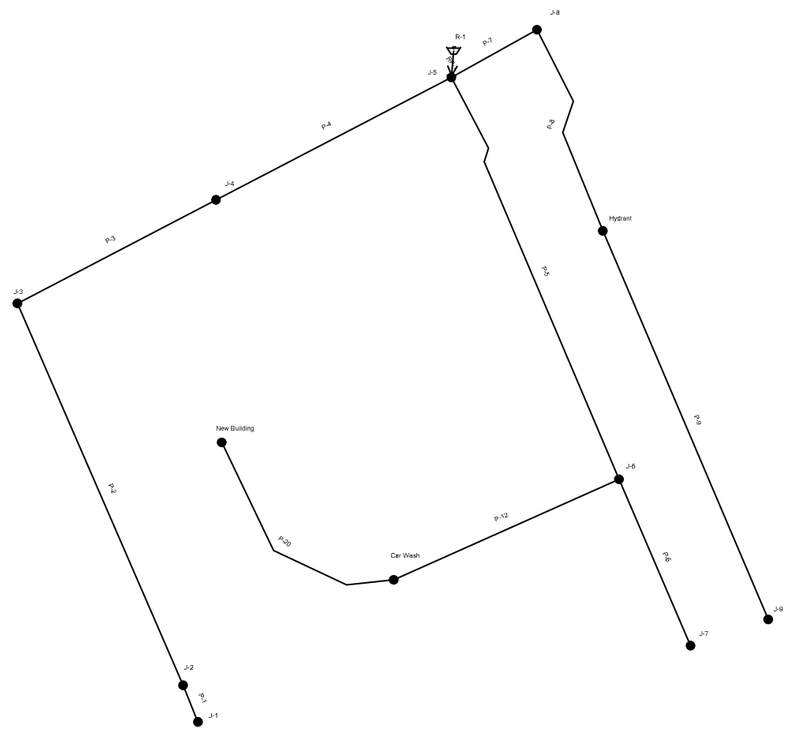

Appendix H

CCTV of Site Sanitary Sewer

PARSONS

Ottawa (Head Office)
1800 Bantree Street
Ottawa, Ontario K1B 5L6
☎ 613.745.2444
613.745.9994
www.cwwcanada.com
1.866.695.0155

Montreal
2700 Sabourin Street
St-Laurent, Quebec H4S 1M2
☎ 514.738.2666
514.738.9762

CLEAN WATER WORKS INC.
INTEGRATED SEWER SOLUTIONS

PARSONS

1660 MERIVALE ROAD
Ottawa, Ontario

SEWER CCTV INSPECTION REPORT

Report ID
139698SA1

Sewer Use
Sanitary

Completion Date
July 17, 2024

Inspected Length
30.20 meters

THE WAY IS CLEAR™

- Watermain Swabbing
- Hydro Vacuum Excavation
- CCTV Inspection of Sewers
- Plumbing & Drain Services
- Structural Rehabilitation of Manholes
- Cured-in-Place-Pipe Lining & Spot Repairs
- Grouting, Test & Seal Joints, Manholes & Services
- Lateral Sewer Inspection & Locates From Main
- Sewer Cleaning, Flushing & Pumping

Table of contents

Page

1. Index of pipes 2
2. Structural rating 3
3. O&M rating 4
4. Pipe summary and condition details 5
5. Vision Report© Legend 7

1. Index of pipes

1 item

Pipe	Start/End	Direction	Road	Date	Diameter	Inspected	Total	Page
BUILDING MHSA20010	MHSA20010 --> BUILDING	U - Upstream	1660 MERIVALE RD	17/07/2024 10:31 AM	225	30.2	30.2	5
						Total: 30.2		

2. Structural rating

1 item

0 - No Defects (1 of 1 items)

Score	Quick	Index	Pipe	Start/End	Direction	Street	Page
0	0000	0	BUILDING MHSA20010	MHSA20010 --> BUILDING	Against flow	1660 MERIVALE RD	5

3. O&M rating

1 item

0 - No Defects (1 of 1 items)

Score	Quick	Index	Structural	Pipe	Start/End	Direction	Street	Page
0	0000	0	0	BUILDING MHSA20010	MHSA20010 --> BUILDING	Against flow	1660 MERIVALE RD	5

4. Pipe summary and condition details

Pipe identification

Pipe:	BUILDING MHSA20010	**Direction of inspection:**	MHSA20010 --> BUILDING
Direction of flow:	BUILDING --> MHSA20010	**Direction:**	Against flow

Pipe location

		UPSTREAM	DOWNSTREAM
Road:	1660 MERIVALE RD	**Easting (X):**	**Easting (X):**
Crossroad:		**Northing (Y):**	**Northing (Y):**
Drainage Area:		**Elevation (Z):**	**Elevation (Z):**
City:	OTTAWA ON		
Location:	Parking Lot		
Owner:	PARSONS INC	**GPS Accuracy:**	
Road segment:		**Corrdinate System:**	
		Vertical Datum:	

Pipe characteristics

Sewer Use:	Sanitary	**Inspected length:**	30.2
Height:	225	**Total length:**	30.2
Width:		**Rim/Inv.:**	
Shape:	Circular	**Grade/Inv.:**	
Material:	Polyvinyl Chloride	**Rim/Grade:**	
Lining:		**Rim/Inv.:**	
Joint length:	4	**Grade/Inv.:**	
Year laid:		**Rim/Grade:**	
Year renewed:		**Sewer category:**	

Additional details

Inspection standard:	PACP 6.0	**Location details:**	
Date:	17/07/2024 10:31 AM	**Surveyed by:**	DEREK B
Project Number:		**Certificate #:**	U-815-07000446
Customer:	PARSONS INC	**Pre-Cleaning:**	Jetting
PO number:		**Date cleaned:**	
Work order:	139698	**Unit of measurement:**	Metric
Purpose:	Not Known	**Media label:**	
Weather:	Dry	**Sheet #:**	
Flow control:	Not Controlled		

Structural rating		O&M rating		Overall rating	
Peak:	0	**Peak:**	0	**Peak:**	0
Quick rating:	0000	**Quick rating:**	0000	**Quick rating:**	0000
Score:	0	**Score:**	0	**Score:**	0
Index:	0	**Index:**	0	**Index:**	0

Additional information

Other information

Report ID:	139698SA1	**Information 6:**	
Information 2:		**Information 7:**	
Information 3:		**Information 8:**	
Information 4:		**Information 9:**	
Information 5:		**Information 10:**	

4. Pipe summary and condition details

1 / 1

Downstream
MHSA20010

Invert
NA

1 **0.00 m**
AMH - Manhole, MHSA20010

2 **0.00 m**
MWL - Water Level, 5%

3 **13.50 m**
TF - Tap Factory, at 12 o'clock, Dim.1=200

4 **29.60 m**
MSC - Shape or Size Change, Dim.1=200

5 **30.20 m**
MSC - Shape or Size Change, Dim.1=150

6 **30.20 m**
AMH - Manhole, BUILDING

Invert
NA

Upstream
BUILDING

Vision Report© Legend

44 46 49 54 60	The numbers sequentially identify each observation. They allow you to find complete descriptions and related photos throughout the pages. Note that when the pipe contains too many observations, the Vision© report hides the least important observations to optimize the display*.
60	A number with neither a square nor circle indicates a general observation.
46 38 46 11 25	A circled number indicates a structural anomaly. The color of the circle indicates the severity of the anomaly on a scale of 1 to 5, 5 being the most severe: green=1, blue=2, magenta=3, orange=4 and red=5.
44 44 44 44 44	A number in a square indicates an operation and maintenance anomaly. The color of the square indicates the severity of the anomaly on a scale of 1 to 5, 5 being the most severe: green=1, blue=2, magenta=3, orange=4 and red=5.
◀ 3 / 31 ▶	Indicates the current page number of the inspection report.
	The blue square indicates a section of the pipe; this section is covered in detail on the current page of the report.
	The green line indicates the inspected part of the pipe. The remaining white line indicates the uninspected part of the pipe.
▶|	Indicates the hold points on the camera during an inspection.
|◀	Indicates the hold points on the camera during the reverse inspection.
	Indicates that a reverse inspection was carried out, however the camera did not reach the initial inspection hold point. (the hold point of the initial inspection)
	Indicates that a reverse inspection was carried out and that it has joined (has arrived at) the initial inspection hold point.
401-059B	Identifies the start manhole number. Note that this manhole is not necessarily the upstream manhole of the pipe.
401-631	Identifies the end manhole number. Note that this manhole is not necessarily the downstream manhole of the pipe.
▼ ou ▲	A downward arrow indicates that the inspection was carried out in the direction of the current, whereas an upward arrow indicates an inspection against the current. Note that the manhole located on the upper left of the page is always the start manhole, but not necessarily the upstream manhole of the pipe.
	This camera followed by a downward arrow is located on the upper left of the vertical pipe; it indicates that an inspection was done from this manhole.
	When the second camera appears on the bottom left page it means that a reverse inspection was carried out. Information about the reverse inspection is included in the report, thereby combining both inspections.
Invert 3.40	The measurement shown under the word <Invert> indicates the measurements between the frame and the pipe captured during the inspection. This measurement is available at the top left for the start manhole and the bottom left for the end manhole. If the invert was not measured during the inspection, an <NA> mark will be displayed.
1 ↓ AMH - R	The downward bold arrow to the right of the observation number indicates that this observation was captured during the initial inspection.
14 ⇧ MSA - I	The blank arrow pointing upwards and located to the right of the observation number indicates that this observation was taken during the reverse inspection period, thereby confirming that this report combined both inspections.
18.40 m	Located to the right of the observation number is a number identifying the observation distance in relation to the start of the pipe.
SRV - Armature visible	A full description of the observation code according to the protocol used.

*Any hidden observations are readily accessible from the database as well as in other CTSpec report templates.

** CTSpec inc. reserves the right to modify, eliminate or add to the product features described in this pamphlet without notice.

© 2012 CTSpec inc. All rights reserved.

Appendix I

Flow Control Roof Drainage Declaration

PARSONS

FLOW CONTROL ROOF DRAINAGE DECLARATION

THIS FORM TO BE COMPLETED BY THE MECHANICAL AND STRUCTURAL ENGINEERS RESPONSIBLE FOR DESIGN

Permit Application No.

Project Name: Gas Station and Convenience Store

Building Location: 1660 Merival Road,

Municipality: Ottawa, Ontario

The roof drainage system has been designed in accordance with the following criteria: (please check one of the following).

M1. ☐ Conventionally drained roof (no flow control roof drains used).

M2. ☑ Flow control roof drains meeting the following conditions have been incorporated in this design:

(a) the maximum drain down time does not exceed 24h,
(b) one or more scuppers are installed so that the maximum depth of water on the roof cannot exceed 150mm,
(c) drains are located not more than 15m from the edge of roof and not more than 30m from adjacent drains, and
(d) there is at least one drain for each 900 sq.m.

M3. ☐ A flow control drainage system that does not meet the minimum drainage criteria described in M2 has been incorporated in this design.

PROFESSIONAL SEAL APPLIED BY:

Practitioner's Name: Marc Desbiens

Firm: Équation groupe conseil inc.

Phone#: 450-661-5022

City: Laval Province: Québec

LICENSED PROFESSIONAL ENGINEER
M. DESBIENS
100061458
PROVINCE OF ONTARIO
2024-05-13

Mechanical Engineer's Seal

S1. ☑ The design parameters incorporated into the overall structural design are consistent with the information provided by the Mechanical Engineer in M2. Loads due to rain are not considered to act simultaneously with loads due to snow as per Sentence 4.1.7.3 (3) OBC.

S2. ☐ The structure has been designed incorporating the additional structural loading due to rain acting simultaneously with the snow load. The design parameters are consistent with the control flow drainage system designed by the mechanical engineer.

PROFESSIONAL SEAL APPLIED BY:

Practitioner's Name: Marco Dumas

Firm: Équation groupe conseil inc.

Phone#: 450-661-5022

City: Laval Province: Québec

LICENSED PROFESSIONAL ENGINEER
M. J. T. DUMAS
100515102
PROVINCE OF ONTARIO
2024-05-10

Structural Engineer's Seal

Drawings

PARSONS

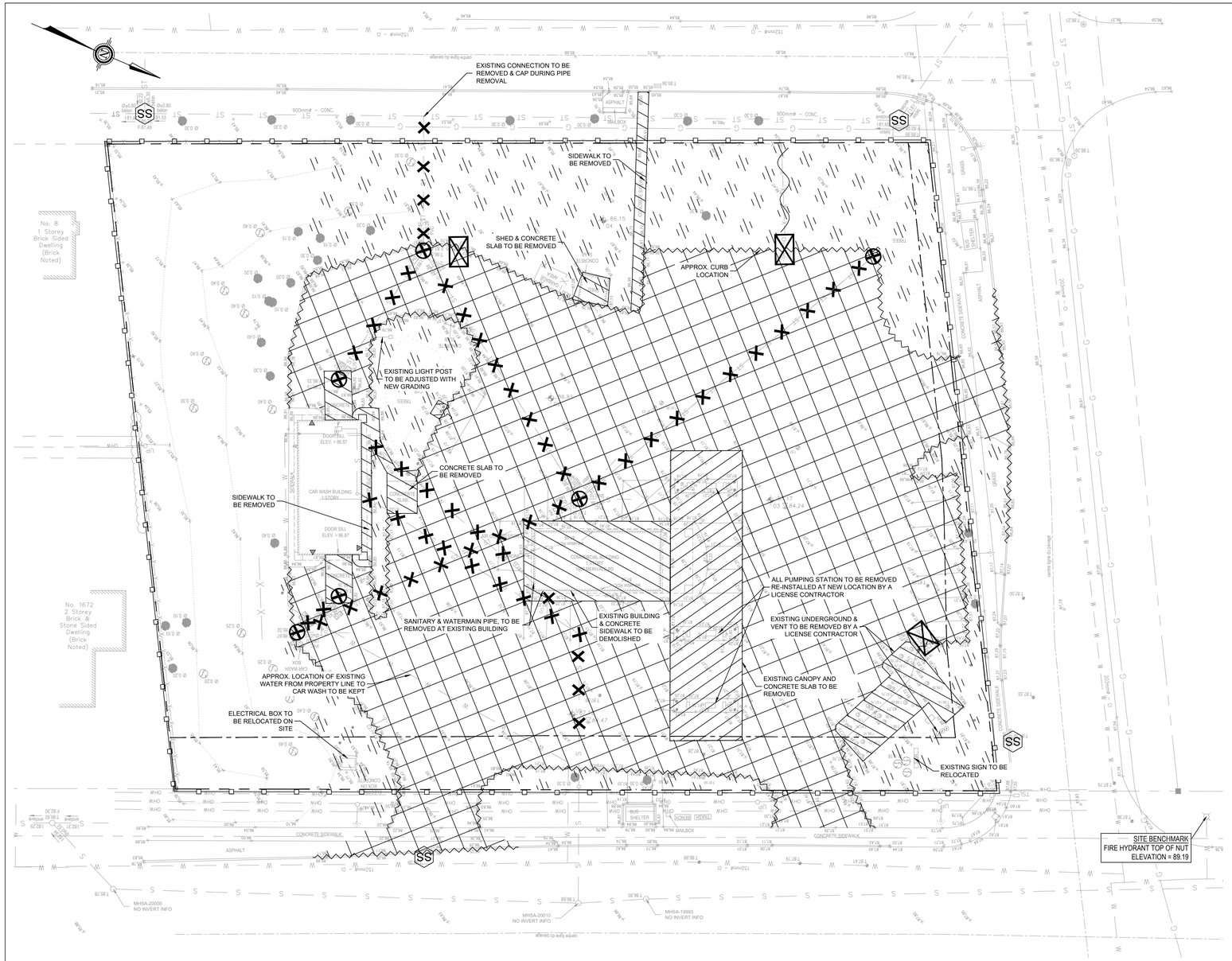

LEGEND:

- SITE PROPERTY LINE
- PROPOSED NEW PROPERTY LINE DUE TO RIGHT-OF-WAY WIDENING
- STRUCTURE TO BE REMOVED
- SEWER TO BE REMOVED
- LIGHT POST TO BE REMOVED
- SILT SACK PER DETAIL D1
- PROPOSED SILT FENCE AS PER OPSD 219.110
- EXISTING CURB REMOVAL
- EXISTING FENCE TO BE REMOVED
- ASPHALT REMOVAL
- LANDSCAPE REMOVAL
- CONCRETE REMOVAL
- BOREHOLE LOCATION & ELEVATION ID# & WATER LEVEL ELEVATION

KEY PLAN

TOPOGRAPHIC INFORMATION & BENCHMARK

TOPOGRAPHIC SURVEY COMPLETED BY VRSB ON MARCH 20th TO 22nd, 2023. ELEVATIONS SHOWN ARE GEODETIC AND ARE REFERRED TO THE CGVD-28 GEODETIC DATUM.

SITE BENCHMARK No.1 LOCATED ON NORTH WEST INTERSECTION OF MERIVALE ROAD. AND VIEWMOUNT DRIVE. FIRE HYDRANT TOP OF NUT ELEVATION = 89.19

LEGAL PLAN

LEGAL SURVEY COMPLETED BY FARLEY, SMITH & DENIS SURVEYING LTD. ON APRIL 21st, 2023. BEARINGS ARE ASTRONOMIC AND ARE REFERRED TO THE WESTERLY LIMIT OF MERIVALE ROAD HAVING A BEARING OF N 22° 18' 30" W AS SHOWN ON REGISTERED PLAN 401392.

EROSION AND SEDIMENT CONTROL MEASURES:

- CONTRACTOR IS RESPONSIBLE FOR ALL INSTALLATION, MONITORING, REPAIR AND REMOVAL OF ALL EROSION AND SEDIMENT CONTROL FEATURES. THE CONTRACTOR SHALL IMPLEMENT BEST MANAGEMENT PRACTICES, TO PROVIDE FOR PROTECTION OF THE AREA DRAINAGE SYSTEM AND THE RECEIVING WATERCOURSE, DURING CONSTRUCTION ACTIVITIES. THE CONTRACTOR ACKNOWLEDGES THAT FAILURE TO IMPLEMENT APPROPRIATE EROSION AND SEDIMENT CONTROL MEASURE MAY BE SUBJECT TO PENALTIES IMPOSED BY ANY APPLICABLE REGULATORY AGENCY.
- SEDIMENT AND EROSION CONTROL PLAN OBJECTIVES:
- PREVENT SOIL EROSION. THIS CAN RESULT FROM STREAMING RAIN WATER OR WIND EROSION DURING CONSTRUCTION,
- PREVENT SEDIMENT DEPOSITS IN THE SEWER PIPES AND NEARBY COLLECTING STREAMS (AS APPLICABLE),
- PREVENT AIR POLLUTION FROM PARTICULATE MATTER AND DUST.

1. PRIOR TO START OF CONSTRUCTION:

PRIOR TO THE REMOVAL OF ANY VEGETATIVE COVER, MOVING OF SOIL AND CONSTRUCTION:

- INSTALL SILT FENCE (AS PER OPSD 219.110) ALONG DITCHES IMMEDIATELY DOWNSTREAM FROM AREAS TO BE DISTURBED (SEE PLAN FOR LOCATION).
- INSTALL FILTER CLOTH ON DOWNSTREAM MANHOLE COVERS.
- INSTALL SILTSACK FILTERS IN ALL CONCRETE CATCH BASINS STRUCTURES.
- INSPECT MEASURES IMMEDIATELY AFTER INSTALLATION.
- THE CONTRACTOR MUST SET UP THE MEASURES INDICATED ON THE PLAN, INSPECT THEM FREQUENTLY AND CLEAN AND REPAIR OR REPLACE THE DETERIORATED STRUCTURES. AT THE END OF THE CONSTRUCTION PERIOD, THE CONTRACTOR IS RESPONSIBLE FOR REMOVAL OF THE TEMPORARY STRUCTURES AND RECONDITIONING THE AFFECTED AREAS

2. DURING CONSTRUCTION:

- SEDIMENT AND EROSION CONTROL MEASURES TO BE CONSTRUCTED AS PER OPSS 805.
- WHEN SEDIMENT AND EROSION CONTROL MEASURES MUST BE REMOVED TO COMPLETE A PORTION OF THE WORK, THE SAME MEASURES MUST BE REINSTATED UPON THE WORK'S COMPLETION.
- WORK TO BE DONE IN THE VICINITY OF MAJOR WATERWAYS TO BE CARRIED OUT FROM JULY AND SEPTEMBER ONLY.
- MINIMIZE THE EXTENT OF DISTURBED AREAS AND THE DURATION OF EXPOSURE.
- PROTECT DISTURBED AREAS FROM RUNOFF
- PROVIDE TEMPORARY COVER SUCH AS SEEDING OR MULCHING IF DISTURBED AREA WILL NOT BE REHABILITATED SHORTLY.
- INSPECT STRAW BALE FLOW CHECK DAMS, SILT FENCES, SILT SACKS, AND CATCH BASIN SUMPS REGULARLY AND AFTER EVERY MAJOR STORM EVENT. CLEAN AND REPAIR WHEN NECESSARY.
- PLAN TO BE REVIEWED AND REVISED AS REQUIRED DURING CONSTRUCTION.
- EROSION CONTROL FENCING TO BE ALSO INSTALLED AROUND THE BASE OF ALL STOCKPILES.
- DO NOT LOCATE TOPSOIL PILES AND EXCAVATION MATERIAL CLOSER THAN 2.5m FROM ANY PAVED SURFACE, OR ONE WHICH IS TO BE PAVED BEFORE THE PILE IS REMOVED. ALL TOPSOIL PILES ARE TO BE SEEDED IF THEY ARE TO REMAIN ON SITE LONG ENOUGH FOR SEEDS TO GROW (LONGER THAN 30 DAYS). WHEN STORING SOIL ON SITE IN PILES THE CONTRACTOR MUST COVER EACH PILE WITH TARPS, STRAW OR A GEOTEXTILE FABRIC TO AVOID FINE PARTICLE TRANSPORT BY WIND AND/OR STREAMING RAIN WATER
- CONTROL WIND-BLOWN DUST OFF SITE TO ACCEPTABLE LEVELS BY SEEDING TOPSOIL PILES AND OTHER AREAS TEMPORARILY (PROVIDE WATERING AS REQUIRED). FOR DUST CONTROL, CONTRACTOR TO APPLY CALCIUM CHLORIDE (TYPE I – OPSS 2501 AND CAN/CGSB-15-1) AND WATER WITH EQUIPMENT APPROVED BY THE OWNER'S REPRESENTATIVE AT RATE IN ACCORDANCE TO OPSS 506 WHEN DIRECTED BY OWNER'S REPRESENTATIVE.
- ALL EROSION CONTROL STRUCTURE TO REMAIN IN PLACE UNTIL ALL DISTURBED GROUND SURFACES HAVE BEEN STABILIZED EITHER BY PAVING OR RESTORATION OF VEGETATIVE GROUND COVER. SEDIMENT CAPTURE SILT SACKS MUST BE MAINTAINED AND CANNOT BE REMOVED UNTIL ALL LANDSCAPING AREAS ARE COMPLETED.
- NO ALTERNATE METHODS OF EROSION PROTECTION SHALL BE PERMITTED UNLESS APPROVES BY THIS CONSULTING ENGINEER AND THE CITY OF OTTAWA DEPARTMENT OF PUBLIC WORKS.
- CONTRACTOR RESPONSIBLE FOR MUNICIPAL ROADWAY AND SIDEWALK TO BE CLEANED OF ALL SEDIMENT FROM VEHICULAR TRACKING ETC. AT THE END OF EACH WORK DAY.
- DURING WET CONDITIONS, TIRES OF ALL VEHICLES/EQUIPMENT LEAVING THE SITE ARE TO BE SCRAPED.
- ANY MUD/MATERIAL TRACKED ONTO THE ROAD SHALL BE REMOVED IMMEDIATELY BY HAND OR RUBBER TIRE LOADER.
- TAKE ALL NECESSARY STEPS TO PREVENT BUILDING MATERIAL, CONSTRUCTION DEBRIS OR WASTE BEING SPILLED OR TRACKED ONTO ABUTTING PROPERTIES OR PUBLIC STREETS DURING CONSTRUCTION AND PROCEED IMMEDIATELY TO CLEAN UP ANY AREAS SO AFFECTED.
- PROVIDE GRAVEL ENTRANCE WHEREVER EQUIPMENT LEAVES THE SITE TO PROVIDE MUD TRACKING ONTO PAVED SURFACES. GRAVEL BED SHALL BE A MINIMUM OF 10m LONG, 4m WIDE, AND 0.15m DEEP AND SHALL CONSIST OF COARSE MATERIAL. MAINTAIN GRAVEL ENTRANCE IN CLEAN CONDITION.

3. AFTER CONSTRUCTION:

- PROVIDE PERMANENT COVER CONSISTING OF TOPSOIL AND SEED TO DISTURBED AREAS.
- ALL SEDIMENT AND EROSION CONTROL MEASURES TO BE REMOVED BY THE CONTRACTOR FOLLOWING THE COMPLETION OF WORK AND AFTER DISTURBED AREAS HAVE BEEN REHABILITATED AND STABILIZED, THIS INCLUDES REMOVE STRAW BALE FLOW CHECK DAMS, SILT FENCES AND FILTER CLOTHS ON CATCH BASINS AND MANHOLE COVERS.
- INSPECT AND CLEAN CATCH BASIN SUMPS AND STORM SEWERS.

NOTES: REMOVALS AND DEMOLITION

1. PRE-REMOVAL, THE CONTRACTOR MUST VISIT THE PREMISES IN ORDER TO BE FULLY AWARE OF EXISTING CONDITIONS ON SITE, INCLUDING ALL ELEMENTS TO BE REMOVED AND DEMOLISHED. NO CLAIM WILL BE ACCEPTED DUE TO A POOR EVALUATION OF THE WORK TO BE COMPLETED.
2. THE CONTRACTOR IS RESPONSIBLE FOR LOCATING AND THE REQUEST FOR INTERRUPTION OF PUBLIC UTILITY SERVICES, SUCH AS GAS, TELEPHONE, POWER, CABLE, SEWERS, WATERMAIN, ETC. BEFORE PROCEEDING WITH WORK, COORDINATE WITH ALL APPLICABLE UTILITY COMPANIES.
3. FIRE HYDRANTS TO BE TAGGED AND BAGGED AND/OR PROTECTED AS INDICATED ON DRAWING.
4. CURB, ASPHALT, SIDEWALK, AND GRANULAR BASE TO BE EXCAVATED WITHIN LIMITS OF DEMOLITION REMOVAL. THE CONTRACTOR MUST CARRY OUT NECESSARY SAW CUTS.
5. SEWER / WATERMAIN PIPES TO BE ABANDONED MUST BE CUT, FILL WITH UNSHRINKABLE CONCRETE CONFORMING TO OPSS 1359, AND CAPPED.
6. REMOVE AND DISPOSE SEWERS AS INDICATED. PLUG ANY SERVICE LATERALS TO BE ABANDONED.
7. THE CONTRACTOR MUST ENTIRELY REMOVE THE DEMOLITION WRECKAGE FROM THE CONSTRUCTION SITE OFFSITE IN ACCORDANCE WITH THE REQUIREMENTS OF THE MINISTRY OF ENVIRONMENT CONSERVATION AND PARKS (MECP).
   a. THE CONTRACTOR MUST DISCARD RECYCLABLE DEMOLITION MATERIALS IN COLLABORATION WITH A REGIONAL RECYCLING COMPANY.
   b. ALL OTHER DEMOLITION MATERIALS MUST BE DISPOSED OFF-SITE AT AUTHORIZED LICENSED LANDFILLS AND IN CONFORMITY WITH THE APPLICABLE LAWS AND REGULATIONS. THE CONTRACTOR MUST BE ABLE TO PROVIDE, UPON REQUEST, COPIES OF THE DISPOSAL TICKETS TO THE OWNER'S REPRESENTATIVE.
8. SURFACES AND WORKS LOCATED OUTSIDE OF THE CONSTRUCTION WORK LIMIT MUST BE REINSTATED AS THEY WERE BEFORE BEGINNING OF WORK. CONTRACTOR IS RESPONSIBLE TO MAKE GOOD ON ANY DAMAGES TO EXISTING CURB AND ASPHALT NOT SCHEDULED FOR REMOVAL.
9. ALL MATERIALS, PRODUCTS AND OTHERS COMING FROM THE DEMOLITION BELONG TO THE CONTRACTOR, UNLESS SPECIFIED OTHERWISE.
10. THE CONTRACTOR MUST COMPLETE ALL REMOVALS AS SHOWN ON THE DRAWINGS AND AS REQUIRED TO MAKE THE WORK COMPLETE.
11. THE CONTRACTOR MUST PROTECT AND MAINTAIN IN SERVICE THE EXISTING WORKS WHICH MUST REMAIN IN PLACE. IF THEY ARE DAMAGED, THE CONTRACTOR MUST IMMEDIATELY MAKE THE REPLACEMENTS AND NECESSARY REPAIRS TO THE SATISFACTION OF THE OWNER'S REPRESENTATIVE AND WITHOUT ADDITIONAL EXPENSE TO THE OWNER.
12. THE CONTRACTOR MUST NOT PERFORM ANY TREE CUTTING DURING THE CORE MIGRATORY BIRDS NESTING PERIOD, WHICH IS APRIL 15 TO AUGUST 15.

No.	DATE	DESCRIPTION	BY
05	2025-12-18	ISSUED FOR SPA - REV04	M.T.
04	2025-09-05	ISSUED FOR SPA - REV03	M.T.
03	2025-04-01	ISSUED FOR SPA - REV02	M.T.
02	2025-02-19	ISSUED FOR SPA - REV01	M.T.
01	2024-03-21	ISSUED FOR SPA	M.T.

REVISIONS

LICENSED PROFESSIONAL ENGINEER
P. CHARLEBOIS
100564967
12/18/2025
PROVINCE OF ONTARIO

5m 0 5 10m
SCALE: 1:250

PARSONS
1223 Michael Street, Suite 100, Ottawa, Ontario, Canada K1J 7T2
Tel: (613) 738-4160 Fax: (613) 739-7105

CLIENT
HARNOIS ÉNERGIES

PROJECT
CONVENIENCE STORE/RESTO
1660 MERIVALE
NEPEAN, ONTARIO

TITLE
EROSION/ SEDIMENT CONTROL & REMOVALS PLAN

DESIGNED BY P.C.		PROJECT NO. 478684	
DRAWN BY P.C.		C-101	REM
CHECKED BY M.T.			
DATE MAY 2025			
SCALE 1:250		DRAWING NO.	DRAWING

File #: D07-12-25-0019
Plan #: 1927D

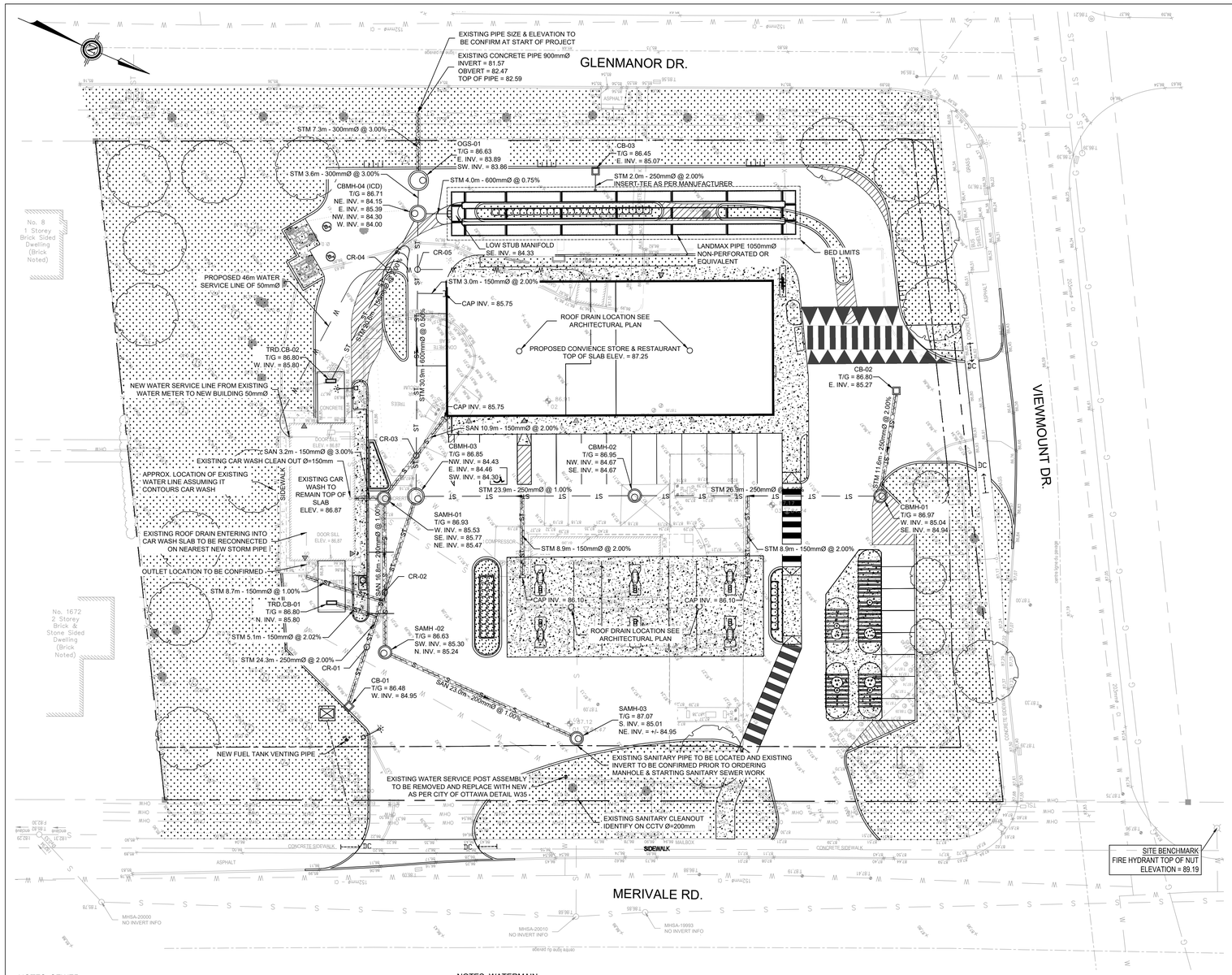

LEGEND:

- SITE PROPERTY LINE
- PROPOSED NEW PROPERTY LINE DUE TO RIGHT-OF-WAY WIDENING
- EXISTING OVER HEAD HYDRO LINE
- EXISTING GAS LINE
- EXISTING WATERMAIN
- EXISTING FIRE HYDRANT
- EXISTING VALVE COVER
- PROPOSED WATERMAIN
- EXISTING SANITARY SEWER AND MAINTENANCE HOLE
- PROPOSED SANITARY SEWER AND MAINTENANCE HOLE
- EXISTING STORM SEWER AND MAINTENANCE HOLE
- EXISTING STORM CATCH BASIN
- PROPOSED STORM SEWER AND MAINTENANCE HOLE
- PROPOSED CATCH BASIN
- PROPOSED TRENCH DRAIN
- PIPE INSULATION REQUIRED AS PER CITY OF OTTAWA DETAIL S35

CROSSING TABLE

CROSING NO.	TOP OF PIPE ELEV. AT CROSSING	PIPE INV. ELEV. AT CROSSING	CLEARANCE (m)
CR-01	WM. TOP 84.35	STM. INV 84.82	0.47
CR-02	STM. TOP 84.95	SAN. INV 85.37	0.41
CR-03	STM. TOP 84.88	SAN. INV 85.65	0.77
CR-04	WM. TOP 84.66	STM. INV 86.10	1.44
CR-05*	WM. TOP 83.88	STM. INV 84.18	0.30

*50mmø WATER SERVICE LINE TO BE DIVERTED AS PER CITY OF OTTAWA DETAIL W38

ICD SCHEDULE (ORIFICE)

ICD ID	LOCATION	ORIFICE INVERT (m)	FLOW 5y/100y (L/s)	HEAD 5y/100y (m)	EQUIVALENT DIAMETER (mm)	MODEL
01	CBMH-04	84.00	32.5/44.3	0.68/1.31	135	FRAME & PLATE CONTROL

*ICD SHOP DRAWING SHALL BE SUBMITTED TO PARSONS BEFORE COMMENCING ANY WORK

ROOF TOP DRAIN INFORMATION

BUILDING	ROOFTOP STORAGE VOLUME (m^3)	MAX DEPTH OF FLOW (mm)	LOCATION OF ROOF DRAIN AND SCUPPERS	NUMBER OF ROOF DRAINS	FLOW PER ROOF DRAIN (L/s)	TOTAL FLOW FROM ROOF (L/s)
A – PROPOSED CONVIENCE STORE	7.0 / 5–yr 15.8 / 100–yr	98.1 / 5–yr 129.2 / 100–yr	SEE LOCATION ON PLAN	2	1.47 / 5–yr 1.93 / 100–yr	2.93 / 5–yr 3.86 / 100–yr
B – EXISTING CAR WASH	0.6 / 5–yr 1.4 / 100–yr	68.8 / 5–yr 97.0 / 100–yr	AS PER EXISTING CONDITIONS	2	1.03 / 5–yr 1.45 / 100–yr	2.06 / 5–yr 2.90 / 100–yr
C – PROPOSED GAS PUMP CANOPY	3.4 / 5–yr 8.0 / 100–yr	90.2 / 5–yr 120.4 / 100–yr	SEE LOCATION ON PLAN	2	1.35 / 5–yr 1.80 / 100–yr	2.70 / 5–yr 3.60 / 100–yr

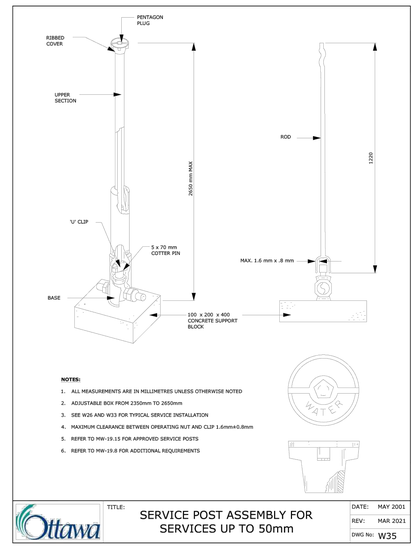

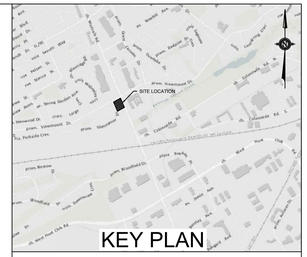

KEY PLAN

TOPOGRAPHIC INFORMATION & BENCHMARK

TOPOGRAPHIC SURVEY COMPLETED BY VRSB ON MARCH 20th TO 22nd, 2023. ELEVATIONS SHOWN ARE GEODETIC AND ARE REFERRED TO THE CGVD-28 GEODETIC DATUM.

SITE BENCHMARK No.1 LOCATED ON NORTH WEST INTERSECTION OF MERIVALE ROAD. AND VIEWMOUNT DRIVE. FIRE HYDRANT TOP OF NUT ELEVATION = 89.19

LEGAL PLAN

LEGAL SURVEY COMPLETED BY FARLEY, SMITH & DENIS SURVEYING LTD. ON APRIL 21st, 2023. BEARINGS ARE ASTRONOMIC AND ARE REFERRED TO THE WESTERLY LIMIT OF MERIVALE ROAD HAVING A BEARING OF N 22° 18' 30" W AS SHOWN ON REGISTERED PLAN 401392.

NOTES: SEWER

1. ALL CATCH BASIN, TRENCH DRAIN, MAINTENANCE HOLE COVERS AND OTHER STORM SEWER CONNECTION SHALL BE EQUIPPED WITH NITRILE RUBBER GASKET
2. CONTRACTOR TO CONFIRM ELEVATION OF EXISTING STORM AND SANITARY SEWERS AT PROPOSED CONNECTION POINTS AND REPORT ANY DISCREPANCIES TO THE ENGINEER BEFORE COMMENCING ANY WORK.
3. ALL WORK SHALL BE PERFORMED, AS APPLICABLE IN ACCORDANCE WITH OPSS 407, AND 410.
4. PIPE MATERIAL TO BE PVC SDR-35 AND CONFORMING TO OPSS 1841, UNLESS INDICATED OTHERWISE. PVC SEWERS TO BE INSTALLED PER OPSD 802.010 (MODIFIED). BEDDING AND COVER MATERIALS TO BE OPSS 1010 GRANULAR 'A' CRUSHER-RUN LIMESTONE BEDDING COMPACTED TO 95% SPMDD.
5. ALL SEWERS WITH LESS THAN 1.8 METERS OF COVER ARE SUBJECTED TO INSULATION DETAIL S35 OF THE CITY OF OTTAWA ON DRAWING C-104
6. PIPE BACKFILL MATERIAL TO BE APPROVED NATIVE MATERIAL OR SELECT SUBGRADE MATERIAL IN CONFORMANCE WITH OPSS 212.
7. ALL MAINTENANCE HOLES AND CATCH BASIN MAINTENANCE HOLES TO BE 1200mmØ AS PER OPSD 701.010, UNLESS INDICATED OTHERWISE. MAINTENANCE HOLES AND CATCH BASIN MAINTENANCE HOLES TO BE INSTALLED PER OPSS 407.
8. ALL CATCH BASINS TO BE 600x600mm AS PER OPSD 705.010, UNLESS INDICATED OTHERWISE. CATCH BASINS TO BE INSTALLED PER OPSS 407.
9. EXCAVATING, BACKFILLING, AND COMPACTING REQUIRED FOR MAINTENANCE HOLES, CATCH BASIN MAINTENANCE HOLES, AND CATCH BASINS TO BE COMPLETED AS PER OPSS 402. THEY ARE TO BE BACKFILLED WITH OPSS GRANULAR 'B' COMPACTED TO 98% SPMDD. JOINTS BETWEEN SECTIONS TO BE WRAPPED WITH NON-WOVEN GEOTEXTILE.
10. FOR SANITARY STRUCTURES: CAST IRON CATCH BASIN MAINTENANCE HOLE COVER AS PER OPSD 401.010 TYPE 'A'.
11. FOR STORM STRUCTURES: CAST IRON CATCH BASIN MAINTENANCE HOLE COVER AS PER OPSD 401.010 TYPE 'B' AND CAST IRON CATCH BASIN COVER AS PER OPSD 400.020.
12. SANITARY MAINTENANCE HOLES REQUIRE BENCHING AS PER OPSD 701.021.
13. THE CONTRACTOR IS RESPONSIBLE FOR MAKING OR ARRANGING ALL CONNECTIONS TO THE EXISTING SEWERS AS PER MUNICIPAL REQUIREMENTS. PRIOR TO CONNECTION, THE CONTRACTOR MUST PROVIDE, TO THE CONSULTANT / ENGINEER AND THE CITY FOR APPROVAL, ALL TEST RESULTS PERFORMED ON THE INTERNAL SERVICES.
14. ADVISE THE CITY PUBLIC WORKS AT LEAST 72 HOURS IN ADVANCE BEFORE ANY CONNECTION TO THE CITY SERVICES. CO-ORDINATE WITH CITY OF OTTAWA AS REQUIRED.
15. TERMINATE AND PLUG ALL SERVICE CONNECTIONS AT 1.0 m FROM EDGE OF THE BUILDING.
16. ALL SEWERS TO BE C.C.T.V. INSPECTED BY THE CONTRACTOR AS PER OPSS 409. TWO COPIES OF THE INSPECTION REPORT MUST BE PROVIDED TO THE CONSULTANT AND THE C.C.T.V. INSPECTION IN DVD FORMAT ONLY.
17. SUBDRAIN KNOCKOUT (KO) WILL BE PRE-MANUFACTURED WITH CATCH BASINS AND MAINTENANCE HOLES.
18. THE STORMWATER TSS QUALITY REQUIREMENTS WILL BE ACHIEVED BY INSTALLING A EFO-04 OR EQUIVALENT TO ACHIEVE 80% TSS REMOVAL. THE OILGRIT SEPARATOR IS TO HAVE A SEDIMENT CAPACITY OF 1190L, AN OIL CAPACITY OF 265L, AND FOR A MAXIMUM TREATMENT FLOW RATE OF 12.9 L/s.
19. OGS WILL REQUIRE PERIODIC MAINTENANCE AND CLEANING AS PER MANUFACTURERS SPECIFICATIONS - TYPICAL CLEANING INTERVAL IS ONCE A YEAR. ANNUAL CLEANING AGREEMENT NEEDS TO BE WITNESSED BY THE CITY.
20. ALL BUILDINGS FOUNDATION DRAINS TO BE CONNECTED TO THE STORM SEWER DOWNSTREAM OF THE ICD.

NOTES: WATERMAIN

1. ALL WATERMAIN TO BE INSTALLED AT MINIMUM COVER OF 2.4m BELOW FINISHED GRADE. WHERE THE MINIMUM COVER OF 2.4m IS NOT REACHED, THERMAL INSULATION IS REQUIRED AS PER CITY OF OTTAWA DETAIL W22.
2. WATERMAIN PIPE MATERIALS TO BE CLASS PVC DR-18, OR APPROVED EQUIVALENT, UNLESS INDICATED OTHERWISE.
3. WATERMAIN TO BE CONSTRUCTED AS PER OPSS 441 AND OPSD 802.010. WATERMAIN BEDDING AND COVER MATERIAL TO BE OPSS 1010 GRANULAR 'A' CRUSHER-RUN LIMESTONE COMPACTED TO 95% SPMDD.
4. A CONTINUOUS 12 GAUGE COPPER TRACER WIRE MUST BE INSTALLED OVER ALL WATERMAINS. TRACER WIRE SHALL BE TIED TO ALL FIRE HYDRANTS.
5. INSTALLATION OF A WATERMAIN PIPE CROSSING A SEWER PIPE SHALL BE AS PER CITY OF OTTAWA DETAILS W25 AND W25.2.
6. IF WATERMAIN PIPE MUST BE DEFLECTED TO MEET ALIGNMENT, ENSURE THAT THE AMOUNT OF DEFLECTION USED IS LESS THAN HALF THAT RECOMMENDED BY THE MANUFACTURER.
7. CATHODIC PROTECTION REQUIRED FOR ALL IRON FITTINGS AS PER OPSD 1109.011.
8. THRUST BLOCKS AND RESTRAINING AS PER OPSD 1103.010 AND OPSD 1103.020.
9. HYDRANT INSTALLATION AS PER OPSD 1105.010 AND OPSS 441. HYDRANT TO COMPLY WITH AWWA C502.
   a. HYDRANTS MUST HAVE THREE EXITS (TWO 65.5 mm AND ONE 100.0 mm 'STORZ' OF STAINLESS STEEL) WITH DRAIN. FIRE HYDRANTS MUST BE INSTALLED SUCH THAT THE 'STORZ' EXIT POINTS TOWARDS THE BUILDING IT WILL SERVICE. THE CONTRACTOR MUST ENSURE THAT THE BREAKAWAY FLANGE IS LOCATED ABOVE THE FINISHED GROUND (APPROXIMATELY 150 mm).
   b. FIRE FLOW TESTS FOLLOWED BY COLOUR CODING OF HYDRANTS (AS PER NFPA-291) SHALL BE CARRIED OUT PRIOR TO SUBSTANTIAL COMPLETION OF THE WORK.
10. WATERMAIN AND HYDRANT CONTROL VALVES IN THE 100 – 300 mm RANGE WILL BE RESILIENT SEATING GATE VALVES (AWWA C509) WITH MECHANICAL JOINT CONNECTIONS. VALVES WILL OPERATE COUNTER-CLOCKWISE TO OPEN WITH A NON-RISING STEM. VALVES WILL BE COMPLETE WITH THE STANDARD AWWA 50 mm OPERATING NUT. VALVES TO BE INSTALLED AS PER OPSS 441.
11. PIPE FITTINGS (BENDS, TEES, CROSSES, REDUCERS, ETC.) WILL BE MECHANICAL JOINT (AWWA C-111) WITH CEMENT MORTAR LINING (AWWA C-104).
12. COUPLERS MUST BE COMPRESSION TYPE WITH MINIMUM PRESSURE RATING OF 1035 kPa. COUPLERS MUST BE MUELLER 11-12940.
13. VALVE BOXES MUST BE COMPLETE (FULLY METALLIC) 3 PIECE SLIDING TYPE WITH GUIDE PLATES.
14. WATERMAINS MUST BE THOROUGHLY FLUSHED AND CLEANED TO REMOVE ALL DIRT AND DEBRIS PRIOR TO THE DISINFECTION PROCESS.
15. ALL WATERMAINS SHALL BE HYDROSTATICALLY AND BACTERIOLOGICALLY TESTED AS PER PROVINCIAL AND MUNICIPAL REGULATIONS. IT IS THE CONTRACTOR'S RESPONSIBILITY TO ENSURE THAT ALL REQUIREMENTS ARE FOLLOWED.
16. THE DISINFECTION PROCEDURE WHICH FOLLOWS INITIAL FLUSHING AND CLEANING CONSISTS OF CHLORINATION, FINAL FLUSHING AND BACTERIOLOGICAL TESTING. DISINFECTION MUST BE PERFORMED BY THE CONTRACTOR USING METHODS APPROVED BY THE CITY OF OTTAWA AND IN ACCORDANCE WITH MINISTRY OF ENVIRONMENT AND CLIMATE CHANGE GUIDELINES. DOSAGE MUST BE 100 ppm WITH A MINIMUM RESIDUAL OF 25 ppm AFTER 24 HOURS. DISINFECTANT MUST BE SUPPLIED BY THE CONTRACTOR AND MUST BE ANSI APPROVED. TESTING AND TEST RESULTS MUST BE WITNESSED BY CITY OF OTTAWA PERSONNEL.
17. ALL DISINFECTANT WATER IS TO BE REMOVED FROM THE NEW WATERMAINS AND REPLACED WITH DISTRIBUTION SYSTEM WATER PRIOR TO PRESSURE TESTING OF THE WATERMAIN.
18. PRESSURE TESTING OF ALL WATERMAINS AND APPURTENANCES INSTALLED BY THE CONTRACTOR MUST BE PERFORMED BY THE CONTRACTOR USING METHODS MEETING THE APPROVAL OF THE CITY OF OTTAWA. TESTING AND RESULTS MUST BE WITNESSED BY CITY OF OTTAWA PERSONNEL.
19. MAINS AND SERVICES MUST BE PRESSURE TESTED AT 1035 kPa (150 psi) IN ACCORDANCE WITH AWWA C-600-82 (MINIMUM REQUIREMENT).
20. LEAKAGE TESTS MUST BE CONDUCTED AS PER AWWA C-600-82 (MINIMUM REQUIREMENT).
21. ONCE THE DISINFECTION AND PRESSURE TESTING RESULTS HAVE BEEN APPROVED, THE CONTRACTOR MUST ENSURE THAT ALL WATERMAIN PIPES ARE FLUSHED UNTIL THE CHLORINE LEVEL IN THE WATER IS SIMILAR TO THE LEVEL OF CHLORINE IN THE MUNICIPAL WATERMAIN NETWORK IN THE AREA.
22. BACTERIOLOGICAL TESTING MUST CONSIST OF TWO SAMPLINGS TWENTY FOUR HOURS APART. IF BACTERIOLOGICAL SAMPLES ARE SATISFACTORY THE WATERMAIN MAY BE PLACED ON LINE.
23. ALL WATERMAIN VALVES TO BE OPERATED BY THE CITY OF OTTAWA ONLY.

UNDERGROUND STORMWATER STORAGE

1. UNDERGROUND STORMWATER STORAGE SYSTEM PIPE TYPE OR EQUIVALENT STORAGE REQUIREMENT: 79m³
2. CHAMBER TYPE: LANDMAX 1050mmØ OR EQUIVALENT
3. BOTTOM OF GRANULAR PAD ELEVATION: 84.09m
4. PIPE INVERT ELEVATION: 84.33m
5. PIPE OBVERT ELEVATION: 85.38m
6. TOP OF PIPE ELEVATION: 85.47m
7. TOP OF SYSTEM TO BE A MINIMUM OF 750mm BELOW PARKING LOT PAVEMENT STRUCTURE.

TRENCH DRAIN REQUIREMENTS:

1. MINIMUM GRATE WIDTH OF 300mm
2. MINIMUM GRATE LENGTH OF 1000mm
3. STEEL OR STAINLESS STEEL GRATE STRONG ENOUGH TO WITHSTAND CAR & TRUCK LOAD. AS PER MANUFACTURER
4. EXPANSION JOINT REQUIRED IN BETWEEN CAR WASH ENTER/EXIT CONCRETE SLAB AND TRENCH DRAIN
5. SHOP DRAWING BY MANUFACTURER TO BE PROVIDE PRIOR TO INSTALLATION.

No.	DATE	DESCRIPTION	BY
05	2025-12-18	ISSUED FOR SPA - REV04	M.T.
04	2025-09-05	ISSUED FOR SPA - REV03	M.T.
03	2025-04-01	ISSUED FOR SPA - REV02	M.T.
02	2025-02-19	ISSUED FOR SPA - REV01	M.T.
01	2024-03-21	ISSUED FOR SPA	M.T.

REVISIONS

LICENSED PROFESSIONAL ENGINEER
P. CHARLEBOIS
100564967
12/18/2025
PROVINCE OF ONTARIO

5m 0 5 10m
SCALE: 1:250

PARSONS
1223 Michael Street, Suite 100, Ottawa, Ontario, Canada K1J 7T2
Tel: (613) 738-4160 Fax: (613) 739-7105

CLIENT
HARNOIS ÉNERGIES

PROJECT
CONVENIENCE STORE/RESTO
1660 MERIVALE
NEPEAN, ONTARIO

TITLE
SITE SERVICING PLAN

DESIGNED BY	P.C.	PROJECT NO.	478684
DRAWN BY	P.C.	C-102	SS
CHECKED BY	M.T.		
DATE	MAY 2025		
SCALE	1:250	DRAWING NO.	DRAWING

File #: D07-12-25-0019
Plan #: 19270

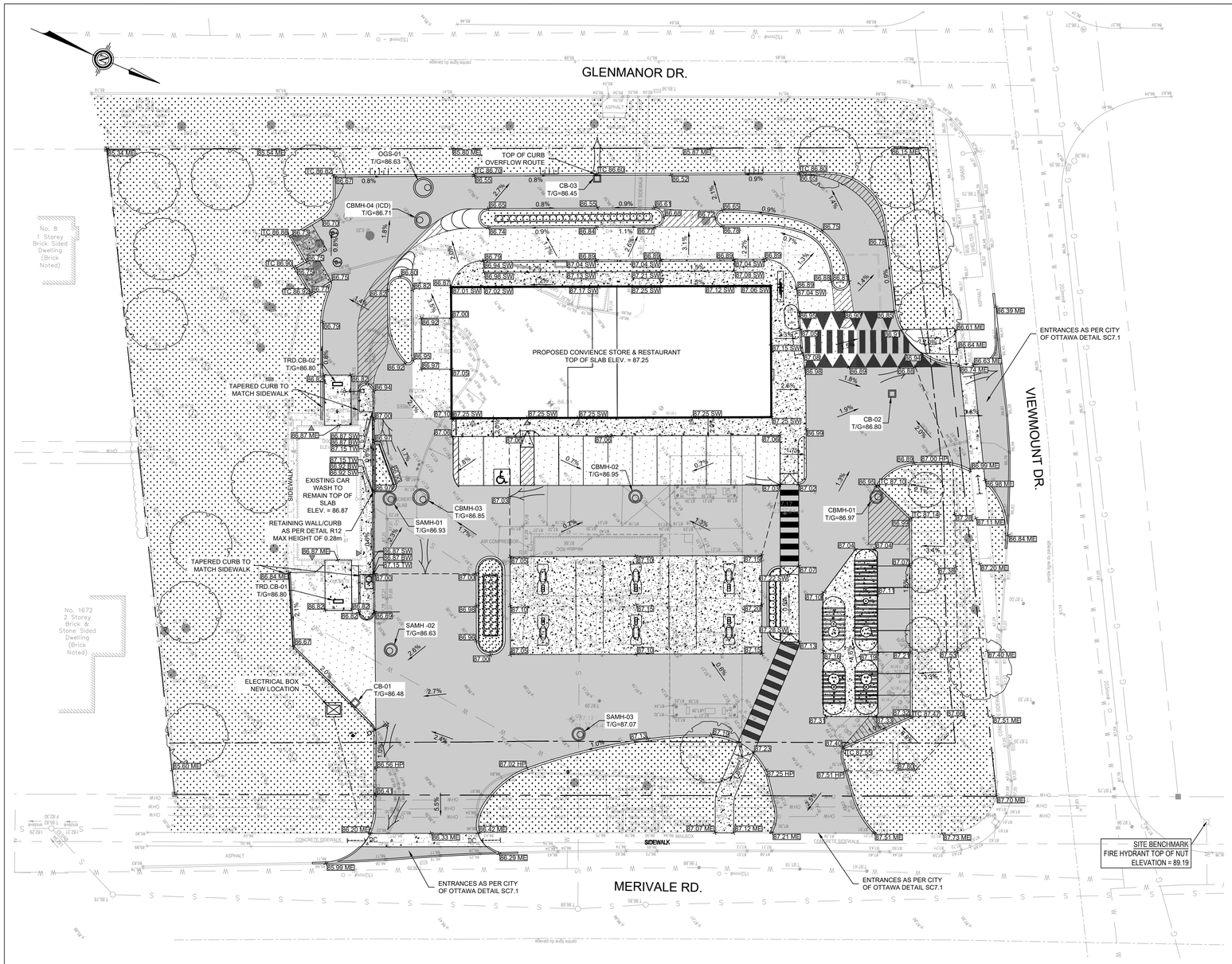

LEGEND:

	EXISTING PROPERTY LINE
	PROPOSED NEW PROPERTY LINE DUE TO RIGHT-OF-WAY WIDENING
	TERRACE (3:1 MAX)
99.99	EXISTING GRADE
99.99	PROPOSED GRADE
99.99 TW	PROPOSED TOP OF WALL GRADE
99.99 BW	PROPOSED BOTTOM OF WALL GRADE
99.99 FF	PROPOSED FINISHED FLOOR ELEVATION
99.99 SW	PROPOSED TOP OF SIDEWALK ELEVATION
99.99 ME	MATCH EXISTING ELEVATION
99.9%	PROPOSED SURFACE SLOPE
	PROPOSED SANITARY MAINTENANCE HOLE
	PROPOSED STORM MAINTENANCE HOLE
	PROPOSED CATCH BASIN
	PROPOSED TRENCH DRAIN
	PROPOSED CURB
	GRADE BREAK LINE
	PROPOSED DEPRESSED CONCRETE CURB WITH TWSI PER CITY STD DWG SC7.3
	MAJOR OVERLAND FLOW ROUTE
	PROPOSED LIGHT DUTY PAVEMENT
	PROPOSED HEAVY DUTY PAVEMENT
	PROPOSED CONCRETE SIDEAWLK
	PROPOSED LANDSCAPE

PAVEMENT STRUCTURES		
MATERIAL	LIGHT DUTY	HEAVY DUTY
Asphaltic Concrete Surface Course: HL-3 (OPSS 1150) (PG 58-34) OR SUPERPAVE 12.5	60 mm	40 mm
Asphaltic Concrete Binder Course: HL-8 (OPSS 1150) (PG 58-34) OR SUPERPAVE 19.0	-	60 mm
Granular Base: OPSS 1010 Granular A	225 mm	200 mm
Granular Sub-base: OPSS 1010 Granular B, Type II	350 mm	450 mm
Geotextile membrane as per OPSS	YES	NO

FROM: ÉTUDE GÉOTECHNIQUE ET CARACTÉRISATION ENVIRONMENTALE DES SOLS - RÉFECTION D'UNE STATION D'ESSENCE. 1660 MERIVALE, NEAPEAN, ONTARIO, BY SCPGEOTEK. DATED MAI 2023

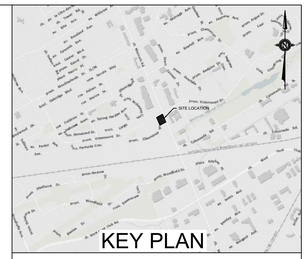

TOPOGRAPHIC INFORMATION & BENCHMARK

TOPOGRAPHIC SURVEY COMPLETED BY VRSB ON MARCH 20th TO 22nd, 2023. ELEVATIONS SHOWN ARE GEODETIC AND ARE REFERRED TO THE CGVD-28 GEODETIC DATUM.

SITE BENCHMARK No.1 LOCATED ON NORTH WEST INTERSECTION OF MERIVALE ROAD. AND VIEWMOUNT DRIVE. FIRE HYDRANT TOP OF NUT ELEVATION = 89.19

LEGAL PLAN

LEGAL SURVEY COMPLETED BY FARLEY, SMITH & DENIS SURVEYING LTD. ON APRIL 21st, 2023. BEARINGS ARE ASTRONOMIC AND ARE REFERRED TO THE WESTERLY LIMIT OF MERIVALE ROAD HAVING A BEARING OF N 22° 18' 30" W AS SHOWN ON REGISTERED PLAN 401392.

No.	DATE	DESCRIPTION	BY
05	2025-12-18	ISSUED FOR SPA - REV04	M.T.
04	2025-09-05	ISSUED FOR SPA - REV03	M.T.
03	2025-04-01	ISSUED FOR SPA - REV02	M.T.
02	2025-02-19	ISSUED FOR SPA - REV01	M.T.
01	2024-03-21	ISSUED FOR SPA	M.T.

REVISIONS

LICENSED PROFESSIONAL ENGINEER
P. CHARLEBOIS
100564967
12/18/2025
PROVINCE OF ONTARIO

5m 0 5 10m
SCALE: 1:250

NOTES: GENERAL

1. THE CONTRACTOR MUST CONFORM TO ALL LAWS, CODES, ORDINANCES, AND REGULATIONS ADOPTED BY FEDERAL, PROVINCIAL OR MUNICIPAL GOVERNMENT COUNCILS AND GOVERNMENT AGENCIES, APPLYING TO WORK TO BE CARRIED OUT, WHEREVER STANDARDS, LAWS AND/OR REGULATIONS ARE MENTIONED THEY REFER TO THEIR CURRENT VERSIONS, MODIFICATIONS INCLUDED.
2. ALL MATERIALS AND CONSTRUCTION METHODS SHALL BE IN ACCORDANCE WITH THE LATEST EDITION OF THE ONTARIO PROVINCIAL STANDARD SPECIFICATIONS AND DRAWINGS (OPSS AND OPSD), THE ONTARIO MINISTRY OF ENVIRONMENT AND CLIMATE CHANGE, THE ONTARIO MINISTRY OF NATURAL RESOURCES, APPLICABLE CONSERVATION AUTHORITIES, THE MUNICIPAL STANDARD SPECIFICATIONS AND DRAWINGS, AND ALL OTHER GOVERNING AUTHORITIES AS THEY APPLY, UNLESS OTHERWISE INDICATED.
3. ALL MATERIAL SUPPLIED AND PLACED FOR PARKING LOT AND ACCESS ROAD CONSTRUCTION SHALL BE TO OPSS STANDARDS AND SPECIFICATIONS UNLESS OTHERWISE NOTED. CONSTRUCTION TO OPSS 206, 310 & 314. MATERIALS TO OPSS 1001, 1003 & 1010.
4. THE LOCATION OF EXISTING UNDERGROUND MUNICIPAL SERVICES AND PUBLIC UTILITIES AS SHOWN ON THE PLANS ARE APPROXIMATE. THE CONTRACTOR MUST DETERMINE THE EXACT LOCATION, SIZE, MATERIAL AND ELEVATION OF ALL EXISTING UTILITIES (ON-SITE AND OFF-SITE). PRIOR TO ANY EXCAVATION WORK. DAMAGE TO ANY EXISTING SERVICES AND/OR EXISTING UTILITIES DURING CONSTRUCTION, WHETHER OR NOT SHOWN ON THE DRAWINGS MUST BE REPAIRED BY THE CONTRACTOR AT HIS OWN EXPENSE.
5. THE CONTRACTOR SHALL DETERMINE THE EXACT INVERT (GEODETIC ELEVATION), DIAMETER AND CONSTRUCTION MATERIAL OF THE EXISTING CONDUITS AT THE PROPOSED CONNECTIONS. THEY SHALL ALSO CARRY OUT, IF NECESSARY, EXPLORATORY DIGS IN ORDER TO DETERMINE THE EXACT LOCATION AND INVERTS OF EXISTING DUCK BANKS. THIS INFORMATION SHALL IMMEDIATELY BE PROVIDED TO THE CONSULTANT PRIOR TO START UNDERTAKING ANY MUNICIPAL SERVICES WORK AND A 48 HOUR PERIOD MUST BE ALLOCATED TO THE CONSULTANT FOR DESIGN REVIEW.
6. AT PROPOSED UTILITY CONNECTION POINTS AND CROSSINGS (I.E. STORM SEWER, SANITARY SEWER, WATER, ETC.) THE CONTRACTOR SHALL DETERMINE THE PRECISE LOCATION AND DEPTH OF EXISTING UTILITIES AND REPORT ANY DISCREPANCIES OR CONFLICTS TO THE ENGINEER BEFORE COMMENCING WORK.
7. CONTRACTOR IS RESPONSIBLE FOR ALL LAYOUT FOR CONSTRUCTION PURPOSES.
8. THE CONTRACTOR IS RESPONSIBLE FOR THE COORDINATION OF ALL WORK AND ACTIVITIES WITH OTHERS TRADES AND CONTRACTORS.
9. THE CONTRACTOR IS THE ONLY PERSON IN CHARGE OF SAFETY ON THE BUILDING SITE. THE CONTRACTOR IS RESPONSIBLE FOR PROVIDING ADEQUATE PROTECTION OF THE WORKERS, OTHER PERSONNEL AND THE GENERAL PUBLIC, PROTECTION OF MATERIALS, AS WELL AS MAINTAINING IN GOOD CONDITION THE COMPLETED WORKS AND WORKS TO BE COMPLETED. THE CONTRACTOR MUST PROVIDE AT ANY TIME:
   a. A SUFFICIENT NUMBER OF FENCES, BARRIERS, POSTERS, GUARDS AND OTHERS TO ENSURE SAFETY;
   b. NECESSARY CONVENIENCES FOR THE COMPLETION OF WORK SUCH AS HEATING, LIGHTING, VENTILATION ETC.
10. CONTRACTOR IS RESPONSIBLE TO OBTAIN THE VARIOUS PERMITS/APPROVALS REQUIRED TO COMPLETE ALL THE WORKS AND ACTIVITIES AND BEAR COST OF THE SAME, SUCH AS BUT NOT LIMITED TO; ROAD CUT PERMITS, SEWER PERMITS, WATER PERMIT, ETC. AND THEIR ASSOCIATED COSTS.
11. ALL ELEVATIONS ARE GEODETIC AND UTILIZE METRIC UNITS.
12. JOB BENCH MARK - CONFIRM WITH PARSONS PRIOR TO UTILIZATION. THE CONTRACTOR MUST MAINTAIN BENCHMARKS AND LANDMARK REFERENCES AS IS. OTHERWISE THESE REFERENCES WILL BE REPOSITIONED BY A CERTIFIED LAND SURVEYOR AT THE CONTRACTOR'S EXPENSE.
13. ALL GROUND SURFACES SHALL BE EVENLY GRADED WITHOUT PONDING AREAS AND LOW POINTS EXCEPT WHERE APPROVED SWALE OR CATCH BASIN OUTLETS ARE PROVIDED.
14. IF GROUNDWATER IS ENCOUNTERED DURING CONSTRUCTION, DEWATERING OF EXCAVATIONS COULD BE REQUIRED. IT IS ASSUMED THAT GROUNDWATER MAY BE CONTROLLED BY SUMP AND PUMPING METHODS. THE CONTRACTOR SHALL OBTAIN A PERMIT TO TAKE WATER IF SITE CONDITIONS REQUIRE TAKING MORE THAN A TOTAL OF 400 000 L/DAY.
15. STRIP AND REMOVE ALL TOPSOIL FROM IMPROVED AREAS. SITE PREPARATION INCLUDES CLEARING, GRUBBING, STRIPPING OF TOPSOIL, DEMOLITION, REMOVAL OF UNSUITABLE MATERIALS, CUT, FILL AND ROUGH GRADING OF ALL AREAS TO RECEIVE FINISHED SURFACES.
16. ABUTTING PROPERTY GRADE TO BE MATCHED.
17. ALL EDGES OF DISTURBED PAVEMENT SHALL BE SAW CUT TO FORM A NEAT AND STRAIGHT LINE PRIOR TO PLACING NEW PAVEMENT. PAVEMENT REINSTATEMENT SHALL BE WITH STEP JOINTS OF 300mm WIDTH MINIMUM.
18. CURBS TO BE BARRIER, CONSTRUCTED AS PER OPSD 600.110, EXCEPT WHERE INDICATED OTHERWISE. ELEVATION AT TOP OF CONCRETE CURBS TO BE 150 mm ABOVE THE ASPHALT, UNLESS OTHERWISE INDICATED ON THE DRAWINGS.
19. DEPRESSED CURBS TO BE MOUNTABLE, CONSTRUCTED AS PER OPSD 600.100.
20. LIGHT DUTY AND HEAVY DUTY ASPHALT PAVEMENTS TO BE CONSTRUCTED AS PER TABLE ON DRAWING C103.
21. TRANSITION BETWEEN EXISTING AND PROPOSED PAVEMENT SHALL BE CONSTRUCTED AS PER DETAIL D3 ON DRAWING C104.
22. RESTORE PAVEMENT STRUCTURE AND SURFACES ON EXISTING ROADS TO A CONDITION AT LEAST EQUAL TO ORIGINAL AND TO THE SATISFACTION OF THE CITY AUTHORITIES.
23. CLEANLINESS ON THE SITE, INCLUDES THE CONTRACTOR SHALL CLEAN ROADWAYS AT HIS OWN COST AS DIRECTED BY THE OWNER'S REPRESENTATIVE, MATERIALS AND EQUIPMENT MUST BE LAID OUT IN AN ORGANIZED AND SAFE MANNER, AND ALL MATERIAL, EQUIPMENT AND TEMPORARY STRUCTURES WHICH ARE NO LONGER NECESSARY FOR THE EXECUTION OF THE CONTRACT MUST BE REMOVED FROM THE SITE.
24. CONTRACTOR TO ENSURE MITIGATION MEASURES ARE IMPLEMENTED TO REDUCED THE RISK OF GROUND CONTAMINATION FROM PETROLEUM PRODUCTS.
25. THE CONTRACTOR MUST ENSURE THE FOLLOWING MEASURES ARE IMPLEMENTED REGARDING THE HANDLING OF CONCRETE:
   a. CONCRETE SHOULD EITHER BE MIXED AWAY FROM THE SITE OR SHOULD BE PREPARED ON PAVED SURFACES IF ONLY SMALL QUANTITIES ARE REQUIRED (I.E. MINOR REPAIRS);
   b. EXCESS CONCRETE MUST BE DISPOSED OFF-SITE AT A LOCATION THAT MEETS ALL REGULATORY REQUIREMENTS;
   c. THE WASHING OF CONCRETE TRUCKS AND OTHER EQUIPMENT USED FOR MIXING CONCRETE SHOULD NOT BE CARRIED OUT WITHIN 30 METERS OF A WATERCOURSE OR WETLAND AND SHOULD TAKE PLACE OUTSIDE OF THE WORK SITE;
   d. ALL CONCRETE TRUCKS SHOULD COLLECT THEIR WASH WATER AND RECYCLE IT BACK INTO THEIR TRUCKS FOR DISPOSAL OFF-SITE AT A LOCATION MEETING ALL REGULATORY REQUIREMENTS.
26. THE CONTRACTOR SHALL ENSURE THAT ALL EXCAVATED SURPLUS MATERIALS THAT WILL BE REQUIRED TO BE DISPOSED OFFSITE BE STOCKPILED TEMPORALLY FOR SAMPLING PRIOR BEING LOADED OFFSITE.
27. MINIMIZE DISTURBANCE TO EXISTING VEGETATION DURING THE EXECUTION OF ALL WORKS.
28. TRENCHING, BACKFILLING AND COMPACTING MUST CONFORM TO OPSS 401.
29. DEWATERING OF PIPELINE, UTILITY AND ASSOCIATED STRUCTURE EXCAVATIONS TO BE COMPLETED AS PER OPSS 517.
30. THE CONTRACTOR MUST CONTROL SURFACE RUNOFF FROM PRECIPITATION DURING CONSTRUCTION.
31. FOR ALL GEOTECHNICAL WORK, CONTRACTOR TO REFER TO "GEOTECHNICAL INVESTIGATION, PROPOSED RESIDENTIAL DEVELOPMENT, 5581 DOCTOR LEACH DRIVE, OTTAWA, ONTARIO, BY PINCHIN LTD. DATED OCTOBER 12, 2022
32. REMOVE FROM SITE ALL EXCESS EXCAVATED MATERIAL UNLESS OTHERWISE DIRECTED FROM THE ENGINEER. EXCAVATE AND REMOVE ALL ORGANIC MATERIAL AND DEBRIS LOCATED WITHIN THE PROPOSED BUILDING, PARKING AND ROADWAY LOCATIONS.
33. THE CONTRACTOR IS RESPONSIBLE FOR ALL EXCAVATION, BACKFILL AND REINSTATEMENT OFF ALL AREAS DISTURBED DURING CONSTRUCTION TO EXISTING CONDITIONS OR BETTER AND ALL ASSOCIATED WORKS TO THE SATISFACTION OF THE CONSULTANT AND MUNICIPAL AUTHORITIES. ASPHALT REINSTATEMENT MUST BE IN ACCORDANCE WITH OPSS 310. LANDSCAPE AREAS TO BE REINSTATED WITH 150 mm OF TOPSOIL AND SOD IN ACCORDANCE WITH OPSS 802 AND OPSS 803.
34. DURING THE CONSTRUCTION PERIOD THE CONTRACTOR IS RESPONSIBLE FOR INSTALLING AND MAINTAINING TEMPORARY TRAFFIC SIGNAGE, INCLUDING TRAFFIC SIGNS, TRAFFIC MARKINGS AND TEMPORARY TRAFFIC LIGHTS, AND FLAGMEN, AS REQUIRED BY THE OWNER, THE CONSULTANT, THE MUNICIPALITY, THE MTO, AND OTHER GOVERNING AUTHORITIES.
35. CONSTRUCT SIDEWALK EXPANSION JOINTS & CONTROL JOINTS AS PER OPSD 310.020.
36. CONSTRUCT CONCRETE SIDEWALK AS PER OPSD 310.020 AND OPSS 351. TACTILE WALKING SURFACE INDICATORS PER OPSS 351.
37. DISPOSE OF CONTAMINATED MATERIALS AT APPROPRIATE OFF-SITE FACILITY THAT MEETS ALL REGULATORY REQUIREMENTS.
38. BE PREPARED TO INTERCEPT, CLEAN UP, AND DISPOSE OF SPILLS OR RELEASES THAT MAY OCCUR WHETHER ON LAND OR WATER. MAINTAIN MATERIALS AND EQUIPMENT REQUIRED FOR CLEANUP OF SPILLS OR RELEASES READILY ACCESSIBLE ON SITE.
39. PROMPTLY REPORT SPILLS AND RELEASES POTENTIALLY CAUSING DAMAGE TO ENVIRONMENT TO: AUTHORITY HAVING JURISDICTION OR INTEREST IN SPILL OR RELEASE INCLUDING CONSERVATION AUTHORITY, WATER SUPPLY AUTHORITIES, DRAINAGE AUTHORITY, ROAD AUTHORITY, AND FIRE DEPARTMENT.
40. DECONTAMINATE EQUIPMENT AFTER WORKING IN POTENTIALLY CONTAMINATED WORK AREAS AND PRIOR TO SUBSEQUENT WORK OR TRAVEL ON CLEAN AREAS.
41. DO NOT DISCHARGE DECONTAMINATED WATER, OR SURFACE WATER RUNOFF, OR GROUNDWATER WHICH MAY HAVE COME IN CONTACT WITH POTENTIALLY CONTAMINATED MATERIAL, OFF SITE OR TO MUNICIPAL SEWERS.
42. CONTRACTOR IS TO SUBMIT A TRAFFIC MANAGEMENT PLAN FOR APPROVAL ONE (1) WEEK PRIOR TO ANY WORK WITHIN THE ROW LIMITS TO MEET THE REQUIREMENTS OF MTO BOOK 7. THE CONTRACTOR WILL BE REQUIRED TO IMPLEMENT ALL REQUIREMENTS OF THE MTO BOOK 7.
43. CITY PUBLIC WORKS DEPARTMENT TO BE CONTACTED MINIMUM 7 DAYS PRIOR TO PLANNED DATE FOR CONNECTION TO EXISTING STORM SEWERS, SANITARY SEWERS, AND WATERMAIN. CONNECTION TO EXISTING TO TAKE PLACE IN THE PRESENCE OF APPROPRIATE CITY OF OTTAWA STAFF.
44. ALL THREE SITE ENTRANCES TO BE INSTALLED AS PER CITY OF OTTAWA STANDARD DETAIL SC7.1

PARSONS
1223 Michael Street, Suite 100, Ottawa, Ontario, Canada K1J 7T2
Tel: (613) 738-4160 Fax: (613) 739-7105

CLIENT
HARNOIS ÉNERGIES

PROJECT
CONVENIENCE STORE/RESTO
1660 MERIVALE
NEPEAN, ONTARIO

TITLE
GRADING PLAN

DESIGNED BY	P.C.	PROJECT NO.	478684
DRAWN BY	P.C.	C-103	GR
CHECKED BY	M.T.		
DATE	MAY 2025		
SCALE	1:250	DRAWING NO.	DRAWING

File #: D07-12-25-0019
Plan #: 19270

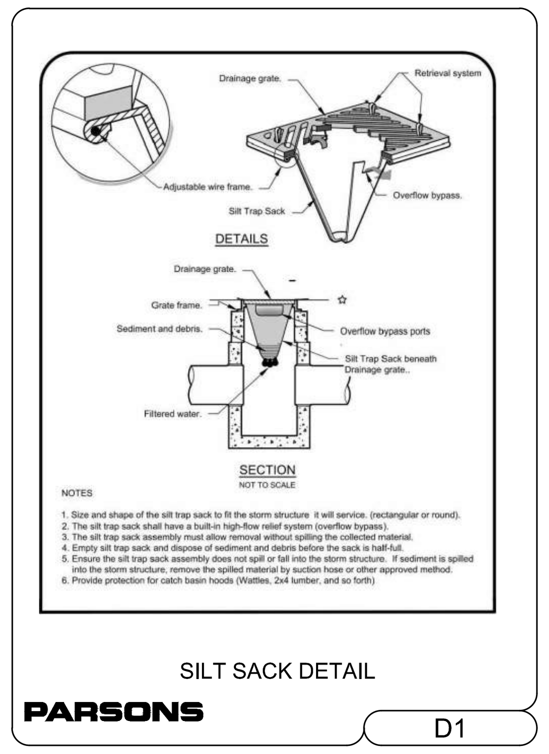

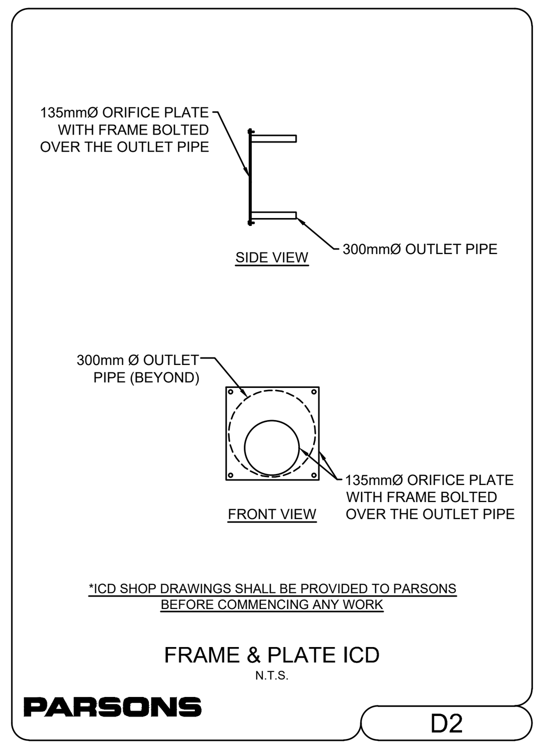

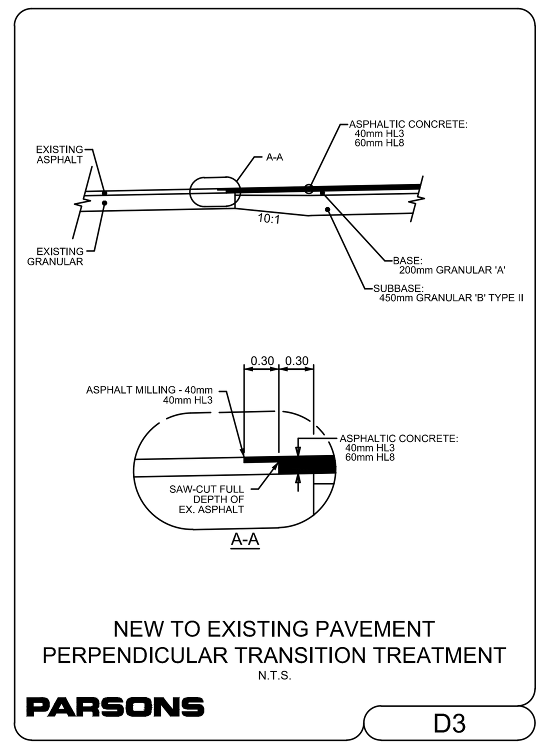

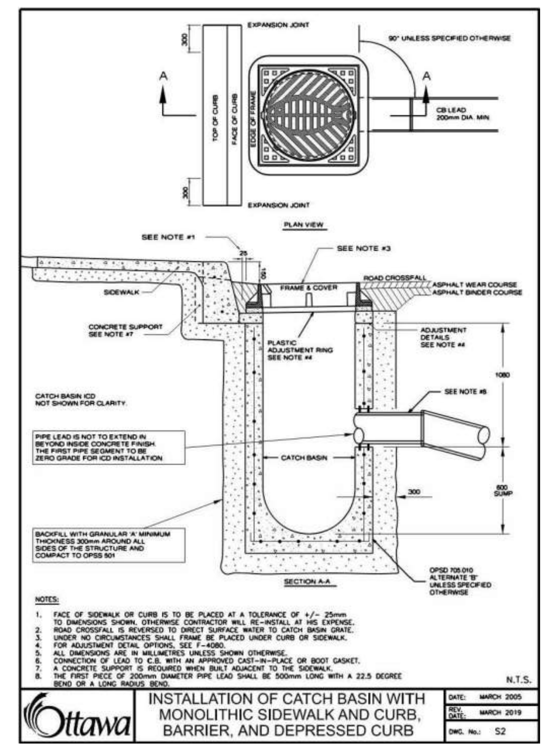

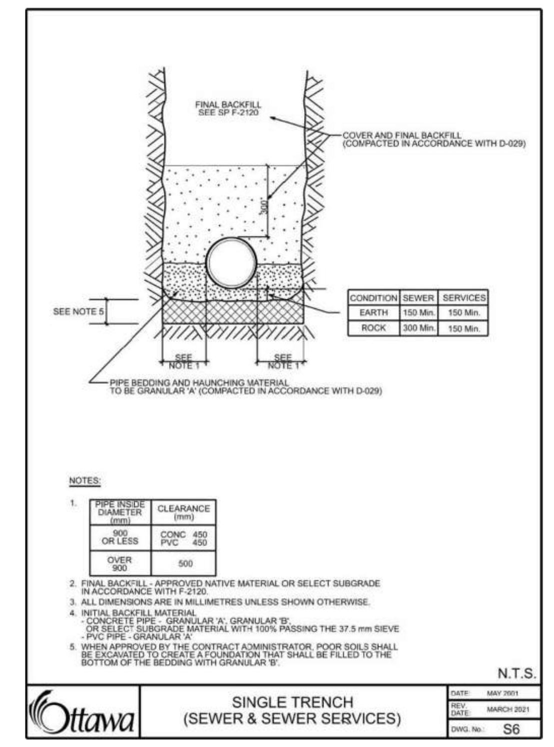

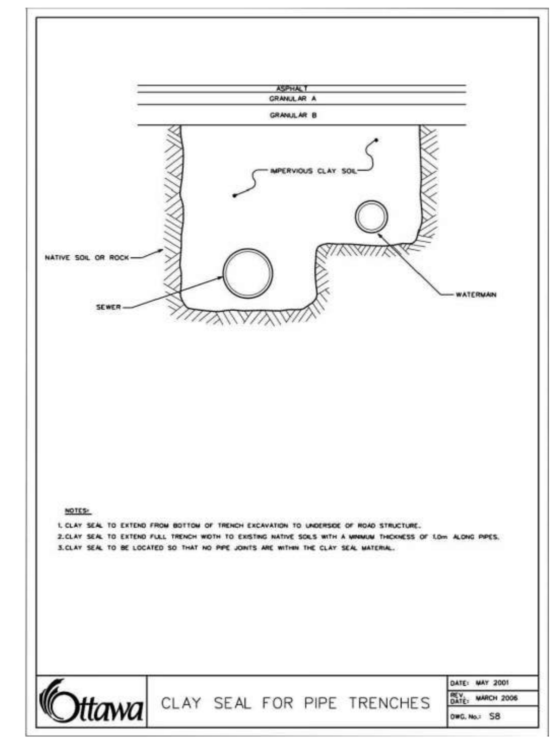

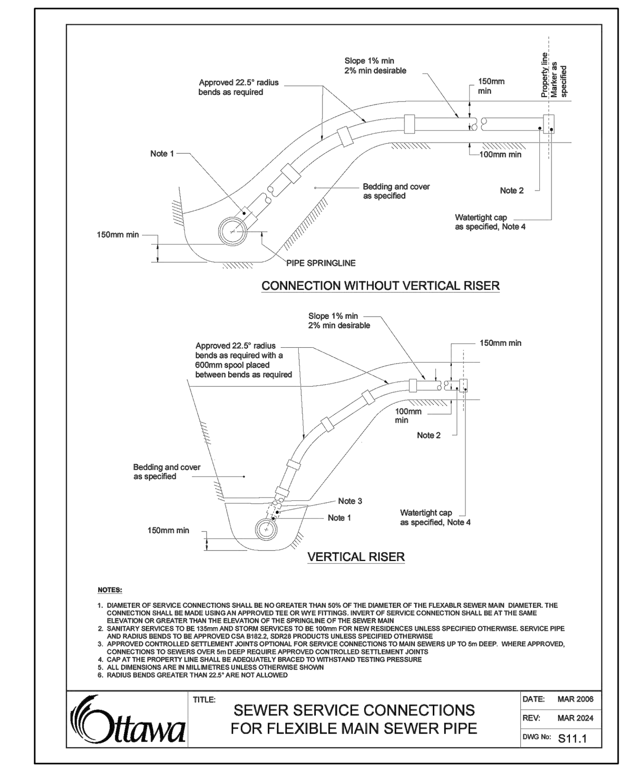

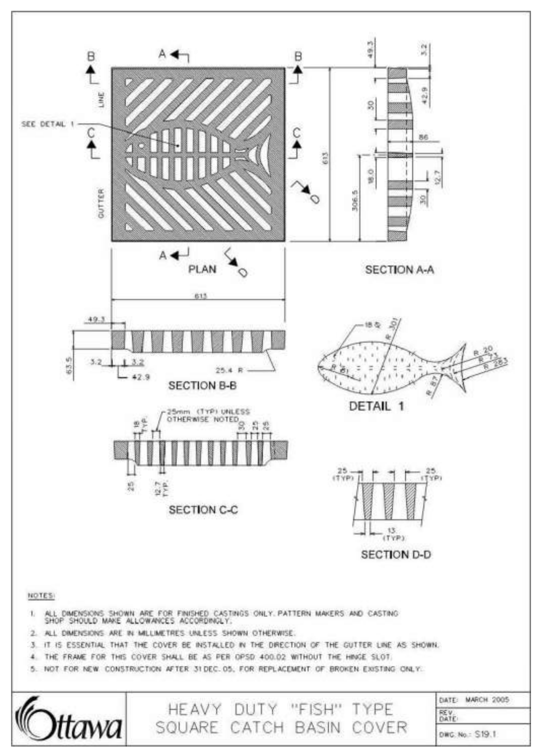

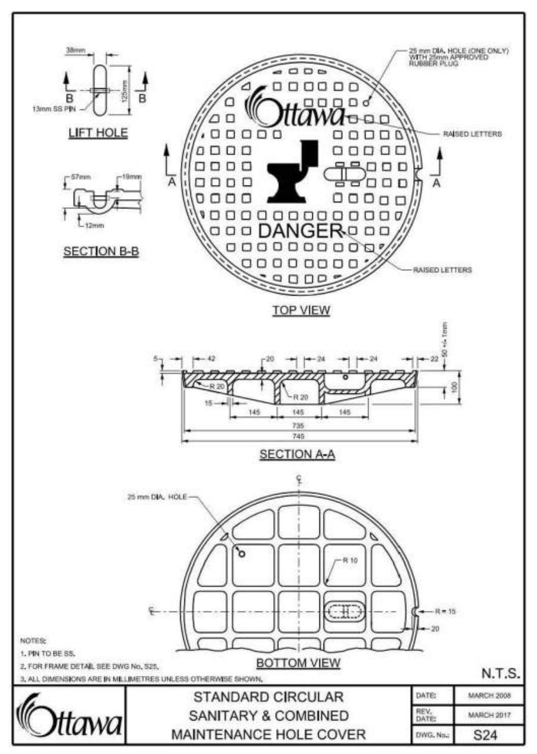

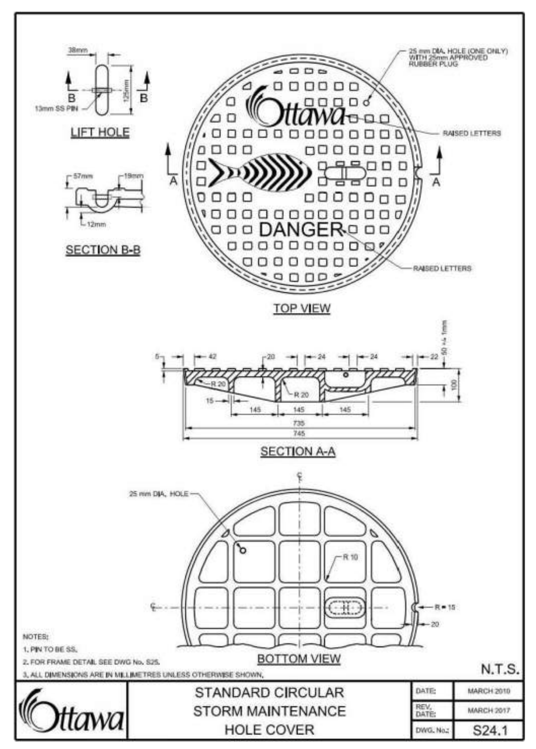

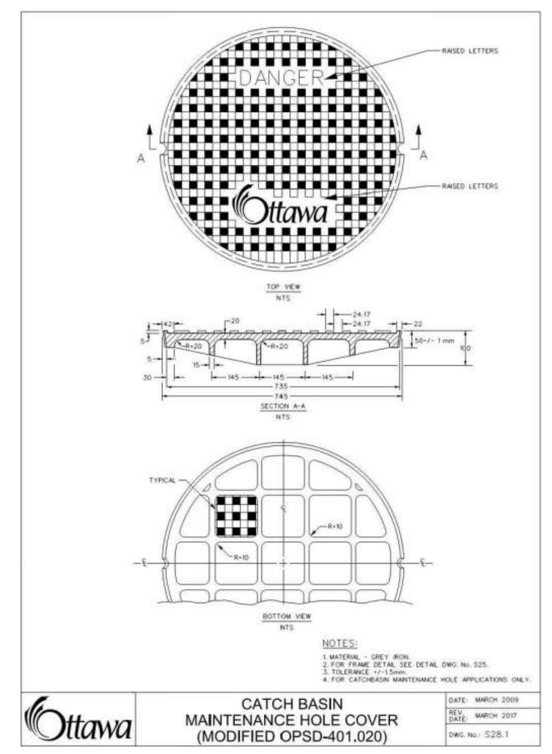

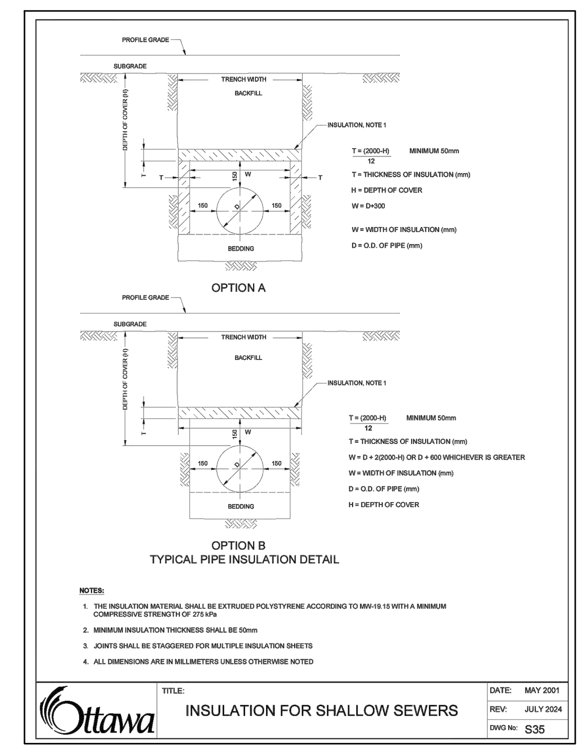

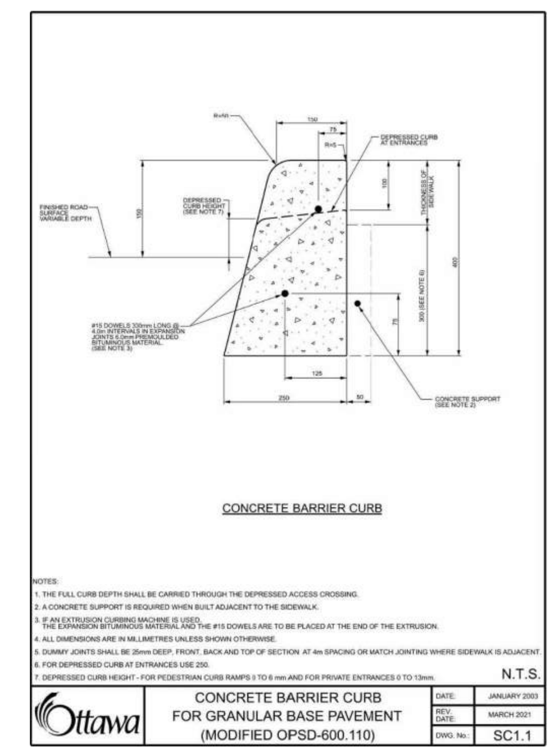

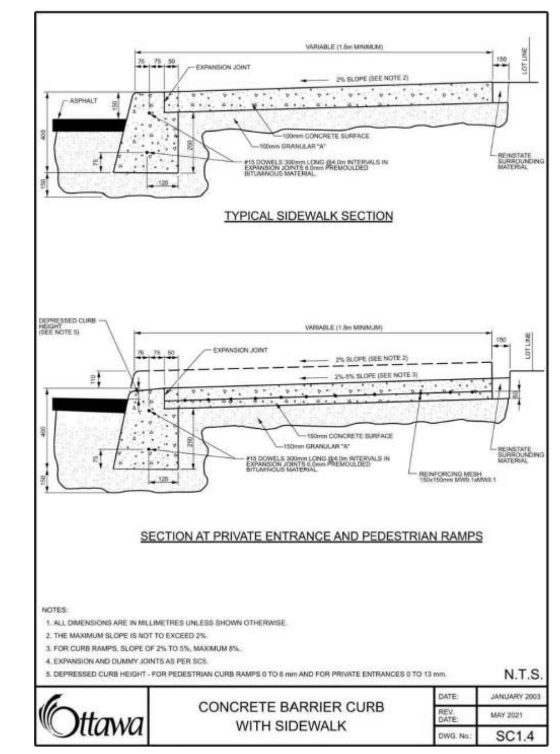

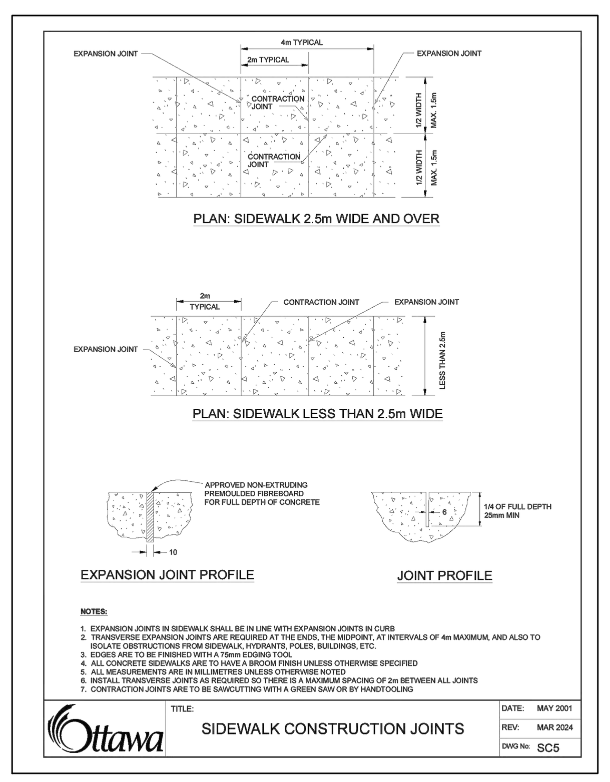

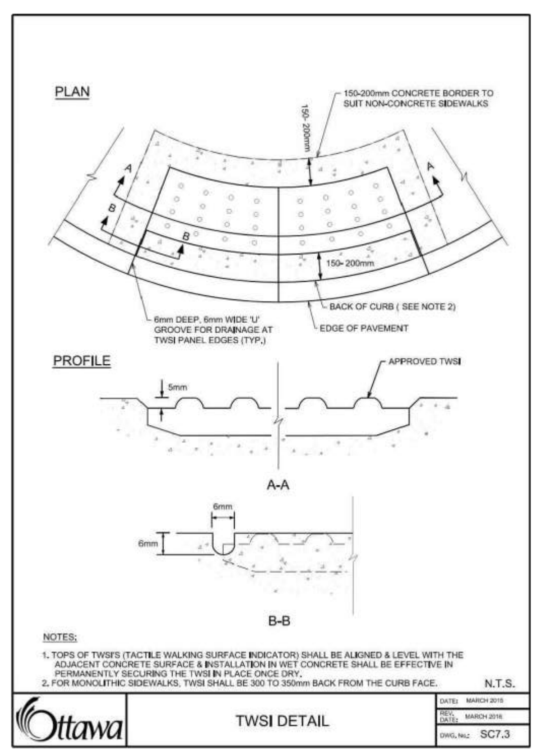

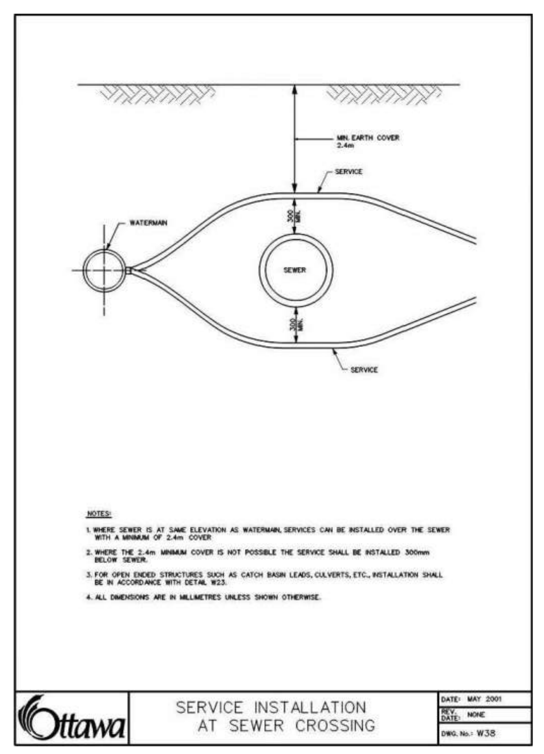

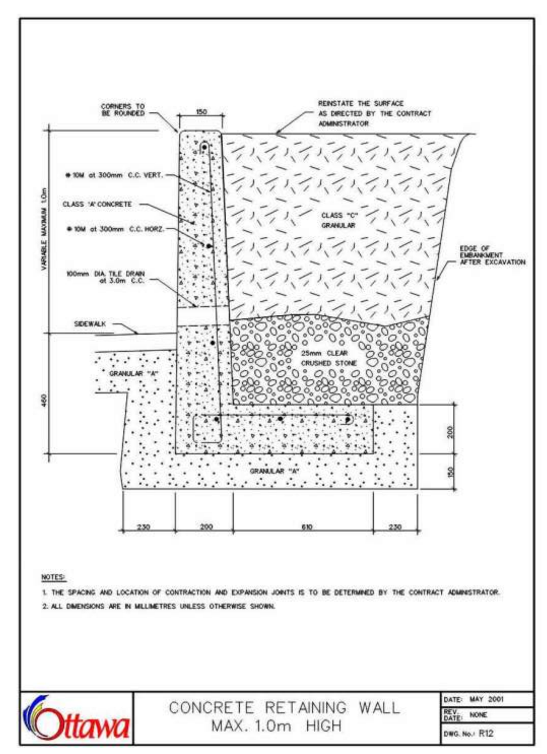

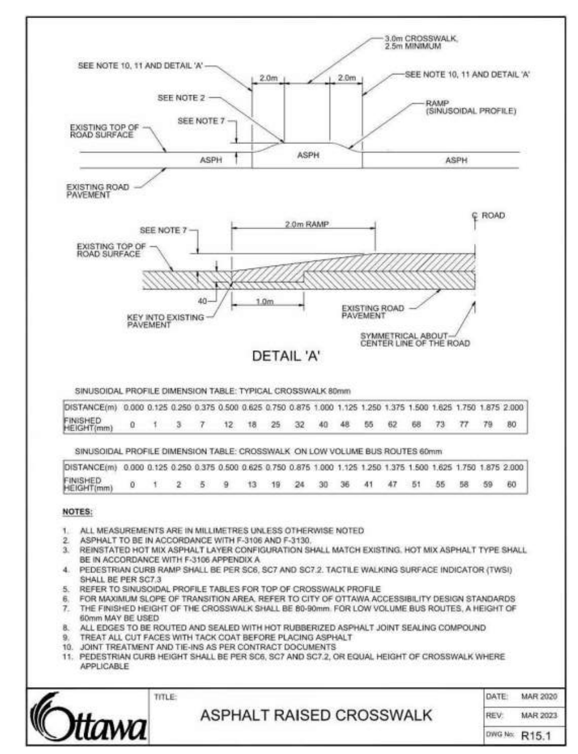

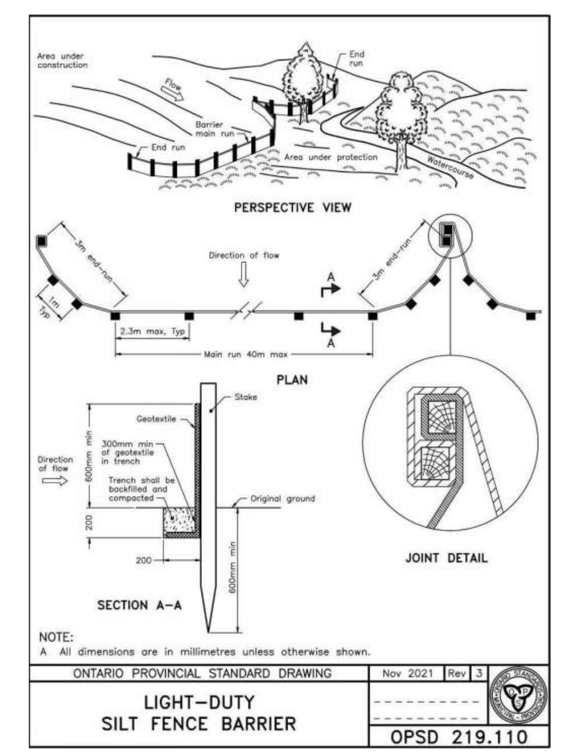

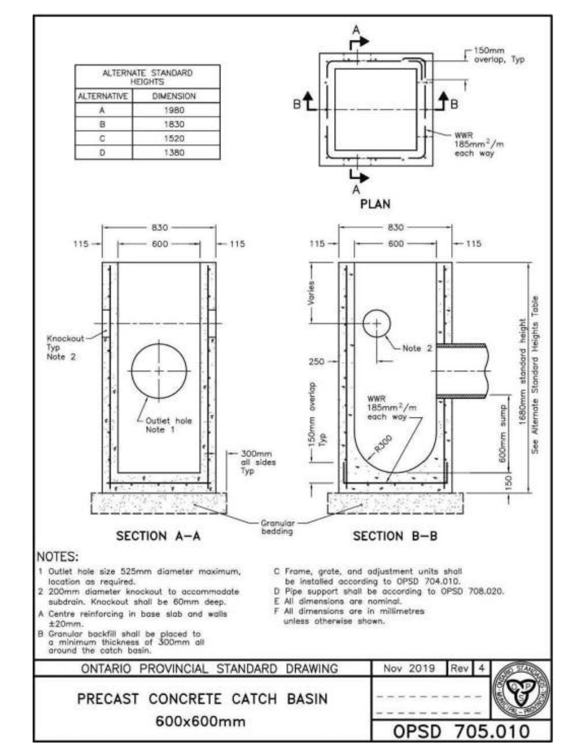

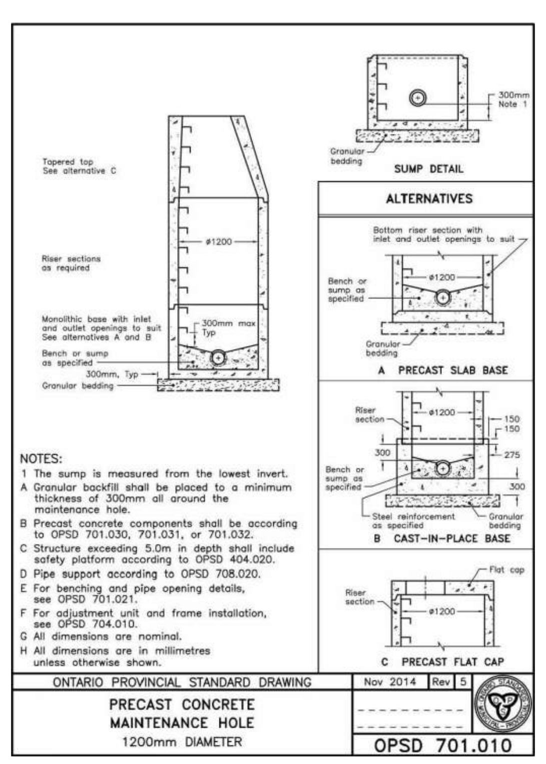

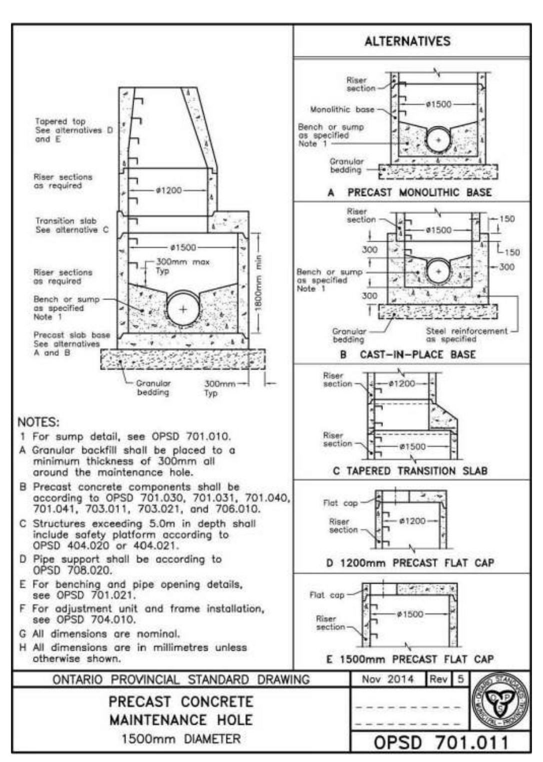

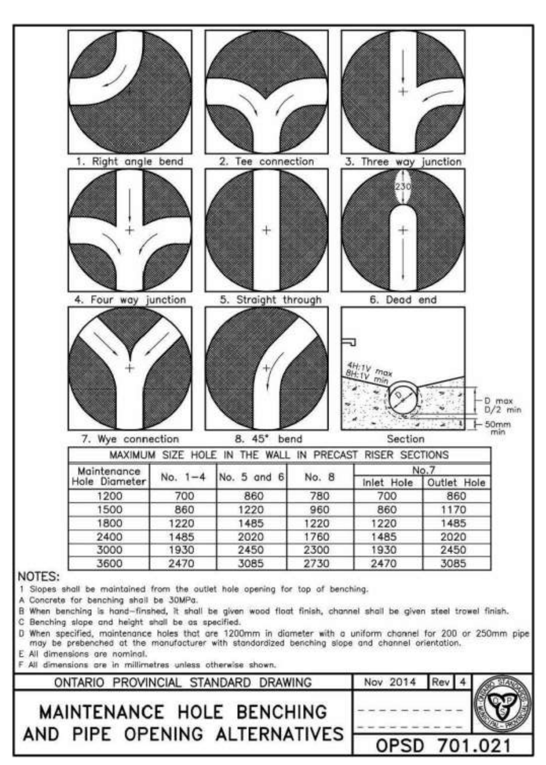

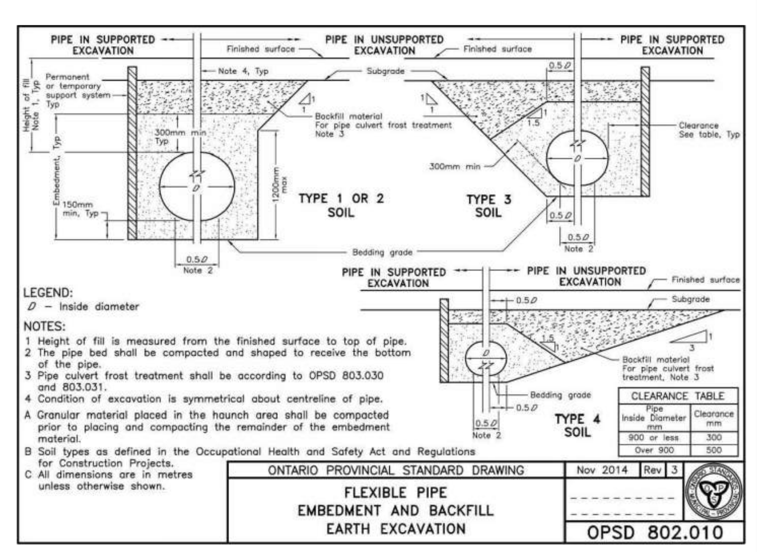

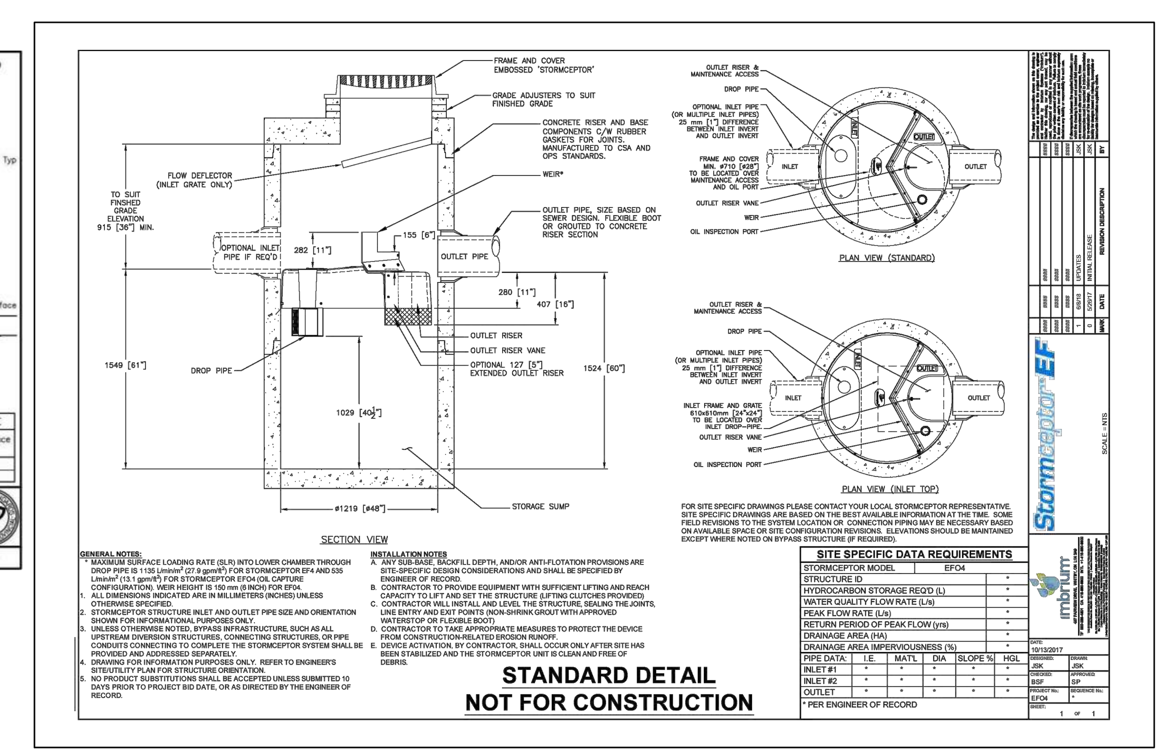

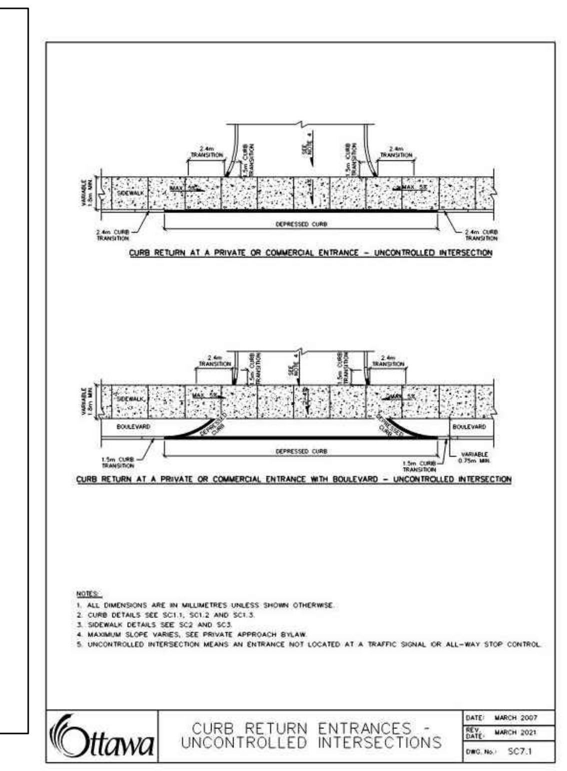

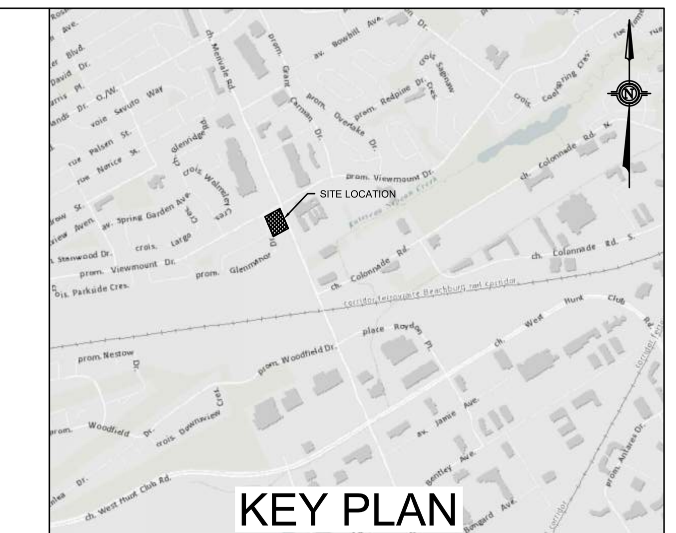

TOPOGRAPHIC INFORMATION & BENCHMARK

TOPOGRAPHIC SURVEY COMPLETED BY VRSB ON MARCH 20th TO 22nd, 2023. ELEVATIONS SHOWN ARE GEODETIC AND ARE REFERRED TO THE CGVD-28 GEODETIC DATUM.

SITE BENCHMARK No.1 LOCATED ON NORTH WEST INTERSECTION OF MERIVALE ROAD. AND VIEWMOUNT DRIVE. FIRE HYDRANT TOP OF NUT ELEVATION = 89.19

LEGAL PLAN

LEGAL SURVEY COMPLETED BY FARLEY, SMITH & DENIS SURVEYING LTD. ON APRIL 21st, 2023. BEARINGS ARE ASTRONOMIC AND ARE REFERRED TO THE WESTERLY LIMIT OF MERIVALE ROAD HAVING A BEARING OF N 22° 18' 30" W AS SHOWN ON REGISTERED PLAN 401392.

No.	DATE	DESCRIPTION	BY
05	2025-12-18	ISSUED FOR SPA - REV04	M.T.
04	2025-09-05	ISSUED FOR SPA - REV03	M.T.
03	2025-04-01	ISSUED FOR SPA - REV02	M.T.
02	2025-02-19	ISSUED FOR SPA - REV01	M.T.
01	2024-03-21	ISSUED FOR SPA	M.T.

REVISIONS

LICENSED PROFESSIONAL ENGINEER
P. CHARLEBOIS
100564967
12/18/2025
PROVINCE OF ONTARIO

5m 0 5 10m
SCALE: 1:250

PARSONS

1223 Michael Street, Suite 100, Ottawa, Ontario, Canada K1J 7T2
Tel: (613) 738-4160 Fax: (613) 739-7105

CLIENT
HARNOIS ÉNERGIES

PROJECT
CONVENIENCE STORE/RESTO
1660 MERIVALE
NEPEAN, ONTARIO

TITLE
DETAIL PAGE

DESIGNED BY: P.C.	PROJECT NO.: 478684
DRAWN BY: P.C.	
CHECKED BY: M.T.	
DATE: MAY 2025	DRAWING NO.: C104
SCALE: N/A	DRAWING: DET

File #: D07-12-25-0019
Plan #: 19270

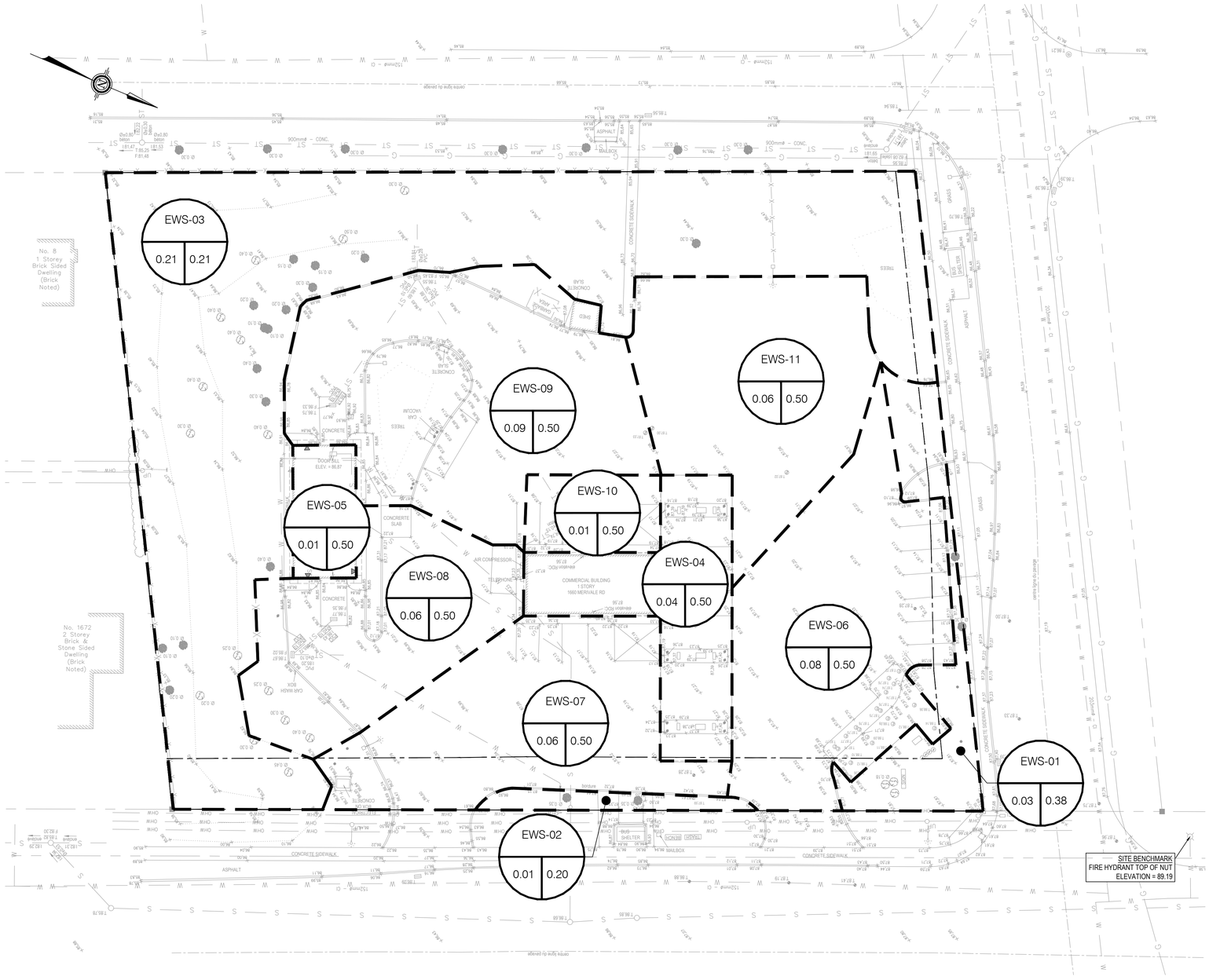

LEGEND:

PROPOSED NEW PROPERTY LINE DUE TO RIGHT-OF-WAY WIDENING

WATERSHED BOUNDARY

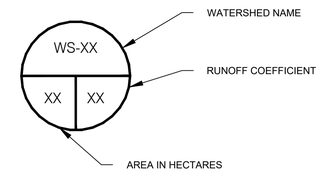

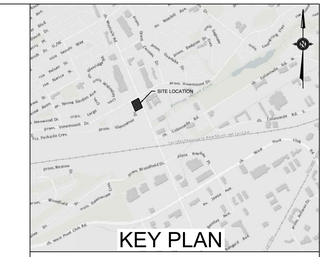

KEY PLAN

TOPOGRAPHIC INFORMATION & BENCHMARK

TOPOGRAPHIC SURVEY COMPLETED BY VRSB ON MARCH 20th TO 22nd, 2023. ELEVATIONS SHOWN ARE GEODETIC AND ARE REFERRED TO THE CGVD-28 GEODETIC DATUM.

SITE BENCHMARK No.1 LOCATED ON NORTH WEST INTERSECTION OF MERIVALE ROAD. AND VIEWMOUNT DRIVE. FIRE HYDRANT TOP OF NUT ELEVATION = 89.19

LEGAL PLAN

LEGAL SURVEY COMPLETED BY FARLEY, SMITH & DENIS SURVEYING LTD. ON APRIL 21st, 2023. BEARINGS ARE ASTRONOMIC AND ARE REFERRED TO THE WESTERLY LIMIT OF MERIVALE ROAD HAVING A BEARING OF N 22° 18' 30" W AS SHOWN ON REGISTERED PLAN 401392.

No.	DATE	DESCRIPTION	BY
05	2025-12-18	ISSUED FOR SPA - REV04	M.T.
04	2025-09-05	ISSUED FOR SPA - REV03	M.T.
03	2025-04-01	ISSUED FOR SPA - REV02	M.T.
02	2025-02-19	ISSUED FOR SPA - REV01	M.T.
01	2024-03-21	ISSUED FOR SPA	M.T.

REVISIONS

LICENSED PROFESSIONAL ENGINEER
P. CHARLEBOIS
100564967
12/18/2025
PROVINCE OF ONTARIO

5m 0 5 10m
SCALE: 1:250

PARSONS
1223 Michael Street, Suite 100, Ottawa, Ontario, Canada K1J 7T2
Tel: (613) 738-4160 Fax: (613) 739-7105

CLIENT
HARNOIS ÉNERGIES

PROJECT
CONVENIENCE STORE/RESTO
1660 MERIVALE
NEPEAN, ONTARIO

TITLE
PRE DEVELOPMENT
DRAINAGE AREAS

DESIGNED BY	P.C.
DRAWN BY	P.C.
CHECKED BY	M.T.
DATE	MAY 2025
SCALE	1:250
PROJECT NO.	478684
DRAWING NO.	C105
DRAWING	PRE

File #: D07-12-25-0019
Plan #: 19270

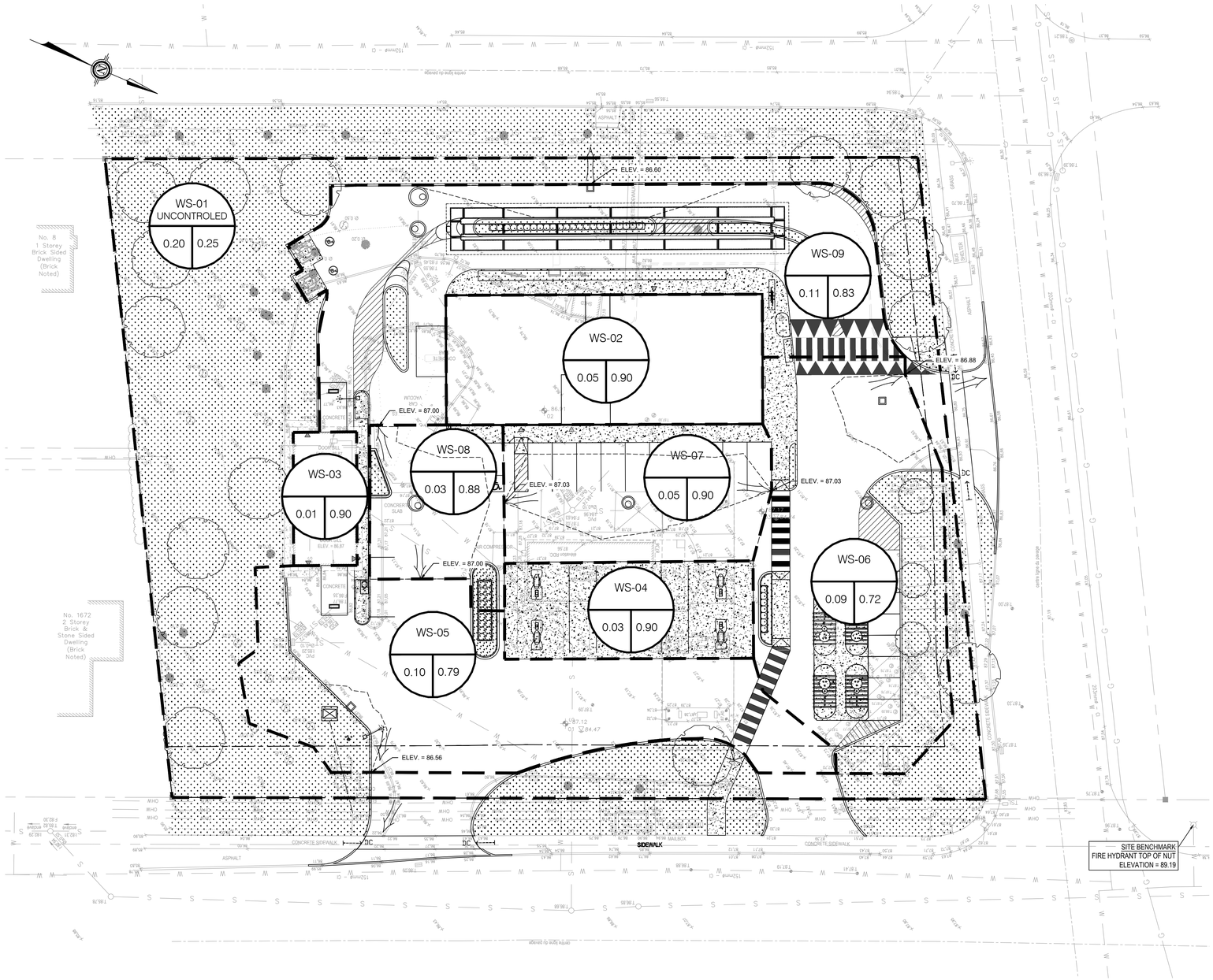

LEGEND:

PROPOSED NEW PROPERTY LINE DUE TO RIGHT-OF-WAY WIDENING

WATERSHED BOUNDARY

WS-XX — WATERSHED NAME

XX — RUNOFF COEFFICIENT

XX — AREA IN HECTARES

MAJOR OVERLAND FLOW ROUTE

MAJOR OVERLAND PONDING AREA

NOTE: ALL STORM EVENTS UP TO 100YEARS ARE STORED IN UNDERGROUND STORAGE. NO SURFACE PONDING OCCURS.

KEY PLAN

TOPOGRAPHIC INFORMATION & BENCHMARK

TOPOGRAPHIC SURVEY COMPLETED BY VRSB ON MARCH 20th TO 22nd, 2023. ELEVATIONS SHOWN ARE GEODETIC AND ARE REFERRED TO THE CGVD-28 GEODETIC DATUM.

SITE BENCHMARK No.1 LOCATED ON NORTH WEST INTERSECTION OF MERIVALE ROAD. AND VIEWMOUNT DRIVE. FIRE HYDRANT TOP OF NUT ELEVATION = 89.19

LEGAL PLAN

LEGAL SURVEY COMPLETED BY FARLEY, SMITH & DENIS SURVEYING LTD. ON APRIL 21st, 2023. BEARINGS ARE ASTRONOMIC AND ARE REFERRED TO THE WESTERLY LIMIT OF MERIVALE ROAD HAVING A BEARING OF N 22° 18' 30" W AS SHOWN ON REGISTERED PLAN 401392.

No.	DATE	DESCRIPTION	BY
05	2025-12-18	ISSUED FOR SPA - REV04	M.T.
04	2025-09-05	ISSUED FOR SPA - REV03	M.T.
03	2025-04-01	ISSUED FOR SPA - REV02	M.T.
02	2025-02-19	ISSUED FOR SPA - REV01	M.T.
01	2024-03-21	ISSUED FOR SPA	M.T.

REVISIONS

LICENSED PROFESSIONAL ENGINEER
P. CHARLEBOIS
100564967
12/18/2025
PROVINCE OF ONTARIO

5m 0 5 10m
SCALE: 1:250

PARSONS
1223 Michael Street, Suite 100, Ottawa, Ontario, Canada K1J 7T2
Tel: (613) 738-4160 Fax: (613) 739-7105

CLIENT
HARNOIS ÉNERGIES

PROJECT
CONVENIENCE STORE/RESTO
1660 MERIVALE
NEPEAN, ONTARIO

TITLE
POST DEVELOPMENT
DRAINAGE AREAS

DESIGNED BY	P.C.
DRAWN BY	P.C.
CHECKED BY	M.T.
DATE	MAY 2025
SCALE	1:250
PROJECT NO.	478684
DRAWING NO.	C106
DRAWING	POST

File #: D07-12-25-0019
Plan #: 19270