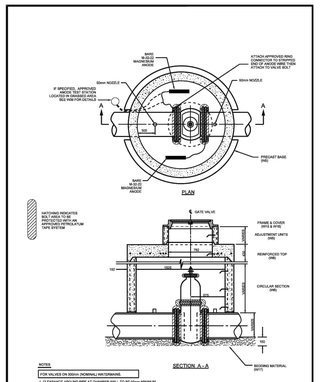

Ottawa | CIRCULAR CHAMBER GATE VALVES | DATE: MAY 2001 | REV. DATE: MARCH 2007 | DWG. No. W8

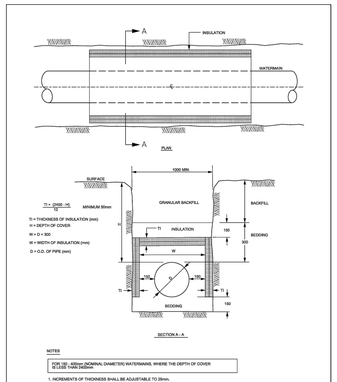

Ottawa | THERMAL INSULATION FOR WATERMAINS IN SHALLOW TRENCHES | DATE: MAY 2001 | REV. DATE: MARCH 2013 | DWG. No.: W22

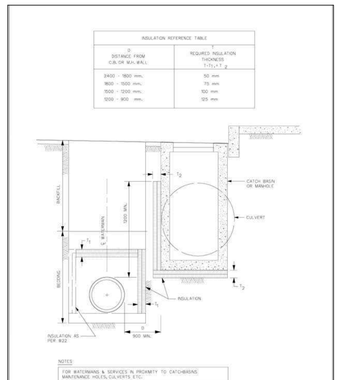

Ottawa | THERMAL INSULATION OF WATERMAINS AT OPEN STRUCTURES | DATE: MAY 2001 | REV. DATE: FEB 2004 | DWG. No.: W23

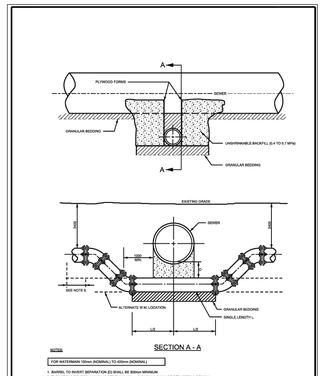

Ottawa | WATERMAIN CROSSING BELOW SEWER | DATE: MAY 2001 | REV. DATE: MARCH 2007 | DWG. No.: W25

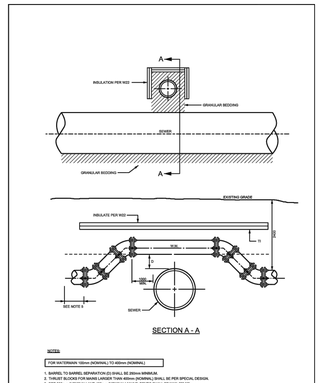

Ottawa | WATERMAIN CROSSING OVER SEWER | DATE: MAY 2001 | REV. DATE: MARCH 2007 | DWG. No.: W26.2

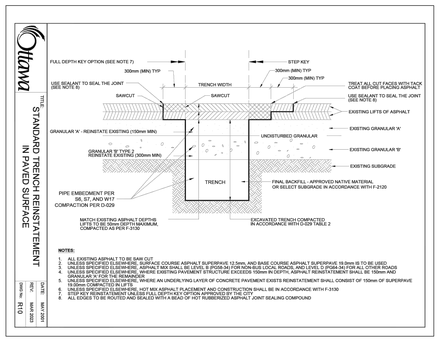

Ottawa | TITLE: STANDARD TRENCH REINSTATEMENT IN PAVED SURFACE | DATE: MAY 2001 | REV. DATE: MARCH 2021 | DWG. No.: R10

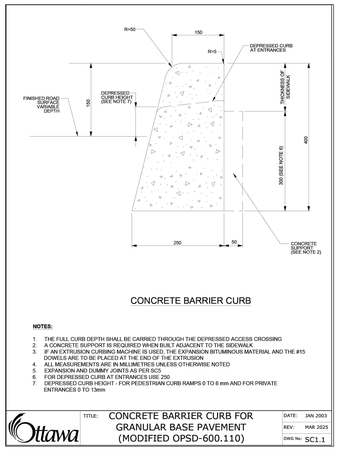

Ottawa | TITLE: CONCRETE BARRIER CURB FOR GRANULAR BASE PAVEMENT (MODIFIED OPSD-600.110) | DATE: JAN 2003 | REV: MAR 2025 | DWG No: SC1.1

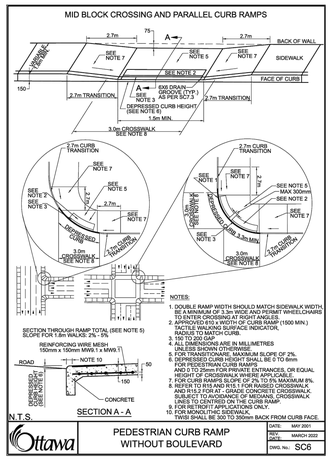

Ottawa | PEDESTRIAN CURB RAMP WITHOUT BOULEVARD | DATE: MAY 2001 | REV. DATE: MARCH 2022 | DWG. No.: SC6

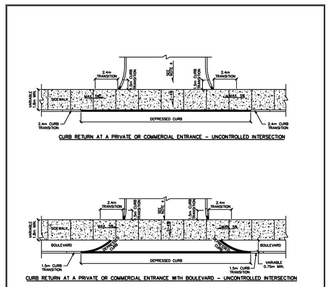

Ottawa | CURB RETURN ENTRANCES - UNCONTROLLED INTERSECTIONS | DATE: MARCH 2007 | REV. DATE: MARCH 2021 | DWG. No.: SC7.1

NOTE:
THE POSITION OF ALL POLE LINES, CONDUITS, WATERMAINS, SEWERS AND OTHER UNDERGROUND AND OVERGROUND UTILITIES AND STRUCTURES IS NOT NECESSARILY SHOWN ON THE CONTRACT DRAWINGS, AND WHERE SHOWN, THE ACCURACY OF THE POSITION OF SUCH UTILITIES AND STRUCTURES IS NOT GUARANTEED. BEFORE STARTING WORK, DETERMINE THE EXACT LOCATION OF ALL SUCH UTILITIES AND STRUCTURES AND ASSUME ALL LIABILITY FOR DAMAGE TO THEM.

No.	REVISION	DATE	BY
6.	REVISED PER CITY COMMENTS	NOV 18/25	ARM
5.	REVISED PER RETAINING WALL ALTERATIONS	OCT 07/25	GJM
4.	ADDITION OF GEOTECHNICAL RECOMMENDATIONS	AUG 19/25	GJM
3.	REVISED PER CITY COMMENTS	AUG 12/25	GJM
2.	REVISED PER COMPLETENESS REVIEW COMMENTS	MAY 09/25	GJM
1.	ISSUED FOR SITE PLAN APPLICATION	MARCH 21/25	GJM

SCALE: AS SHOWN

DESIGN: ARM/AM
CHECKED: ARM
DRAWN: ARM/CJF/AM
CHECKED: ARM
APPROVED: GJM

LICENSED PROFESSIONAL ENGINEER A.R. MESTWARP 100201604 NOV 18/2025 PROVINCE OF ONTARIO

NOVATECH
Engineers, Planners & Landscape Architects
Suite 200, 240 Michael Cowpland Drive
Ottawa, Ontario, Canada K2M 1P6
Telephone (613) 254-9643
Facsimile (613) 254-5867
Website www.novatech-eng.com

LOCATION
1101 SPOOR STREET, CITY OF OTTAWA
COPPERWOOD FLATS - BLOCK 125

DRAWING NAME
NOTES AND DETAILS

PROJECT No. 122144
REV REV#6
DRAWING No. 122144-ND

M:\2022\122144\BLOCK 30?\CAD\Civil\122144-BLK125-ND.dwg, ND2, Nov 18, 2025 - 3:19pm, amestwarp

D07-12-25-0039

PLAN41.DWG - 841mmx594mm

19381