Jp2g Consultants Inc.
ENGINEERS • PLANNERS • PROJECT MANAGERS
1150 Morrison Drive, Suite 410, Ottawa, ON K2H 8S9
T 613-828-7800, F 613-828-2600, www.jp2g.com

1150 Morrison Drive, Suite 410
Ottawa, ON, K2H 8S9
T.613.828.7800 F.613.828.2600
Project No. 21-5089A

Site Servicing and Stormwater Management Report

MIFO New Building

6600 Carrière Street, Ottawa, Ontario

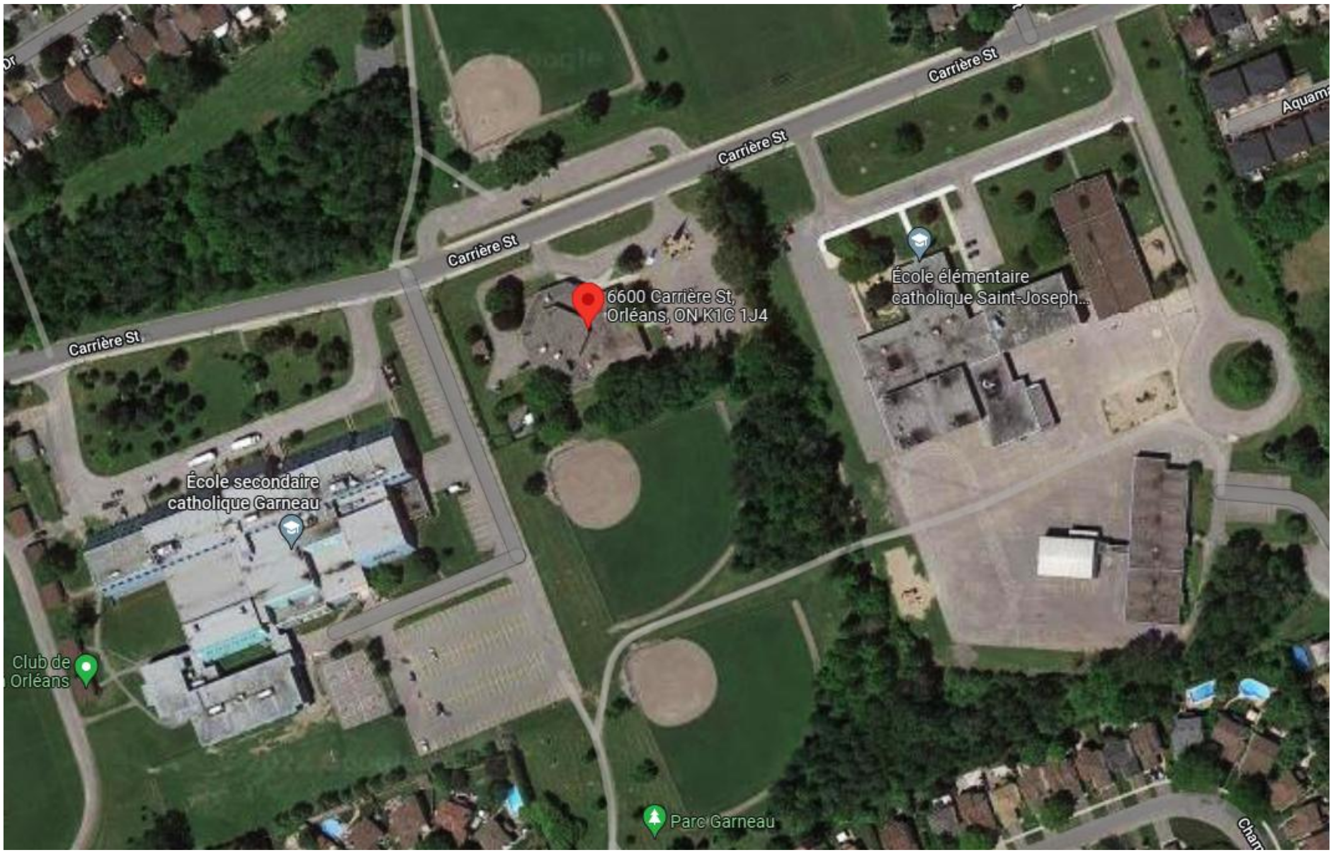
Carrière St
Carrière St
Carrière St
Carrière St
Aquama
6600 Carrière St,
Orléans, ON K1C 1J4
École élémentaire
catholique Saint-Joseph...
École secondaire
catholique Garneau
Club de
Orléans
Parc Garneau

Prepared for

Provencher Roy.
47 Clarence Street, Unit #440
Ottawa, Ontario, K1N 9K1

Revision 3 SUBMISSION May 16, 2025

Table of Contents

1 Introduction 1
  1.1 Design Drawings 1
2 Objective 1
3 Stormwater Management 1
  3.1 Pre-Development Conditions 1
  3.2 Allowable Release Rate 1
  3.3 Post-Development Conditions 2
  3.4 Storm Sewer Pipe Design 2
  3.5 Stormwater Quality Control 2
  3.6 Stormwater Quantity Control 2
4 **Sanitary Servicing** 4
5 Water 4
  5.1 Domestic Water Demand 4
  5.2 Fire Flow Demand 5

❖ **Appendix A** **Drawings and Figures**
❖ **Appendix B** **Stormwater Management Calculations**
❖ **Appendix C** **Sanitary Servicing Calculations**
❖ **Appendix D** **Fire Flow Demand Calculations**
❖ **Appendix E** **Boundary Conditions and Pressure Check**
❖ **Appendix F** **Pre-Consultation Notes**
❖ **Appendix G** **Roof Drain and ICD Product Data Sheets**
❖ **Appendix H** **OGS Data Sheet**

1 Introduction

Jp2g Consultants Inc. was retained by Provencher Roy to complete a Site Servicing and Stormwater Management Report suitable for the City of Ottawa Site Plan Control Application, for a new Office Building development located on the south side of Carrière Street east of Orléans Boulevard in Orléans, ON.

The site is approximately **0.82 ha** in size and is bound by Carrière Street on the north property limit. The proposed development includes the construction of a new **2700 m^2** Theatre Building, and associated parking and landscaped areas.

A Pre-Consultation meeting was held with City of Ottawa staff on May 9, 2022, to determine the project constraints and requirements. Preconsultation meeting minute notes are available in **Appendix F**. The following report details the site servicing & stormwater management calculations used for capacity, water quantity and quality control in accordance with the City of Ottawa's requirements.

1.1 Design Drawings

The following reference civil design drawings are included.

- C1 – Site Servicing Plan
- C2 – Grading Plan
- C3 – General Notes and Details
- C4 – General Notes and Details II
- Figure 1 – Pre-Development Storm Drainage Areas
- Figure 2 – Post-Development Storm Drainage Areas
- Figure 3 – Fire Hydrant Coverage Area

2 Objective

This study will outline the servicing requirements for the development and identify the impact of the development on the existing municipal services, including water, storm and sanitary.

The stormwater management plan is to control post-development peak flows to pre-determined levels, and detain onsite, stormwater up to and including the 100-year storm event with a 20% increase of rainfall intensity (hereby referred to as 100-year* storm event) without affecting adjacent lands, and to provide clean runoff to minimize pollution of the downstream receiving watercourse

3 Stormwater Management

3.1 Pre-Development Conditions

The existing site consists of one commercial parcel that includes a parking lot. The parcels are bounded by two existing schools on each side.

3.2 Allowable Release Rate

Based on existing conditions the site appears to be about 60% hard surface, 40% of the site was assumed to be soft surface. Using this data, a pre-development runoff coefficient of 0.62 was calculated. From the Pre-Consultation meeting, if the calculated pre-development runoff coefficient is greater than 0.5, then a pre-development runoff coefficient of 0.5 is to be used. As a result, the pre-development runoff coefficient of 0.50 an allowable release rate of **$Q_{allowable}$ = 87.3 L/s** was calculated for the new site based on the pre-development 2-year flow, in accordance with the City of Ottawa requirements, see attached **Appendix B**. Please refer to **Appendix B** Table B.1.2 for areas that are controlled/uncontrolled.

3.3 Post-Development Conditions

The proposed site development includes a new office building, asphalt parking, hard surface walkways, landscaped areas and a bioswale. Site storm drainage will be conveyed through the new on-site storm sewer, a bioswale retention system and connect to the existing **1800mm** storm sewer on Carrière Street in the right of way. An existing storm sewer trunk easement runs along the west side of the site which conveys flows from Jeanne d'Arc Boulevard through to Carrière Street. A new storm manhole will be installed on site and the new storm sewer servicing the building will be by gravity sewer. Flows will be managed to limit the 100-year post-development flow rate to the pre-allocated 2-year release rate identified in section 3.2.

Stormwater runoff from the roof, parking areas and partial green spaces will be collected into the on-site manhole's, catch basins and bio swale as applicable.

Storm water quantity storage is anticipated on the building roof, parking lot, and underground and will be managed using inlet control devices. The foundation drains will flow unobstructed through the on-site storm sewer system. Foundation drains and perimeter parking lot subdrains will connect to the proposed storm sewer between STMH01 and OGS01 and the interior parking lot sub drains will connect to the proposed storm sewer at CB-1.

The site development area is approximately **0.82 ha** with a post-development average weighted run-off coefficient of **C = 0.74** and **C = 0.83** for the 5-year and 100-year* storm events, respectively. Refer to calculations in **Appendix B**. Stormwater management techniques are required to reduce peak flows from the area, given that post-development peak flows will exceed the pre-development allowable release rate of **87.3L/s**.

3.4 Storm Sewer Pipe Design

Pipe diameter sizing was based on the **5-year** storm event, in accordance with City requirements. Under 5-year conditions, the storm sewers are not in surcharged conditions (i.e. flow/capacity <100%).

3.5 Stormwater Quality Control

Stormwater quality control will be managed by an oil grit separator unit to 80% TSS Removal. The proposed OGS unit is a Stormceptor Model EFO4. Details relating to the proposed OGS can be found in **Appendix H.**

3.6 Stormwater Quantity Control

Post-development peak flows will be detained on the building roof by installing parabolic weirs, (Watts Drainage Adjustable Flow Control for Roof Drains, or equivalent approved product), and ICD's.

Table 1: Allowable Release Rate Breakdown

ID	Description	Flows	
		5-Year Event	100-Year Event
	Allowable Release Rate (Section 3.2)	**87.3 L/s**	**87.3 L/s**
1.2.1	Uncontrolled overland surface flow	**20.4 L/s**	**40.2 L/s**
1.2.2	Net-allowable release rate	**66.9 L/s**	**47.1 L/s***

* Note: Must be controlled to net-allowable 100-year.

To meet the net-allowable release rate for storm sewers, post-development flows will be controlled on the building's roof, in the new parking lot at the West side of the property, and in the South parking lot. The total resulting peak controlled flow is **47.1 L/s** for both the **5-year and 100-year**. which is equal to the net-allowable release rate.

Table 2: Controlled Flow Breakdown

ID	Description	Controlled Flows	Head (m)	Surface Storage (m^3)			Available Storage (m^3)
				5-Year Requirement	100-Year Requirement	100+20% Requirement	
	Net-allowable controlled release rate (Table 1)	**47.3 L/s**					
1.3.2	Building Roof	**8.8 L/s**	**0.15**	**51**	**119**	**150**	**135**
1.3.3	West Side Parking Lot	**20.0 L/s**	**1.82**	**21**	**60**	**79**	**79**
1.3.4	Rear Parking Lot	**18.3 L/s**	**1.08**	**13**	**37**	**48**	**41**

Refer to **Appendix B** for full calculation.
Note: 9.15 L/s is being used to determine storage requirements for the Rear Parking Lot area to compensate for less than maximum head over the ICD over the course of a storm event.

The building roof storage requirements were calculated to be 119**m^3** for the 100-year storm event and 51**m^3** for the 5-year storm event. Parabolic weirs (Watts Drainage Adjustable Accutrol Weir for Roof Drains, or equivalent approved product to be confirmed by building mechanical) will be installed at each roof drain, limiting the flow of each restrictor to 0.31 L/s. Scuppers will be supplied on the building roof at 150mm above the roof drain elevation. For 28 roof drains, the total release rate from the building roof will be a maximum of 8.8 L/s. Details relating to the roof drains can be found in **Appendix G**.

Flow will be restricted at CB1 using an ICD size 84mm. This ICD was sized to provide the restricted 20 L/s of flow through the orifice, at the maximum design head for the surface storage for the 100 year +20% design storm. The maximum ponding depth in the parking lot is up to 340mm which is in accordance with the City of Ottawa requirements. In the event the capacity of this system is exceeded, emergency runoff will overflow onto Carrière Street from the northwest parking lot entrance.

Additional storage will be required for the rear parking lot. Flow is restricted through the rear parking lot storm sewer using an ICD of 90mm at STMH01. This ICD was sized using the upstream obvert of the oversized 1050mm pipe to ensure that sufficient storage within the pipe is provided for the restricted release rate of 18.3 L.s. The 1050mm storm sewer from CBMH01 to STMH-1 allows for the **41m^3** of storage required for the rear parking lot. There will be no surface ponding in the rear parking lot for all storms up to and including the 100+20% design storm, and the oversized pipe was sized to ensure sufficient storage volume to capture the excess runoff from the 100+20% design storm. Refer to **Appendix B** for storage calculations.

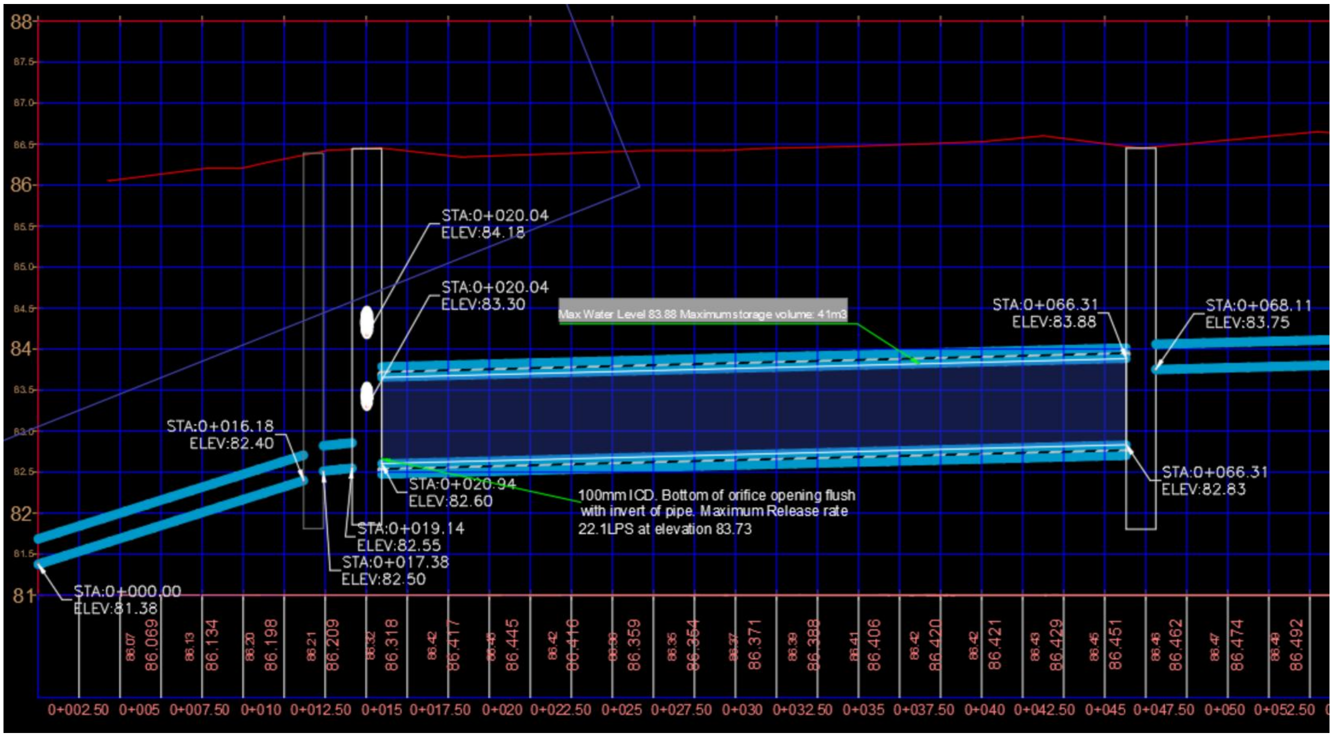
88
86
84
82
81
STA:0+020.04
ELEV:84.18
STA:0+020.04
ELEV:83.30
Max Water Level 83.88 Maximum storage volume: 41m3
STA:0+066.31
ELEV:83.88
STA:0+068.11
ELEV:83.75
STA:0+016.18
ELEV:82.40
STA:0+020.94
ELEV:82.60
100mm ICD. Bottom of orifice opening flush with invert of pipe. Maximum Release rate 22.1LPS at elevation 83.73
STA:0+066.31
ELEV:82.83
STA:0+019.14
ELEV:82.55
STA:0+017.38
ELEV:82.50
STA:0+000.00
ELEV:81.38
86.069
86.134
86.198
86.209
86.318
86.417
86.445
86.416
86.359
86.354
86.371
86.388
86.406
86.420
86.421
86.429
86.451
86.462
86.474
86.492
0+002.50 0+005 0+007.50 0+010 0+012.50 0+015 0+017.50 0+020 0+022.50 0+025 0+027.50 0+030 0+032.50 0+035 0+037.50 0+040 0+042.50 0+045 0+047.50 0+050 0+052.50

Figure 1: Oversized Storage Pipe Details

4 Sanitary Servicing

A new **200mm** sanitary sewer service will connect to the existing **250mm** sanitary sewer located on the north side of Carrière Street in the City right of way. A new sanitary manhole will be installed on site connecting the building sanitary service to the existing sanitary sewer in the right of way. The new sanitary sewer servicing the building will be installed at a **2.00%** slope conveying sanitary flow from the building to the proposed on site **SAMH-01,** and to the to the existing sanitary sewer on Carrière Street. Refer to drawing **C1 – Site Servicing Plan**.

Peak sanitary flow for the site is calculated to be **0.67 l/s**. The new **200mm** sanitary sewers at minimum **2.00%** slope will have a full flow capacity of **46.4 l/s**.

5 Water

A **150mm** ductile iron watermain exists along Carriere Street. A new **150mm** pvc watermain is proposed to be connected to the existing **150mm** watermain on Carriere Street to supply the building with the required demand.

5.1 Domestic Water Demand

The water demand for the new development is calculated based on Table 4.2 of the *City of Ottawa Design Guidelines for Water Distribution*.

Design Criteria:

- Average daily demand = 28,000 l/gross ha/day
- Gross Hectares = 0.82ha
- Maximum Day Factor = 1.5
- Maximum Hour Factor = 1.8

Average Daily Demand: $\frac{28{,}000\ \text{l/gross ha/day} \times 0.82\text{ha}}{24\ \text{hrs/day} \times 3600\ \text{s/hr}} = 0.27\ \text{l/s}$

Maximum Daily Demand: 0.27 l/s x 1.5 = 0.41 l/s

Maximum Hour Demand: 0.41 l/s x 1.8 = 0.74 l/s

A new water service will be located at a minimum of **2.4m** below grade for adequate frost protection. This new water service will be connected to the existing **150mm** municipal watermain located on the south side of Carrière Street in the City right of way. A new valve box will be installed at the property line.

5.2 Fire Flow Demand

There are (2) fire hydrants along the frontage of the property which will provide fire protection to the site. The new building will be equipped with an automatic sprinkler system. Based on the Fire Underwriters Survey Method, the fire flow demand for the new building is calculated to be:

Fire Flow Demand: **116.7 l/s** (Refer to Appendix B – Fire Flow Calculations).

The existing 2 fire hydrants on the frontage of the property are both Class AA fire hydrants, within 75m to the exposed building. The total contribution from these fire hydrants is a maximum of 190 l/s, meeting the site's 116.7 l/s requirement based on Table 1 of *Appendix I Ottawa Design Guidelines – Water Distribution*, to be confirmed by boundary conditions upon receipt.

End of Site Servicing and Stormwater Management Report.

Please contact the undersigned should you require any clarification.

Prepared By:

Zach Bauman, EIT
Civil Engineering Intern
Zach.Bauman@Jp2g.com

Revision By:

Will Voteary, EIT
Civil Engineering Intern
William.Voteary@Jp2g.com

Reviewed By:

REGISTERED PROFESSIONAL ENGINEER
D.NGUYEN
100053149
Dec 09, 2022
PROVINCE OF ONTARIO

David Nguyen, P.Eng., ing.
Senior Civil Engineer
David.Nguyen@Jp2g.com

Appendix A - Drawings and Figures

DEMOLITION NOTES

1. DEMOLISH AND REMOVE EXISTING ASPHALT, GRANULAR BASE, GRANULAR SUB-BASE, CONCRETE CURBS, WALKWAYS. REFER TO ARCHITECTURAL FOR ADDITIONAL DEMOLITION NOTES.
2. DEMOLISH AND REMOVE EXISTING CATCHBASIN/MANHOLES.
3. DEMOLISH AND REMOVE EXISTING STORM AND SANITARY SEWER LINES FROM BUILDING TO PROPERTY LINE AND CAP AT PROPERTY LINE. EXISTING LOCATION OF STORM AND SANITARY SHOWN IS APPROXIMATE AND TO BE FIELD CONFIRMED BEFORE DEMOLITION.
4. DEMOLISH AND REMOVE EXISTING WATERMAIN FROM BUILDING TO PROPERTY LINE. WATER SERVICE TO BE 'BLANKED' AT MUNICIPAL WATERMAIN IN ACCORDANCE WITH CITY OF OTTAWA REQUIREMENTS. REFER TO C1 DRAWING.
5. REFER TO ARCHITECTURAL, MECHANICAL, ELECTRICAL FOR OTHER SITE SERVICES NOT INCLUDED IN CIVIL DEMOLITION DRAWING.
6. REMOVE EXISTING EASTERN ENTRANCE INCLUDING DEPRESSED CURB, CONCRETE SIDEWALK, AND ASPHALT (BOULEVARD AND ENTRANCE).

REMOVALS LEGEND

— — —	PROPERTY LINE
▨	EXISTING BUILDING
☒☒☒	REMOVALS INCLUDE ASPHALT, CONCRETE, CONCRETE CURB
╳ SA ╳	EXISTING SANITARY SEWER REMOVAL
╳ ST ╳	EXISTING STORM SEWER REMOVAL
╳ W ╳	EXISTING WATERMAIN REMOVAL
╳ ╳	EXISTING CATCHBASIN / MANHOLE REMOVAL

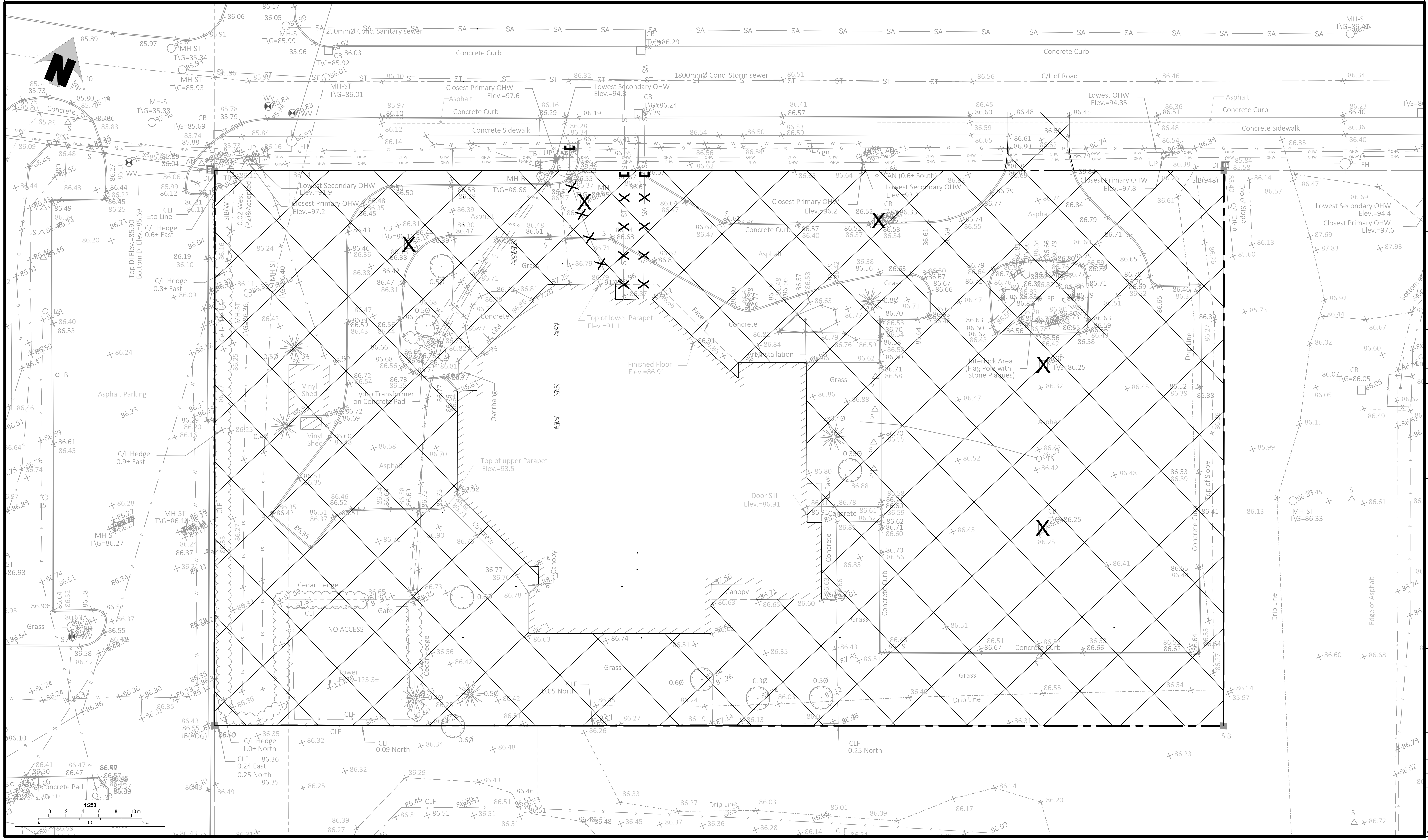
N
250mmØ Conc. Sanitary sewer
1800mmØ Conc. Storm sewer
Concrete Curb
C/L of Road
Concrete Sidewalk
Closest Primary OHW Elev.=97.6
Lowest Secondary OHW Elev.=94.3
Lowest OHW Elev.=94.85
Lowest Secondary OHW Elev.=94.4
Closest Primary OHW Elev.=97.8
Asphalt Parking
Asphalt
Grass
Top of lower Parapet Elev.=91.1
Finished Floor Elev.=86.91
Top of upper Parapet Elev.=93.5
Door Sill Elev.=86.91
Hydro Transformer on Concrete Pad
Vinyl Shed
Cedar Hedge
NO ACCESS
Gate
Canopy
Overhang
Eave
Interlock Area (Flag Pole with Stone Plaques)
FP
Drip Line
Top of Slope
C/L Ditch
Edge of Asphalt
Bottom of Slope
Concrete Pad
C/L Hedge 0.9± East
C/L Hedge 1.0± North
CLF 0.09 North
CLF 0.25 North
CLF 0.24 East 0.25 North
MH-ST
MH-S
CB
SIB
IB(AOG)
SIB(948)
1:250
0 2 4 6 8 10 m
0 1:1 5 cm

THE POSITION OF POLE LINES, CONDUITS, WATERMAINS, SEWERS AND OTHER UNDERGROUND AND OVERGROUND UTILITIES AND STRUCTURES IS NOT NECESSARILY SHOWN ON THE CONTRACT DRAWING, AND, WHERE SHOWN, THE ACCURACY OF THE POSITION OF SUCH UTILITIES AND STRUCTURES IS NOT GUARANTEED. BEFORE STARTING WORK, THE CONTRACTOR SHALL INFORM THEMSELVES OF THE EXACT LOCATION OF ALL SUCH UTILITIES AND STRUCTURES, AND SHALL ASSUME ALL LIABILITY FOR DAMAGE TO THEM.

DESIGN PROFESSIONAL'S SEAL OR SIGNATURE IS EFFECTIVE ONLY AS TO THAT VERSION OF THIS DOCUMENT AS ORIGINALLY PUBLISHED BY DESIGN PROFESSIONAL. DESIGN PROFESSIONAL IS NOT RESPONSIBLE FOR ANY SUBSEQUENT MODIFICATION, CORRUPTION, OR UNAUTHORIZED USE OF SUCH DOCUMENT. TO VERIFY THE VALIDITY OR APPLICABILITY OF THE SEAL OR SIGNATURE, CONTACT DESIGN PROFESSIONAL.

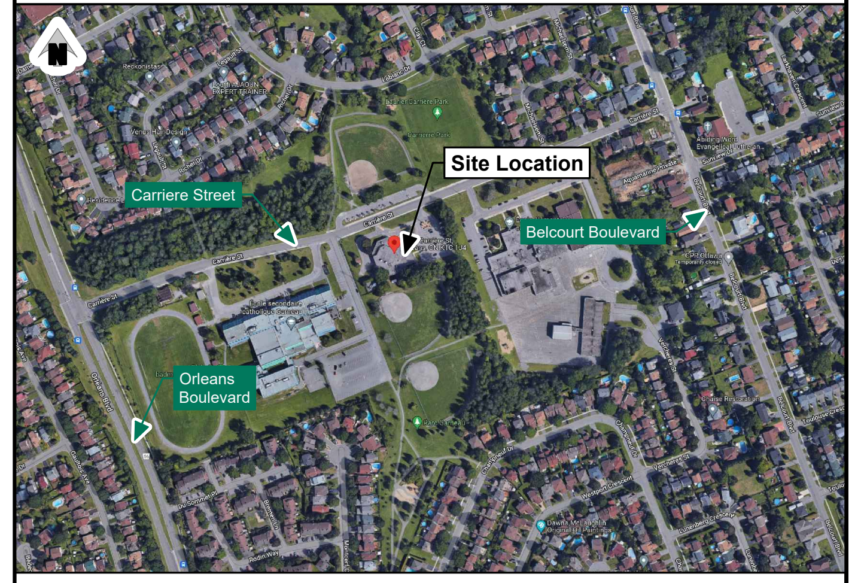
N
Site Location
Carriere Street
Belcourt Boulevard
Orleans Boulevard

No.	YYYY-MM-DD	Eng./Drft.	Revision Comments
2	2025-05-13	DN / WV	SOUMISSION POUR CONTROL DU SITE R3
2	2025-04-10	DN / LA	ISSUED FOR CONSTRUCTION - SI #001
1	2025-02-12	DN / RW	ISSUED FOR ADDENDUM 1

REGISTERED PROFESSIONAL ENGINEER
D.NGUYEN
100053149
MAY 13, 2025
PROVINCE OF ONTARIO

MIFO
6600 CARRIÈRE STREET, OTTAWA, ONTARIO
~
DEMOLITION PLAN

Jp2g Consultants Inc.
ENGINEERS · PLANNERS · PROJECT MANAGERS

12 INTERNATIONAL DRIVE, PEMBROKE, ON
Phone: (613)735-2507, Fax:(613)735-4513

1150 MORRISON DRIVE, SUITE 410, OTTAWA, ON
Phone: (613)828-7800, Fax: (613)828-2600

Designed : **ZB**		Project No. : **21-5089A**
Drafted : **ZB**		Revision Date : **2025-04-10**
Checked : **DN**	Approved : **DN**	Revision No. : **02**
Scale : **1:250**		**21-5089A**

C0

C1 MIFO SITE PLAN V21.DWG

GENERAL NOTES

1. DESIGN AND CONSTRUCTION IS TO BE IN ACCORDANCE WITH MOST RECENT ONTARIO BUILDING CODE.
2. THE CONTRACTOR IS RESPONSIBLE FOR CHECKING AND VERIFYING ALL DIMENSIONS WITH RESPECT TO SITE CONDITIONS AND ALL MATERIALS TO THE PROJECT. ANY DISCREPANCY SHALL BE REPORTED TO THE ENGINEER.
3. THIS DRAWING IS TO BE READ IN CONJUNCTION WITH ALL MATERIAL RELEVANT TO THE PROJECT.
4. ADDITIONAL DRAWINGS MAY BE ISSUED FOR CLARIFICATION TO ASSIST PROPER EXECUTION OF WORK. SUCH DRAWINGS WILL HAVE THE SAME MEANING AND INTENT AS IF THEY WERE INCLUDED WITH THE CONTRACT DOCUMENTS.
5. DO NOT SCALE DRAWINGS.
6. CONTRACTOR MUST COMPLY WITH LOCAL BY-LAWS, CANADIAN CONSTRUCTION SAFETY CODE AND ALL REGULATIONS SET BY AUTHORITIES HAVING JURISDICTION. IN CASE OF CONFLICT OR DISCREPANCY, THE MORE STRINGENT REQUIREMENTS SHALL APPLY.
7. CONTRACTOR RESPONSIBLE FOR OBTAINING ALL REQUIRED UTILITY LOCATES, INSPECTIONS, PERMITS, AND APPROVALS, INCLUDING ALL ASSOCIATED COSTS. LOCATION OF EXISTING UTILITIES ARE APPROXIMATE ONLY AND BASED ON BEST AVAILABLE INFORMATION.
8. EXISTING INFRASTRUCTURE INFORMATION IS IN REFERENCE TO TOPOGRAPHICAL SURVEY COMPLETED BY ANNIS, O'SULLIVAN, VOLLEBEKK LTD. ON JANUARY 6, 2020 AND INFORMATION FROM GEOOTTAWA.

DRAWING NOTES

01 SUPPLY AND INSTALL NEW 3.0m LONG 150mmØ PERFORATED SUB-DRAINS WRAPPED IN GEOTEXTILE SOCK. EXTEND FROM ASSOCIATED STORM SEWER STRUCTURE AT PAVEMENT SUB-GRADE LEVEL AND PROVIDE WATERTIGHT CONNECTION.

1a SUBDRAINS SHOULD BE INSTALLED ON THE SIDES OF THE ACCESS ROAD AND PARKING AREA. SEE GEOTECHNICAL NOTES AND REFER TO GEOTECHNICAL REPORT.

02 CONNECT WATER, STORM AND SANITARY SERVICES TO BUILDING INTERIOR 1.0m FROM BUILDING FOUNDATION. REFER TO MECHANICAL PLANS.

03 BREAK IN AND CONNECT TO EXISTING SANITARY AND PROVIDE WATERTIGHT CONNECTION. APPROXIMATE INVERT ELEVATION OF EXISTING SEWER: 83.43m; TO BE CONFIRMED BY CONTRACTOR PRIOR TO CONSTRUCTION. CONNECTION SHALL BE MADE WITH CORE DRILLING. CONNECTION TO BE CONSTRUCTED AS PER CITY OF OTTAWA DETAIL S11

04 BREAK IN AND CONNECT TO EXISTING STORM SEWER AND PROVIDE WATERTIGHT CONNECTION. APPROXIMATE INVERT ELEVATION OF EXISTING SEWER: 81.38m; TO BE CONFIRMED BY CONTRACTOR. CONNECTION SHALL BE MADE WITH CORE DRILLING.CONNECTION TO BE CONSTRUCTED AS PER CITY OF OTTAWA DETAIL S11

05 EXISTING STORM, SANITARY AND WATER SERVICES CONNECTING TO THE EXISTING BUILDING TO BE CAPPED AT MAIN LINE, TO COORDINATE WITH THE CITY OF OTTAWA AND DRINKING WATER SERVICES.

06 SUPPLY AND INSTALL NEW OIL GRIT SEPARATOR UNIT (OGS01). MINIMUM 80% TSS REMOVAL. STORMCEPTOR EFO4 OR APPROVED EQUAL. CONTRACTOR TO PROVIDE SHOP DRAWINGS FOR APPROVAL

DRAWING NOTES CONT.D

07 CONNECT NEW 150mmØ x 75.0m LENGTH WATER SERVICE TO EXISTING WATERMAIN AND PROVIDE WATERTIGHT CONNECTION. APPROX. TOP OF WATERMAIN ELEVATION: 83.74m; TO BE CONFIRMED BY CONTRACTOR PRIOR TO CONSTRUCTION. CONTRACTOR TO OBTAIN ALL NECESSARY APPROVALS AND PERMITS REQUIRED. CONNECTION TO EXISTING WATERMAIN IS TO BE VIA THE USE OF AN APPROVED PRE-MANUFACTURED TEE.

08 INSTALL NEW DROP STRUCTURE PER OPSD 1003.020.

09 SUPPLY AND INSTALL NEW INLET CONTROL DEVICE FLOW REGULATOR AT CATCHBASIN CB-1 OUTLET. MAXIMUM DISCHARGE 20 L/s AT 1.67m HEAD AND ORIFICE DIAMETER AT 85mm. TOP OF CB-1 COVER TO BE 50mm ABOVE FINISHED GRADE.

10 UNDERGROUND GEOTHERMAL SYSTEM, REFER TO MECHANICAL.

11 CONNECT TRENCH DRAIN TO STORM SEWER.

12 INSTALL HEAVY DUTY PRECAST TRENCH DRAIN COMPLETE WITH COVER, 200mm WIDE AND 2.5m LONG WITH HOT DIPPED GALVANIZED FINISH.

13 SUPPLY AND INSTALL NEW INLET CONTROL DEVICE FLOW REGULATOR AT STORM MANHOLE, STMH-01 INLET. BOTTOM OF ORIFICE TO BE FLUSH WITH OUTLET OF 1050mm PIPE INVERT. MAXIMUM DISCHARGE 18.3 l/s AT 1.08m HEAD AND ORIFICE DIAMETER AT 91mm.

14 INSTALL STORM AND SANITARY SEWER BACKFLOW PREVENTER INSIDE BUILDING PER APPROVED CITY OF OTTAWA PRODUCTS.

15 LIGHT STANDARD DISTRIBUTION, REFER TO ELECTRICAL (TYPICAL).

16 PERFORATED DRAIN TO BE CONNECTED TO STORM NETWORK

17 INSTALL WATERMAIN CROSSING OVER PROPOSED STORM SEWER AS PER CITY OF OTTAWA DETAIL W25.2. ENSURE 0.5m SPACING BETWEEN STORM SEWER AND WATERMAIN. PROVIDE AND INSTALL HI-40 INSULATION AS PER CITY OF OTTAWA DETAIL W22.

Storm Sewer Structure Table

Manhole No.	Structure OPSD	Top of Frame	Pipe Invert Elevation
CBMH-03	1200mm Conc.. Ø	86.55	IN 84.05 OUT 83.99
CBMH-02	1200mm Conc.. Ø	86.48	IN 83.87 OUT 83.86
CBMH-01	1,800mmØ Manhole	86.45	IN 83.75 OUT 82.84
STMH-01	1,800mmØ Manhole	86.45	IN 82.60 IN 84.26 IN 83.30 OUT 82.57
OGS01	1200mm Conc.. Ø	86.39	IN 82.50 OUT 82.44
CB-01	1200mm Conc.. Ø	85.97	OUT 84.52
TD1	PREFAB	85.78	OUT 84.71

Sanitary Sewer Structure Table

Manhole No.	Structure OPSD	Top of Frame	Pipe Invert Elevation
SAMH - 01	1200mmØ Conc. Ø	86.48	IN 84.10 OUT 84.00

LEGEND

— — —	PROPERTY LINE
//////	EXISTING BUILDING
— SA —	EXISTING SANITARY SEWER
— ST —	EXISTING STORM SEWER
— W —	EXISTING WATERMAIN
— SA —	NEW SANITARY SEWER
— ST —	NEW STORM SEWER
— W —	NEW WATERMAIN
▒	NEW LIGHT DUTY ASPHALT
▓	NEW HEAVY DUTY ASPHALT
⁘	NEW CONCRETE SIDEWALK
⁘	NEW GRASS
⊞ EX-CB	EXISTING CATCHBASIN
⊞ EX-CBMH	EXISTING CATCHBASIN MANHOLE
⊞ CB-#	NEW CATCHBASIN
⊞ CBMH-#	NEW CATCHBASIN MANHOLE
○ SAMH-#	NEW SANITARY MANHOLE
○ STMH-#	NEW STORM MANHOLE
⋈ WV	NEW WATER VALVE
+54.83	EXISTING GRADE
+ 54.76	NEW GRADE
◀ 2.1%	NEW SLOPE

THE POSITION OF POLE LINES, CONDUITS, WATERMAINS, SEWERS AND OTHER UNDERGROUND AND OVERGROUND UTILITIES AND STRUCTURES IS NOT NECESSARILY SHOWN ON THE CONTRACT DRAWING, AND, WHERE SHOWN, THE ACCURACY OF THE POSITION OF SUCH UTILITIES AND STRUCTURES IS NOT GUARANTEED. BEFORE STARTING WORK, THE CONTRACTOR SHALL INFORM THEMSELVES OF THE EXACT LOCATION OF ALL SUCH UTILITIES AND STRUCTURES, AND SHALL ASSUME ALL LIABILITY FOR DAMAGE TO THEM.

DESIGN PROFESSIONAL'S SEAL OR SIGNATURE IS EFFECTIVE ONLY AS TO THAT VERSION OF THIS DOCUMENT AS ORIGINALLY PUBLISHED BY DESIGN PROFESSIONAL. DESIGN PROFESSIONAL IS NOT RESPONSIBLE FOR ANY SUBSEQUENT MODIFICATION, CORRUPTION, OR UNAUTHORIZED USE OF SUCH DOCUMENT. TO VERIFY THE VALIDITY OR APPLICABILITY OF THE SEAL OR SIGNATURE, CONTACT DESIGN PROFESSIONAL.

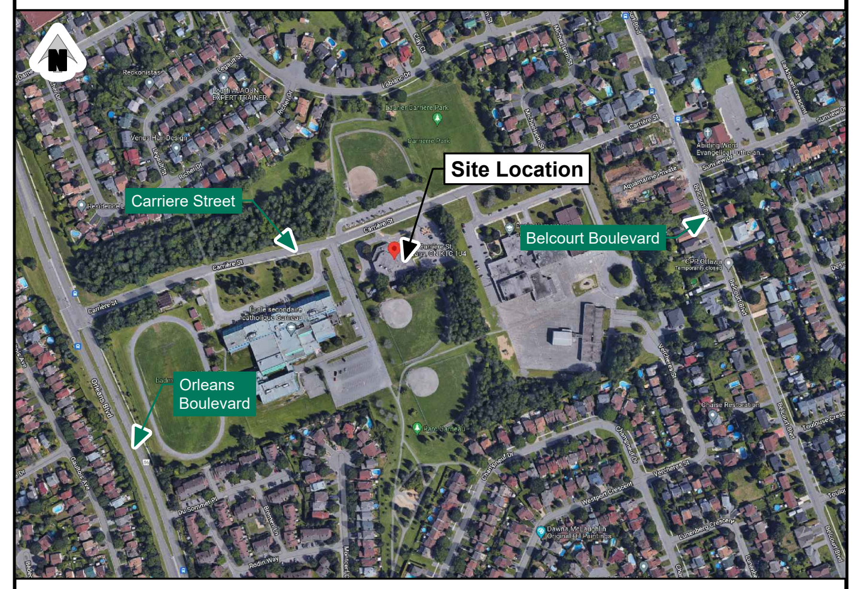

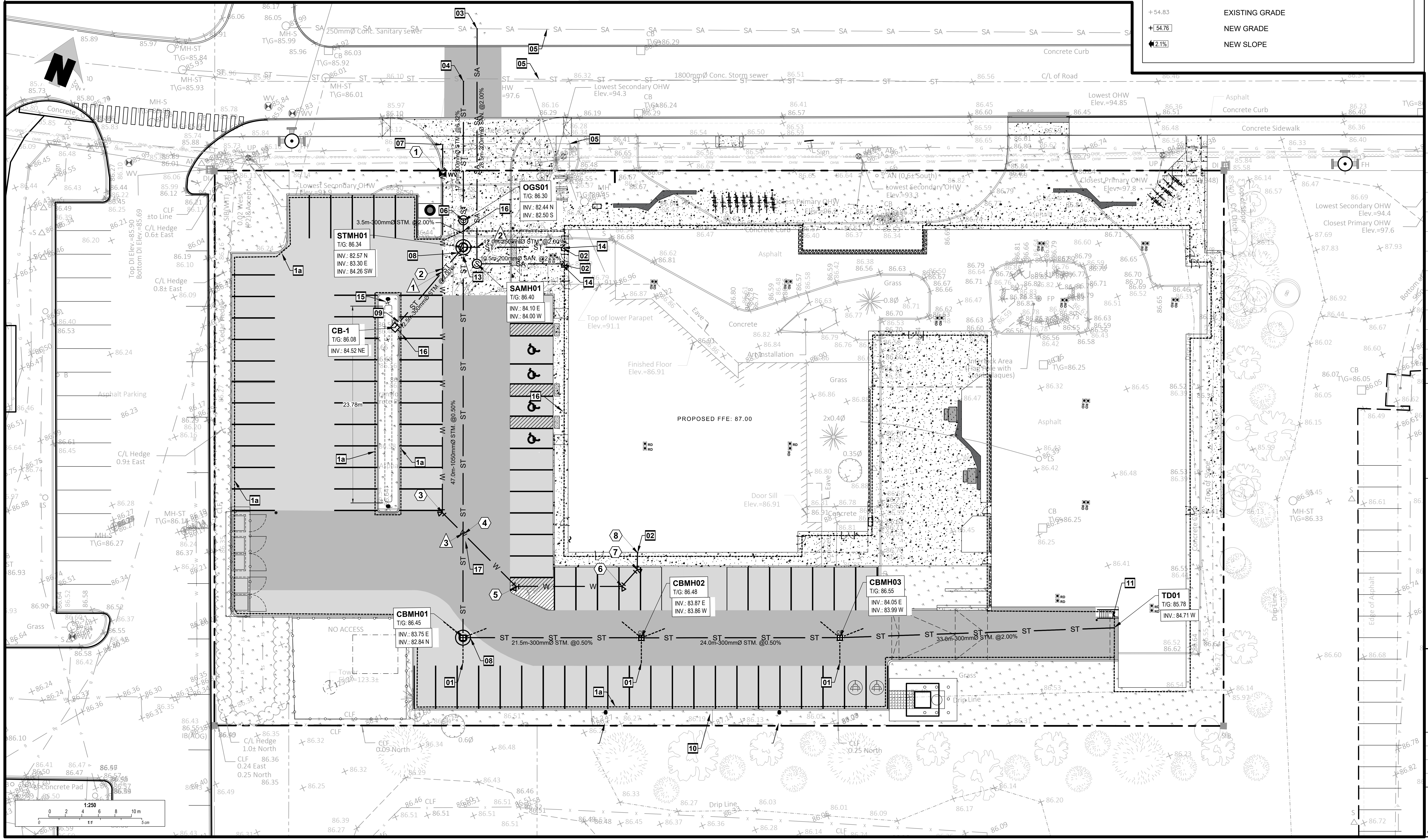

No.	YYYY-MM-DD	Eng./Drft.	Revision Comments
11	2025-05-16	DN / WV	SOUMISSION POUR CONTROL DU SITE R3
10	2025-04-10	DN / LA	ISSUED FOR CONSTRUCTION - SI #001
9	2025-03-25	DN / WV	SOUMISSION POUR CONTROL DU SITE R2
8	2025-01-13	DN / ZB	ISSUED FOR TENDER
7	2024-12-20	DN / ZB	100% SOUMISSION R2
6	2022-12-09	DN / ZB	SOUMISSION POUR CONTROL DU SITE
5	2022-10-28	DN / DS	100% SOUMISSION R1
4	2022-09-30	DN / DS	100% SOUMISSION
3	2022-09-02	DN / DS	99% SOUMISSION
2	2022-06-17	DN / DS	60% SOUMISSION
1	2022-03-04	DN / RW	PRÉLIMINAIRE 30%

REGISTERED PROFESSIONAL ENGINEER
D.NGUYEN
100053149
MAY 16, 2025
PROVINCE OF ONTARIO

MIFO
6600 CARRIÈRE STREET, OTTAWA, ONTARIO
~
SITE SERVICING PLAN

Jp2g Consultants Inc.
ENGINEERS · PLANNERS · PROJECT MANAGERS

12 INTERNATIONAL DRIVE, PEMBROKE, ON
Phone: (613)735-2507, Fax:(613)735-4513

1150 MORRISON DRIVE, SUITE 410, OTTAWA, ON
Phone: (613)828-7800, Fax: (613)828-2600

Designed : **WV**	Project No. : **21-5089A**
Drafted : **WV**	Revision Date : **2025-04-10**
Checked : **DN** / Approved : **DN**	Revision No. : **10**
Scale : **1:250**	**21-5089A**

C1

C1 MIFO SITE PLAN V21.DWG

GENERAL NOTES

1. DESIGN AND CONSTRUCTION IS TO BE IN ACCORDANCE WITH MOST RECENT ONTARIO BUILDING CODE.
2. THE CONTRACTOR IS RESPONSIBLE FOR CHECKING AND VERIFYING ALL DIMENSIONS WITH RESPECT TO SITE CONDITIONS AND ALL MATERIALS TO THE PROJECT. ANY DISCREPANCY SHALL BE REPORTED TO THE ENGINEER.
3. THIS DRAWING IS TO BE READ IN CONJUNCTION WITH ALL MATERIAL RELEVANT TO THE PROJECT.
4. ADDITIONAL DRAWINGS MAY BE ISSUED FOR CLARIFICATION TO ASSIST PROPER EXECUTION OF WORK. SUCH DRAWINGS WILL HAVE THE SAME MEANING AND INTENT AS IF THEY WERE INCLUDED WITH THE CONTRACT DOCUMENTS.
5. DO NOT SCALE DRAWINGS.
6. CONTRACTOR MUST COMPLY WITH LOCAL BY-LAWS, CANADIAN CONSTRUCTION SAFETY CODE AND ALL REGULATIONS SET BY AUTHORITIES HAVING JURISDICTION. IN CASE OF CONFLICT OR DISCREPANCY, THE MORE STRINGENT REQUIREMENTS SHALL APPLY.
7. CONTRACTOR RESPONSIBLE FOR OBTAINING ALL REQUIRED UTILITY LOCATES, INSPECTIONS, PERMITS, AND APPROVALS, INCLUDING ALL ASSOCIATED COSTS. LOCATION OF EXISTING UTILITIES ARE APPROXIMATE ONLY AND BASED ON BEST AVAILABLE INFORMATION.
8. EXISTING INFRASTRUCTURE INFORMATION IS IN REFERENCE TO TOPOGRAPHICAL SURVEY COMPLETED BY ANNIS, O'SULLIVAN, VOLLEBEKK LTD. ON JANUARY 6, 2020 AND INFORMATION FROM GEOOTTAWA.

DRAWING NOTES

01 INSTALL SILT FENCE IN ACCORDANCE WITH OPSD 219.130 AND PROVIDE SNOW FENCE AROUND EXISTING TREES (REFER TO LANDSCAPE PLAN).

02 MATCH EXISTING GRADES AT PROPERTY LINE AND LIMITS OF WORK.

03 PROTECT EXISTING ASPHALT AND CONCRETE WALKWAYS DURING CONSTRUCTION.

04 CONTRACTOR TO PROTECT EXISTING STRUCTURES DURING CONSTRUCTION.

05 TOP OF CB1 TO BE 50mm ABOVE FINISHED GRADE.

06 NEW BIOSWALE DETAIL PER LANDSCAPE.

07 REMOVE PORTION OF EXISTING SIDEWALK. CONSTRUCT DEPRESSED ENTRANCE AS PER CITY OF OTTAWA STANDARD DETAIL SC7.1 AND SC2. MATCH EXISTING SIDEWALK AT LIMITS OF WORK.

08 REINSTATE TRENCH ROAD CUT PER CITY OF OTTAWA STANDARD DETAIL R10. REINSTATEMENT TO BE TO THE SATISFACTION OF THE CITY OF OTTAWA. KEY INTO EXISTING ASPHALT PER DETAIL 5/C3.

09 REINSTATE EXISTING CONCRETE BARRIER CURB AS PER CITY OF OTTAWA STANDARD DETAIL SC1.1, MATCH EXISTING ELEVATION

10 REINSTATE DISTURBED GRASSED AREA. MATCH SURROUNDING GRADE.

11 NEW CURB CUT

GEOTECHNICAL NOTES

1. GEOTECHNICAL ENGINEER LICENSED IN THE PROVINCE OF ONTARIO SHALL INSPECT ALL SUBGRADE SURFACES FOR FOOTING AND PAVEMENT STRUCTURES PRIOR TO CONSTRUCTION.
2. GEOTECHNICAL INVESTIGATION PROPOSED BUILDING EXPANSION, 6600 CARRIÈRE STREET PREPARED BY PATERSON GROUP INC., REPORT: PG3694-1 REV.2, DATED APRIL 29, 2025.

DRAWING NOTES CONT.

12 NEW LIGHT DUTY ASPHALT AS PER DETAIL 1 ON SHEET C3

13 NEW HEAVY DUTY ASPHALT AS PER DETAIL 2 ON SHEET C3

14 REMOVE PORTION OF EXISTING SIDEWALK, CURB, AND ASPHALT BOULEVARD. REPLACE WITH NEW FULL HEIGHT CONCRETE CURB. ASPHALT GUTTER, AND CONCRETE SIDEWALK AS PER CITY OF OTTAWA DETAILS SC1, SC4, AND SC20.

EROSION AND SEDIMENT CONTROL NOTES

1. THE CONTRACTOR SHALL IMPLEMENT BEST MANAGEMENT PRACTICES TO PROVIDE FOR PROTECTION OF THE AREA DRAINAGE SYSTEM AND THE RECEIVING WATER COURSE, DURING CONSTRUCTION ACTIVITIES; THIS INCLUDES LIMITING THE AMOUNT OF EXPOSED SOIL, INSTALLING SILT FENCES AND OTHER EFFECTIVE SEDIMENT TRAPS, AND INSTALLING AND MAINTAINING MUD MATS FOR OUTGOING CONSTRUCTION TRAFFIC DURING CONSTRUCTION ACTIVITIES.
2. PREVENT SOIL LOSS DURING CONSTRUCTION (BY STORM WATER RUNOFF OR WIND EROSION).
3. PREVENT SEDIMENTATION OF STORM SEWERS AND RECEIVING STREAMS.
4. PREVENT AIR POLLUTION FROM DUST AND PARTICULATE MATTER.
5. INSTALL FILTER BAG INSERT IN ALL STORM MANHOLES AND CATCH BASINS IMPACTED DURING CONSTRUCTION, INCLUDING CATCH BASINS IN THE RIGHT OF WAY.
6. SEDIMENT AND EROSION CONTROL MEASURES MAY BE MODIFIED IN THE FIELD AT THE DISCRETION OF THE TOWNSHIP OF NORTH DUNDAS INSPECTOR OR CONSERVATION AUTHORITY.
7. STORM WATER PUMPED INTO CITY SERVICE SHALL FLOW THROUGH A FILTER SOCK.
8. THE CONTRACTOR ACKNOWLEDGES THAT FAILURE TO IMPLEMENT APPROPRIATE EROSION AND SEDIMENTATION CONTROL MEASURES MAY BE SUBJECT TO PENALTIES IMPOSED BY ANY APPLICABLE REGULATORY AGENCY.
9. CONTRACTOR TO PROVIDE SNOW FENCE PROTECTION FOR EXISTING TREES AS PER THE LANDSCAPE DRAWINGS.

LEGEND

— — —	PROPERTY LINE
▨	EXISTING BUILDING
— SA —	EXISTING SANITARY SEWER
— ST —	EXISTING STORM SEWER
— W —	EXISTING WATERMAIN
— SA —	NEW SANITARY SEWER
— ST —	NEW STORM SEWER
— W —	NEW WATERMAIN
▭	NEW LIGHT DUTY ASPHALT (DET1/C3)
■	NEW HEAVY DUTY ASPHALT (DET2/C3)
▨	NEW CONCRETE SIDEWALK
▭	NEW GRASS
⊞ EX–CB	EXISTING CATCHBASIN
⊞ EX–CBMH	EXISTING CATCHBASIN MANHOLE
⊞ CB-#	NEW CATCHBASIN
⊞ CBMH-#	NEW CATCHBASIN MANHOLE
○ SAMH-#	NEW SANITARY MANHOLE
○ STMH-#	NEW STORM MANHOLE
⋈ WV	NEW WATER VALVE
+54.83	EXISTING GRADE
+ 54.76	NEW GRADE
◀ 2.1%	NEW SLOPE
»	OVERLAND FLOW ROUTE

THE POSITION OF POLE LINES, CONDUITS, WATERMAINS, SEWERS AND OTHER UNDERGROUND AND OVERGROUND UTILITIES AND STRUCTURES IS NOT NECESSARILY SHOWN ON THE CONTRACT DRAWING, AND, WHERE SHOWN, THE ACCURACY OF THE POSITION OF SUCH UTILITIES AND STRUCTURES IS NOT GUARANTEED. BEFORE STARTING WORK, THE CONTRACTOR SHALL INFORM THEMSELVES OF THE EXACT LOCATION OF ALL SUCH UTILITIES AND STRUCTURES, AND SHALL ASSUME ALL LIABILITY FOR DAMAGE TO THEM.

DESIGN PROFESSIONAL'S SEAL OR SIGNATURE IS EFFECTIVE ONLY AS TO THAT VERSION OF THIS DOCUMENT AS ORIGINALLY PUBLISHED BY DESIGN PROFESSIONAL.
DESIGN PROFESSIONAL IS NOT RESPONSIBLE FOR ANY SUBSEQUENT MODIFICATION, CORRUPTION, OR UNAUTHORIZED USE OF SUCH DOCUMENT. TO VERIFY THE VALIDITY OR APPLICABILITY OF THE SEAL OR SIGNATURE, CONTACT DESIGN PROFESSIONAL.

Site Location
Carriere Street
Belcourt Boulevard
Orleans Boulevard

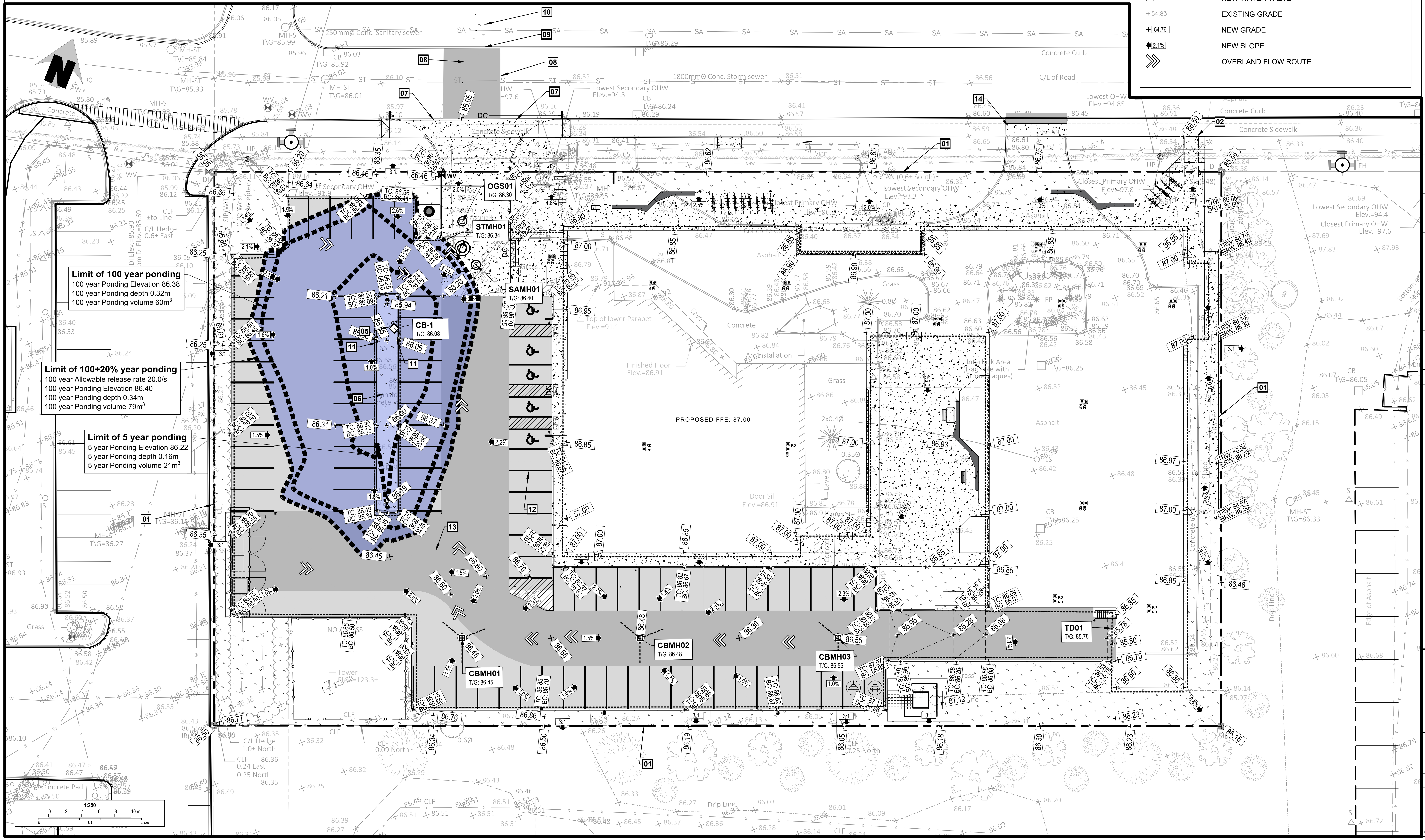
N
250mmØ Conc. Sanitary sewer
1800mmØ Conc. Storm sewer
Concrete Curb
C/L of Road
Concrete Sidewalk
Lowest Secondary OHW Elev.=94.3
Lowest OHW Elev.=94.85
Closest Primary OHW Elev.=97.8
Lowest Secondary OHW Elev.=94.4
Closest Primary OHW Elev.=97.6
Limit of 100 year ponding
100 year Ponding Elevation 86.38
100 year Ponding depth 0.32m
100 year Ponding volume 60m³
Limit of 100+20% year ponding
100 year Allowable release rate 20.0/s
100 year Ponding Elevation 86.40
100 year Ponding depth 0.34m
100 year Ponding volume 79m³
Limit of 5 year ponding
5 year Ponding Elevation 86.22
5 year Ponding depth 0.16m
5 year Ponding volume 21m³
OGS01 T/G: 86.30
STMH01 T/G: 86.34
SAMH01 T/G: 86.40
CB-1 T/G: 86.08
CBMH01 T/G: 86.45
CBMH02 T/G: 86.48
CBMH03 T/G: 86.55
TD01 T/G: 85.78
PROPOSED FFE: 87.00
Finished Floor Elev.=86.91
Top of lower Parapet Elev.=91.1
Door Sill Elev.=86.91
Asphalt
Grass
Concrete
1:250
0 2 4 6 8 10 m
0 1:1 5 cm

No.	YYYY-MM-DD	Eng./Drft.	Revision Comments
11	2025-05-16	DN / WV	SOUMISSION POUR CONTROL DU SITE R3
10	2025-04-10	DN / LA	ISSUED FOR CONSTRUCTION - SI #001
9	2025-03-25	DN / WV	SOUMISSION POUR CONTROL DU SITE R2
8	2025-01-13	DN / ZB	ISSUED FOR TENDER
7	2024-12-20	DN / ZB	100% SOUMISSION R2
6	2022-12-09	DN / ZB	SOUMISSION POUR CONTROL DU SITE
5	2022-10-28	DN / DS	100% SOUMISSION R1
4	2022-09-30	DN / DS	100% SOUMISSION
3	2022-09-02	DN / DS	99% SOUMISSION
2	2022-06-17	DN / DS	60% SOUMISSION
1	2022-03-04	DN / RW	PRÉLIMINAIRE 30%

D.NGUYEN
100053149
MAY 16, 2025

MIFO

6600 CARRIÈRE STREET,
OTTAWA, ONTARIO
~
SITE GRADING AND DRAINAGE, EROSION AND SEDIMENT CONTROL PLAN

Jp2g Consultants Inc.
ENGINEERS · PLANNERS · PROJECT MANAGERS

12 INTERNATIONAL DRIVE, PEMBROKE, ON
Phone: (613)735-2507, Fax:(613)735-4513

1150 MORRISON DRIVE, SUITE 410, OTTAWA, ON
Phone: (613)828-7800, Fax: (613)828-2600

Designed : **WV**	Project No. : **21-5089A**
Drafted : **WV**	Revision Date : **2025-04-10**
Checked : **DN** Approved : **DN**	Revision No. : **10**
Scale : **1:250**	**21-5089A**

C2

C1 MIFO SITE PLAN V21.DWG

General Notes

'5$:,1*6 72 %(5($' ,1 &21-81&7,21 :,7+ $5&+,7(&785$/ $1' /$1'6&$3('5$:,1*6

$// 6(59,&(6 0$7(5,$/6 &216758&7,21 0(7+2'6 $1' ,167$//$7,216 6+$// %(,1 $&&25'$1&(:,7+ 7+(/$7(67 67$1'$5'6 $1' 5(*8/$7,216 2) 7+(&,7< 2) 277$:$ 67$1'$5' 63(&,),&$7,216 $1' '5$:,1*6 217$5,2 3529,1&,$/ 63(&,),&$7,21 67$1'$5' 63(&,),&$7,21 2366 $1' 217$5,2 3529,1&,$/ 67$1'$5' '5$:,1*6 236' 81/(66 27+(5:,6(63(&,),(' 72 7+(6$7,6)$&7,21 2) 7+(&,7< $1' 7+(&2168/7$17

7+(326,7,21 2) (;,67,1* 32/(/,1(6 &21'8,76 :$7(50$,16 6(:(56 $1' 27+(5 81'(5*5281' $1' 29(5*5281' 87,/,7,(6 6758&785(6 $1' $33857(1$1&(6 ,6 127 1(&(66$5,/< 6+2:1 21 7+(&2175$&7 '5$:,1* $1' :+(5(6+2:1 7+($&&85$&< 2) 7+(326,7,21 2) 68&+ 87,/,7,(6 $1' 6758&785(6 ,6 127 *8$5$17((' 35,25 72 &216758&7,21 7+(&2175$&725 6+$// 6$7,6)< +,06(/) 2) 7+((;$&7 /2&$7,21 2) $// 68&+ 87,/,7,(6 $1' 6758&785(6 $1' 6+$// $6680($// /,$%,/,7<)25 '0*(72 7+(0 '85,1* 7+(&2856(2) &216758&7,21 $1< 5(/2&$7,21 2) (;,67,1* 87,/,7,(6 5(48,5(' %< 7+('(9(/230(17 2) 68%-(&7 /$1'6 ,6 72 %(81'(57$.(1 $7 &2175$&725 6 (;3(16(

7+(&2175$&725 0867 127,)< $// (;,67,1* 87,/,7< &203$1<2)),&,$/6),9(˘ %86,1(66 '$<6 35,25 72 67$57 2) &216758&7,21 $1' +$9($// (;,67,1* 87,/,7,(6 $1' 6(59,&(6 /2&$7(' ,1 7+( ),(/' 25 (;326(' 35,25 72 7+(67$57 2) &216758&7,21 ,1&/8',1* %87 127 /,0,7(' 72 32:(5 &20081,&$7,21 $1' *$6 /,1(6

˘ $// 75(1&+,1* $1' (;&$9$7,216 72 %(,1 $&&25'$1&(:,7+ 7+(/$7(67 5(9,6,216 2) 7+(2&&83$7,21$/ +($/7+ $1' 6$)(7< $&7 $1' 5(*8/$7,216)25 &216758&7,21 352-(&76 $1' $6 3(5 7+(5(&200(1'$7,216 ,1&/8'(' ,1 7+(*(27(&+1,&$/ 5(3257

˘ 5()(5 72 $5&+,7(&76 3/$16)25 %8,/',1* ',0(16,216 /$<287 $1' 5(029$/6 5()(5 72 /$1'6&$3(3/$1)25 /$1'6&$3('(7$,/6 $1' 27+(5 5(/(9$17 ,1)250$7,21 $// ,1)250$7,21 6+$// %(&21),50(' 35,25 72 &200(1&(0(17 2) &216758&7,21

ˆ 7232*5$3+,& 6859(< &203/(7(' $1' 3529,'(' %< $11,6 2 68//,9$1 92//(%(.. /7' '$7(' 21 -8/< &2175$&725 72 9(5,)< ,1 7+( ),(/' 35,25 72 &216758&7,21 2) $1< :25. $1' 127,)< 7+((1*,1((5 2) $1< ',6&5(3$1&,(6

˙ $// (/(9$7,216 $5(*(2'(7,& $1' 87,/,=(0(75,& 81,76 9(5,)< 7+$7 -2% %(1&+0$5.6 +$9(127 %((1 $/7(5(' 25 ',6785%('

˝ $// *5281' 685)$&(6 6+$// %((9(1/< *5$'(' :,7+287 321',1* $5($6 $1' :,7+287 /2: 32,176 (;&(37 :+(5($33529(' 6:$/(25 &$7&+ %$6,1 287/(76 $5(3529,'('

$// ('*(6 2) ',6785%(' 3$9(0(17 6+$// %(6$: &87 72)250 $ 1($7 $1' 675$,*+7 /,1(35,25 72 3/$&,1* 1(: 3$9(0(17 5(,167$7(0(17 6+$// %(:,7+ 67(3 -2,176 2) ˘ PP :,'7+ 0,1,080

$// ',6785%(' $5($6 2876,'(352326(' *5$',1* /,0,76 72 %(5(6725(' 72 25,*,1$/ (/(9$7,216 $1' &21',7,216 81/(66 27+(5:,6(63(&,),(' $// 5(6725$7,21 6+$// %(&203/(7(' :,7+ 7+(*(27(&+1,&$/ 5(48,5(0(176)25 %$&.),// $1' &203$&7,21

$%877,1* 3523(57< *5$'(6 72 %(0$7&+(' 81/(66 27+(5:,6(6+2:1

&2175$&725 6+$// 2%7$,1 $1' 3$<)25 $// 1(&(66$5< 3(50,76 $1' 33529/6)520 7+(081,&,3$/ $87+25,7,(6 35,25 72 &200(1&,1* &216758&7,21 ,1&/8',1* :$7(5 3(50,7 $1' 52$' &87 3(50,7

0,1,0,=(',6785%$1&(72 (;,67,1* 9(*(7$7,21 '85,1* 7+((;(&87,21 2) $// :25.6

˘ 5(029( )520 6,7($// (;&(66 (;&$9$7(' 0$7(5,$/ 81/(66 27+(5:,6(',5(&7(')520 7+((1*,1((5 (;&$9$7($1' 5(029($// 25*$1,& 0$7(5,$/ $1' '(%5,6 /2&$7(' :,7+,1 7+(352326(' %8,/',1* 3$5.,1* $1' 52$':$< /2&$7,216

˘ $7 352326(' 87,/,7< &211(&7,21 32,176 $1' &5266,1*6 , (67250 6(:(5 6$1,7$5< 6(:(5 :$7(5 (7& 7+(&2175$&725 6+$// '(7(50,1(7+(35(&,6(/2&$7,21 $1' '(37+ 2) (;,67,1* 87,/,7,(6 $1' 5(3257 $1< ',6&5(3$1&,(6 25 &21)/,&76 72 7+((1*,1((5 %()25(&200(1&,1* :25.

ˆ &2175$&725 72 2%7$,1 3267 &216758&7,21 7232*5$3+,& 6859(< &203/(7(' %< 2/6 25 3 (1* &21),50,1* &203/,$1&(:,7+ '(6,*1 *5$',1* $1' 6(59,&,1* 6859(< ,6 72 ,1&/8'(,19(576)25 %85,(' 87,/,7,(6

˙ $%,'(%< 5(&200(1'$7,216 2) *(27(&+1,&$/ 5(3257 5(3257 $1< 9$5,$7,216 ,1 2%6(59(' &21$7,216)520 7+26(,1&/8'(' ,1 5(3257

˝ 3529,'(&&79 ,163(&7,21 5(3257)25 $// 6(:(56 $1' &$7&+%$6,1 /($'6 PP ',$0(7(5 $1' /$5*(5 5(3(56 $1' &$7&+ ,163(&7,21)2//2:,1* 5(&7,),&$7,21 2) $1< '(),&,(1&,(6

Notes: Sanitary Sewer and Manholes

$// 6$1,7$5< 6(:(5 6$1,7$5< 6(:(5 $33857(1$1&(6 $1' &216758&7,21 0(7+2'6 6+$// &21)250 72 7+(&855(17 &,7< 2) 277$:$ 67$1'$5'6 $1' 63(&,),&$7,216 3529,'(&&79 ,163(&7,21 5(32576)25 $// 1(: 6$1,7$5< 3,3,1* 3529,'(< 7(67,1*)25 1(: 6(59,&(6

6$1,7$5< 6(:(5 3,3(6,=(˘ PP ',$0(7(5 $1' *5$'(5 72 %(39& 6'5 ˘ 81/(66 63(&,),(' 27+(5:,6(:,7+ 58%%(5 *$6.(7 7<3(-2,176 ,1 &21)250$1&(:,7+ &6$ %

6(:(5 %('',1* $6 3(5 &,7< 2) 277$:$ '(7$,/ 6˘

$// 6$1,7$5< 0$1+2/(6 PP ,1 ',$0(7(5 72 %($6 3(5 236' ˆ)5$0($1' &29(5 72 %($6 3(5 &,7< 2) 277$:$ 67$1'$5' 6 ˘ $1' 6

˘ 0$,17(1$1&(+2/(%(1&+,1* $1' 3,3(23(1,1* $/7(51$7,9($6 3(5 7+(236' ˆ

˘ $1< 6$1,7$5< 6(:(5 :,7+ /(66 7+$1 P &29(5 5(48,5(6 7+(50$/ ,168/$7,21 $6 3(5 &,7< 2) 277$:$ 67$1'$5' : 25 $33529(' %< 7+((1*,1((5

Parking Lot and Work in Public Rights of Way

**** CONTRACTOR IS RESPONSIBLE FOR ALL INSTALLATION, MONITORING, REPAIR AND REMOVAL OF ALL EROSION AND SEDIMENT CONTROL FEATURES.****

35,25 72 67$57 2) &216758&7,21˛

,167$// 6,/7)(1&(,1 /2&$7,21 6+2:1

,167$//),/7(5)$%5,& 25 6,/7 6$&.),/7(56 ,1 $// 7+(&$7&+%$6,16 $1' 0$1+2/(6 72 5(0$,1 '85,1* &216758&7,21 :,7+,1 7+(6,7(6((7<3,&$/ '(7$,/

,163(&7 0($685(6 ,00(',$7(/< $)7(5 ,167$//$7,21

'85,1* &216758&7,21˛

0,1,0,=(7+((;7(17 2) ',6785%(' $5($6 $1' 7+('85$7,21 2) (;32685($1' ,03$&76 72 (;,67,1* *5$',1*

3(5,0(7(5 9(*(7$7,21 72 5(0$,1 ,1 3/$&(817,/ 3(50$1(17 67250 :$7(5 0$1$*(0(17 ,6 ,1 3/$&($1' 27+(5:,6(,00(',$7(/< 67$%,/,=(',6785%(' $5($6 :,7+ ,1 7+((;3(16(,7(0 72 %(,'(17,),(' :,7+ ,1 7+(3(5,0(7(5 9(*(7$7,21

3527(&7 ',6785%(' $5($6)520 29(5/$1')/2: %< 5(752),77,1* 6:$/(6 72 7+(6$7,6)$&7,21 2) 7+(3529,'(1* 7(0325$5< 6:$/(72 (;,67,1* 87,/,7<)257+((1*,1((5 7,(,1 7(0325$5< 6:$/(72 7+(6$7,6)$&7,21 2) 7+(&% $6 6((5(48,5('

3529,'(7(0325$5< &29(5 68&+ $6 6(('(',1* 25 08/&+,1* ,) ',6785%(' $5($6 :,// 127 %(5(+$%,/,7$7(' :,7+,1 '$<6

,163(&7 6,/7)(1&(6),/7(5)$%5,& $1' 6,/7)(1&(5(3$,56 $1' 7+(1((')25 5(3$,5 :+(1 1(&(66$5<

5(029(6(',0(17)520 6,/7)(1&(5(9,6(' $6 5(48,5(' '85,1* &216758&7,21

(526,21 &21752/)(1&,1* 72 %($/62 ,167$//('

'2 127 /2&$7(72 6725(3,/(6 $1' (;&$9$7,21 0$7(5,$/ &/26(5 7+$1 ˘P)520 $1< 3$9(' 685)$&(25 1(: :25. $1' 9,/ 72 %(3,/(6 $1' 3529,'(6,/7)(1&($5281' 7+(3,/(,6 72 %(5(029(' 72 3529,'(6('(1( )25 7+(3,/(,) 1(&(66$5< 6,7(:,7+,1 ,1&/8',1* 6((' 72 *52: /21*(5 7+$1 '$<6

&21752/ :,1' %/2:1 '867 2)) 6,7(%< 6(('(',1* 72320,1* 3,/(6 $1' 27+(5 7(0325$5< 6:$/(&29(5 72 %(5(48,5(' $1' 72 7+(6$7,6)$&7,21 2) 7+((1*,1((5

12 $/7(51$7(0(7+2'6 2) (526,21 3527(&7,21 6+$// %(3(50,77(' 81/(66 $33529(' %< 7+( ),(/' (1*,1((5

&,7< 52$':$< $1' 6,'(:$/. 72 %(&/($1(' 2) $// 6(',0(17)520 9(+,&8/$5 75$&.,1* $6 5(48,5('

'85,1* :(7 &21',7,216 7,5(6 2) $// 9(+,&/(6 (48,30(17 /($9,1* 7+(6,7(72 %(6&5$3('

$1< 08' 0$7(5,$/ 75$&.(' 2172 7+(52$' 6+$// %(5(029(' ,00(',$7(/< %< +$1' 25 58%%(5 7,5(' /2$'(5

7$.($// 1(&(66$5< 67(36 72 35(9(17 %8,/',1* 0$7(5,$/ &216758&7,21 '(%5,6 25 :$67(%(,1* 63,//(' 25 75$&.(' 2172 $%877,1* 3523(57,(6 25 38%/,& 675((76 '85,1* &216758&7,21 $1' 352&((',1* :,7+ &/($1 83 $1< $5($6 62 $))(&7('

˘ $// (526,21 &21752/ 6758&785(72 5(0$,1 ,1 3/$&(817,/ $// ',6785%(' *5281' 685)$&(6 +$9(%((1 67$%,/,=(' (,7+(5 %< 3$9,1* 25 5(6725$7,21 2) 9(*(7$7,9(*5281' &29(5

˘ 7+(&2175$&725 6+$// ,03/(0(17 %(67 0$1$*(0(17 35$&7,&(6 72 3529,'( )25 3527(&7,21 2) 7+($5($ '5$,1$*(6<67(0 $1' 7+(5(&(,9,1* :$7(5&2856('85,1* &216758&7,21 $&7,9,7,(6 7+(&2175$&725 $&.12:/('*(6 7+$7)$,/85(72 ,03/(0(17 $335235,$7((526,21 $1' 6(',0(17 &21752/ 0($685(6 0$< %(68%-(&7 72 3(1$/7,(6 ,0326(' %< $1< $33/,&$%/(5(*8/$725< $*(1&<

&2175$&725 72 5(,167$7(52$' &876 $6 3(5 &,7< 2) 277$:$ '(7$,/ 5

&2175$&725 72 35(3$5(68%*5$'(,1&/8',1* 3522)52//,1* 72 7+(6$7,6)$&7,21 2) 7+(*(27(&+1,&$/ &2168/7$17 35,25 72 7+(&200(1&(0(17 2) 3/$&(0(17 2) *5$18/$5 % 0$7(5,$/

),// 72 %(3/$&(' $1' &203$&7(' 3(5 7+(*(27(&+1,&$/ 5(3257 5(48,5(0(176

&2175$&725 72 6833/< 3/$&($1' &203$&7 *5$18/$5 % 0$7(5,$/ ,1 $&&25'$1&(:,7+ 7+(5(&200(1'$7,216 2) 7+(*(27(&+1,&$/ &2168/7$17 &2175$&725 72 3529,'(&2168/7$17 :,7+ 6$03/(6 2) *5$18/$5 % 0$7(5,$/)25 7(67,1* $1' &(57,),&$7,21)520 7+(*(27(&+1,&$/ &2168/7$17 7+$7 7+(0$7(5,$/ 0((76 7+(*5$'$7,21 5(48,5(0(176 63(&,),(' ,1 7+(*(27(&+1,&$/ 5(3257

*5$18/$5 $ 0$7(5,$/ 72 %(3/$&(' 21/< 8321 33529/ %< 7+(*(27(&+1,&$/ &2168/7$17 2) *5$18/$5 % 3/$&(0(17

&2175$&725 72 6833/< 3/$&($1' &203$&7 *5$18/$5 $ 0$7(5,$/ ,1 $&&25'$1&(:,7+ 7+(5(&200(1'$7,216 2) 7+(*(27(&+1,&$/ &2168/7$17 &2175$&725 72 3529,'(&2168/7$17 :,7+ 6$03/(6 2) *5$18/$5 $ 0$7(5,$/)25 7(67,1* $1' &(57,),&$7,21)520 7+(*(27(&+1,&$/ &2168/7$17 7+$7 7+(0$7(5,$/ 0((76 7+(*5$'$7,21 5(48,5(0(176 63(&,),(' ,1 7+(*(27(&+1,&$/ 5(3257

$63+$/7 0$7(5,$/ 72 %(3/$&(' 21/< 8321 33529/ %< 7+(*(27(&+1,&$/ &2168/7$17 2) *5$18/$5 $ 3/$&(0(17

&2175$&725 72 6833/< 3/$&($1' &203$&7 $63+$/7 0$7(5,$/ ,1 $&&25'$1&(:,7+ 7+(5(&200(1'$7,216 2) 7+(*(27(&+1,&$/ &2168/7$17 &2175$&725 72 3529,'(&2168/7$17 :,7+ 6$03/(6 2) $63+$/7 0$7(5,$/)25 7(67,1* $1' &(57,),&$7,21)520 7+(*(27(&+1,&$/ &2168/7$17 7+$7 7+(0$7(5,$/ 0((76 7+(5(48,5(0(176 63(&,),(' ,1 7+(*(27(&+1,&$/ 5(3257

&2175$&725 ,6 5(63216,%/( )25 (67$%/,6+,1* /,1($1' *5$'(,1 $&&25'$1&(:,7+ 7+(3/$16 $1' 3529,',1* 7+(&2168/7$17 :,7+ 9(5,),&$7,21 35,25 72 3/$&(0(17

$// (;&(66 0$7(5,$/ 72 %(+$8/(' 2))6,7($1' ',6326(' 2) $7 $1 $33529(' 0$7(5,$/ 6,7(6+28/' 7+(&2175$&725 :,6+ 72 ,1&25325$7($1< +$=$5'286 0$7(5,$/ &2175$&725 ,6 72 127,)< &2168/7$17 &2168/7$17 72 '(7(50,1($335235,$7(',6326$/ 0(7+2' /2&$7,21

3$9(0(17 6758&785(0$7(5,$/ 7<3(6 $1' 7+,&.1(66)25 +($9< '87< /,*+7 '87< $1' %$6.(7%$// &2857 $5($6 72 %($6 3(5 7+(5(&200(1'$7,216 2) 7+(*(27(&+1,&$/ 5(3257 $1' 6+2:1 21 7+('(7$,/ 3/$16

Notes: Watermain

$// :$7(50$,1 $1' :$7(50$,1 $33857$1$1&(6 0$7(5,$/6 $1' &216758&7,21 $1' 7(67,1* 0(7+2'6 6+$// &21)250 72 7+(&855(17 &,7< 2) 277$:$ $1' 0,1,675< 2) (19,5210(17 67$1'$5'6 $1' 63(&,),&$7,216

$// :$7(50$,1 PP ',$0(7(5 $1' 60$//(5 72 %(32/< 9,1</ &+/25,'(39& &/$66 ˘ '5 ˙ 0((7,1* $::$ & 63(&,),&$7,21 &˝

$// :$7(50$,1 72 %(,167$//(' $7 0,1,080 &29(5 2) P %(/2:),1,6+(' *5$'(:+(5(:$7(50$,16 &5266 29(5 27+(5 87,/,7,(6 $ 0,1,080 P &/($5$1&(6+$// %(0$,17$,1(' :+(5(:$7(50$,16 &5266 81'(5 27+(5 87,/,7,(6 $ 0,1,080 ˘ P &/($5$1&(6+$// %(0$,17$,1(' :+(5(7+(0,1,080 6(3$5$7,21 &$1127 %($&+,(9(' 7+(:$7(50$,1 6+$// %(,167$//(' $6 3(5 &,7< 2) 277$:$ 67$1'$5'6 : ˘ $1' : ˘ :+(5(P 0,1,080 '(37+ &$1127 %($&+,(9(' 7+(50$/ ,168/$7,21 6+$// %(3529,'(' $6 3(5 &,7< 2) 277$:$ 67$1'$5' :+(5($:$7(50$,1 ,6 ,1 352;,0,7< 72 $1 23(1 6758&785(7+(50$/ ,168/$7,21 6+$// %(3529,'(' $6 3(5 &,7< 2) 277$:$ 67$1'$5' :

&21&5(7(7+5867 %/2&.6 $1' 0(&+$1,&$/ 5(675$,176 $5(72 %(,167$//(' 21 $// :$7(50$,1 %(1'6 +<'5$176 5('8&(56 $1' 7((6 $1' $// 27+(5 3/$&(6 $6 3(5 &,7< 2) 277$:$ 67$1'$5'6 : ˘

&$7+2'(& 3527(&7,21 5(48,5(')25 $// ,521),77,1*6 $6 3(5 &,7< 2) 277$:$ 67$1'$5'6 :

$// 9$/9(6 $1' 9$/9(%2;(6 $1' &+$0%(56 +<'5$176 $1' +<'5$17 9$/9(6 $1' $66(0%/(6 6+$// %(,167$//(' $6 3(5 &,7< 2) 277$:$ 67$1'$5'6

),5(+<'5$17 /2&$7,21 $1' ,167$//$7,21 $6 3(5 &,7< 2) 277$:$ 67$1'$5'6 : ˙ : ˝ &2175$&725 72 3529,'( )/2: 7(67 $1' 3$,17,1* 2) 1(: +<'5$17 ,1 $&&25'$1&(:,7+ &,7< 2) 277$:$ 67$1'$5'6

,) :$7(5 0$,1 0867 %(')/(&7(' 72 0((7 $/,*10(17 (1685(7+$7 7+($0281 2) ')/(&7,21 86(' ,6 /(66 7+$1 +$/) 7+$7 5(&200(1'(' %< 7+(0$18)$&785(5

Parking Lot and Work in Public Rights of Way

&2175$&725 72 5(,167$7(52$' &876 $6 3(5 &,7< 2) 277$:$ '(7$,/ 5

&2175$&725 72 35(3$5(68%*5$'(,1&/8',1* 3522)52//,1* 72 7+(6$7,6)$&7,21 2) 7+(*(27(&+1,&$/ &2168/7$17 35,25 72 7+(&200(1&(0(17 2) 3/$&(0(17 2) *5$18/$5 % 0$7(5,$/

),// 72 %(3/$&(' $1' &203$&7(' 3(5 7+(*(27(&+1,&$/ 5(3257 5(48,5(0(176

&2175$&725 72 6833/< 3/$&($1' &203$&7 *5$18/$5 % 0$7(5,$/ ,1 $&&25'$1&(:,7+ 7+(5(&200(1'$7,216 2) 7+(*(27(&+1,&$/ &2168/7$17 &2175$&725 72 3529,'(&2168/7$17 :,7+ 6$03/(6 2) *5$18/$5 % 0$7(5,$/)25 7(67,1* $1' &(57,),&$7,21)520 7+(*(27(&+1,&$/ &2168/7$17 7+$7 7+(0$7(5,$/ 0((76 7+(*5$'$7,21 5(48,5(0(176 63(&,),(' ,1 7+(*(27(&+1,&$/ 5(3257

*5$18/$5 $ 0$7(5,$/ 72 %(3/$&(' 21/< 8321 33529/ %< 7+(*(27(&+1,&$/ &2168/7$17 2) *5$18/$5 % 3/$&(0(17

&2175$&725 72 6833/< 3/$&($1' &203$&7 *5$18/$5 $ 0$7(5,$/ ,1 $&&25'$1&(:,7+ 7+(5(&200(1'$7,216 2) 7+(*(27(&+1,&$/ &2168/7$17 &2175$&725 72 3529,'(&2168/7$17 :,7+ 6$03/(6 2) *5$18/$5 $ 0$7(5,$/)25 7(67,1* $1' &(57,),&$7,21)520 7+(*(27(&+1,&$/ &2168/7$17 7+$7 7+(0$7(5,$/ 0((76 7+(*5$'$7,21 5(48,5(0(176 63(&,),(' ,1 7+(*(27(&+1,&$/ 5(3257

$63+$/7 0$7(5,$/ 72 %(3/$&(' 21/< 8321 33529/ %< 7+(*(27(&+1,&$/ &2168/7$17 2) *5$18/$5 $ 3/$&(0(17

&2175$&725 72 6833/< 3/$&($1' &203$&7 $63+$/7 0$7(5,$/ ,1 $&&25'$1&(:,7+ 7+(5(&200(1'$7,216 2) 7+(*(27(&+1,&$/ &2168/7$17 &2175$&725 72 3529,'(&2168/7$17 :,7+ 6$03/(6 2) $63+$/7 0$7(5,$/)25 7(67,1* $1' &(57,),&$7,21)520 7+(*(27(&+1,&$/ &2168/7$17 7+$7 7+(0$7(5,$/ 0((76 7+(5(48,5(0(176 63(&,),(' ,1 7+(*(27(&+1,&$/ 5(3257

&2175$&725 ,6 5(63216,%/( )25 (67$%/,6+,1* /,1($1' *5$'(,1 $&&25'$1&(:,7+ 7+(3/$16 $1' 3529,',1* 7+(&2168/7$17 :,7+ 9(5,),&$7,21 35,25 72 3/$&(0(17

$// (;&(66 0$7(5,$/ 72 %(+$8/(' 2))6,7($1' ',6326(' 2) $7 $1 $33529(' 0$7(5,$/ 6,7(6+28/' 7+(&2175$&725 :,6+ 72 ,1&25325$7($1< +$=$5'286 0$7(5,$/ &2175$&725 ,6 72 127,)< &2168/7$17 &2168/7$17 72 '(7(50,1($335235,$7(',6326$/ 0(7+2' /2&$7,21

3$9(0(17 6758&785(0$7(5,$/ 7<3(6 $1' 7+,&.1(66)25 +($9< '87< /,*+7 '87< $1' %$6.(7%$// &2857 $5($6 72 %($6 3(5 7+(5(&200(1'$7,216 2) 7+(*(27(&+1,&$/ 5(3257 $1' 6+2:1 21 7+('(7$,/ 3/$16

Notes: Storm Sewer and Manholes

$// 67250 6(:(5 0$7(5,$/6 $1' &216758&7,21 0(7+2'6 6+$// &21)250 72 7+(&855(17 &,7< 2) 277$:$ 67$1'$5'6 $1' 63(&,),&$7,216 3529,'(&&79 ,163(&7,21 5(32576)25 $// 1(: 67250 6(:(56 6(59,&(6 $1' &% /($'6

67250 6(:(56 ˘ PP ',$0(7(5 $1' 60$//(5 6+$// %(39& 6'5 ˘ :,7+ 58%%(5 *$6.(7 3(5 &6$ $ ˘ˆ

67250 6(:(5 /$5*(5 7+$1 ˘ PP 6+$// %(5(,1)25&(' &21&5(7(&/$66

6(:(5 %('',1* $6 3(5 &,7< 2) 277$:$ '(7$,/ 6˘

$// 67250 0$1+2/(6 72 %($6 3(5 67250 6758&785(7$%/(21 '5$:,1* &

$1< 1(: 25 (;,67,1* 67250 6(:(5 :,7+ /(66 7+$1 P &29(5 5(48,5(6 7+(50$/ ,168/$7,21 $6 3(5 &,7< 2) 277$:$ 67$1'$5' : 25 $33529(' %< 7+((1*,1((5 &% ,1 /$1'6&$3($5($6 6+$// %($6 3(5 &,7< 2) 277$:$ 67$1'$5'6 6˝ 6 $1' 6

$// &$7&+%$6,1 /($'6 72 %(0,1,080 PP ',$0(7(5 0,1,080 6/23(81/(66 27+(5:,6(63(&,),(')

67250 &$7&+%$6,16 $6 3(5 236' ˆ˘ $1')5$0(&29(5 $6 3(5 &,7< 2) 277$:$ '5$:,1* 6 ˝ 67250 &%0+ 6 $6 ,1',&$7(' ,1 7$%/(:,7+ 6803 $'-8670(17 6(&7,216 6+$// %($6 3(5 236' ˆ

,167$//$7,21 2))/2: &21752/ ,&' 6 72 %(9(5,),(' %< &2175$&725 $1' ,163(&7(' %< (1*,1((5 35,25 72 $&&(37$1&(2) 7+(6,7(6(59,&,1*

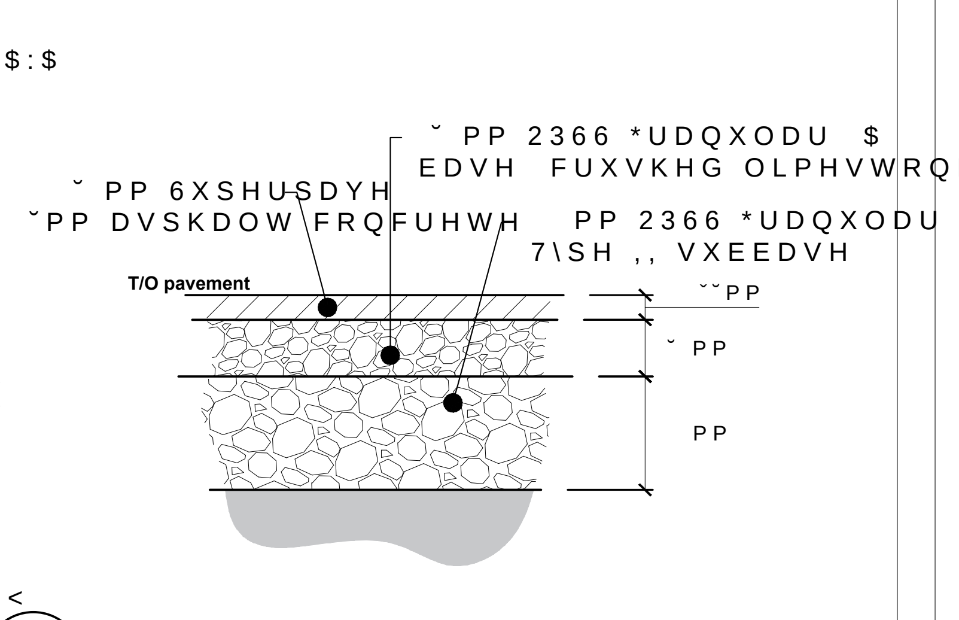

˘ PP 6XSHUSDYH
˘PP DVSKDOW FRQFUHWH
˘ PP 2366 *UDQXODU $ EDVH FUXVKHG OLPHVWRQH
PP 2366 *UDQXODU % 7\SH ,, VXEEDVH
T/O pavement
˘˘PP
˘ PP
PP

1 C3 **Pavement Structure for Light Duty Traffic (Typ.)**

6FDOH N.T.S

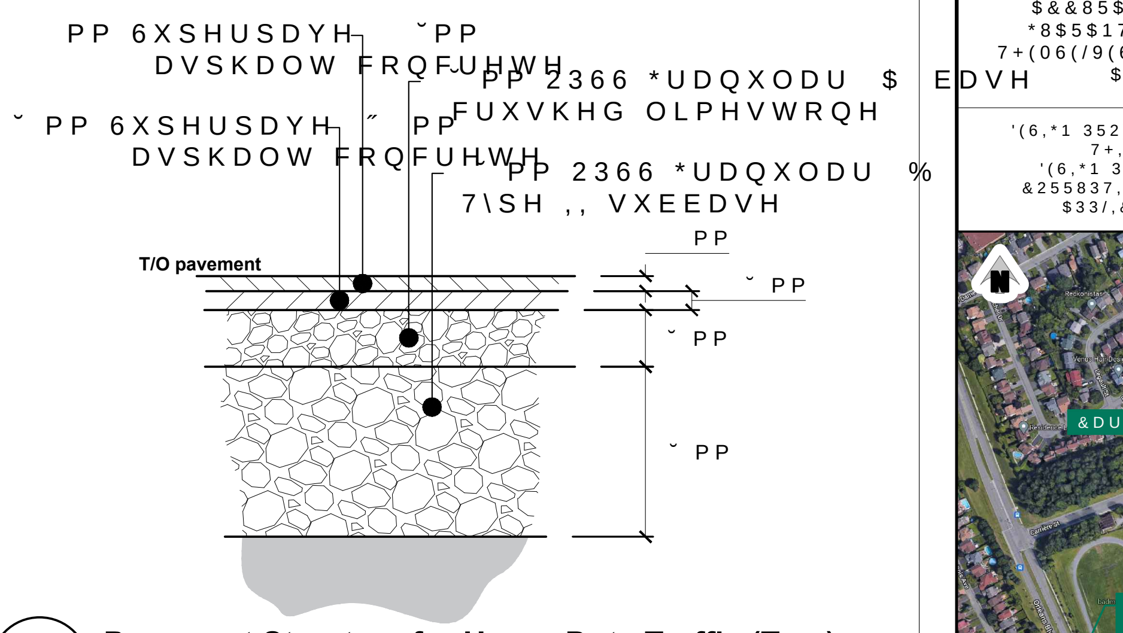

PP 6XSHUSDYH ˘PP DVSKDOW FRQFUHWH
˘ PP 6XSHUSDYH ˘ PP DVSKDOW FRQFUHWH
˘PP 2366 *UDQXODU $ EDVH FUXVKHG OLPHVWRQH
PP 2366 *UDQXODU % 7\SH ,, VXEEDVH
T/O pavement
PP
˘ PP
˘ PP
˘ PP

2 C3 **Pavement Structure for Heavy Duty Traffic (Typ.)**

6FDOH N.T.S

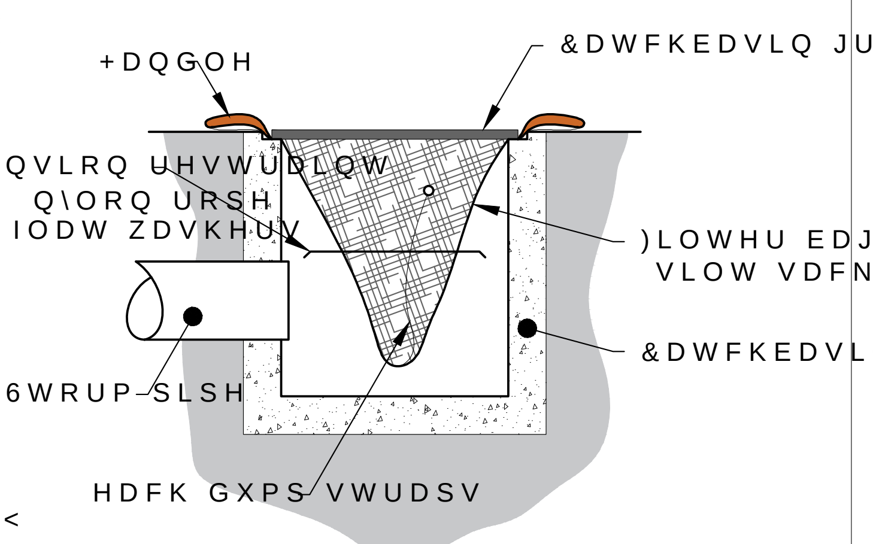

+DQGOH
&DWFKEDVLQ JUDWH
([SDQVLRQ UHVWUDLQW Q\ORQ URSH IODW ZDVKHUV
)LOWHU EDJ VLOW VDFN
&DWFKEDVLQ
6WUXP SLSH
HDFK GXPS VWUDSV

3 C3 **Catchbasin Filter Bag / Insert**

6FDOH N.T.S

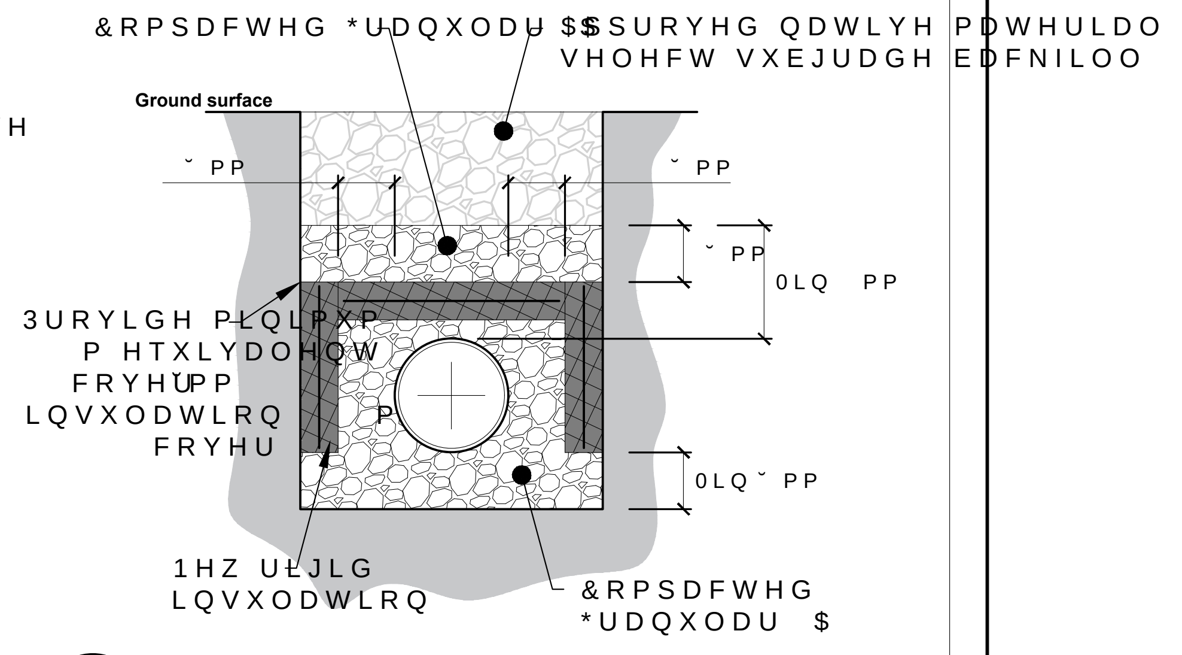

&RPSDFWHG *UDQXODU $
$SSURYHG QDWLYH PDWHULDO RU VHOHFW VXEJUDGH EDFNILOO
Ground surface
˘ PP
˘ PP
˘ PP
0LQ PP
3URYLGH PLQLPXP P HTXLYDOHQW FRYHU˘PP LQVXODWLRQ FRYHU
P
0LQ ˘ PP
1HZ ULJLG LQVXODWLRQ
&RPSDFWHG *UDQXODU $

4 C3 **Standard Trench c/w Thermal Insulation Detail**

6FDOH N.T.S

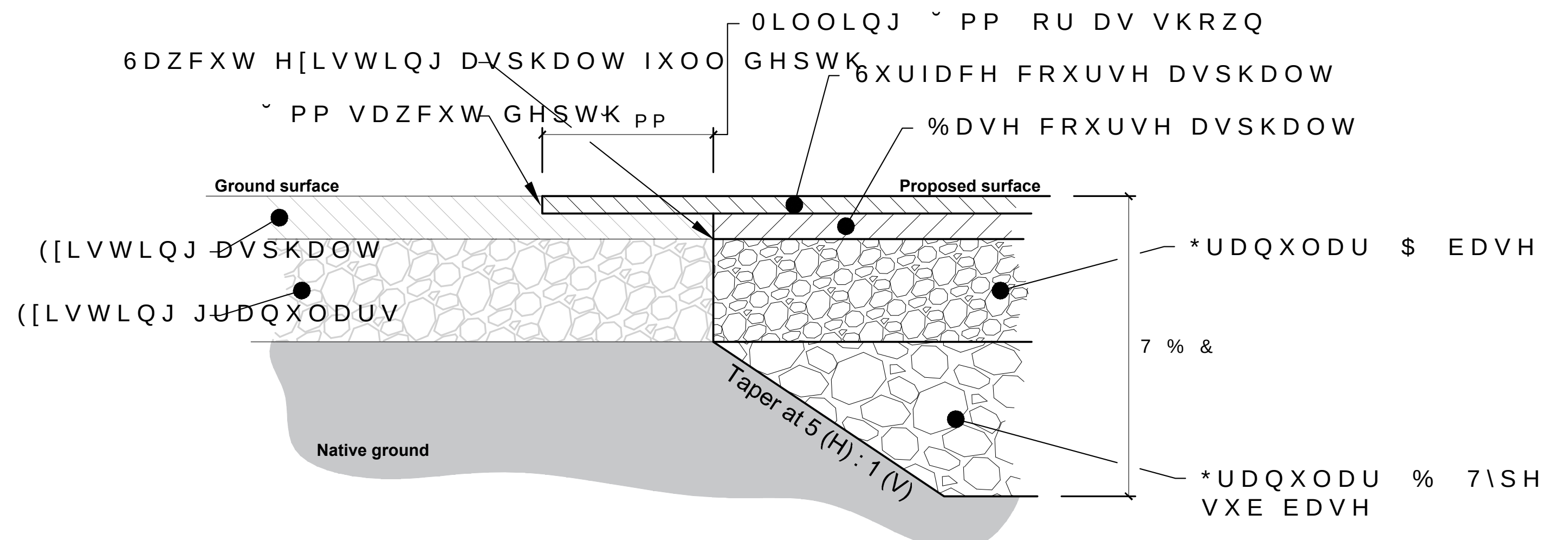

0LOOLQJ ˘ PP RU DV VKRZQ
6DZFXW H[LVWLQJ DVSKDOW IXOO GHSWK
6XUIDFH FRXUVH DVSKDOW
˘ PP VDZFXW GHSWK PP
%DVH FRXUVH DVSKDOW
Ground surface
Proposed surface
([LVWLQJ DVSKDOW
([LVWLQJ JUDQXODUV
*UDQXODU $ EDVH
7 % &
Taper at 5 (H) : 1 (V)
Native ground
*UDQXODU % 7\SH VXE EDVH

5 C3 **Key Joint Detail**

6FDOH N.T.S

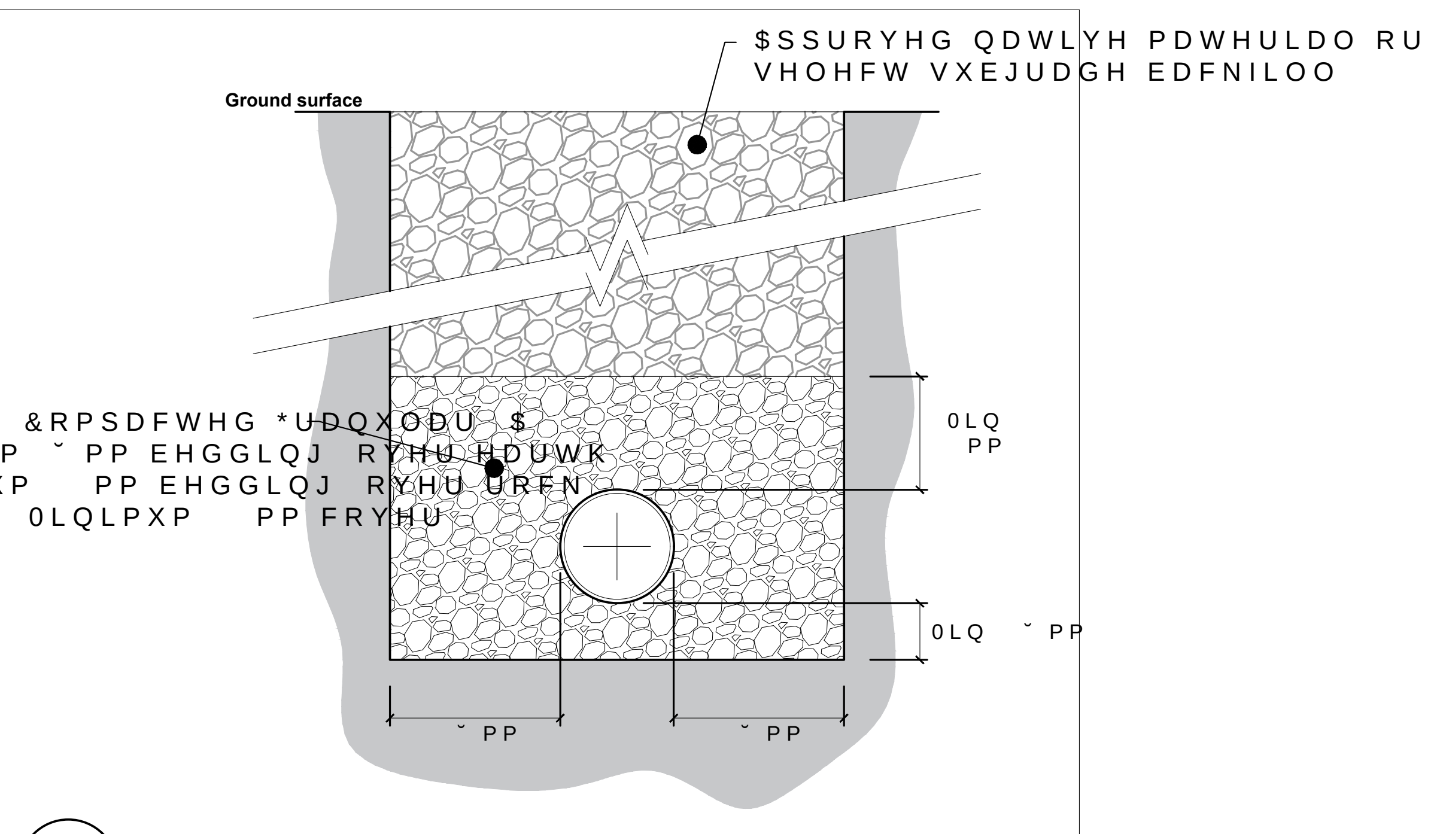

$SSURYHG QDWLYH PDWHULDO RU VHOHFW VXEJUDGH EDFNILOO
Ground surface
&RPSDFWHG *UDQXODU $
0LQLPXP ˘ PP EHGGLQJ RYHU KHDUWK
0LQLPXP PP EHGGLQJ RYHU URFN
0LQLPXP PP FRYHU
0LQ PP
0LQ ˘ PP
˘ PP
˘ PP

6 C3 **STANDARD WATERMAIN / SEWER TRENCH DETAIL**

6FDOH N.T.S

WATER SERVICE TABLE

ID	DESCRIPTION	FINISHED GRADE (m)	T/O WATERMAIN (m)
①	9$/9(	˙˘	˙ ˆ˘
②	67250 &5266,1*	˙˘ ˘	˙ ˙˘
③	˘… +25,=217$/ %(1'	˙˘	˙
④	67250 &5266,1*	˙˘ ˘	˙ ˙
⑤	˘… +25,=217$/ %(1'	˙˘ ˘	˙
⑥	˘… +25,=217$/ %(1'	˙˘ ˘˙	˙ ˙
⑦	˘… +25,=217$/ %(1'	˙˘ ˆ	˙
⑧	%8,/',1* &211(&7,21	˙ˆ	˙ ˘

127(˛ 3529,'(0,1,080 P &29(5 29(5 7 2 :$7(50$,1 72),1,6+(' *5$'(27+(5:,6(3529,'(7+(50$/ ,168/$7,21 +/ $6 3(5 &,7< 2) 277$:$ 67$1'$5' '(7$,/ :

7+(326,7,21 2) 32/(/,1(6 &21'8,76 :$7(50$,16 6(:(56 $1' 27+(5 81'(5*5281' $1' 29(5*5281' 87,/,7,(6 $1' 6758&785(6 ,6 127 1(&(66$5,/< 6+2:1 21 7+(&2175$&7 '5$:,1* $1' :+(5(6+2:1 7+($&&85$&< 2) 7+(326,7,21 2) 68&+ 87,/,7,(6 $1' 6758&785(6 ,6 127 *8$5$17((' %()25(67$57,1* :25. 7+(&2175$&725 6+$// ,1)250 7+(06(/9(6 2) 7+((;$&7 /2&$7,21 2) $// 68&+ 87,/,7,(6 $1' 6758&785(6 $1' 6+$// $6680($// /,$%,/,7<)25 '0*(72 7+(0

'(6,*1 352)(66,21$/¶6 6($/ 25 6,*1$785(,6 ())(&7,9(21/< $6 72 7+$7 9(56,21 2) 7+,6 '2&80(17 $6 25,*,1$//< 38%/,6+(' %< '(6,*1 352)(66,21$/ ,6 127 5(63216,%/( )25 $1< 68%6(48(17 02',),&$7,21 25 81$87+25,=(' 86(2) 68&+ '2&80(17 72 9(5,)< 7+(9$/,',7< $1' $33/,&$%,/,7< 2) 7+(6($/ 25 6,*1$785(&217$&7 '(6,*1 352)(66,21$/

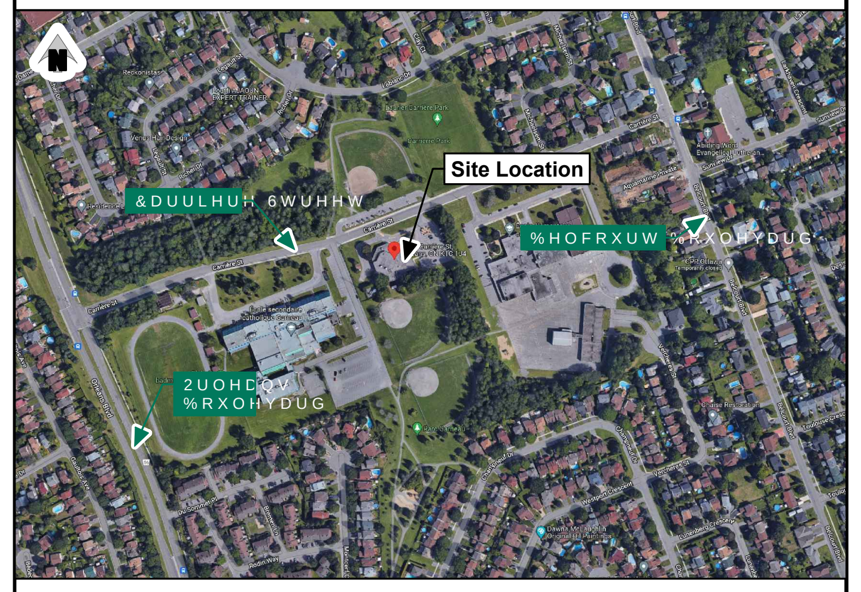

Site Location
&DUULHUH 6WUHHW
%HOFRXUW %RXOHYDUG
2UOHDQV %RXOHYDUG

	˘ ˘ ˘	'1	:9	^KhD/^^/KE WKhZ KEdZK> ˘h ^/d˝
	˘	'1	/$	/^^h˝˘ &KZ KE^dZh d/KE r ^/ ·ììí
˝	˘ ˘	'1	:9	^KhD/^^/KE WKhZ KEdZK> ˘h ^/d˝
˙	˘	'1	=%	/^^h˝˘ &KZ d˝E˘˝Z
ˆ		'1	=%	íìì9 ^KhD/^^/KE Zî
˘	˝	'1	=%	^KhD/^^/KE WKhZ KEdZK> ˘h ^/d
˘		'1	'6	íìì9 ^KhD/^^/KE Zí
	˝	'1	'6	íìì9 ^KhD/^^/KE
	˝	'1	'6	õõ9 ^KhD/^^/KE
	˘ ˆ	'1	'6	òì9 ^KhD/^^/KE
		'1	5:	WZ˚>/D/E /Z˝ ïì9
1R	<<<< 00 ''	(QJ	'UW	5HYLVLRQ &RPPHQWV

D.NGUYEN
100053149
0$< ˘

0,)2

˘˘ &$55,(5(675((7
277$:$ 217$5,2
a
*(1(5$/ 127(6
$1' '(7$,/6 ,

-S J &RQVXOWDQWV
(1*,1((56 M 3/$11(56 M 352-(&7 0$1$*(56

,17(51$7,21$/ '5,9(3(0%52.(21 3KRQH ˘ ˆ˘ ˘˘)D[˘ ˆ˘

˘ 0255,621 '5,9(68,7(277$:$ 21 3KRQH ˘ ˆ˘)D[˘

'HVLJQHG WV	3URMHFW 1R 21-5089A
'UDIWHG WV	5HYLVLRQ 'DWH 2025-04-10
&KHFNHG DN / $SSURYHG DN	5HYLVLRQ 1R 10
6FDOH 1:250	21-5089A

&

& 0,)2 6,7(3/$1 9 ':*

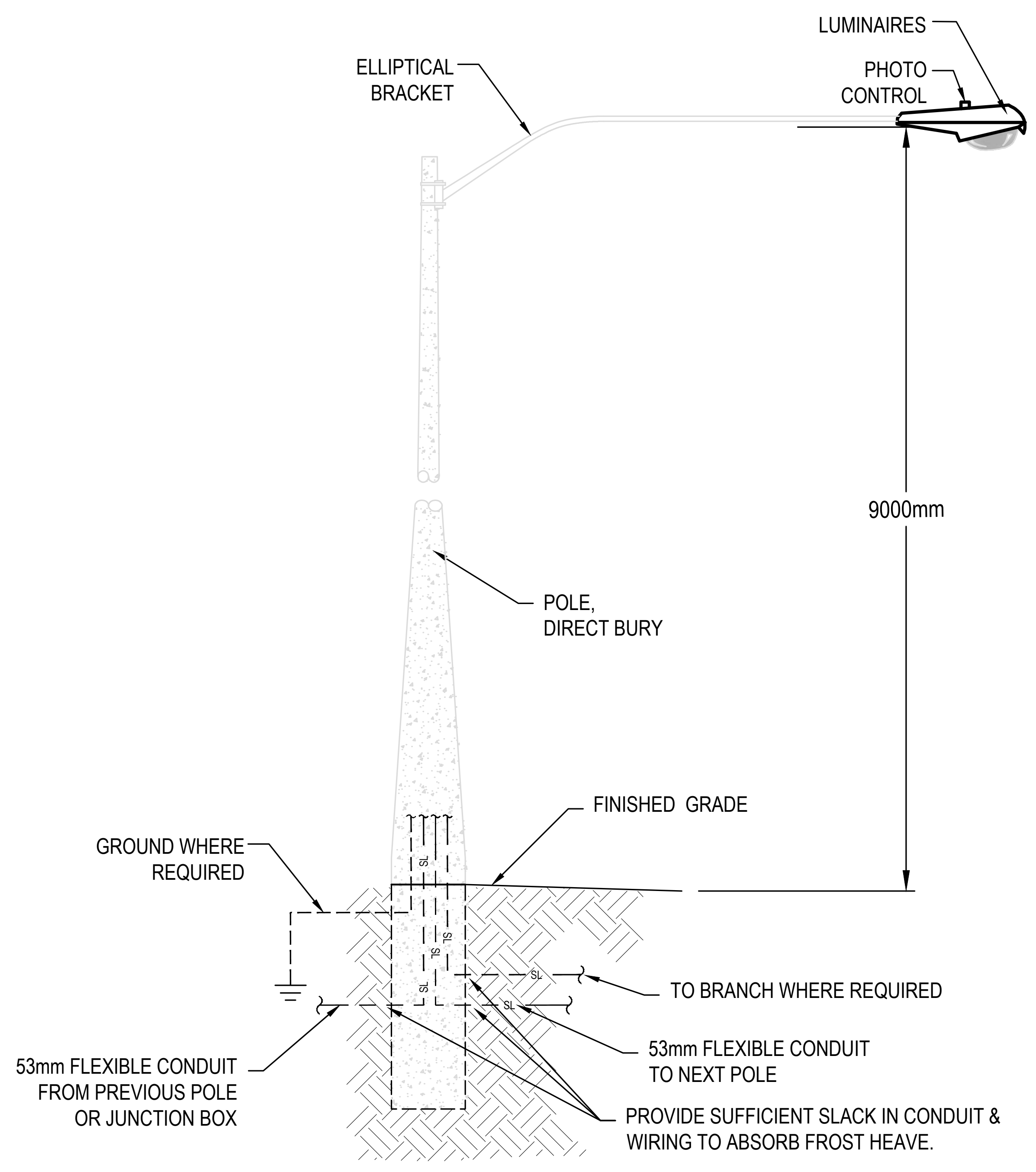
LUMINAIRES
ELLIPTICAL BRACKET
PHOTO CONTROL
9000mm
POLE, DIRECT BURY
FINISHED GRADE
GROUND WHERE REQUIRED
TO BRANCH WHERE REQUIRED
53mm FLEXIBLE CONDUIT TO NEXT POLE
53mm FLEXIBLE CONDUIT FROM PREVIOUS POLE OR JUNCTION BOX
PROVIDE SUFFICIENT SLACK IN CONDUIT & WIRING TO ABSORB FROST HEAVE.

7 / C4 LIGHT STANDARD DETAIL
Scale: **Not to scale**

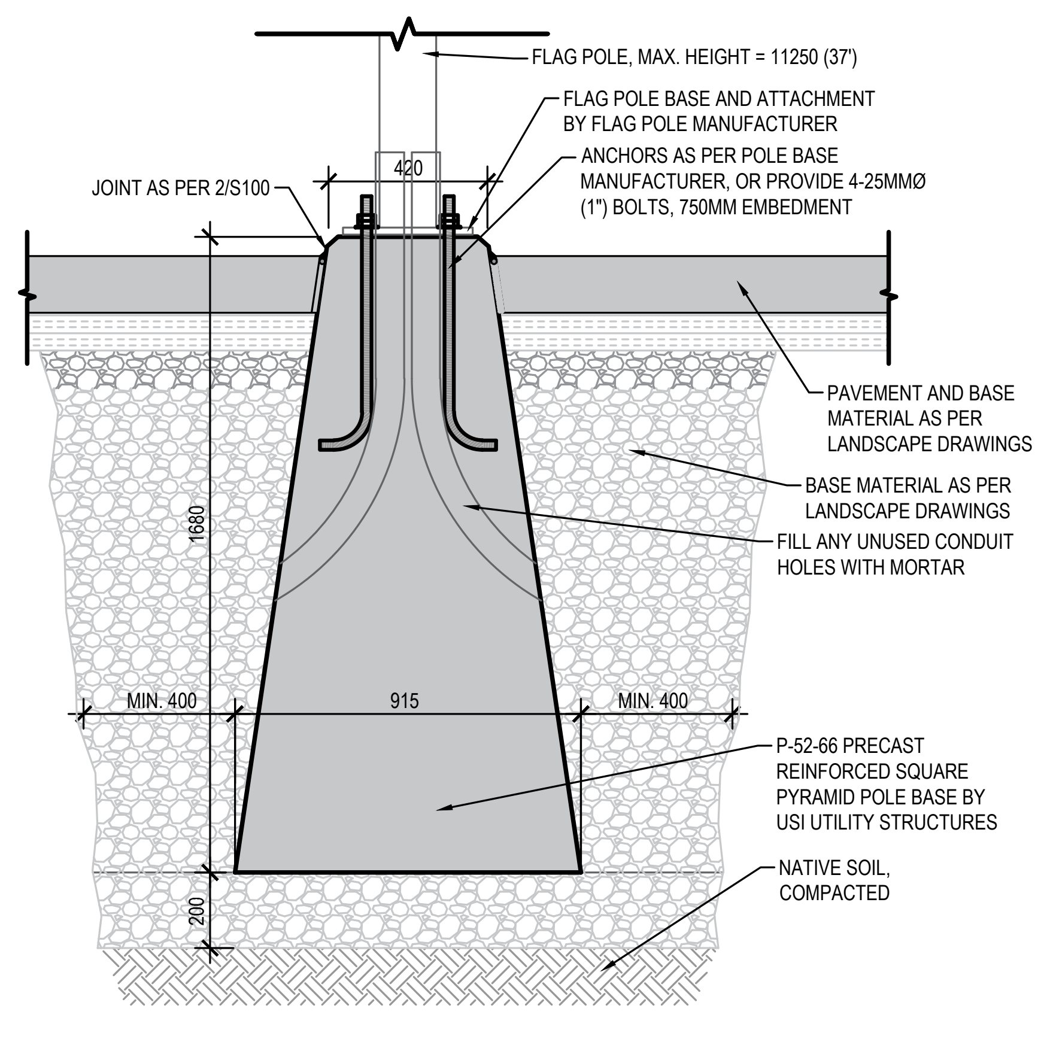
FLAG POLE, MAX. HEIGHT = 11250 (37')
FLAG POLE BASE AND ATTACHMENT BY FLAG POLE MANUFACTURER
ANCHORS AS PER POLE BASE MANUFACTURER, OR PROVIDE 4-25MMØ (1") BOLTS, 750MM EMBEDMENT
JOINT AS PER 2/S100
420
PAVEMENT AND BASE MATERIAL AS PER LANDSCAPE DRAWINGS
BASE MATERIAL AS PER LANDSCAPE DRAWINGS
FILL ANY UNUSED CONDUIT HOLES WITH MORTAR
1680
MIN. 400
915
MIN. 400
P-52-66 PRECAST REINFORCED SQUARE PYRAMID POLE BASE BY USI UTILITY STRUCTURES
NATIVE SOIL, COMPACTED
200

8 / C4 PRECAST FLAG POLE BASE (Typ.)
Scale: **As shown**

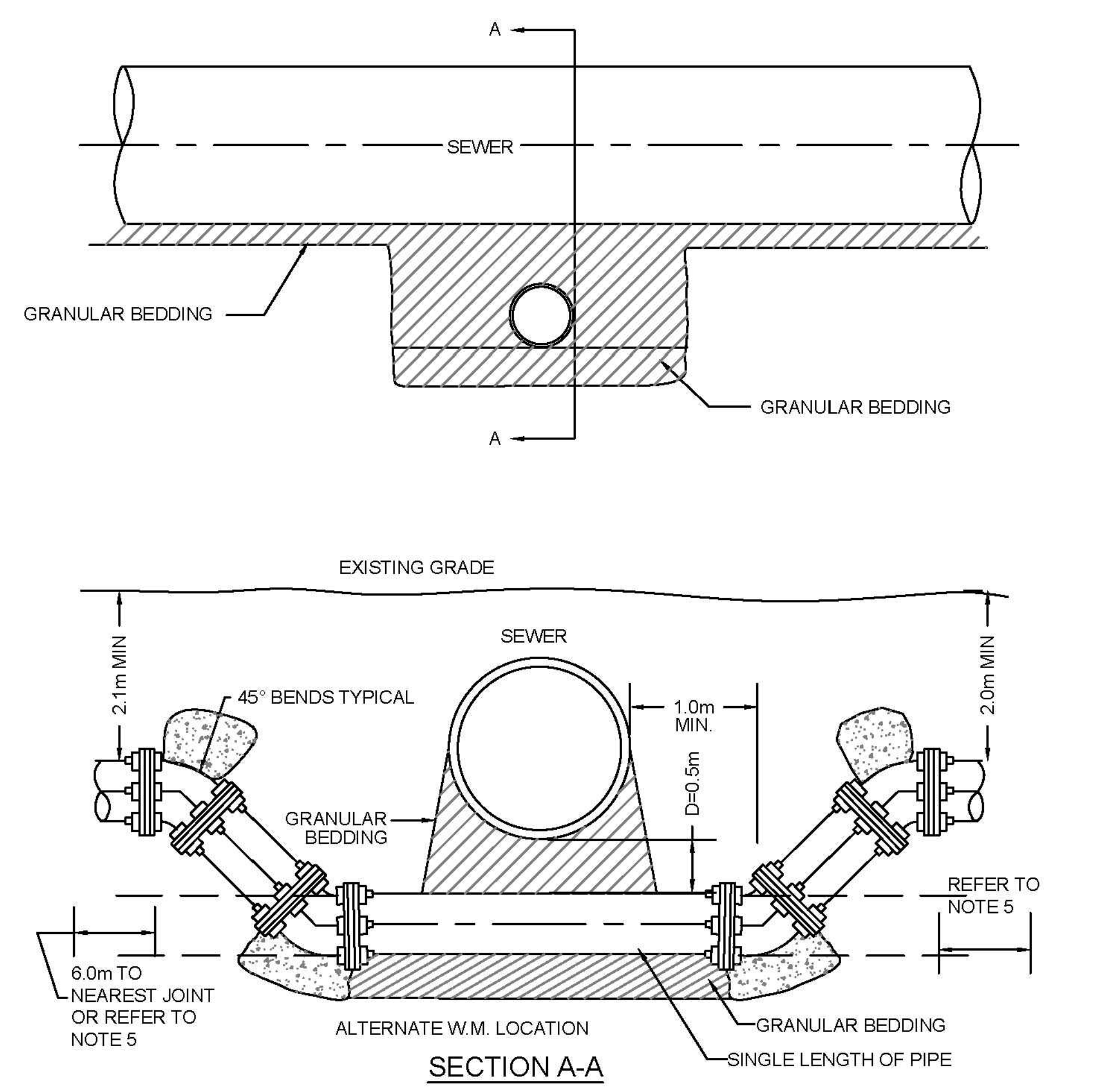
A
SEWER
GRANULAR BEDDING
GRANULAR BEDDING
A
EXISTING GRADE
SEWER
2.1m MIN
2.0m MIN
45° BENDS TYPICAL
1.0m MIN.
D=0.5m
GRANULAR BEDDING
REFER TO NOTE 5
6.0m TO NEAREST JOINT OR REFER TO NOTE 5
ALTERNATE W.M. LOCATION
GRANULAR BEDDING
SINGLE LENGTH OF PIPE

SECTION A-A

NOTES
1. BARREL TO BARREL SEPARATION SHALL BE 500mm MIN.
2. THRUST BLOCKS FOR MAINS LARGER THAN 400mm SHALL BE AS PER DESIGN.
3. FOR 300mm & 400mmØ MAINS, BENDS SHALL BE MAX. 22½°.
4. CONCRETE SHALL BE 20Mpa.
5. RETAINING RINGS AND /OR THREADED RODS TO BE USED AT ALL JOINTS WHERE CONCRETE THRUST BLOCKS CAN"T BE UTILIZED AND WHERE COUPLING CONNECTIONS ARE MADE LESS THAN 6.0m FROM THE JOINT.
6. THIS STANDARD APPLIES TO WATERMAINS 100mm TO 400mmØ (NOMINAL)

Jp2g Consultants Inc. ENGINEERS · PLANNERS · PROJECT MANAGERS
WATERMAIN CROSSING
BELOW A SEWER
DATE: MAR. 2003
REV.: MAR. 2014
DRAWING: **W-2A**

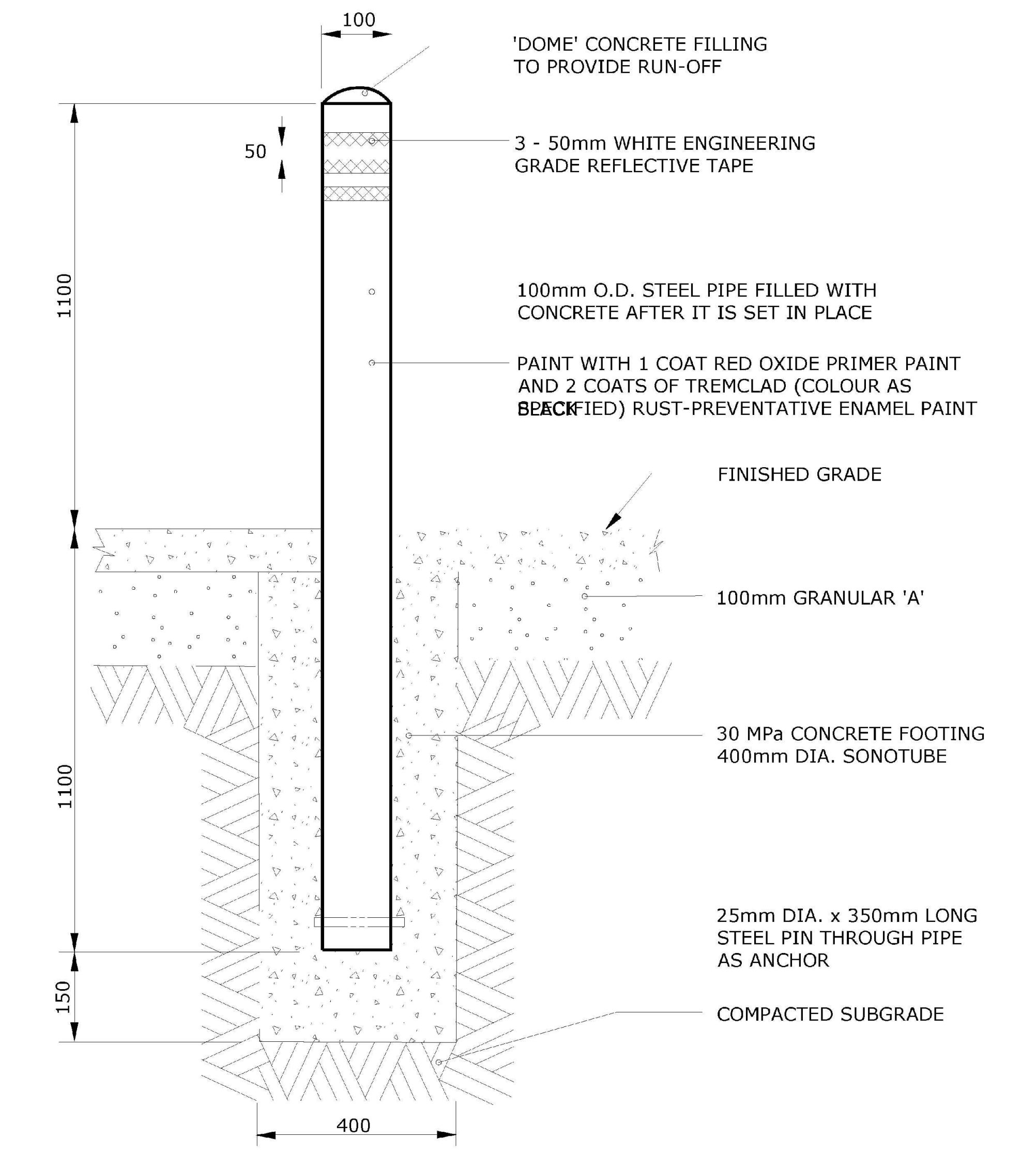
100
50
1100
1100
150
400
'DOME' CONCRETE FILLING TO PROVIDE RUN-OFF
3 - 50mm WHITE ENGINEERING GRADE REFLECTIVE TAPE
100mm O.D. STEEL PIPE FILLED WITH CONCRETE AFTER IT IS SET IN PLACE
PAINT WITH 1 COAT RED OXIDE PRIMER PAINT AND 2 COATS OF TREMCLAD (COLOUR AS SPECIFIED) RUST-PREVENTATIVE ENAMEL PAINT
FINISHED GRADE
100mm GRANULAR 'A'
30 MPa CONCRETE FOOTING 400mm DIA. SONOTUBE
25mm DIA. x 350mm LONG STEEL PIN THROUGH PIPE AS ANCHOR
COMPACTED SUBGRADE

NOTES:

ALL MEASUREMENTS ARE IN MILLIMETRES UNLESS OTHERWISE NOTED

Ottawa
TITLE: 100mm DIAMETER STEEL BOLLARD INSTALLATION FOR PARKING LOTS/PARKS
DATE: MAY 2001
REV: JAN 2015
DWG No: F5

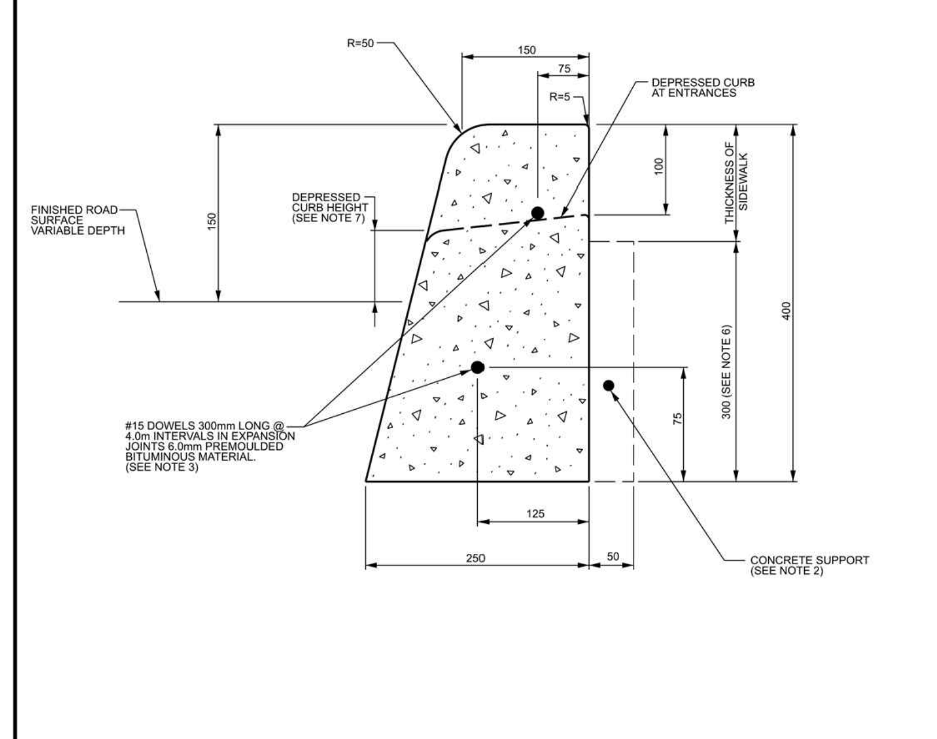
R=50
150
75
R=5
DEPRESSED CURB AT ENTRANCES
FINISHED ROAD SURFACE VARIABLE DEPTH
DEPRESSED CURB HEIGHT (SEE NOTE 7)
THICKNESS OF SIDEWALK
#15 DOWELS 300mm LONG @ 4.0m INTERVALS IN EXPANSION JOINTS 6.0mm PREMOULDED BITUMINOUS MATERIAL (SEE NOTE 3)
125
250
50
CONCRETE SUPPORT (SEE NOTE 2)

CONCRETE BARRIER CURB

NOTES:
1. THE FULL CURB DEPTH SHALL BE CARRIED THROUGH THE DEPRESSED ACCESS CROSSING.
2. A CONCRETE SUPPORT IS REQUIRED WHEN BUILT ADJACENT TO THE SIDEWALK.
3. IF AN EXTRUSION CURBING MACHINE IS USED, THE EXPANSION BITUMINOUS MATERIAL AND THE #15 DOWELS ARE TO BE PLACED AT THE END OF THE EXTRUSION.
4. ALL DIMENSIONS ARE IN MILLIMETRES UNLESS SHOWN OTHERWISE.
5. DUMMY JOINTS SHALL BE 25mm DEEP, FRONT, BACK AND TOP OF SECTION AT 4m SPACING OR MATCH JOINTING WHERE SIDEWALK IS ADJACENT.
6. FOR DEPRESSED CURB AT ENTRANCES USE 250.
7. DEPRESSED CURB HEIGHT - FOR PEDESTRIAN CURB RAMPS 0 TO 6 mm AND FOR PRIVATE ENTRANCES 0 TO 13mm.

N.T.S.

Ottawa
CONCRETE BARRIER CURB FOR GRANULAR BASE PAVEMENT (MODIFIED OPSD-600.110)
DATE: JANUARY 2003
REV. DATE: MARCH 2021
DWG. No.: SC1.1

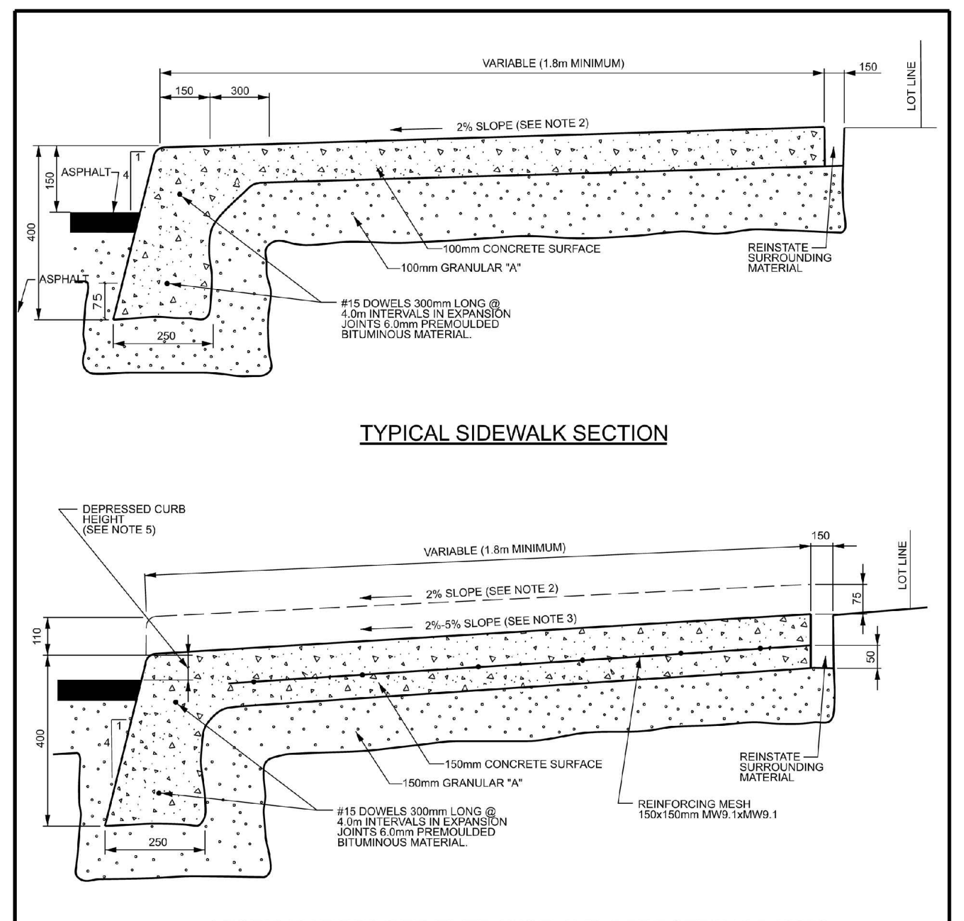
VARIABLE (1.8m MINIMUM)
2% SLOPE (SEE NOTE 2)
ASPHALT
100mm CONCRETE SURFACE
150mm GRANULAR "A"
#15 DOWELS 300mm LONG @ 4.0m INTERVALS IN EXPANSION JOINTS 6.0mm PREMOULDED BITUMINOUS MATERIAL
REINSTATE SURROUNDING MATERIAL
DEPRESSED CURB HEIGHT (SEE NOTE 5)
VARIABLE (1.5m MINIMUM)
2% TO 5% SLOPE (SEE NOTE 3)
150mm CONCRETE SURFACE
150mm GRANULAR "A"
REINFORCING MESH 150x150mm MW9.1xMW9.1

TYPICAL SIDEWALK SECTION

SECTION AT PRIVATE ENTRANCE AND PEDESTRIAN RAMPS

NOTES:
1. ALL DIMENSIONS ARE IN MILLIMETRES UNLESS SHOWN OTHERWISE.
2. THE MAXIMUM SLOPE IS NOT TO EXCEED 2%.
3. FOR CURB RAMPS, SLOPE OF 2% TO 5%, MAXIMUM 8%..
4. EXPANSION AND DUMMY JOINTS AS PER SC5.
5. DEPRESSED CURB HEIGHT - FOR PEDESTRIAN CURB RAMPS 0 TO 6 mm AND FOR PRIVATE ENTRANCES 0 TO 13 mm.

N.T.S.

Ottawa
MONOLITHIC CONCRETE CURB AND SIDEWALK
DATE: MAY 2001
REV. DATE: MAY 2021
DWG. No.: SC2

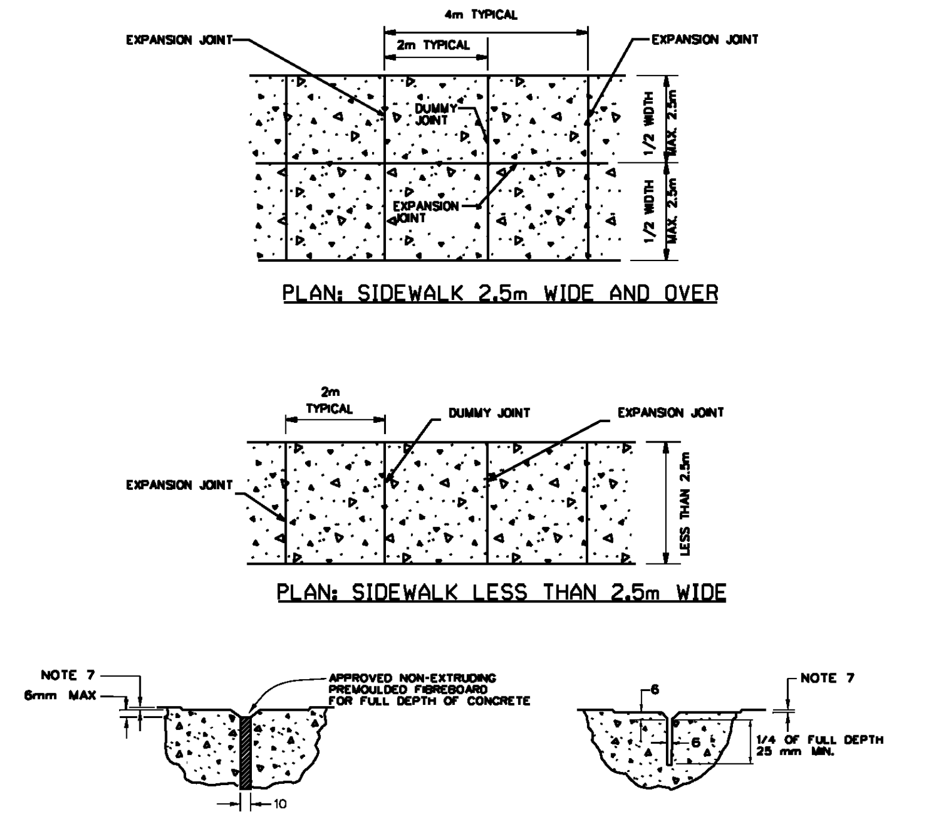
4m TYPICAL
2m TYPICAL
EXPANSION JOINT
DUMMY JOINT
EXPANSION JOINT
2m TYPICAL
DUMMY JOINT
EXPANSION JOINT
LESS than 2.5m
NOTE 7
5mm MAX
APPROVED NON-EXTRUDING PREMOULDED FIBREBOARD FOR FULL DEPTH OF CONCRETE
10
NOTE 7
6
1/4 OF FULL DEPTH 25 mm MIN.

PLAN: SIDEWALK 2.5m WIDE AND OVER

PLAN: SIDEWALK LESS THAN 2.5m WIDE

EXPANSION JOINT PROFILE

DUMMY JOINT PROFILE

NOTES:
1. EXPANSION JOINTS IN SIDEWALK SHALL BE IN LINE WITH EXPANSION JOINTS IN CURB.
2. TRANSVERSE EXPANSION JOINTS ARE REQUIRED AT THE ENDS, THE MIDPOINT, AT INTERVALS OF 4m MAXIMUM, AND ALSO TO ISOLATE OBSTRUCTIONS FROM SIDEWALK, HYDRANTS, POLES, BUILDINGS, ETC.
3. EDGES AND JOINTS ARE TO BE FINISHED WITH A 75mm EDGING TOOL.
4. ALL CONCRETE SIDEWALKS ARE TO HAVE A BROOM FINISH UNLESS OTHERWISE SPECIFIED.
5. ALL DIMENSIONS ARE IN MILLIMETRES UNLESS SHOWN OTHERWISE.
6. INSTALL DUMMY TRANSVERSE JOINTS AS REQUIRED SO THERE IS A MAXIMUM SPACING OF 2m BETWEEN ALL JOINTS.
7. SMOOTH ALL TOOLED EDGES TO A MAXIMUM DEPTH OF 1mm.

Ottawa
SIDEWALK CONSTRUCTION JOINTS
DATE: MAY 2001
REV. DATE: MARCH 2016
DWG. No.: SC5

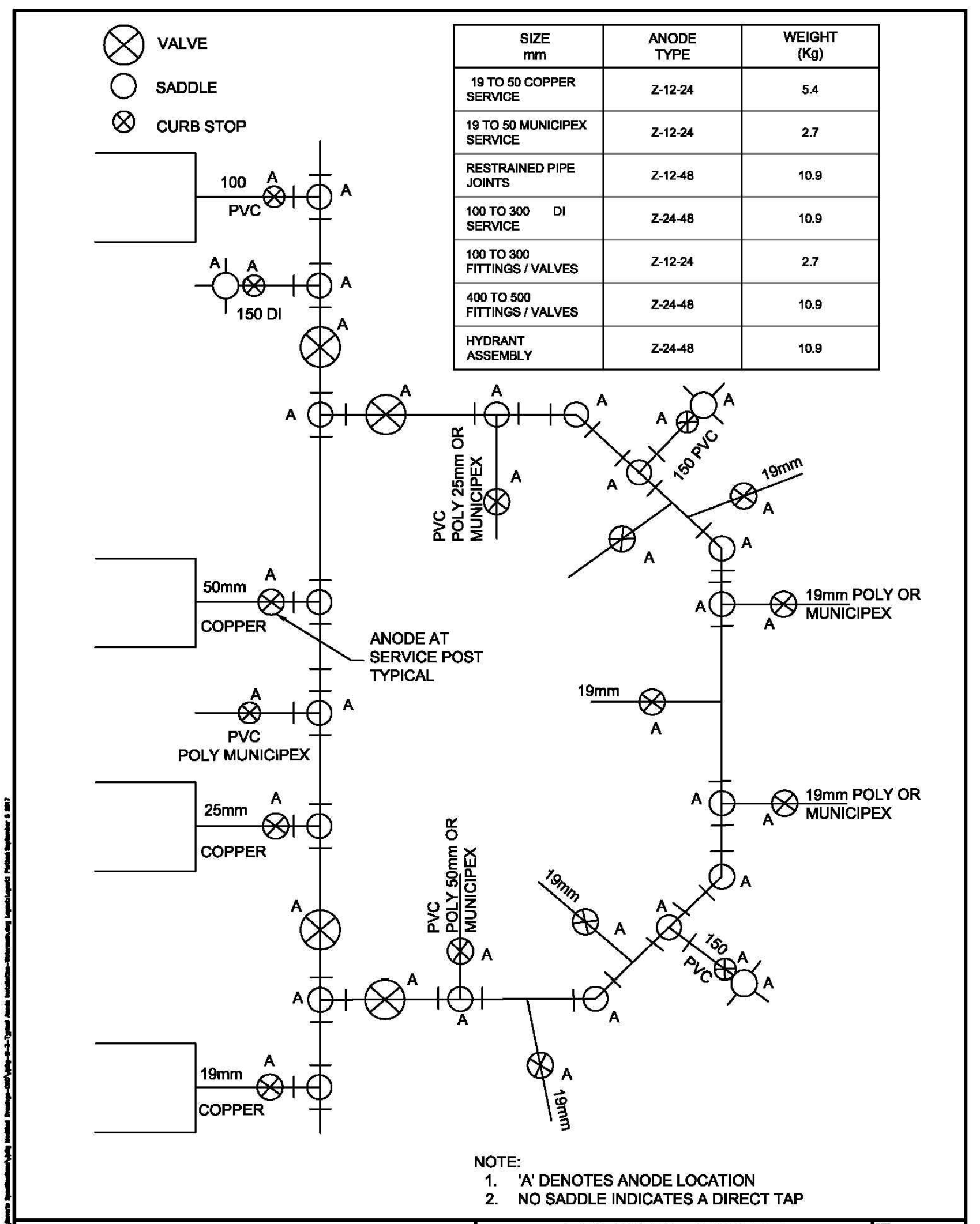
VALVE
SADDLE
CURB STOP
100 PVC
150 DI
150 PVC
19mm
50mm COPPER
PVC POLY 25mm OR MUNICIPEX
ANODE AT SERVICE POST TYPICAL
19mm POLY OR MUNICIPEX
PVC POLY MUNICIPEX
25mm COPPER
PVC POLY 50mm OR MUNICIPEX
19mm POLY OR MUNICIPEX
150 PVC
19mm COPPER
A

SIZE mm	ANODE TYPE	WEIGHT (Kg)
19 TO 50 COPPER SERVICE	Z-12-24	5.4
19 TO 50 MUNICIPEX SERVICE	Z-12-24	2.7
RESTRAINED PIPE JOINTS	Z-12-48	10.9
100 TO 300 DI SERVICE	Z-24-48	10.9
100 TO 300 FITTINGS / VALVES	Z-12-24	2.7
400 TO 500 FITTINGS / VALVES	Z-24-48	10.9
HYDRANT ASSEMBLY	Z-24-48	10.9

NOTE:
1. 'A' DENOTES ANODE LOCATION
2. NO SADDLE INDICATES A DIRECT TAP

Jp2g Consultants Inc. ENGINEERS · PLANNERS · PROJECT MANAGERS
TYPICAL ANODE INSTALLATION
PVC WATERMAIN
W-3

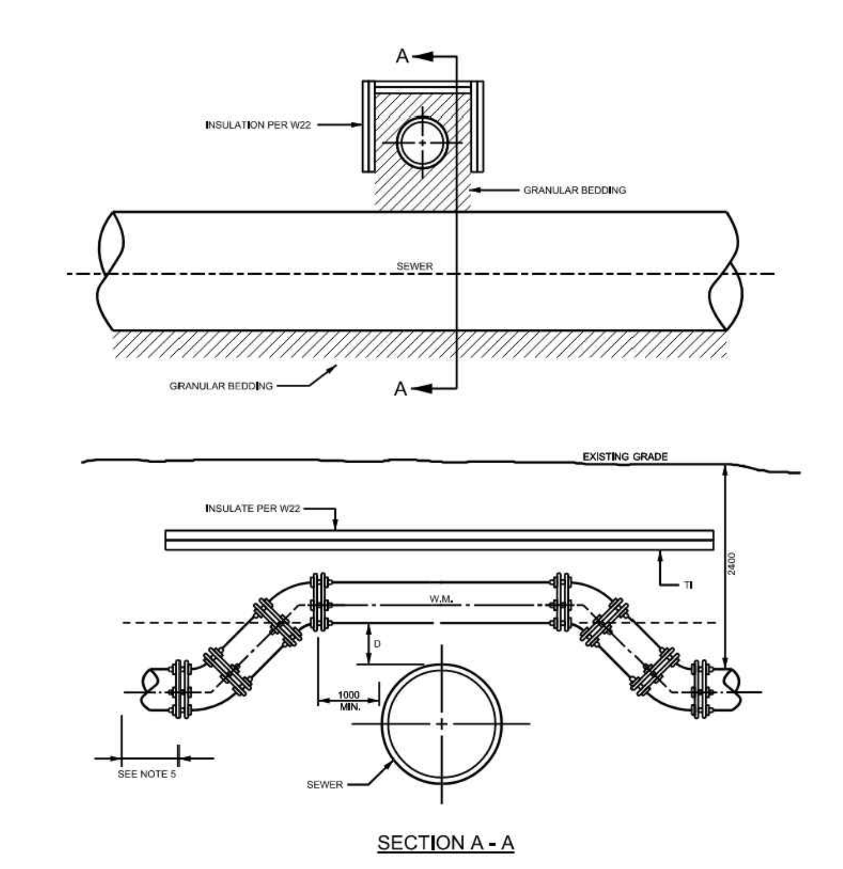
A
INSULATION PER W22
GRANULAR BEDDING
SEWER
GRANULAR BEDDING
A
EXISTING GRADE
INSULATE PER W22
1000 MIN.
SEE NOTE 5
SEWER

SECTION A - A

NOTES:

FOR WATERMAIN 100mm (NOMINAL) TO 400mm (NOMINAL)

1. BARREL TO BARREL SEPARATION (D) SHALL BE 250mm MINIMUM.
2. THRUST BLOCKS FOR MAINS LARGER THAN 400mm (NOMINAL) SHALL BE PER SPECIAL DESIGN.
3. FOR 300mm (NOMINAL) AND 400mm (NOMINAL) MAINS, BENDS SHALL BE MAX. 22° 30'.
4. CONCRETE FOR THRUST BLOCKS SHALL BE 20 MPa.
5. REFER TO W25.6 FOR RESTRAINED LENGTH REQUIREMENTS.
6. REFER TO W25.3 AND W25.4 FOR THRUST BLOCK REQUIREMENTS.
7. ALL DIMENSIONS ARE IN MILLIMETRES UNLESS SHOWN OTHERWISE.
8. DESIGNED TO MEET THE INTENT OF THE MOE WATERMAIN DESIGN CRITERIA JUNE 2012.
9. CATHODIC PROTECTION MEASURES SHALL BE INSTALLED IN ACCORDANCE WITH W39, W40, AND W42.
10. TRACER WIRE REQUIRED FOR PVC, PEX AND HDPE WATERMAIN PIPE ONLY AS PER W36.

Ottawa
WATERMAIN CROSSING OVER SEWER
DATE: MAY 2001
REV. DATE: MARCH 2021
DWG. No.: W25.2

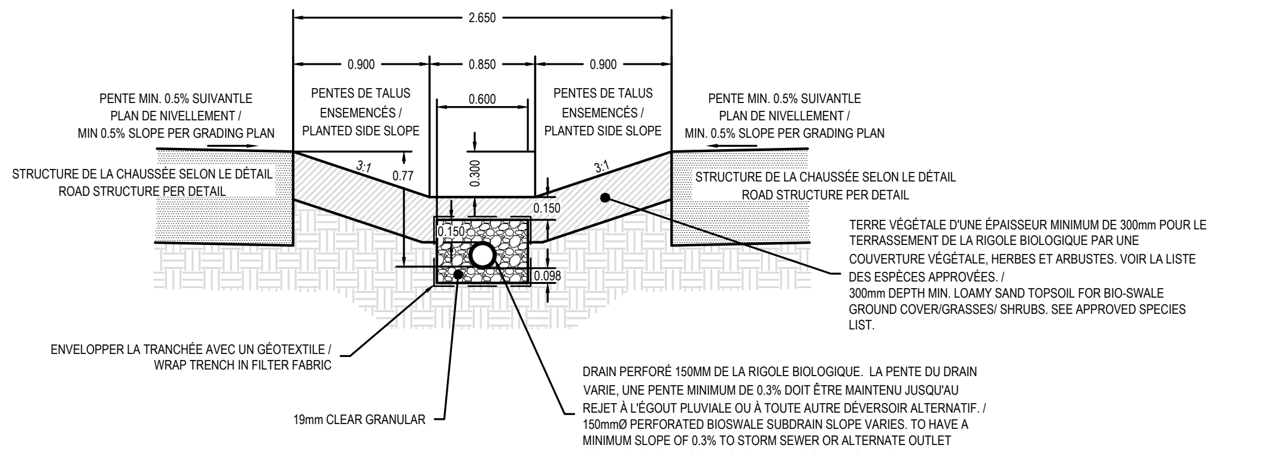
2.650
0.900
0.850
0.900
0.600
PENTE MIN. 0.5% SUIVANTLE PLAN DE NIVELLEMENT / MIN 0.5% SLOPE PER GRADING PLAN
PENTES DE TALUS ENSEMENCÉS / PLANTED SIDE SLOPE
PENTES DE TALUS ENSEMENCÉS / PLANTED SIDE SLOPE
PENTE MIN. 0.5% SUIVANTLE PLAN DE NIVELLEMENT / MIN. 0.5% SLOPE PER GRADING PLAN
3:1
0.77
0.300
3:1
STRUCTURE DE LA CHAUSSÉE SELON LE DÉTAIL ROAD STRUCTURE PER DETAIL
STRUCTURE DE LA CHAUSSÉE SELON LE DÉTAIL ROAD STRUCTURE PER DETAIL
0.150
0.150
0.098
TERRE VÉGÉTALE D'UNE ÉPAISSEUR MINIMUM DE 300mm POUR LE TERRASSEMENT DE LA RIGOLE BIOLOGIQUE PAR UNE COUVERTURE VÉGÉTALE, HERBES ET ARBUSTES. VOIR LA LISTE DES ESPÈCES APPROVÉES. / 300mm DEPTH MIN. LOAMY SAND TOPSOIL FOR BIO-SWALE GROUND COVER/GRASSES/ SHRUBS. SEE APPROVED SPECIES LIST.
ENVELOPPER LA TRANCHÉE AVEC UN GÉOTEXTILE / WRAP TRENCH IN FILTER FABRIC
19mm CLEAR GRANULAR
DRAIN PERFORÉ 150MM DE LA RIGOLE BIOLOGIQUE. LA PENTE DU DRAIN VARIE, UNE PENTE MINIMUM DE 0.3% DOIT ÊTRE MAINTENU JUSQU'AU REJET À L'ÉGOUT PLUVIALE OU À TOUTE AUTRE DÉVERSOIR ALTERNATIF. / 150mmØ PERFORATED BIOSWALE SUBDRAIN SLOPE VARIES. TO HAVE A MINIMUM SLOPE OF 0.3% TO STORM SEWER OR ALTERNATE OUTLET CONNECTION OR DISCHARGE. (REFER TO GRADING PLAN)

9 / C4 DÉTAIL DE RIGOLE BIOLOGIQUE
NEW BIO-SWALE DETAIL
Scale: **1:50**

NOTE:
1. LA LIGNE DE CENTRE DE LA RIGOLE BIOLOGIQUE SERPENTE LÀ OU LA LARGEUR DISPONIBLE LE PERMET.

   CENTER LINE OF BIO-SWALE TO MEANDER WHERE WIDTH ALLOWS.

2. TOUTES LES DIMENSIONS SONT EN MÈTRES SAUF INDICATION CONTRAIRE

   ALL DIMENSIONS ARE IN METERS UNLESS OTHERWISE NOTED.

CROSSING TABLE

LOCATION	OVER / UNDER	T/G	INVERT	OBVERT	CLEARANCE (m)
△1	NEW STORM - NEW WATERMAIN	86.26	84.36 (STORM)	83.86 (WM)	0.50
△2	NEW SANITARY - NEW STORM SEWER	86.38	83.96 (SAN)	83.54 (STORM)	0.42
△3	NEW WATERMAIN - NEW STORM SEWER	86.50	84.33 (WM)	83.83 (STORM)	0.50

THE POSITION OF POLE LINES, CONDUITS, WATERMAINS, SEWERS AND OTHER UNDERGROUND AND OVERGROUND UTILITIES AND STRUCTURES IS NOT NECESSARILY SHOWN ON THE CONTRACT DRAWING, AND, WHERE SHOWN, THE ACCURACY OF THE POSITION OF SUCH UTILITIES AND STRUCTURES IS NOT GUARANTEED. BEFORE STARTING WORK, THE CONTRACTOR SHALL INFORM THEMSELVES OF THE EXACT LOCATION OF ALL SUCH UTILITIES AND STRUCTURES, AND SHALL ASSUME ALL LIABILITY FOR DAMAGE TO THEM.

DESIGN PROFESSIONAL'S SEAL OR SIGNATURE IS EFFECTIVE ONLY AS TO THAT VERSION OF THIS DOCUMENT AS ORIGINALLY PUBLISHED BY DESIGN PROFESSIONAL. DESIGN PROFESSIONAL IS NOT RESPONSIBLE FOR ANY SUBSEQUENT MODIFICATION, CORRUPTION, OR UNAUTHORIZED USE OF SUCH DOCUMENT. TO VERIFY THE VALIDITY OR APPLICABILITY OF THE SEAL OR SIGNATURE, CONTACT DESIGN PROFESSIONAL.

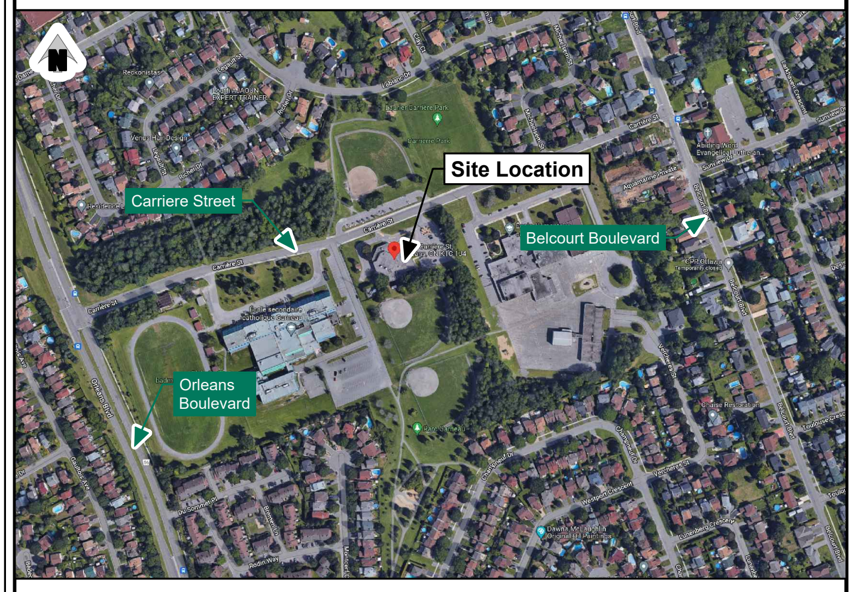
N
Site Location
Carriere Street
Belcourt Boulevard
Orleans Boulevard

No.	YYYY-MM-DD	Eng./Drft.	Revision Comments
11	2025-05-16	DN / WV	SOUMISSION POUR CONTROL DU SITE R3
10	2025-04-10	DN / LA	ISSUED FOR CONSTRUCTION - SI #001
9	2025-03-25	DN / WV	SOUMISSION POUR CONTROL DU SITE R2
8	2025-01-13	DN / ZB	ISSUED FOR TENDER
7	2024-12-20	DN / ZB	100% SOUMISSION R2
6	2022-12-09	DN / ZB	SOUMISSION POUR CONTROL DU SITE
5	2022-10-28	DN / DS	100% SOUMISSION R1
4	2022-09-30	DN / DS	100% SOUMISSION
3	2022-09-02	DN / DS	99% SOUMISSION
2	2022-06-17	DN / DS	60% SOUMISSION
1	2022-03-04	DN / RW	PRÉLIMINAIRE 30%

D.NGUYEN
100053149
MAY 16, 2025

MIFO
6600 CARRIÈRE STREET, OTTAWA, ONTARIO
~
GENERAL NOTES AND DETAILS II

Jp2g Consultants Inc.
ENGINEERS · PLANNERS · PROJECT MANAGERS

12 INTERNATIONAL DRIVE, PEMBROKE, ON
Phone: (613)735-2507, Fax:(613)735-4513

1150 MORRISON DRIVE, SUITE 410, OTTAWA, ON
Phone: (613)828-7800, Fax: (613)828-2600

Designed : **WV**		Project No. : **21-5089A**
Drafted : **WV**		Revision Date : **2025-04-10**
Checked : **DN**	Approved : **DN**	Revision No. : **10**
Scale : **1:250**		**21-5089A**

C4

C1 MIFO SITE PLAN V21.DWG

LEGEND

X 0.00 / 0.00	DRAINAGE AREA ID WEIGHTED RUNOFF COEFFICIENT DRAINAGE AREA HECTARES
▬ ▬	DRAINAGE AREA LIMIT

* ALLOWABLE RELEASE RATE = 108.8 l/s .
* C=0.5 IF CALCULATED PRE-DEVELOPMENT IS GREATER THAN 0.5
REFER TO PRE-CONSULTING MEETING NOTES : MAY 9th, 2022 .

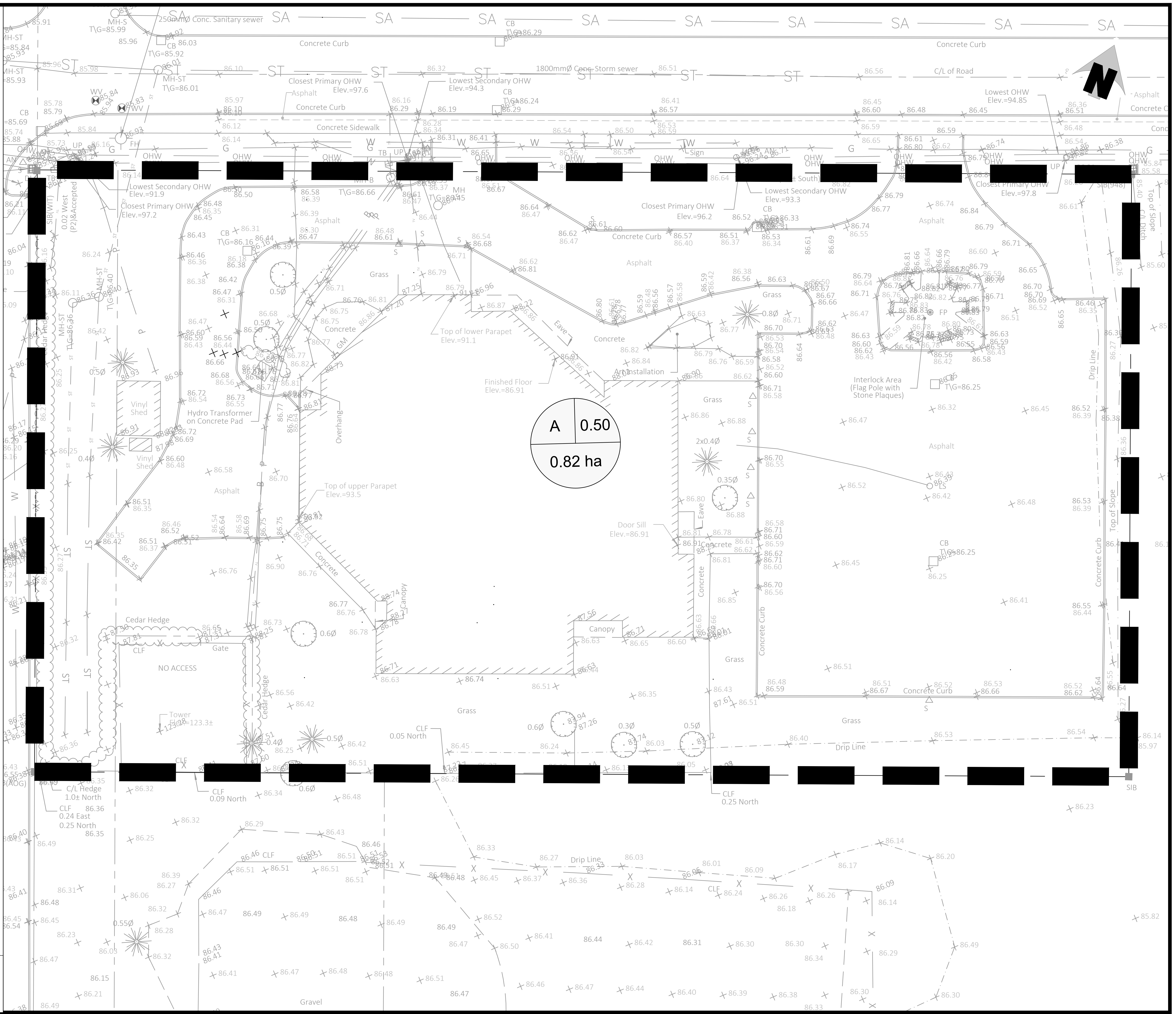
N
A
0.50
0.82 ha
250mmØ Conc. Sanitary sewer
1800mmØ Conc. Storm sewer
Concrete Curb
C/L of Road
Concrete Sidewalk
Asphalt
Grass
Concrete
Top of lower Parapet Elev.=91.1
Top of upper Parapet Elev.=93.5
Finished Floor Elev.=86.91
Door Sill Elev.=86.91
Hydro Transformer on Concrete Pad
Interlock Area (Flag Pole with Stone Plaques)
Vinyl Shed
Cedar Hedge
NO ACCESS
Gate
Canopy
Overhang
Drip Line
Top of Slope
Gravel
SIB

1:500
0 5 10 15 20 25 m
0 1:1 5 cm

Jp2g Consultants Inc.
ENGINEERS · PLANNERS · PROJECT MANAGERS

12 INTERNATIONAL DRIVE, PEMBROKE, ON
Phone: (613)735-2507, Fax:(613)735-4513

1150 MORRISON DRIVE, SUITE 410, OTTAWA, ON
Phone: (613)828-7800, Fax: (613)828-2600

MIFO New Building
6600 Carriere Street, Ottawa ONTARIO
~
FIGURE 1 PRE-DEVELOPMENT DRAINAGE AREAS

DESIGNED: WV		PROJECT No.: 21-5089
DRAFTED: WV		REVISION DATE: 2025-05-16
CHECKED: AS	APPROVED: AS	REVISION No.: 3
SCALE: 1:500		

DWG NAME: J:\5-CIVIL\2021\21-5089A - PROVENCHERE_ROY - MIFO NEW BUILDING CONSTRUCTION\05 DRAWINGS\1 ONGOING\C1 MIFO SITE PLAN V21.DWG LAYOUT: FIG.1_PRE_DEVELOPMENT_AREA SAVED ON May 16, 2025

LEGEND

X | 0.00
0.00

DRAINAGE AREA ID

WEIGHTED RUNOFF COEFFICIENT

DRAINAGE AREA HECTARES

▬ ▬ DRAINAGE AREA LIMIT

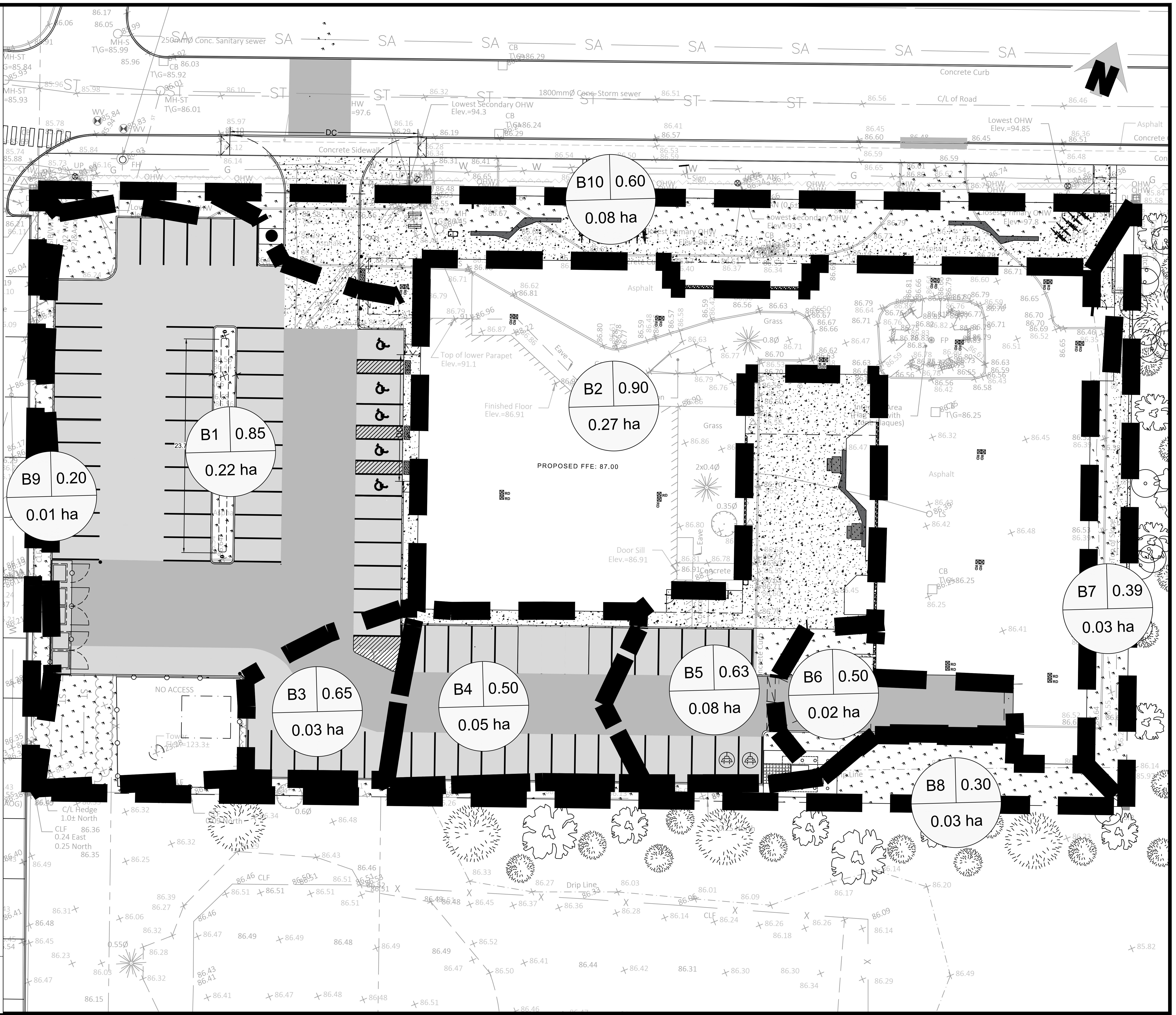
N
SA
ST
250mmØ Conc. Sanitary sewer
1800mmØ Conc. Storm sewer
Concrete Curb
C/L of Road
Concrete Sidewalk
Lowest Secondary OHW Elev.=94.3
Lowest OHW Elev.=94.85
B10 0.60 0.08 ha
B1 0.85 0.22 ha
B2 0.90 0.27 ha
B3 0.65 0.03 ha
B4 0.50 0.05 ha
B5 0.63 0.08 ha
B6 0.50 0.02 ha
B7 0.39 0.03 ha
B8 0.30 0.03 ha
B9 0.20 0.01 ha
PROPOSED FFE: 87.00
Finished Floor Elev.=86.91
Top of lower Parapet Elev.=91.1
Door Sill Elev.=86.91
Asphalt
Grass
Concrete
NO ACCESS
C/L Hedge 1.0± North
Drip Line

1:500
0 5 10 15 20 25 m
0 1:1 5 cm

Jp2g Consultants Inc.
ENGINEERS · PLANNERS · PROJECT MANAGERS

12 INTERNATIONAL DRIVE, PEMBROKE, ON
Phone: (613)735-2507, Fax:(613)735-4513

1150 MORRISON DRIVE, SUITE 410, OTTAWA, ON
Phone: (613)828-7800, Fax: (613)828-2600

MIFO New Building
6600 Carriere Street, Ottawa ONTARIO
~
FIGURE 2 POST-DEVELOPMENT DRAINAGE AREAS

DESIGNED: WV
DRAFTED: WV
CHECKED: AS
APPROVED: AS
SCALE: 1:500
PROJECT No.: 21-5089
REVISION DATE: 2025-05-16
REVISION No.: 3

DWG NAME: J:\5-CIVIL\2021\21-5089A - PROVENCHERE_ROY - MIFO NEW BUILDING CONSTRUCTION\05 DRAWINGS\1 ONGOING\C1 MIFO SITE PLAN V21.DWG LAYOUT: FIG.2_POST_DEVELOPMENT_AREA SAVED ON May 16, 2025

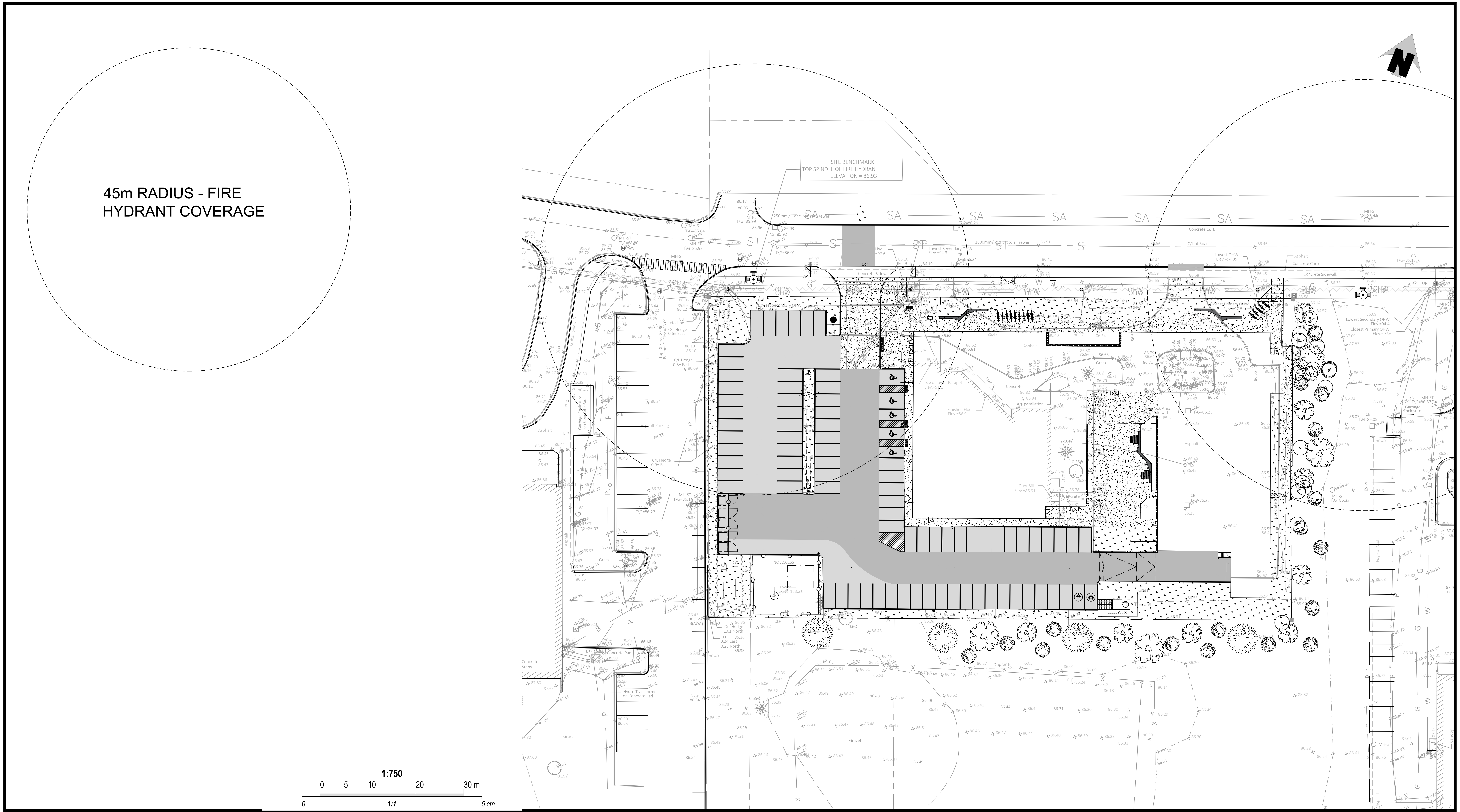
45m RADIUS - FIRE HYDRANT COVERAGE
SITE BENCHMARK
TOP SPINDLE OF FIRE HYDRANT
ELEVATION = 86.93
N
NO ACCESS
1:750
0 5 10 20 30 m
0 1:1 5 cm

Jp2g Consultants Inc.
ENGINEERS · PLANNERS · PROJECT MANAGERS

12 INTERNATIONAL DRIVE, PEMBROKE, ON
Phone: (613)735-2507, Fax:(613)735-4513

1150 MORRISON DRIVE, SUITE 410, OTTAWA, ON
Phone: (613)828-7800, Fax: (613)828-2600

MIFO New Building
6600 Carriere Street, Ottawa ONTARIO
~
FIGURE 3 FIRE HYDRANT COVERAGE AREA

DESIGNED: WV		PROJECT No.:	21-5089A
DRAFTED: WV		REVISION DATE:	2025-05-16
CHECKED: AS	APPROVED: AS	REVISION No.:	3
SCALE: 1:500			

DWG NAME: J:\5-CIVIL\2021\21-5089A - PROVENCHERE_ROY - MIFO NEW BUILDING CONSTRUCTION\05 DRAWINGS\1 ONGOING\C1 MIFO SITE PLAN V21.DWG LAYOUT: FIG.3_HYDRANT SAVED ON May 16, 2025

Appendix B - Stormwater Management Calculations

Appendix B - Storm Sewer Design Sheet

B.1.1 - Allowable release rate

ID	Description	Type	Areas (m^2) $C_{0.90}$	$C_{0.20}$	Total (m^2)	$C_{pre\text{-}5\text{-}yr}$	$C_{pre\text{-}100\text{-}yr}$*
A	Property Grounds	uncontrolled	4943	3236	8179	0.62	0.70
			4943	**3236**	**8179**	**0.50**	**0.63**

**including 25% increase as per City of Ottawa Sewer Design Guidelines*

As per Pre-Consulation Meeting, a C = 0.50 is to be used if the pre-development C is greater than 0.5

Estimated time of concentration, t_c = **10.0** minutes

Based on Ottawa IDF curve, $i_{2\text{-}years}$ = $732.951/(t_c+6.199)^{0.810}$

76.8 mm/hr

Total Area, A = **0.82** ha

$Q_{allowable\ (2\text{-}year)}$ = **87.3** l/s ①

B.1.2 - Post-development release rate

ID	Description	Type	Areas (m^2) $C_{0.90}$	$C_{0.20}$	Total (m^2)	$C_{post\text{-}5\text{-}yr}$	$C_{post\text{-}100\text{-}yr}$*
B1	Main Parking Lot (bioswale/CB1)	controlled	2041	164	2205	0.85	0.94
B2	Building Roof	controlled	2700	0	2700	0.90	1.00
B3	Rear Parking Lot (CBMH01)	controlled	172	95	267	0.65	0.73
B4	Rear Parking Lot (CBMH02)	controlled	204	276	480	0.50	0.57
B5	Rear Parking Lot (CBMH03)	controlled	486	298	784	0.63	0.71
B6	Trench Drain	controlled	102	136	238	0.50	0.57
B7	East Frontage	uncontrolled	70	185	254	0.39	0.46
B8	South Frontage	uncontrolled	48	292	340	0.30	0.36
B9	West Frontage	uncontrolled	0	107	105	0.20	0.25
B10	North Frontage	uncontrolled	459	347	806	0.60	0.68
		uncontrolle	**577**	**931**	**1505**	**0.47**	**0.54**
		Total	**6282**	**1900**	**8179**	**0.74**	**0.83**
	**including 25% increase as per City of Ottawa Sewer Design Guidelines*		(A)	(B)	©	(D)	(E)

Calculations for post-development runoff coefficient

$C_{post\text{-}5\text{-}yr\ (col.\ D)}$ = (column A * 0.9 + column B * 0.2) / column C

$C_{post\text{-}100\text{-}yr\ (col.\ E)}$ = (column A * 1.0 + column B * 0.2*1.25) / column C

Note: 0.90 x 1.25 = 1.125, use max. 1.0

Calculations for average weighted runoff coefficient

$C_{post\text{-}5\text{-}yr}$ = 0.74

$C_{post\text{-}100\text{-}yr}$ = 0.83

Estimated time of concentration, t_c = **10.0** minutes *****As per City of Ottawa Sewer Design Guidelines (Section 5.4.5.2)**

Based on Ottawa IDF curve, $i_{5\text{-}years}$ = $998.071/(t_c+6.053)^{0.814}$

104.2 mm/hr

Based on Ottawa IDF curve, $i_{100\text{-}years}$ = $1735.688/(t_c+6.014)^{0.820}$

178.6 mm/hr

B.1.2.1 - Uncontrolled overland surface flow

Total uncontrolled area, B7 - B10 **0.151** ha

5-year Runoff coefficient, $_{5\text{-}yr\text{-}uncontrolled}$ **0.47**

100-year Runoff coefficient, $_{100\text{-}yr\text{--}uncontrolled}$ **0.54**

Uncontrolled overland surface Release Rate 5-year **20.4** l/s ②

Uncontrolled overland surface Release Rate 100-year **40.2** l/s ④

B.1.2.2 - Net-allowable release rate for storm sewers

$Q_{net\text{-}allowable\ 5\text{-}year}$ = **66.9** l/s ③ = ①-②

***$Q_{net\text{-}allowable\ 100\text{-}year}$ =** **47.1** l/s ⑤ = ①-④ * Must be controlled to net-allowable 100-year

B.1.3 - Post-development Roof Drainage (B2)

B.1.3.1 - Estimated detention Roof

Area	**0.270**	ha
5-year Runoff coefficient	**0.90**	
100-year Runoff coefficient	**1.00**	
Roof Drains	**8.8**	l/s

Table 1.3.1a - 5-year estimated detention on roof

	Time (minutes)	$i_{5\text{-years}}$ (mm/hr)	Q_{actual} (l/s)	$Q_{allowable}$ (l/s)	Q_{stored} (l/s)	V_{stored} (m^3)
	10	104.2	70.4	8.8	61.6	37.0
peak V_{stored} →	15	83.6	56.4	8.8	47.6	42.9
	20	70.3	47.5	8.8	38.7	46.4
	25	60.9	41.1	8.8	32.3	48.5
	30	53.9	36.4	8.8	27.6	49.7
	35	48.5	32.8	8.8	24.0	50.3
	40	44.2	29.8	8.8	21.0	50.5
	45	40.6	27.4	8.8	18.6	50.3
	50	37.7	25.4	8.8	16.6	49.9
	55	35.1	23.7	8.8	14.9	49.3
	60	32.9	22.3	8.8	13.5	48.4

Therefore **51** m^3 estimated yard detention

Table 1.3.1b - 100-year estimated detention on roof

	Time (min)	$i_{100\text{-years}}$ (mm/hr)	Q_{actual} (l/s)	$Q_{allowable}$ (l/s)	Q_{stored} (l/s)	V_{stored} (m^3)
	10	178.6	134.0	8.8	125.2	75.1
	15	142.9	107.3	8.8	98.5	88.6
	20	120.0	90.0	8.8	81.2	97.5
peak V_{stored} →	25	103.8	77.9	8.8	69.1	103.7
	30	91.9	69.0	8.8	60.2	108.3
	35	82.6	62.0	8.8	53.2	111.7
	40	75.1	56.4	8.8	47.6	114.2
	45	69.1	51.8	8.8	43.0	116.2
	50	64.0	48.0	8.8	39.2	117.6
	55	59.6	44.8	8.8	36.0	118.6
	60	55.9	42.0	8.8	33.2	119.4

Therefore **119** m^3 estimated yard detention

Table 1.3.1c - 100-year +20% estimated detention on roof

	Time (min)	$i_{100\text{-years}}$ (mm/hr)	Q_{actual} (l/s)	$Q_{allowable}$ (l/s)	Q_{stored} (l/s)	V_{stored} (m^3)
	10	214.3	160.8	8.8	152.0	91.2
	15	171.5	128.7	8.8	119.9	107.9
	20	143.9	108.0	8.8	99.2	119.1
peak V_{stored} →	25	124.6	93.5	8.8	84.7	127.1
	30	110.2	82.7	8.8	73.9	133.1
	35	99.1	74.4	8.8	65.6	137.7
	40	90.2	67.7	8.8	58.9	141.3
	45	82.9	62.2	8.8	53.4	144.2
	50	76.7	57.6	8.8	48.8	146.4
	55	71.5	53.7	8.8	44.9	148.2
	60	67.1	50.3	8.8	41.5	149.6

Therefore **150** m^3 estimated yard detention

B.1.4 - Post-development onsite storage in Main Parking Lot (B1)

B.1.3.1 - Estimated detention

Area	**0.221**	ha	
5-year Runoff coefficient	**0.85**		
100-year Runoff coefficient	**0.94**		
Release Rate	**20.0**	l/s	***calculated in Visual OttHymo*

Table 1.4.1a - 5-year estimated detention in parking area

	Time (minutes)	$i_{5\text{-years}}$ (mm/hr)	Q_{actual} (l/s)	$Q_{allowable}$ (l/s)	Q_{stored} (l/s)	V_{stored} (m^3)
	10	104.2	54.2	20.0	34.2	20.5
peak V_{stored} →	15	83.6	43.4	20.0	23.4	21.1
	20	70.3	36.5	20.0	16.5	19.8

25	60.9	31.7	20.0	11.7	17.5
30	53.9	28.0	20.0	8.0	14.5
35	48.5	25.2	20.0	5.2	11.0
40	44.2	23.0	20.0	3.0	7.1
45	40.6	21.1	20.0	1.1	3.0
50	37.7	19.6	20.0	-0.4	-1.3
55	35.1	18.3	20.0	-1.7	-5.8
60	32.9	17.1	20.0	-2.9	-10.4

Therefore **21** m^3 estimated yard detention

Table 1.4.1b - 100-year estimated detention in parking area

	Time (min)	$i_{100\text{-years}}$ (mm/hr)	Q_{actual} (l/s)	$Q_{allowable}$ (l/s)	Q_{stored} (l/s)	V_{stored} (m^3)
	10	178.6	103.3	20.0	83.3	50.0
	15	142.9	82.7	20.0	62.7	56.4
	20	120.0	69.4	20.0	49.4	59.3
peak V_{stored} →	25	103.8	60.1	20.0	40.1	60.2
	30	91.9	53.2	20.0	33.2	59.7
	35	82.6	47.8	20.0	27.8	58.4
	40	75.1	43.5	20.0	23.5	56.4
	45	69.1	40.0	20.0	20.0	53.9
	50	64.0	37.0	20.0	17.0	51.0
	55	59.6	34.5	20.0	14.5	47.9
	60	55.9	32.4	20.0	12.4	44.5

Therefore **60** m^3 estimated yard detention

Table 1.4.1c - 100-year + 20% estimated detention in parking area

	Time (min)	$i_{100\text{-years}}$ (mm/hr)	Q_{actual} (l/s)	$Q_{allowable}$ (l/s)	Q_{stored} (l/s)	V_{stored} (m^3)
	10	214.3	124.0	20.0	104.0	62.4
	15	171.5	99.2	20.0	79.2	71.3
	20	143.9	83.3	20.0	63.3	76.0
	25	124.6	72.1	20.0	52.1	78.2
peak V_{stored} →	30	110.2	63.8	20.0	43.8	78.9
	35	99.1	57.4	20.0	37.4	78.4
	40	90.2	52.2	20.0	32.2	77.3
	45	82.9	48.0	20.0	28.0	75.5
	50	76.7	44.4	20.0	24.4	73.3
	55	71.5	41.4	20.0	21.4	70.7
	60	67.1	38.8	20.0	18.8	67.8

Therefore **79** m^3 estimated yard detention

B.1.5 - Post-development onsite storage in Rear Parking Lot (B3 - B6)

B.1.5.1 - Estimated detention

Area	**0.177**	ha
5-year Runoff coefficient	**0.58**	
100-year Runoff coefficient	**0.66**	
Release Rate	**18.3**	l/s

Table 1.5.1a - 5-year estimated detention in parking area

	Time (minutes)	$i_{5\text{-years}}$ (mm/hr)	Q_{actual} (l/s)	$Q_{allowable}$ (l/s)	Q_{stored} (l/s)	V_{stored} (m^3)
peak V_{stored} →	10	104.2	29.8	18.3	11.5	6.9
	15	83.6	23.9	18.3	5.6	5.0
	20	70.3	20.1	18.3	1.8	2.2
	25	60.9	17.4	18.3	-0.9	-1.3
	30	53.9	15.4	18.3	-2.9	-5.2
	35	48.5	13.9	18.3	-4.4	-9.3
	40	44.2	12.6	18.3	-5.7	-13.6
	45	40.6	11.6	18.3	-6.7	-18.0
	50	37.7	10.8	18.3	-7.5	-22.6
	55	35.1	10.0	18.3	-8.3	-27.2
	60	32.9	9.4	18.3	-8.9	-32.0

Therefore **7** m^3 estimated yard detention

Table 1.5.1b - 100-year estimated detention in parking area

	Time (min)	$i_{100\text{-years}}$ (mm/hr)	Q_{actual} (l/s)	$Q_{allowable}$ (l/s)	Q_{stored} (l/s)	V_{stored} (m^3)
	10	178.6	57.9	18.3	39.6	23.7
peak V_{stored} →	15	142.9	46.3	18.3	28.0	25.2
	20	120.0	38.9	18.3	20.6	24.7
	25	103.8	33.6	18.3	15.3	23.0
	30	91.9	29.8	18.3	11.5	20.6
	35	82.6	26.8	18.3	8.5	17.8
	40	75.1	24.3	18.3	6.0	14.5
	45	69.1	22.4	18.3	4.1	11.0
	50	64.0	20.7	18.3	2.4	7.3
	55	59.6	19.3	18.3	1.0	3.4
	60	55.9	18.1	18.3	-0.2	-0.7

Therefore **25** m^3 estimated yard detention

Table 1.3.1c - 100-year + 20% estimated detention in parking area

	Time (min)	$i_{100\text{-years}}$ (mm/hr)	Q_{actual} (l/s)	$Q_{allowable}$ (l/s)	Q_{stored} (l/s)	V_{stored} (m^3)
	10	214.3	69.4	18.3	51.1	30.7
peak V_{stored} →	15	171.5	55.6	18.3	37.3	33.5
	20	143.9	46.6	18.3	28.3	34.0
	25	124.6	40.4	18.3	22.1	33.1
	30	110.2	35.7	18.3	17.4	31.4
	35	99.1	32.1	18.3	13.8	29.0
	40	90.2	29.2	18.3	10.9	26.2
	45	82.9	26.8	18.3	8.5	23.1
	50	76.7	24.9	18.3	6.6	19.7
	55	71.5	23.2	18.3	4.9	16.1
	60	67.1	21.7	18.3	3.4	12.4

Therefore **34** m^3 estimated yard detention

B.1.6 - Post-development onsite storage in Rear Parking Lot (B3 - B6)

B.1.5.1 - Estimated detention

Area	**0.177**	ha
5-year Runoff coefficient	**0.58**	
100-year Runoff coefficient	**0.66**	
*Release Rate	**9.15**	l/s

*Release rate being reduced to half to compensate for less than max head over the course of a storm event. Storage calculations shown below

Table 1.5.1a - 5-year estimated detention in parking area

	Time (minutes)	$i_{5\text{-years}}$ (mm/hr)	Q_{actual} (l/s)	$Q_{allowable}$ (l/s)	Q_{stored} (l/s)	V_{stored} (m^3)
	10	104.2	29.8	9.2	20.7	12.4
peak V_{stored} →	15	83.6	23.9	9.2	14.7	13.3
	20	70.3	20.1	9.2	10.9	13.1
	25	60.9	17.4	9.2	8.3	12.4
	30	53.9	15.4	9.2	6.3	11.3
	35	48.5	13.9	9.2	4.7	9.9
	40	44.2	12.6	9.2	3.5	8.4
	45	40.6	11.6	9.2	2.5	6.7
	50	37.7	10.8	9.2	1.6	4.9
	55	35.1	10.0	9.2	0.9	3.0
	60	32.9	9.4	9.2	0.3	1.0

Therefore **13** m^3 estimated yard detention

Table 1.5.1b - 100-year estimated detention in parking area

	Time (min)	$i_{100\text{-years}}$ (mm/hr)	Q_{actual} (l/s)	$Q_{allowable}$ (l/s)	Q_{stored} (l/s)	V_{stored} (m^3)
	10	178.6	57.9	9.2	48.7	29.2
	15	142.9	46.3	9.2	37.1	33.4
	20	120.0	38.9	9.2	29.7	35.7
	25	103.8	33.6	9.2	24.5	36.7
peak V_{stored} →	30	91.9	29.8	9.2	20.6	37.1
	35	82.6	26.8	9.2	17.6	37.0
	40	75.1	24.3	9.2	15.2	36.5
	45	69.1	22.4	9.2	13.2	35.7

50	64.0	20.7	9.2	11.6	34.7
55	59.6	19.3	9.2	10.2	33.6
60	55.9	18.1	9.2	9.0	32.3

Therefore **37** m^3 estimated yard detention

Table 1.3.1c - 100-year + 20% estimated detention in parking area

	Time (min)	$i_{100\text{-years}}$ (mm/hr)	Q_{actual} (l/s)	$Q_{allowable}$ (l/s)	Q_{stored} (l/s)	V_{stored} (m^3)
	10	214.3	69.4	9.2	60.3	36.2
	15	171.5	55.6	9.2	46.4	41.8
	20	143.9	46.6	9.2	37.5	45.0
	25	124.6	40.4	9.2	31.2	46.8
	30	110.2	35.7	9.2	26.6	47.8
peak V_{stored} →	35	99.1	32.1	9.2	23.0	48.2
	40	90.2	29.2	9.2	20.1	48.2
	45	82.9	26.8	9.2	17.7	47.8
	50	76.7	24.9	9.2	15.7	47.1
	55	71.5	23.2	9.2	14.0	46.3
	60	67.1	21.7	9.2	12.6	45.3

Therefore **48** m^3 estimated yard detention

B.1.6 - Site storage

	5-year required (m3)	100-year required (m3)	100-year +20% required (m3)	Ponding depth (m)	Ponding area (m2)	Max available (m3)
Roof	**51**	**119**	**150**	**0.15**	**2700**	**135**
Main Parking Lot	**21**	**60**	**79**	**0.34**	**860**	**79**
Rear Parking Lot	**13**	**37**	**48**	**NA**	**NA**	**41***

*refer to Underground storage calculations

Oversized Pipe Storage for Rear Parking Lot

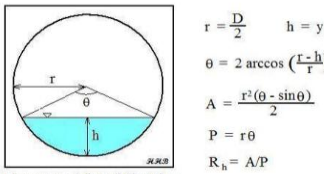

$r = \frac{D}{2}$ $h = y$

$\theta = 2 \arccos\left(\frac{r-h}{r}\right)$

$A = \frac{r^2(\theta - \sin\theta)}{2}$

$P = r\theta$

$R_h = A/P$

Figure 2. Partially Full Pipe Flow Parameters (Less than Half Full)

Diamater (mm)	Pipe Length (m)	Actual Flow (LPS)	Full Flow (LPS)	Q/Qf
1050	**47**	**18**	**1931**	**0.01**

h (mm)	Theta	Pipe Area	Area of Flow (m2)	Area of Storage (m2)	Volume Storage (m3)
18	**1**	**1**	**0.003**	**0.863**	**41**

*Therefore 30m3 of storage is provided in the 900mm oversized pipe between CBMH03 and STMH01

B.1.7 - Release rate for site

Release rate			
Allowable release rate (5-yr)	87.3	l/s	*Section B.1.1*
Allowable release rate (100-yr)	87.3	l/s	*Section B.1.1*
Uncontrolled flow (100-yr)	40.2	l/s	*Section B.1.2.1*
Controlled release rate at roof drain (100yr)	8.8	l/s	*Section B.1.2.3*
Controlled release rate main parking area (100-yr)	20.0	l/s	*Section B.1.2.4*
Controlled release rate rear parking area (100-yr)	18.3	l/s	*Section B.1.2.5*
Total release rate (100-yr)	87.3	l/s	
Total release rate (100-yr) < Allowable release rate (5-yr)	OK		

STORM SEWER DESIGN SHEET

LOCATION					CONTRIBUTING AREA								FLOW				STORM SEWER DESIGN									
1	2	3	4	5	6	7	8	9	10	11	12	13	14	15	15	16	18	21	22	23	24	25	26	27	28	29
Note	FROM	TO	AREA ID	SEWER TYPE (Lateral or Trunk)	HARD AREA (A1) (ha)	HARD RUNOFF COEFF. (C1) (--)	SOFT AREA (A2) (ha)	SOFT RUNOFF COEFF. (C2) (--)	TOTAL AREA (A3) (ha)	WEIGHTED RUNOFF COEFF. (C3) (--)	SECTION (A3*C3) (ha)	ACC. SECTION (ha)	TIME OF CONCEN. (Tc) (min)	RAINFALL INTENSITY 5-YR (I) (mm/hr)	RAINFALL INTENSITY 100-YR (I) (mm/hr)	FLOW 5-YR (L/s)	LENGTH (m)	SLOPE (%)	DIA. (mm)	FULL FLOW CAPACITY (L/s)	FULL FLOW vs. ACTUAL FLOW (L/s)	FULL FLOW VELOCITY (m/s)	TIME OF FLOW IN PIPE (min)	TIME OF CONCEN AFT. PIPE (min)	FALL IN PIPE SECTION (m)	COMMENTS
Depressed Entrance	Trench Drain	CBMH03	B6	Lateral	0.01	0.90	0.01	0.20	0.02	0.50	0.012	0.012	10.00	104.193	178.559	3.45	33.0	2.00%	300	136.76	3%	1.93	0.28	10.28	0.66	
Parking Lot	CBMH03	CBMH02	B5	Trunk	0.05	0.90	0.03	0.20	0.08	0.63	0.050	0.062	10.00	104.193	178.559	17.84	24.0	0.50%	300	68.38	26%	0.97	0.41	10.41	0.12	
Parking Lot	CBMH02	CBMH01	B4	Trunk	0.02	0.90	0.03	0.20	0.05	0.50	0.024	0.086	10.00	104.193	178.559	24.77	21.5	0.50%	300	68.38	36%	0.97	0.37	10.37	0.11	
Parking Lot	CBMH-1	STMH01	B3	Trunk	0.02	0.90	0.01	0.20	0.03	0.65	0.017	0.103	10.00	104.193	178.559	18.30	47.0	0.50%	1050	1930.91	1%	2.23	0.35	10.35	0.24	
Parking Lot	**CB01**	STMH01	B1	Lateral	0.20	0.90	0.02	0.20	0.22	0.85	0.187	0.290	10.35	102.373	175.410	20.00	12.5	2.00%	300	136.76	15%	1.93	0.11	10.46	0.25	
Roof Drains	**Building**	STMH01	B2	Lateral	0.27	0.90	0.00	0.20	0.27	0.90	0.243	0.243	10.00	104.193	178.559	8.80	16.5	2.00%	250	84.10	10%	1.71	0.16	10.16	0.33	
	STMH01	OGS01		Trunk								0.636	10.46	101.829	174.469	47.10	3.5	2.00%	300	136.76	34%	1.93	0.03	10.49	0.07	
	OGS01	Mun Conn.		Trunk								**0.636**	**10.49**	**101.678**	**174.208**	**47.100**	17.0	6.32%	300	243.10	19%	3.44	0.08	10.57	1.07	

ICD CONTROL

Notes:
Rainfall Data Source: Ottawa CDA RCS 5 Year
Mannings, n = 0.013

Designed By: W.V
Checked By: A.S

Date: 25/03/25
Revision:

Design Parameters*

Pipe Area Formula:	A = Q/(C(2gh)^0.5))
Pipe Diameter Formula:	A = (pi*d^2)/4 d=sqrt(4*A/pi)

d = Orifice diameter (m)
A = Pipe area (m^2)
C = 0.61
g = 9.81 (m/s^2)
h = head of ponding from the centroid of the pipe invert (m)
Q = Max. flow through pipe (l/s)

CB-1

Elevation at Top of Ponding	Elevation at Pipe Invert	Size of Outlet Pipe	Head from Centroid (h)
(m)	(m)	(mm)	(m)
86.40	84.43	300.0	1.819

Max Flow (Q)	Coeffieicent (C)	g	Head from Centroid (h)	Pipe Area (A)	Orifice Diameter (d)	Orifice Diameter (d)
(l/s)	-	(m/s^2)	(m)	(m^2)	m	mm
20.0	0.61	9.8	1.82	0.005	0.084	84

STMH01

**to be placed before inlet side of STMH-01*

Elevation at Obvert of Oversized Pipe	Elevation of Orifice Invert	Orifice Size	Head from Centroid (h)
(m)	(m)	(mm)	(m)
83.79	82.60	90.0	1.145

Max Flow (Q)	Coeffieicent (C)	g	Head from Centroid (h)	Pipe Area (A)	Orifice Diameter (d)	Orifice Diameter (d)
(l/s)	-	(m/s^2)	(m)	(m^2)	m	mm
18.3	0.61	9.8	1.15	0.006	0.090	90

```
***************************************
** SIMULATION:120% of 100 year storm **
***************************************
----------------------
|Bioretention(  0034)|  OUTFLOW: OFF UNDERDRAIN: ON
|IN= 2--> OUT= 3     |
| DT=  5.0 min       |
----------------------  SURFACE PONDING LAYER:

                        Max. Ponding Storage(cu.m.)=      127.61

                      STAGE        AREA          |   STAGE      AREA
                       (m)        (m2)           |    (m)       (m2)
                      0.000        22.551        |   0.500      564.000
                      0.150        70.304        |   0.550      794.000
                      0.250       104.000        |   0.560      860.000
                      0.400       282.000        |   0.000        0.000
                      0.450       393.000        |   0.000        0.000

                    MULCH LAYER:
                    Depth      (m)=    0.15  Porosity           =  0.20
                    Maximum Mulch layer Volume (cu.m.)=     0.61

                    ENGINEERED SOIL LAYER:
                    Soil moisture =    0.30  Depth            (m)=  0.15
                    Width      (m)=    0.85  Length           (m)= 23.78
                    Porosity      =    0.40  Infiltration (m/hr) = 0.0150
                    Maximum Engineered Soil layer Volume(cu.m.)=    1.21

                    STORAGE LAYER:
                    Depth       (m)=    0.15  Porosity          =  0.40
                    Seepage (m/hr) = 0.0130
                    Maximum Storage layer Volume(cu.m.)=     1.21

                    UNDERDRAIN LAYER:

                      DEPTH       DISCHARGE      |   DEPTH      DISCHARGE
                       (m)          (cms)        |    (m)         (cms)
                      0.000         0.000        |   0.600        0.010
                      0.100         0.002        |   0.700        0.010
                      0.200         0.005        |   0.800        0.011
                      0.300         0.006        |   0.900        0.012
                      0.400         0.007        |   1.000        0.013
                      0.500         0.009        |   0.000        0.000

                    TOTAL AVAILABLE STORAGE:

                    TOTAL STORAGE=Surface Ponding + Mulch Layer + Engineered soil +Storage Layer(cu.m.)=

                    NATIVE SOIL LAYER:
                    Infiltration (m/hr) = 0.0015

                       AREA         QPEAK            TPEAK         R.V.
                       (ha)         (cms)            (hrs)         (mm)
      INFLOW:ID= 2     0.22         0.115             2.33        85.45
  UNDERDRAIN:ID= 4     0.15         0.000             4.42        78.46
    OVERFLOW:ID= 3     0.08         0.019             2.58        78.46

               Volume Reduction Rate[(RVin-RVout)/RVin] (%)=        8.18
               Time to reach Max Ponding storage       (Hr)=        4.33
               Volume of water for drawdown in LID  (cu.m.)=      129.53
               Volume of Max. Water Storage         (cu.m.)=        0.80
               Maximum Surface Ponding And Mulch Vol(cu.m.)=      128.21
               Maximum Engineered Soil Volume       (cu.m.)=        1.21
               Surface Ponding And Mulch Drawdown Time(Hr)=      485.17
               Engineered Soil Drawdown time          (Hr)=      489.75
               Calculated Drawdown Time               (Hr)=      516.00
********************************
** SIMULATION:25mm            **
********************************
----------------------
|Bioretention(  0034)|  OUTFLOW: OFF UNDERDRAIN: ON
|IN= 2--> OUT= 3     |
| DT=  5.0 min       |
----------------------  SURFACE PONDING LAYER:

                        Max. Ponding Storage(cu.m.)=      127.61

                      STAGE        AREA          |   STAGE      AREA
                       (m)        (m2)           |    (m)       (m2)
                      0.000        22.551        |   0.500      564.000
                      0.150        70.304        |   0.550      794.000
                      0.250       104.000        |   0.560      860.000
                      0.400       282.000        |   0.000        0.000
```

```
                         0.450       393.000        |   0.000        0.000

                       MULCH LAYER:
                       Depth      (m)=    0.15  Porosity          =  0.20
                       Maximum Mulch layer Volume (cu.m.)=     0.61

                       ENGINEERED SOIL LAYER:
                       Soil moisture =    0.30  Depth            (m)=  0.15
                       Width      (m)=    0.85  Length           (m)= 23.78
                       Porosity      =    0.40  Infiltration (m/hr) = 0.0150
                       Maximum Engineered Soil layer Volume(cu.m.)=    1.21

                       STORAGE LAYER:
                       Depth       (m)=    0.15  Porosity          =  0.40
                       Seepage (m/hr) = 0.0130
                       Maximum Storage layer Volume(cu.m.)=     1.21

                       UNDERDRAIN LAYER:

                         DEPTH       DISCHARGE      |   DEPTH      DISCHARGE
                          (m)          (cms)        |    (m)         (cms)
                         0.000         0.000        |   0.600        0.010
                         0.100         0.002        |   0.700        0.010
                         0.200         0.005        |   0.800        0.011
                         0.300         0.006        |   0.900        0.012
                         0.400         0.007        |   1.000        0.013
                         0.500         0.009        |   0.000        0.000

                       TOTAL AVAILABLE STORAGE:

                       TOTAL STORAGE=Surface Ponding + Mulch Layer + Engineered soil +Storage Layer(cu.m.)=

                       NATIVE SOIL LAYER:
                       Infiltration (m/hr) = 0.0015

                          AREA         QPEAK            TPEAK          R.V.
                          (ha)         (cms)            (hrs)          (mm)
         INFLOW:ID= 2     0.22         0.011             3.50         18.74
     UNDERDRAIN:ID= 4     0.22         0.000             4.42         16.36
       OVERFLOW:ID= 3     0.00         0.000             0.00          0.00

                  Volume Reduction Rate[(RVin-RVout)/RVin] (%)=       12.70
                  Time to reach Max Ponding storage       (Hr)=        4.33
                  Volume of water for drawdown in LID  (cu.m.)=       41.03
                  Volume of Max. Water Storage        (cu.m.)=        0.80
                  Maximum Surface Ponding And Mulch Vol(cu.m.)=       40.02
                  Maximum Engineered Soil Volume      (cu.m.)=        1.21
                  Surface Ponding And Mulch Drawdown Time(Hr)=      148.42
                  Engineered Soil Drawdown time          (Hr)=      153.00
                  Calculated Drawdown Time               (Hr)=      179.25
***********************************
** SIMULATION:C100-6            **
***********************************
----------------------
|Bioretention(  0034)|  OUTFLOW: OFF UNDERDRAIN: ON
|IN= 2--> OUT= 3     |
| DT=  5.0 min       |
----------------------  SURFACE PONDING LAYER:

                           Max. Ponding Storage(cu.m.)=      127.61

                         STAGE        AREA          |   STAGE      AREA
                          (m)         (m2)          |    (m)       (m2)
                         0.000         22.551       |   0.500      564.000
                         0.150         70.304       |   0.550      794.000
                         0.250        104.000       |   0.560      860.000
                         0.400        282.000       |   0.000        0.000
                         0.450        393.000       |   0.000        0.000

                       MULCH LAYER:
                       Depth      (m)=    0.15  Porosity          =  0.20
                       Maximum Mulch layer Volume (cu.m.)=     0.61

                       ENGINEERED SOIL LAYER:
                       Soil moisture =    0.30  Depth            (m)=  0.15
                       Width      (m)=    0.85  Length           (m)= 23.78
                       Porosity      =    0.40  Infiltration (m/hr) = 0.0150
                       Maximum Engineered Soil layer Volume(cu.m.)=    1.21

                       STORAGE LAYER:
                       Depth       (m)=    0.15  Porosity          =  0.40
                       Seepage (m/hr) = 0.0130
                       Maximum Storage layer Volume(cu.m.)=     1.21
```

```
                    UNDERDRAIN LAYER:

                      DEPTH       DISCHARGE      |   DEPTH      DISCHARGE
                       (m)          (cms)        |    (m)         (cms)
                      0.000         0.000        |   0.600        0.010
                      0.100         0.002        |   0.700        0.010
                      0.200         0.005        |   0.800        0.011
                      0.300         0.006        |   0.900        0.012
                      0.400         0.007        |   1.000        0.013
                      0.500         0.009        |   0.000        0.000

                    TOTAL AVAILABLE STORAGE:

                    TOTAL STORAGE=Surface Ponding + Mulch Layer + Engineered soil +Storage Layer(cu.m.)=

                    NATIVE SOIL LAYER:
                    Infiltration (m/hr) = 0.0015

                       AREA         QPEAK            TPEAK         R.V.
                       (ha)         (cms)            (hrs)         (mm)
      INFLOW:ID= 2     0.22         0.094             2.33        70.01
  UNDERDRAIN:ID= 4     0.18         0.000             4.42        63.03
    OVERFLOW:ID= 3     0.04         0.005             3.25        63.03

               Volume Reduction Rate[(RVin-RVout)/RVin] (%)=        9.96
               Time to reach Max Ponding storage       (Hr)=        4.33
               Volume of water for drawdown in LID  (cu.m.)=      129.52
               Volume of Max. Water Storage         (cu.m.)=        0.80
               Maximum Surface Ponding And Mulch Vol(cu.m.)=      128.21
               Maximum Engineered Soil Volume       (cu.m.)=        1.21
               Surface Ponding And Mulch Drawdown Time(Hr)=      485.17
               Engineered Soil Drawdown time          (Hr)=      489.75
               Calculated Drawdown Time               (Hr)=      516.00
********************************
** SIMULATION:C5-6            **
********************************
----------------------
|Bioretention(  0034)|  OUTFLOW: OFF UNDERDRAIN: ON
|IN= 2--> OUT= 3     |
| DT=  5.0 min       |
----------------------  SURFACE PONDING LAYER:

                        Max. Ponding Storage(cu.m.)=      127.61

                      STAGE        AREA          |   STAGE      AREA
                       (m)        (m2)           |    (m)       (m2)
                      0.000        22.551        |   0.500      564.000
                      0.150        70.304        |   0.550      794.000
                      0.250       104.000        |   0.560      860.000
                      0.400       282.000        |   0.000        0.000
                      0.450       393.000        |   0.000        0.000

                    MULCH LAYER:
                    Depth      (m)=    0.15  Porosity          =  0.20
                    Maximum Mulch layer Volume (cu.m.)=     0.61

                    ENGINEERED SOIL LAYER:
                    Soil moisture =    0.30  Depth            (m)=  0.15
                    Width      (m)=    0.85  Length           (m)= 23.78
                    Porosity      =    0.40  Infiltration (m/hr) = 0.0150
                    Maximum Engineered Soil layer Volume(cu.m.)=    1.21

                    STORAGE LAYER:
                    Depth       (m)=    0.15  Porosity          =  0.40
                    Seepage (m/hr) = 0.0130
                    Maximum Storage layer Volume(cu.m.)=     1.21

                    UNDERDRAIN LAYER:

                      DEPTH       DISCHARGE      |   DEPTH      DISCHARGE
                       (m)          (cms)        |    (m)         (cms)
                      0.000         0.000        |   0.600        0.010
                      0.100         0.002        |   0.700        0.010
                      0.200         0.005        |   0.800        0.011
                      0.300         0.006        |   0.900        0.012
                      0.400         0.007        |   1.000        0.013
                      0.500         0.009        |   0.000        0.000

                    TOTAL AVAILABLE STORAGE:

                    TOTAL STORAGE=Surface Ponding + Mulch Layer + Engineered soil +Storage Layer(cu.m.)=

                    NATIVE SOIL LAYER:
                    Infiltration (m/hr) = 0.0015
```

```
                     AREA         QPEAK            TPEAK         R.V.
                     (ha)         (cms)            (hrs)         (mm)
    INFLOW:ID= 2     0.22         0.033             2.17         39.58
UNDERDRAIN:ID= 4     0.22         0.000             4.42         34.79
  OVERFLOW:ID= 3     0.00         0.000             0.00          0.00

             Volume Reduction Rate[(RVin-RVout)/RVin] (%)=        12.10
             Time to reach Max Ponding storage       (Hr)=         4.33
             Volume of water for drawdown in LID  (cu.m.)=        87.39
             Volume of Max. Water Storage         (cu.m.)=         0.80
             Maximum Surface Ponding And Mulch Vol(cu.m.)=        86.15
             Maximum Engineered Soil Volume       (cu.m.)=         1.21
             Surface Ponding And Mulch Drawdown Time(Hr)=      324.83
             Engineered Soil Drawdown time          (Hr)=      329.42
             Calculated Drawdown Time               (Hr)=      355.67
```

Appendix C - Sanitary Servicing Calculations

MIFO Office Building

Jp2g Consultants Inc.
ENGINEERS · PLANNERS · PROJECT MANAGERS

Appendix C - Sanitary Sewer Design Sheet

C.1.1 - Peak Flow Design Based on Site Area

Definitions
Manning's Coefficient (n) = 0.013

Manning's Formula
$Q = A{*}R^{2/3*}S^{1/2}/n$ (l/s), where
A = Areas in Hectares (ha)
R = Hydraulic Radius (m)
S = Slope

Design Parameters*
1) Average Daily Flow = 280 L/p/day
2) Commercial/Institutional Flow = 28,000 L/ha/day
3) Maximum Residential Peak Factor = 4
4) Commercial/Institutional Peak Factor = 1.50
5) Extraneous Flow = 0.33L/s/ha
6) Minimum Velocity = 0.6 m/s

Designed ZB
Checked DN

Location			Institutional Flow							Infiltration Flow			Total Flow		Sewer Data				
						Cumulative		Average Flow	Peak Flow	Area (ha)		Inf. Flow	Average Flow	Peak Flow	Dia.	Slope	Capacity	Velocity	Utilization
Note	From	To	Area (ha)	Units	Population	Area	Population	(l/s)	(l/s)	Individual	Cumulative	(l/s)	(l/s)	(l/s)	(mm)		(full) (l/s)	(full) (m/s)	(%)
Building	Building	SAMH-1	0.82	NA	NA	0.82	NA	0.27	0.40	0.82	0.82	0.27	0.54	0.67	200	2.00%	46.4	1.5	1.4
Municipal Connection	SAMH-1	Ex. SAMH	0.82	NA	NA	0.82	NA	0.27	0.40	0.82	0.82	0.27	0.54	0.67	200	2.00%	46.4	1.5	1.4

Appendix D - Fire Flow Demand Calculations

MIFO New Building

Appendix D- Fire Flow Demand Requirements

D.1.1 - Fire Flow Demand Requirements (Fire Underwritters Survey (FUS Guidelines))

Fire Flow Formula

Estimated Fire Flow Formula: $F=220*C*A^{1/2}$(L/min)

Designed ZB
Checked AS
Dwg. Reference C1
Jp2g project No 21-5089A

F = Required fire flow (L/min)
C = Coefficient related to the type of construction
$C_{1.5}$ = 1.5 for Type V (Mass Timber) or Type IV-A (Mass Timber)
$C_{1.0}$ = 1.0 for Type III (Ordinary) or Type IV-C (Mass Timber)
$C_{0.9}$ = 0.9 for Type IV-B (Mass Timber)
$C_{0.8}$ = 0.8 for Type IV-A (Mass Timber) or Type II (Noncombustible)
$C_{0.6}$ = 0.6 for Type I (Fire Resistive)
A = Total floor area in square metres

New School Building

Design Parameters*

Type of Building Construction = I (Noncombustible)
Floor Area*** = 2700.0 m²
Occupany and Contents Class Limited combustible
Sprinkler System = Automatic sprinkler system conforming to NFPA standards
Sprinkler Building Coverage = Complete building coverage
Factor of Building Coverage X = 1
Number of Storeys = 3

Exposure Parameters*

	West	North	East	South	
Separation Distance =	over 30m	NA	over 30m	NA	m
Length of Exposed Wall =	NA	NA	NA	NA	m
Length-Height Factor =	NA	NA	NA	NA	m-storeys (up to a maximum of 5-storeys)

				Adjustments (increases or decreases)											
Building Construction	Floor Area***	Coefficient	A	B = A +/- %		C = B x %		D = B x %						Final Adjusted Fire Flow	Final Adjusted Fire Flow
			Fire Flow (F)	Occupancy		Sprinkler		Exposure***							
Type II (Noncombustible)	(m^2)		(L/min)	%	Adjusted Fire Flow(s) (L/min)	%	Fire Adjustment Flow(s) (L/min)	West	North	East	South	Total Exposure	Fire Adjustment Flow(s) (L/min)	E = B - C + D (L/min)"	(L/s)
	8,100.0	0.8	16,000.0	-0.15	13,600.0	50%	6,800.0	0%	0%	0%	0%	0%	0.0	7,000.0	116.7

*Water Supply for Public Protection (Fire Underwriters Survey, 2020).
***Including all stories

Appendix E - Boundary Conditions and Pressure Check

Boundary Conditions
6600 Carrière Street

Provided Information

Scenario	Demand	
	L/min	L/s
Average Daily Demand	16	0.27
Maximum Daily Demand	25	0.41
Peak Hour	44	0.74
Fire Flow Demand #1	7,000	116.67

Location

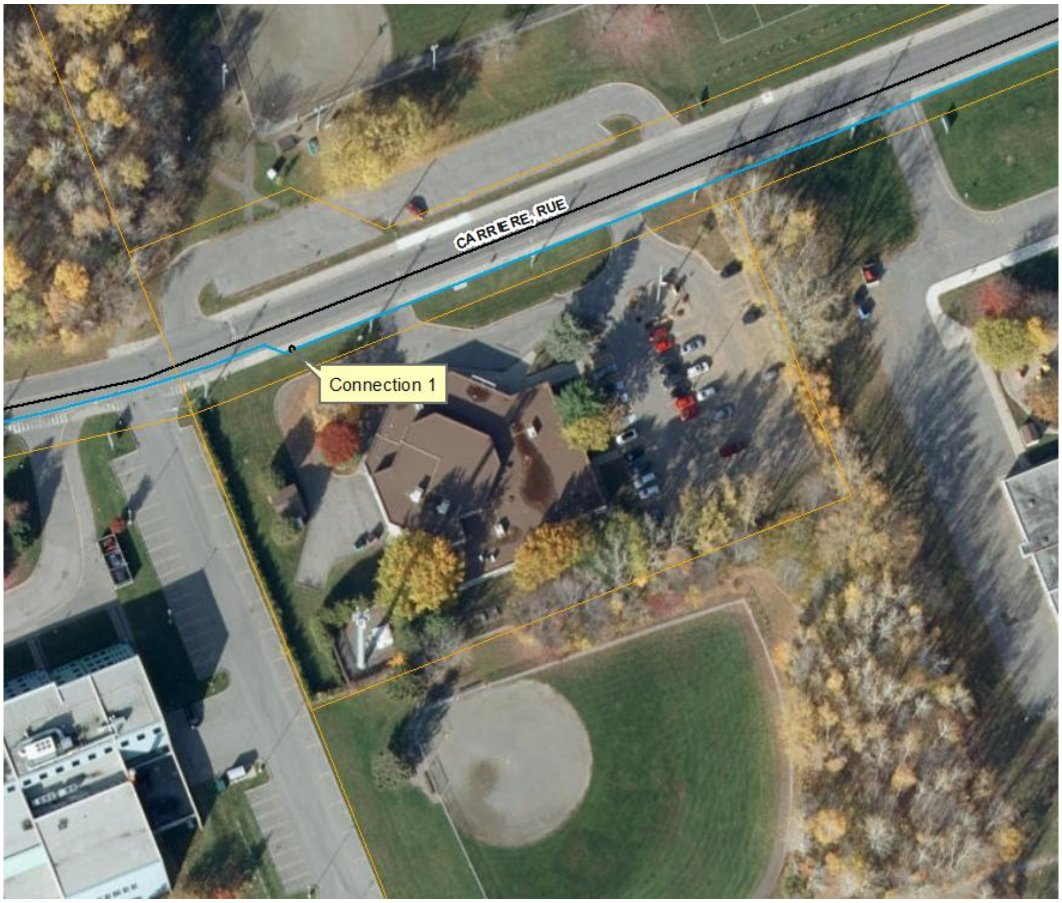

Results

Connection 1 – Carrière St.

Demand Scenario	Head (m)	Pressure[1] (psi)
Maximum HGL	130.3	62.8
Peak Hour	127.3	58.6
Max Day plus Fire 1	115.7	42.0

Ground Elevation = 86.1 m

Disclaimer

The boundary condition information is based on current operation of the city water distribution system. The computer model simulation is based on the best information available at the time. The operation of the water distribution system can change on a regular basis, resulting in a variation in boundary conditions. The physical properties of watermains deteriorate over time, as such must be assumed in the absence of actual field test data. The variation in physical watermain properties can therefore alter the results of the computer model simulation. Fire Flow analysis is a reflection of available flow in the watermain; there may be additional restrictions that occur between the watermain and the hydrant that the model cannot take into account.

D.1.2 - Existing Water Boundary Conditions

Water Demands

Average Daily Demand:	0.27	l/s
Maximum Daily Demand:	0.41	l/s
Maximum Hour Demand:	0.74	l/s
Fire Flow Demand:	116.67	l/s
Maximum Daily + Fire Flow Demand:	117.08	l/s

Design Parameters

Pipe Diameter:	150	mm
Pipe Material:	PVC	
Pipe Length (total network):	74.6	m
Finished Floor Elevation:	87.00	
Pavement (R.O.W.) Elevation:	86.10	

Boundary Conditions

Max. HGL:	130.3	m
Min HGL:	127.3	m
Max. Day + Fire:	115.7	m

Boundary Condition Check

Check water pressure at municipal connection:

Min. HGL - Pavement elevation = 41.20 m
= 58.59 psi*
= 403.93 kPa*

***Normal operating pressure ranges between 345 kPa (50 psi) and 552 kPa (80 psi) under a condition of maximum daily flow as per City of Ottawa Design Guidelines - Water Distribution (Section 4.2.2)**

Pressure at municipal connection OK

Check water pressure at building connection (at max. hour demand):

Min. HGL - Finished floor elevation - Friction Loss** = 40.30 m
= 57.3 psi***
= 395.09 kPa***

****Friction loss calculated using the Hazen-Williams Equation**

*****Under maximum hourly demand conditions the pressures shall not be less than 276 kPa (40 psi) as per City of Ottawa Design Guidelines - Water Distribution (Section 4.2.2)**

Pressure at building connection (at max. hour demand) OK

Hazen-Williams Equation for Pressure Loss in Pipes

SI Units

Specified Data

l = length of pipe (m)	74.62	
c = Hazen-Williams roughness constant	150	
q = volume flow (liter/sec)	0.74	0.00074 m3/s
dh = inside or hydraulic diameter (mm)	150	

Calculated Pressure Loss

f = friction head loss in mm of water per 100 m of pipe (mm H20 per 100 m pipe)	1.66	
f = friction head loss in kPa per 100 m of pipe (kPa per 100 m pipe)	0.02	
Head loss (mm H20)	1.24	**0.001239 METERS**
Head loss (kPa)	0.01	

Calculated Flow Velocity

v = flow velocity (m/s) 0.04

Material	Hazen-Williams Coefficient - *c* -
ABS - Acrylonite Butadiene Styrene	130
Aluminum	130 - 150
Asbestos Cement	140
Asphalt Lining	130 - 140
Brass	130 - 140
Brick sewer	90 - 100
Cast-Iron - new unlined (CIP)	130
Cast-Iron 10 years old	107 - 113
Cast-Iron 20 years old	89 - 100
Cast-Iron 30 years old	75 - 90
Cast-Iron 40 years old	64-83
Cast-Iron, asphalt coated	100
Cast-Iron, cement lined	140
Cast-Iron, bituminous lined	140

Cast-Iron, sea-coated	120
Cast-Iron, wrought plain	100
Cement lining	130 - 140
Concrete	100 - 140
Concrete lined, steel forms	140
Concrete lined, wooden forms	120
Concrete, old	100 - 110
Copper	130 - 140
Corrugated Metal	60
Ductile Iron Pipe (DIP)	140
Ductile Iron, cement lined	120
Fiber	140
Fiber Glass Pipe - FRP	150
Galvanized iron	120
Glass	130
Lead	130 - 140
Metal Pipes - Very to extremely smooth	130 - 140
Plastic	130 - 150
Polyethylene, PE, PEH	140
Polyvinyl chloride, PVC, CPVC	150
Smooth Pipes	140
Steel new unlined	140 - 150
Steel, corrugated	60
Steel, welded and seamless	100
Steel, interior riveted, no projecting rivets	110
Steel, projecting girth and horizontal rivets	100
Steel, vitrified, spiral-riveted	90 - 110
Steel, welded and seamless	100
Tin	130
Vitrified Clay	110
Wrought iron, plain	100
Wooden or Masonry Pipe - Smooth	120
Wood Stave	110 - 120

Appendix F - Pre-Consultation & Development Servicing Study Checklist

Summary of the pre-application consultation meeting held on 9 May 2022.

PLANNING
Evode Rwagasore – Evode.Rwagasore@ottawa.ca

Please refer to related email for submission requirements

TRANSPORTATION
Josiane Gervais – Josiane.Gervais@ottawa.ca

Jenny

- Follow Transportation Impact Assessment Guidelines:
  - Submit a Screening Form at your earliest convenience to josiane.gervais@ottawa.ca. A full Transportation Impact Assessment is required if any of the triggers on the screening form are satisfied.
  - Start this process asap. The application will not be deemed complete until the submission of the draft step 1-4, including the functional draft RMA package (if applicable) and/or monitoring report (if applicable).
  - An update to the *TRANS Trip Generation Manual* has been completed (October 2020). This manual is to be utilized for this TIA. A copy of this document can be provided upon request.
- Clear throat length required is 15m off a collector roadway. Ensure this length is provided. The clear throat length is measured from the ends of the driveway curb return radii at the roadway and the point of first conflict on-site.
- TMP includes Transit Priority Measures (Isolated Measures) along Orleans Blvd (Affordable Network).
- As the proposed site is institutional and for general public use, AODA legislation applies.
  - Ensure all crosswalks located internally on the site provide a TWSI at the depressed curb, per requirements of the Integrated Accessibility Standards Regulation under the AODA.
  - Clearly define accessible parking stalls and ensure they meet AODA standards (include a 1.5m wide access aisle next to the parking stall and a pedestrian curb ramp at the end of the access aisle, as required).
  - Please consider using the City's Accessibility Design Standards, which provide a summary of AODA requirements. https://ottawa.ca/en/city-hall/creating-equal-inclusive-and-diverse-city/accessibility-services/accessibility-design-standards-features#accessibility-design-standards
- As a reduction in parking is being sought, consider providing TDM measures to support this reduction. Measures may include providing Presto passes to staff, increasing bicycle parking, etc.
- On site plan:
  - Ensure site access meets the City's Private Approach Bylaw.
  - Show dimensions for site elements (i.e. lane/aisle widths, access width and throat length, parking stalls, sidewalks, pedestrian pathways, etc.)
  - Show all details of the roads abutting the site up to and including the opposite curb; include such items as pavement markings, accesses and/or sidewalks.
  - Turning movement diagrams required for all accesses showing the largest vehicle to access/egress the site.

    - Turning movement diagrams required for internal movements (loading areas, garbage).
    - Show all curb radii measurements; ensure that all curb radii are reduced as much as possible and fall within TAC guidelines (Figure 8.5.1).
    - Sidewalk is to be continuous across access as per City Specification 7.1.
    - Parking stalls at the end of dead-end parking aisles require adequate turning around space.
- Noise Impact Studies required for the following:
    - Road, as site is on a collector roadway.

Jenny

URBAN DESIGN

Adrian van Wyk – adrian.vanwyk@ottawa.ca

1. PRUD appreciates the detailed design package submitted and the analysis that has informed the evolution of this design.
2. An Urban Design Brief will be required as part of a complete application. Please see the Terms of Reference attached.
3. The requested reduction in the number of parking spaces required should be accompanied by an increase in the number of bicycle spaces provided.
4. The applicant is encouraged to limit the amount of impervious concrete and asphalt as far as possible.
5. The applicant is encouraged to maximize the number of sustainable design features in this proposal where possible (e.g., light coloured reflective materials, tree planting, green roofs, swales, etc.).
6. Additional entrances are recommended on the ground floor facing the internal courtyard and the foyer facing the front amenity area and to ensure these spaces are well activated and an extension of indoor and outdoor space is created.

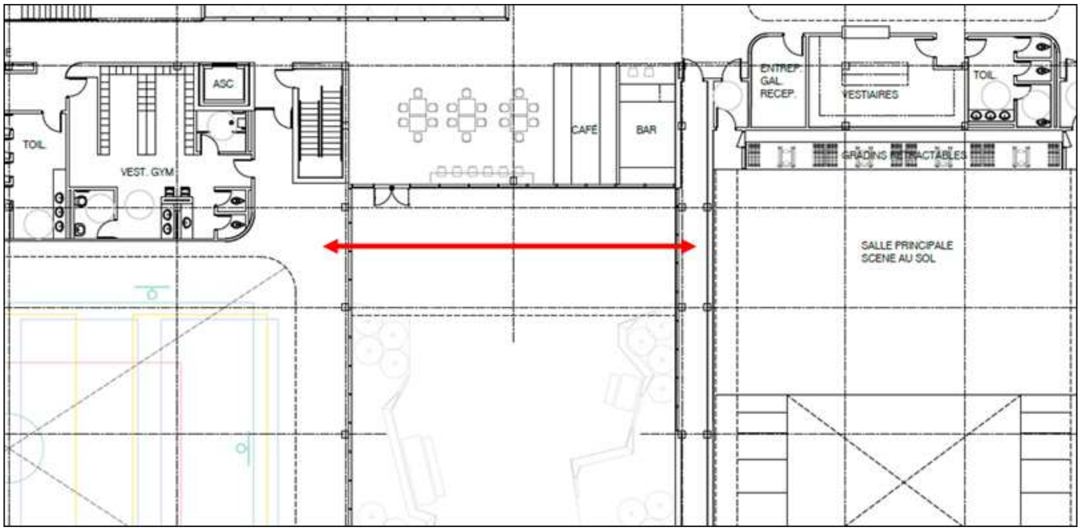

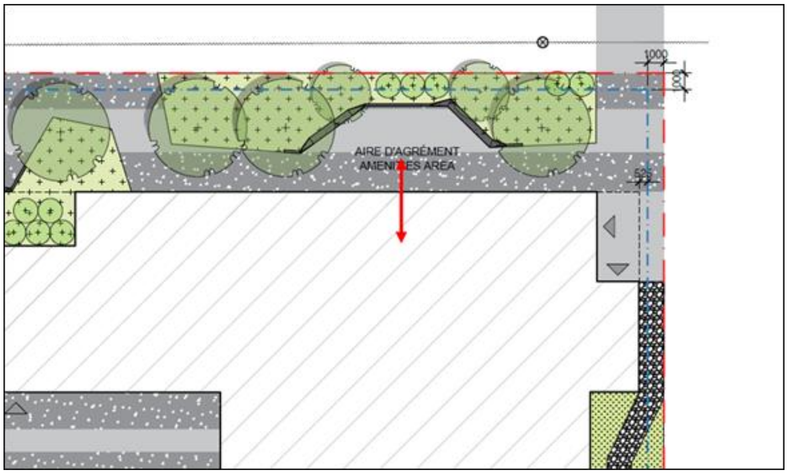
1000
500
AIRE D'AGRÉMENT
AMENITIES AREA

7. Care should be taken to ensure that the east side yard is safe and well lit, and a blank wall condition is avoided on the east façade by breaking it up through variation in colour/material/fenestration.

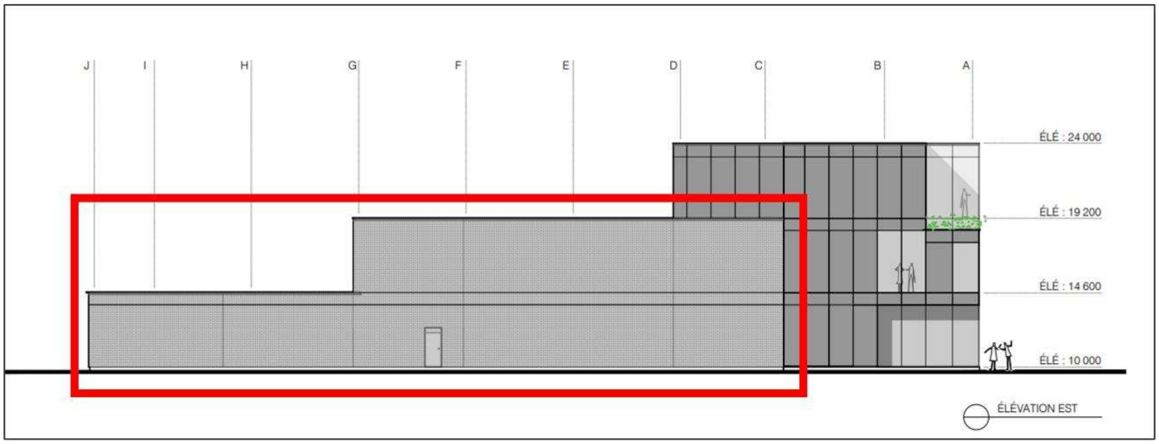
J
I
H
G
F
E
D
C
B
A
ÉLÉ : 24 000
ÉLÉ : 19 200
ÉLÉ : 14 600
ÉLÉ : 10 000
ÉLÉVATION EST

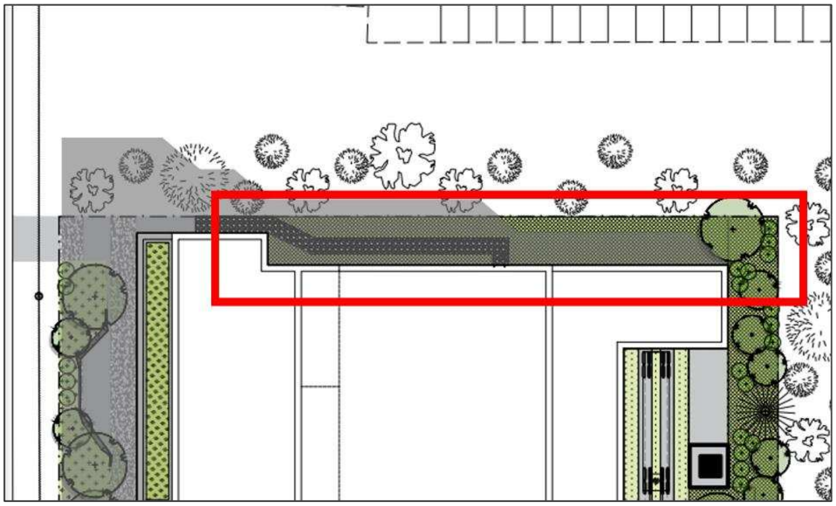

FORESTRY
Mark Richardson – Mark.Richardson@ottawa.ca

1) please submit a TCR with their application and a tree permit is needed prior to any removal
2) please note that all trees on the property line as well as trees on adjacent properties that are close to the property line must be included in the TCR
3) City TCR requirements are sent to you, and include tree planting specifications for the Landscape Plan
3a) please note the minimum ac

not Selma
David to ask Marietta, project. for Forrester

TCR requirements:

1. a Tree Conservation Report (TCR) must be supplied for review along with the suite of other plans/reports required by the City
    a. an approved TCR is a requirement of Site Plan approval.
    b. The TCR may be combined with the LP provided all information is supplied
2. Any removal of privately-owned trees 10cm or larger in diameter, or city-owned trees of any diameter requires a tree permit issued under the Tree Protection Bylaw (Bylaw 2020 – 340); the permit will be based on an approved TCR and made available at or near plan approval.
3. The Planning Forester from Planning and Growth Management as well as foresters from Forestry Services will review the submitted TCR
    a. If tree removal is required, both municipal and privately-owned trees will be addressed in a single permit issued through the Planning Forester
    b. Compensation may be required for city owned trees – if so, it will need to be paid prior to the release of the tree permit
4. the TCR must list all trees on site, as well as off-site trees if the CRZ extends into the developed area, by species, diameter and health condition
5. please identify trees by ownership – private onsite, private on adjoining site, city owned, co-owned (trees on a property line)
6. If trees are to be removed, the TCR must clearly show where they are, and document the reason they cannot be retained
7. All retained trees must be shown, and all retained trees within the area impacted by the development process must be protected as per City guidelines available at Tree Protection Specification or by searching Ottawa.ca
    a. the location of tree protection fencing must be shown on the plan
    b. show the critical root zone of the retained trees
    c. if excavation will occur within the critical root zone, please show the limits of excavation
8. the City encourages the retention of healthy trees; if possible, please seek opportunities for retention of trees that will contribute to the design/function of the site.
9. For more information on the process or help with tree retention options, contact Mark Richardson mark.richardson@ottawa.ca or on City of Ottawa

Selma, 100%

LP tree planting requirements:

For additional information on the following please contact tracy.smith@Ottawa.ca

Minimum Setbacks

- Maintain 1.5m from sidewalk or MUP/cycle track or water service laterals.
- Maintain 2.5m from curb
- Coniferous species require a minimum 4.5m setback from curb, sidewalk or MUP/cycle track/pathway.

from foundations as well

- Maintain 7.5m between large growing trees, and 4m between small growing trees. Park or open space planting should consider 10m spacing, except where otherwise approved in naturalization / afforestation areas. Adhere to Ottawa Hydro's planting guidelines (species and setbacks) when planting around overhead primary conductors.

Tree specifications

- Minimum stock size: 50mm tree caliper for deciduous, 200cm height for coniferous.
- Maximize the use of large deciduous species wherever possible to maximize future canopy coverage
- Tree planting on city property shall be in accordance with the City of Ottawa's Tree Planting Specification; and include watering and warranty as described in the specification (can be provided by Forestry Services).
- Plant native trees whenever possible
- No root barriers, dead-man anchor systems, or planters are permitted.
- No tree stakes unless necessary (and only 1 on the prevailing winds side of the tree)

Hard surface planting

- Curb style planter is highly recommended
- No grates are to be used and if guards are required, City of Ottawa standard (which can be provided) shall be used.
- Trees are to be planted at grade

Soil Volume

- Please document on the Landscape Plan that adequate soil volumes can be met:

Tree Type/Size	Single Tree Soil Volume (m3)	Multiple Tree Soil Volume (m3/tree)
Ornamental	15	9
Columnar	15	9
Small	20	12
Medium	25	15
Large	30	18
Conifer	25	15

Please note that these soil volumes are not applicable in cases with Sensitive Marine Clay.

Sensitive Marine Clay

- Please follow the City's 2017 Tree Planting in Sensitive Marine Clay guidelines

Tree Canopy Cover

- The landscape plan shall show how the proposed tree planting will replace and increase canopy cover on the site over time, to support the City's 40% urban forest canopy cover target.
- At a site level, efforts shall be made to provide as much canopy cover as possible, through tree planting and tree retention, with an aim of 40% canopy cover at 40 years, as appropriate.
- Indicate on the plan the projected future canopy cover at 40 years for the site.

ENGINEERING

Will Curry – William.Curry@ottawa.ca

Submission required:
Site Plan
Topographical Plan of Survey Plan with a published Benchmark
Demolition Plan (include service blanking's at main)
Grading & Drainage Plan
General Plan of Services
Erosion & Sediment Control Plan
Catchment Plan (post)
Design Brief and Stormwater Management Report
Geotechnical Report
TCR & Landscape Plan
Stationary noise Study
Storm Easement to be protected as shown on 5R 08061, Part 2. No planting of Trees in the Easement.
Title Search required based upon Instrument #. It determines what is permitted.

Sometimes combined with Site Servicing Plan

have

by others

Consider Earthbin, Ecoloxia or Molok. Waste subsurface containers.

1. **Minimum Drawing and File Requirements- All Plans**

Plans are to be submitted on standard **A1 size (594mm x 841mm)** sheets, utilizing an appropriate Metric scale (1:200, 1:250, 1:300, 1:400, or 1:500).
Provide individual PDF of the DWGs and for reports please provide one PDF file of the reports.
All PDF documents are to be unlocked and flattened. No reports submitted to be older than 5 years.

SWM Criteria:

? Obtain existing Plans/reports geoinformation@ottawa.ca

Design Criteria - Civil Engineer to contact me directly if need be. william.curry@ottawa.ca

Storm Post to pre, C of .5, post tc 10

Onsite, 2-year pipe minimum and store up to 100-year on site. No surface 2-year ponding on site.

Consider LID on site.

Permissible ponding of 350mm for 100-year. No spilling to adjacent sites (prevent uncontrolled to adjacent sites). At 100-year ponding elevation you must spill to City ROW. 100-year Spill elevation must be 300mm lower than any building opening

*The City reserves the right to make changes to any decisions made herein should new information or data present other information.

ENVIRONMENT
Sami Rehman, Environnemental Planner – Sami.Rehman@ottawa.ca

- no environmental concerns with this proposal, so I don’t think I need to participate.
- you are encourage them to review the City’s Bird-safe Design Guidelines and incorporate bird-safe design elements into their proposal.

Appendix G Roof Drain and ICD Product Data Sheets

Adjustable Accutrol Weir

Tag: ____________________

Adjustable Flow Control for Roof Drains

ADJUSTABLE ACCUTROL (for Large Sump Roof Drains only)

For more flexibility in controlling flow with heads deeper than 2", Watts Drainage offers the Adjustable Accutrol.
The Adjustable Accutrol Weir is designed with a single parabolic opening that can be covered to restrict flow above 2" of head to less than 5 gpm per inch, up to 6" of head. To adjust the flow rate for depths over 2" of head, set the slot in the adjustable upper cone according to the flow rate required. Refer to Table 1 below.
Note: Flow rates are directly proportional to the amount of weir opening that is exposed.

EXAMPLE:

For example, if the adjustable upper cone is set to cover 1/2 of the weir opening, flow rates above 2"of head will be restricted to 2-1/2 gpm per inch of head.

Therefore, at 3"of head, the flow rate through the Accutrol Weir that has 1/2 the slot exposed will be:
[5 gpm (per inch of head) x 2 inches of head] + 2-1/2 gpm (for the third inch of head) = 12-1/2 gpm.

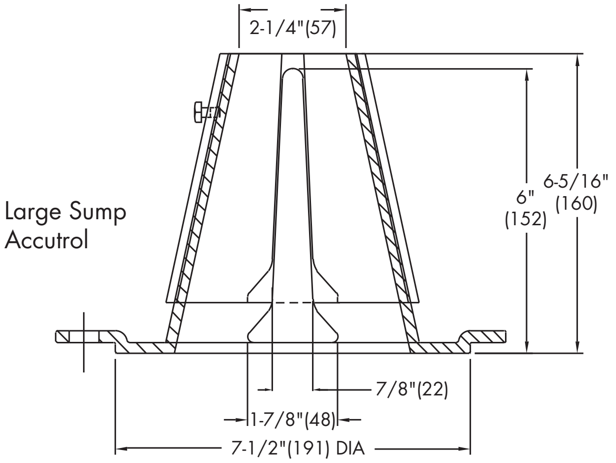

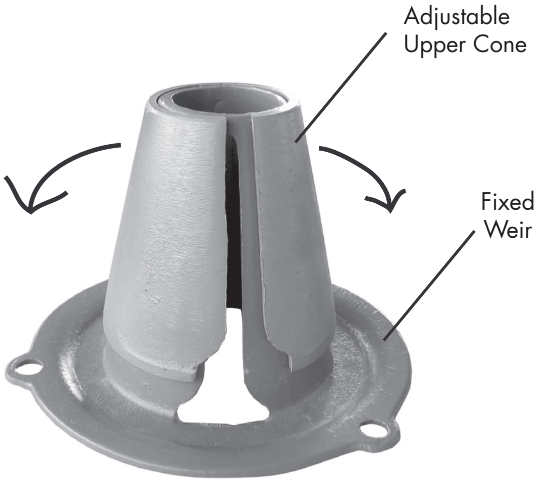

1/2 Weir Opening Exposed Shown Above

TABLE 1. Adjustable Accutrol Flow Rate Settings

Weir Opening Exposed	1"	2"	3"	4"	5"	6"
	Flow Rate (gallons per minute)					
Fully Exposed	5	10	15	20	25	30
3/4	5	10	13.75	17.5	21.25	25
1/2	5	10	12.5	15	17.5	20
1/4	5	10	11.25	12.5	13.75	15
Closed	5	5	5	5	5	5

5 GPM * 28 Roof Drains = 140 GPM @ 6" Head (8.8L/s)

Job Name ____________________

Job Location ____________________

Engineer ____________________

Contractor ____________________

Contractor's P.O. No. ____________________

Representative ____________________

Watts product specifications in U.S. customary units and metric are approximate and are provided for reference only. For precise measurements, please contact Watts Technical Service. Watts reserves the right to change or modify product design, construction, specifications, or materials without prior notice and without incurring any obligation to make such changes and modifications on Watts products previously or subsequently sold.

A Watts Water Technologies Company

© 2016 Watts

Appendix H OGS Data Sheets

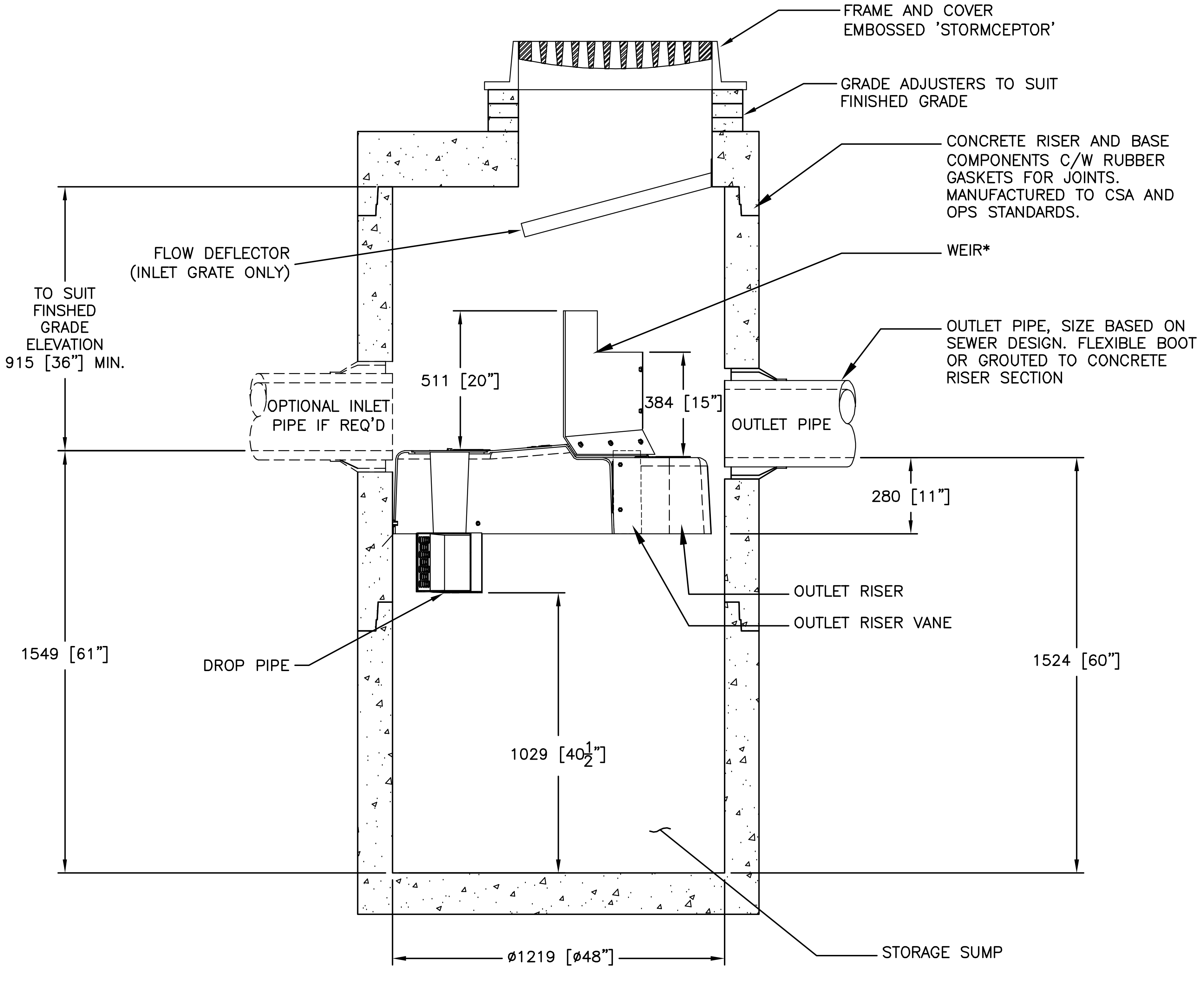
FRAME AND COVER
EMBOSSED 'STORMCEPTOR'
GRADE ADJUSTERS TO SUIT
FINISHED GRADE
CONCRETE RISER AND BASE
COMPONENTS C/W RUBBER
GASKETS FOR JOINTS.
MANUFACTURED TO CSA AND
OPS STANDARDS.
FLOW DEFLECTOR
(INLET GRATE ONLY)
WEIR*
TO SUIT
FINSHED
GRADE
ELEVATION
915 [36"] MIN.
OUTLET PIPE, SIZE BASED ON
SEWER DESIGN. FLEXIBLE BOOT
OR GROUTED TO CONCRETE
RISER SECTION
511 [20"]
384 [15"]
OPTIONAL INLET
PIPE IF REQ'D
OUTLET PIPE
280 [11"]
OUTLET RISER
OUTLET RISER VANE
1549 [61"]
DROP PIPE
1524 [60"]
1029 [40½"]
STORAGE SUMP
ø1219 [ø48"]

SECTION VIEW

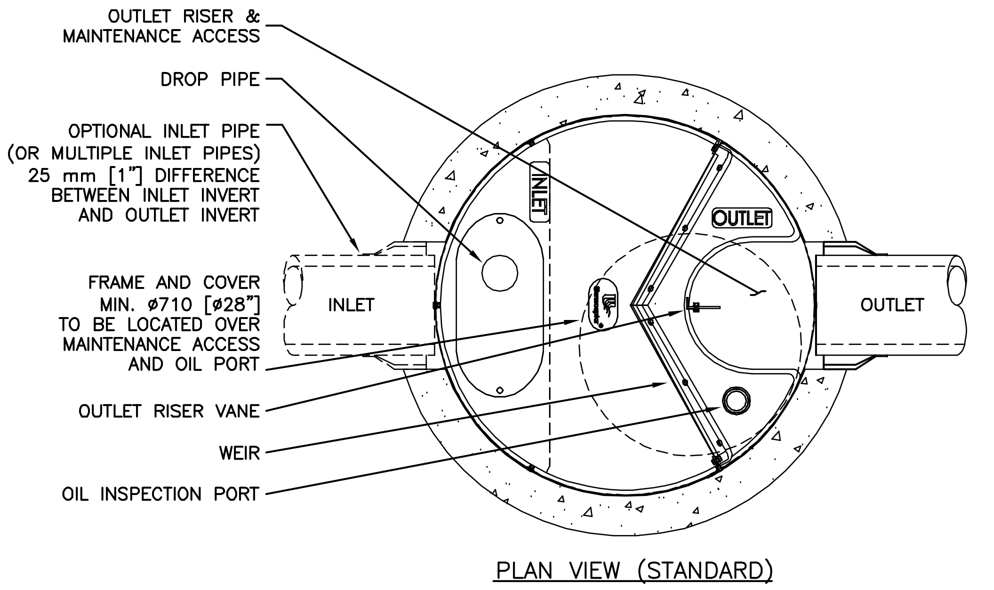
OUTLET RISER &
MAINTENANCE ACCESS
DROP PIPE
OPTIONAL INLET PIPE
(OR MULTIPLE INLET PIPES)
25 mm [1"] DIFFERENCE
BETWEEN INLET INVERT
AND OUTLET INVERT
FRAME AND COVER
MIN. ø710 [ø28"]
TO BE LOCATED OVER
MAINTENANCE ACCESS
AND OIL PORT
OUTLET RISER VANE
WEIR
OIL INSPECTION PORT
INLET
OUTLET
INLET
OUTLET

PLAN VIEW (STANDARD)

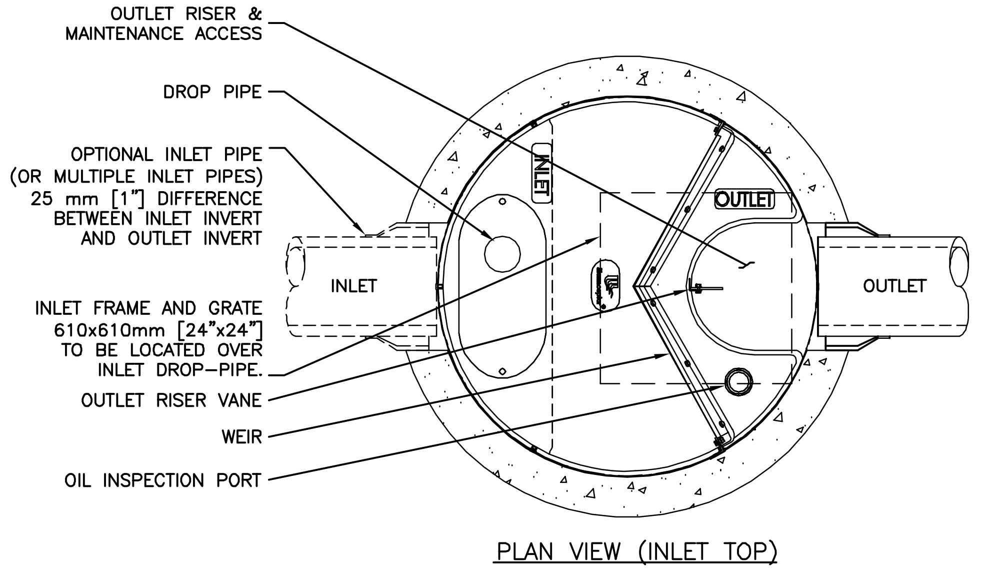
OUTLET RISER &
MAINTENANCE ACCESS
DROP PIPE
OPTIONAL INLET PIPE
(OR MULTIPLE INLET PIPES)
25 mm [1"] DIFFERENCE
BETWEEN INLET INVERT
AND OUTLET INVERT
INLET FRAME AND GRATE
610x610mm [24"x24"]
TO BE LOCATED OVER
INLET DROP–PIPE.
OUTLET RISER VANE
WEIR
OIL INSPECTION PORT
INLET
OUTLET
INLET
OUTLET

PLAN VIEW (INLET TOP)

FOR SITE SPECIFIC DRAWINGS PLEASE CONTACT YOUR LOCAL STORMCEPTOR REPRESENTATIVE. SITE SPECIFIC DRAWINGS ARE BASED ON THE BEST AVAILABLE INFORMATION AT THE TIME. SOME FIELD REVISIONS TO THE SYSTEM LOCATION OR CONNECTION PIPING MAY BE NECESSARY BASED ON AVAILABLE SPACE OR SITE CONFIGURATION REVISIONS. ELEVATIONS SHOULD BE MAINTAINED EXCEPT WHERE NOTED ON BYPASS STRUCTURE (IF REQUIRED).

GENERAL NOTES:

* MAXIMUM SURFACE LOADING RATE (SLR) INTO LOWER CHAMBER THROUGH DROP PIPE IS 1135 L/min/m^2 (27.9 gpm/ft^2) FOR STORMCEPTOR EF4 AND 535 L/min/m^2 (13.1 gpm/ft^2) FOR STORMCEPTOR EFO4 (OIL CAPTURE CONFIGURATION). WEIR HEIGHT IS 150 mm (6 INCH) FOR EF04.

1. ALL DIMENSIONS INDICATED ARE IN MILLIMETERS (INCHES) UNLESS OTHERWISE SPECIFIED.
2. STORMCEPTOR STRUCTURE INLET AND OUTLET PIPE SIZE AND ORIENTATION SHOWN FOR INFORMATIONAL PURPOSES ONLY.
3. UNLESS OTHERWISE NOTED, BYPASS INFRASTRUCTURE, SUCH AS ALL UPSTREAM DIVERSION STRUCTURES, CONNECTING STRUCTURES, OR PIPE CONDUITS CONNECTING TO COMPLETE THE STORMCEPTOR SYSTEM SHALL BE PROVIDED AND ADDRESSED SEPARATELY.
4. DRAWING FOR INFORMATION PURPOSES ONLY. REFER TO ENGINEER'S SITE/UTILITY PLAN FOR STRUCTURE ORIENTATION.
5. NO PRODUCT SUBSTITUTIONS SHALL BE ACCEPTED UNLESS SUBMITTED 10 DAYS PRIOR TO PROJECT BID DATE, OR AS DIRECTED BY THE ENGINEER OF RECORD.

INSTALLATION NOTES

A. ANY SUB-BASE, BACKFILL DEPTH, AND/OR ANTI-FLOTATION PROVISIONS ARE SITE-SPECIFIC DESIGN CONSIDERATIONS AND SHALL BE SPECIFIED BY ENGINEER OF RECORD.
B. CONTRACTOR TO PROVIDE EQUIPMENT WITH SUFFICIENT LIFTING AND REACH CAPACITY TO LIFT AND SET THE STRUCTURE (LIFTING CLUTCHES PROVIDED)
C. CONTRACTOR WILL INSTALL AND LEVEL THE STRUCTURE, SEALING THE JOINTS, LINE ENTRY AND EXIT POINTS (NON-SHRINK GROUT WITH APPROVED WATERSTOP OR FLEXIBLE BOOT)
D. CONTRACTOR TO TAKE APPROPRIATE MEASURES TO PROTECT THE DEVICE FROM CONSTRUCTION-RELATED EROSION RUNOFF.
E. DEVICE ACTIVATION, BY CONTRACTOR, SHALL OCCUR ONLY AFTER SITE HAS BEEN STABILIZED AND THE STORMCEPTOR UNIT IS CLEAN AND FREE OF DEBRIS.

STANDARD DETAIL
NOT FOR CONSTRUCTION

SITE SPECIFIC DATA REQUIREMENTS

STORMCEPTOR MODEL	EF4				
STRUCTURE ID					*
WATER QUALITY FLOW RATE (L/s)					*
PEAK FLOW RATE (L/s)					*
RETURN PERIOD OF PEAK FLOW (yrs)					*
DRAINAGE AREA (HA)					*
DRAINAGE AREA IMPERVIOUSNESS (%)					*
PIPE DATA:	I.E.	MAT'L	DIA	SLOPE %	HGL
INLET #1	*	*	*	*	*
INLET #2	*	*	*	*	*
OUTLET	*	*	*	*	*

* PER ENGINEER OF RECORD

The design and information shown on this drawing is provided as a service to the project owner, engineer and contractor by Imbrium Systems ("Imbrium"). Neither this drawing, nor any part thereof, may be used, reproduced or modified in any manner without the prior written consent of Imbrium. Failure to comply is done at the user's own risk and Imbrium expressly disclaims any liability or responsibility for such use.

If discrepancies between the supplied information upon which the drawing is based and actual field conditions are encountered as site work progresses, these discrepancies must be reported to Imbrium immediately for re-evaluation of the design. Imbrium accepts no liability for designs based on missing, incomplete or inaccurate information supplied by others.

MARK	DATE	REVISION DESCRIPTION	BY
####	####	####	####
####	####	####	####
####	####	####	####
1	6/8/18	UPDATES	JSK
0	5/26/17	INITIAL RELEASE	JSK

Stormceptor® EF

SCALE = NTS

imbrium®

7037 RIDGE ROAD, SUITE 350, HANOVER, MD 21076
USA 888-279-8826 CA 800-566-4801 INTL +1-416-960-990

THE STORMCEPTOR SYSTEM IS PROTECTED BY ONE OR MORE OF THE FOLLOWING PATENTS
Australia Patent No. 693,164 • 707,133 • 729,096 • 779401 | Austrian Patent No. 289,647
| Canadian Patent
No. 2,009,280 • 2,137,942 • 2,175,277 • 2,180,305 • 2,180,383 • 2,206,338 • 2,327,768 |China Patent
No. 1,168,439 | Denmark DK 711,879 | German DE 69,534,021 | Indonesian Patent No 16,688
| Japan Patent No. 9-11476 (Pending) | Korea Patent No. 10-2000-0026101 (Pending)
| Malaysia Patent No. PI9701737 (Pending) | New Zealand Patent No. 314646
| United States Patent No. 4,985,148 • 5,498,331 • 5,725,760; 5,753,115 • 5,849,181 • 6,068,765 • 6,371,690

DATE: 5/26/2017	
DESIGNED: JSK	DRAWN: JSK
CHECKED: BSF	APPROVED: SP
PROJECT No.: EF4	SEQUENCE No.: *
SHEET: 1 OF 1	