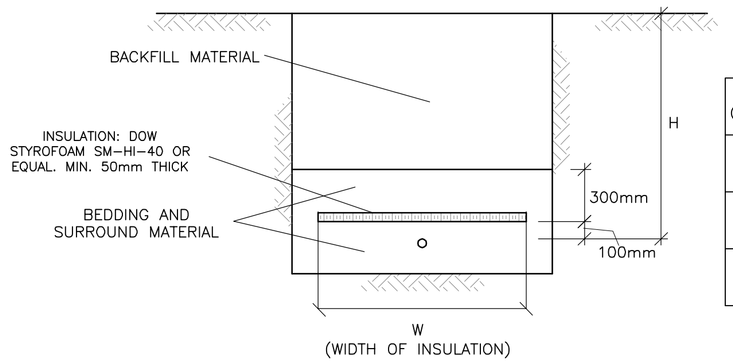

H (DEPTH OF COVER)	INSULATION THICKNESS	W (WIDTH OF INSULATION)
1800 TO 2400mm	50mm	1200mm
1500 TO 1800mm	75mm	1800mm
1200 TO 1500mm	100mm	2400mm

INSULATE SEWER AS INDICATED AND WHERE DEPTH OF COVER COVER IS LESS THAN 2400mm.
PROVIDE A MINIMUM 1200mm COVER.
CENTER INSULATION OVER PIPE.
JOINTS BETWEEN SHEETS OF INSULATION SHALL BE STAGGERED.

INSULATION OF WELL WATER LINE SHALLOW TRENCHES
N.T.S.

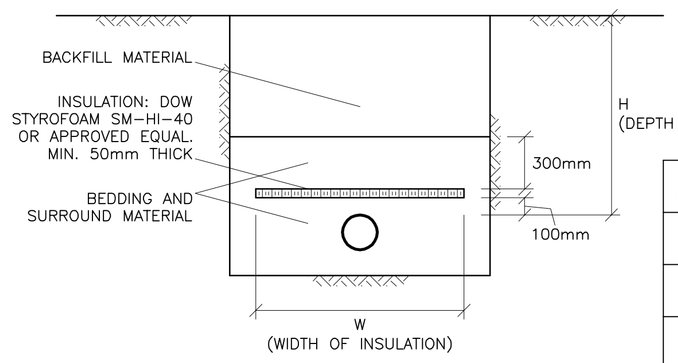

H (DEPTH OF COVER)	INSULATION THICKNESS	W (WIDTH OF INSULATION)
1400 TO 2000mm	50mm	1200mm + DIAMETER OF PIPE
1100 TO 1400mm	75mm	1800mm + DIAMETER OF PIPE
800 TO 1100mm	100mm	2400mm + DIAMETER OF PIPE
500 TO 800mm	125mm	3000mm + DIAMETER OF PIPE

INSULATE SEWER AS INDICATED AND AS PER CITY DRAWING S35 AND WHERE DEPTH OF COVER IS LESS THAN 2000mm.
CENTER INSULATION OVER PIPE.
JOINTS BETWEEN SHEETS OF INSULATION SHALL BE STAGGERED.

INSULATION OF SEWERS IN SHALLOW TRENCHES
AS PER CITY OF OTTAWA DRAWING No. S35
N.T.S

LEGEND

FFL	FIRST FLOOR ELEVATION
TOF	TOP OF FOUNDATION
BFL	BASEMENT FLOOR ELEVATION
USF	UNDERSIDE OF FOOTING
	PROPERTY LINE
CB	CATCH BASIN
MH	STORM MANHOLE
CB/MH	CATCH BASIN/MANHOLE
MH	SANITARY MANHOLE
SAN	SANITARY SEWER
ST	STORM SEWER
WL	WELL WATER LINE
INV	INVERT OF PIPE
RDO	ROOF DRAIN OUTLET
x99.99	EXISTING GRADE ELEVATION

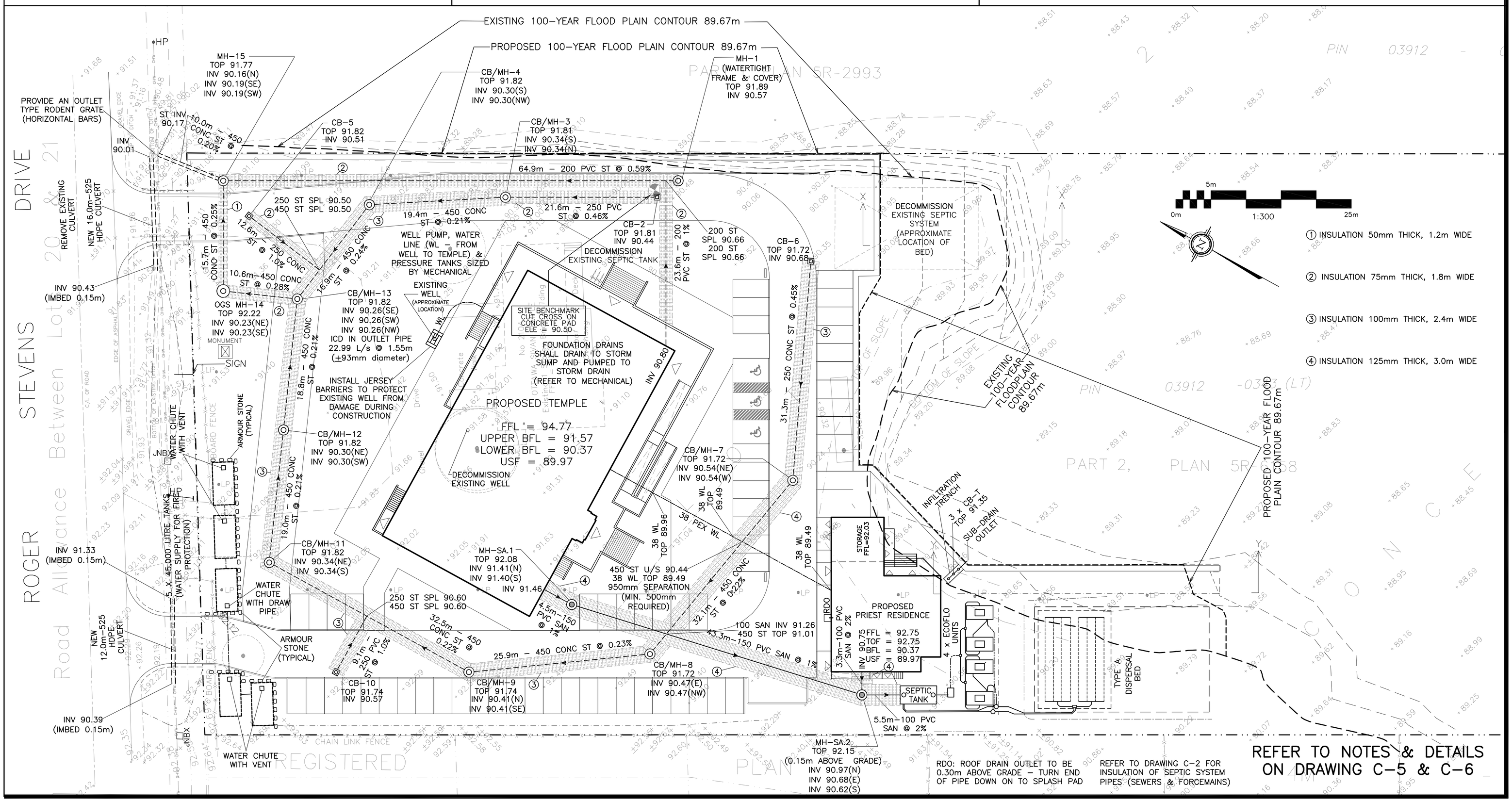

RDO: ROOF DRAIN OUTLET TO BE 0.30m ABOVE GRADE - TURN END OF PIPE DOWN ON TO SPLASH PAD

REFER TO DRAWING C-2 FOR INSULATION OF SEPTIC SYSTEM PIPES (SEWERS & FORCEMAINS)

REFER TO NOTES & DETAILS ON DRAWING C-5 & C-6

KEY PLAN

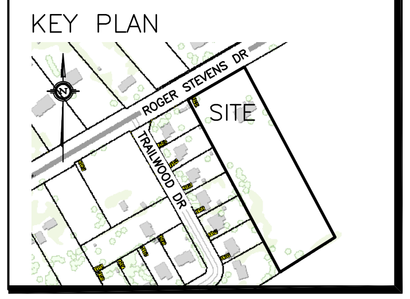

No.	DATE	REVISION
7	APR 10-25	RE-ISSUED FOR APPROVAL
6	OCT 25-24	ISSUED FOR APPROVAL
5	OCT 18-24	ISSUED FOR COORDINATION
4	OCT 15-24	ISSUED FOR COORDINATION
3	SEP 20-24	ISSUED FOR COORDINATION
2	AUG 6-24	ISSUED FOR COORDINATION
1	OCT 23-24	ISSUED FOR APPROVAL

D. B. GRAY ENGINEERING INC.
Stormwater Management - Grading & Drainage - Storm & Sanitary Sewers - Watermains
700 Long Point Circle 613-425-8044
Ottawa, Ontario d.gray@dbgrayengineering.com

Project
PROPOSED HINDU TEMPLE
2104 ROGER STEVENS DR
NORTH GOWER, ONTARIO

Drawing Title
SITE SERVICING PLAN

Engineer's Seal
LICENSED PROFESSIONAL ENGINEER
D.B. GRAY
17016502
APR 10-24
PROVINCE OF ONTARIO
NOT VALID UNLESS SIGNED & DATED

Drawn	D.B.G
H. Scale	1:300
V. Scale	
Date	JUN 11-24
Job No.	20029

Drawing No.
C-1
of 7