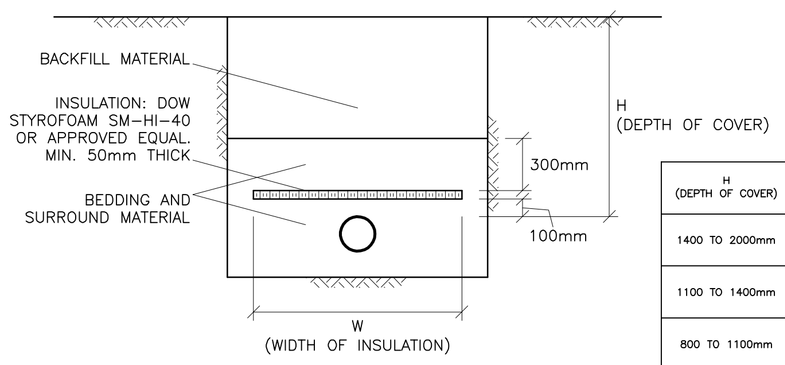

H (DEPTH OF COVER)	INSULATION THICKNESS	W (WIDTH OF INSULATION)
1400 TO 2000mm	50mm	1200mm + DIAMETER OF PIPE
1100 TO 1400mm	75mm	1800mm + DIAMETER OF PIPE
800 TO 1100mm	100mm	2400mm + DIAMETER OF PIPE
500 TO 800mm	125mm	3000mm + DIAMETER OF PIPE

INSULATE SEWER AS INDICATED AND AS PER CITY DRAWING S35 AND WHERE DEPTH OF COVER IS LESS THAN 2000mm. CENTER INSULATION OVER PIPE. JOINTS BETWEEN SHEETS OF INSULATION SHALL BE STAGGERED.

INSULATION OF SEWERS IN SHALLOW TRENCHES
AS PER CITY OF OTTAWA DRAWING No. S35
N.T.S

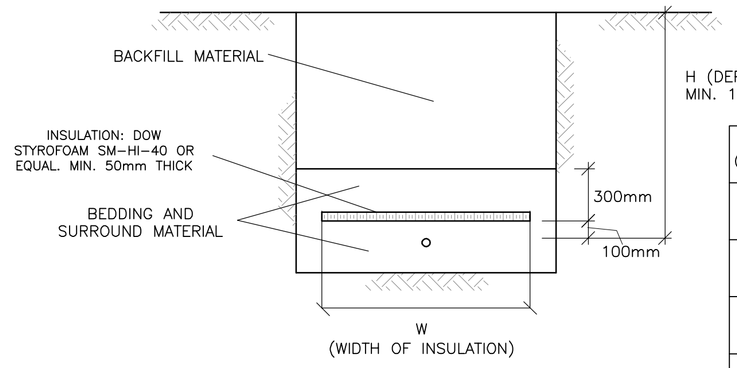

H (DEPTH OF COVER)	INSULATION THICKNESS	W (WIDTH OF INSULATION)
1800 TO 2400mm	50mm	1200mm
1500 TO 1800mm	75mm	1800mm
1200 TO 1500mm	100mm	2400mm
900 TO 1200mm	125mm	3000mm
600 TO 900mm	150mm	3600mm

INSULATE FORCEMAIN AS INDICATED AND WHERE DEPTH OF COVER COVER IS LESS THAN 2400mm CENTER INSULATION OVER PIPE. JOINTS BETWEEN SHEETS OF INSULATION SHALL BE STAGGERED.

INSULATION OF SANITARY FORCEMAIN IN SHALLOW TRENCHES
N.T.S.

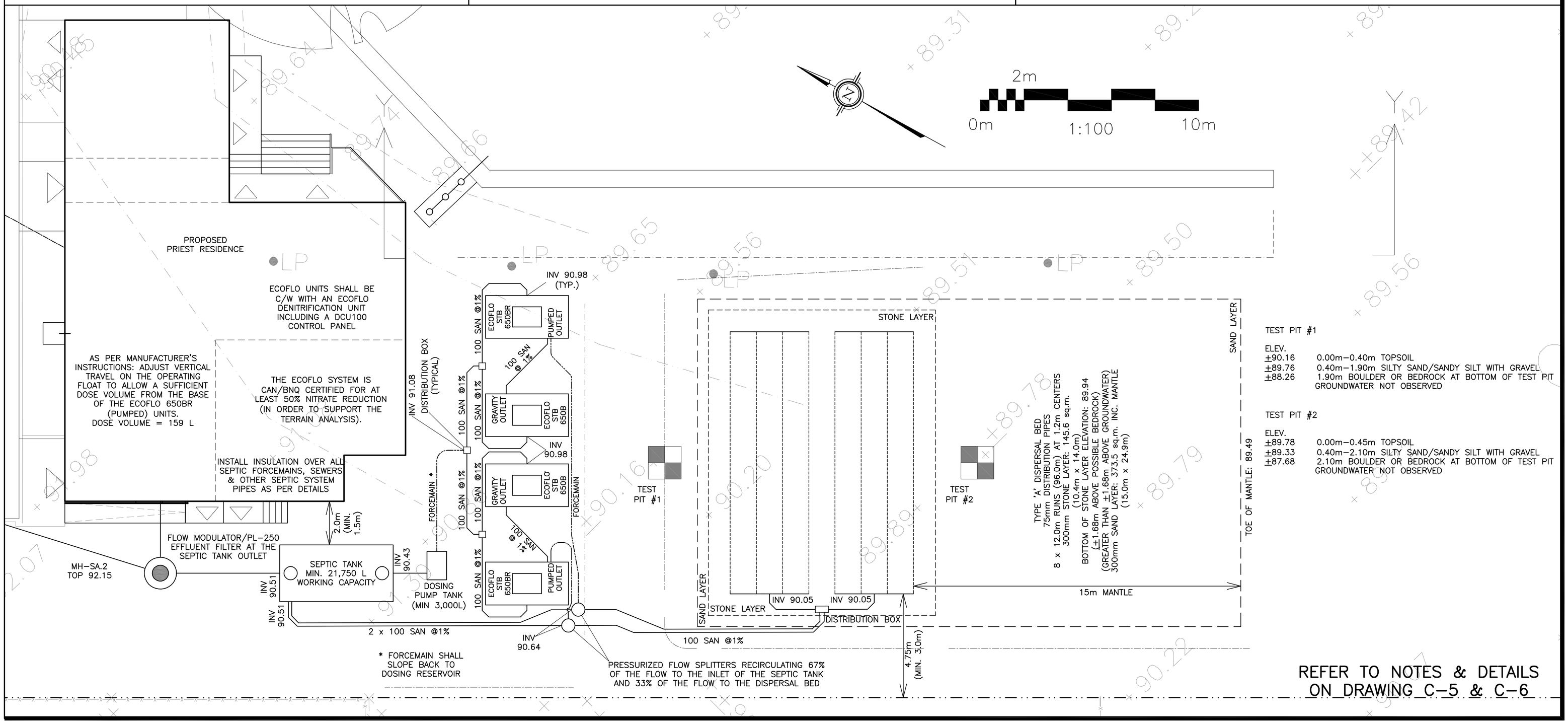

TEST PIT #1

ELEV.
±90.16 0.00m–0.40m TOPSOIL
±89.76 0.40m–1.90m SILTY SAND/SANDY SILT WITH GRAVEL
±88.26 1.90m BOULDER OR BEDROCK AT BOTTOM OF TEST PIT
GROUNDWATER NOT OBSERVED

TEST PIT #2

ELEV.
±89.78 0.00m–0.45m TOPSOIL
±89.33 0.40m–2.10m SILTY SAND/SANDY SILT WITH GRAVEL
±87.68 2.10m BOULDER OR BEDROCK AT BOTTOM OF TEST PIT
GROUNDWATER NOT OBSERVED

REFER TO NOTES & DETAILS ON DRAWING C–5 & C–6

LEGEND

FFL	FIRST FLOOR ELEVATION
TOF	TOP OF FOUNDATION
BFL	BASEMENT FLOOR ELEVATION
USF	UNDERSIDE OF FOOTING
	PROPERTY LINE
CB	CATCH BASIN
MH	STORM MANHOLE
CB/MH	CATCH BASIN/MANHOLE
MH	SANITARY MANHOLE
SAN	SANITARY SEWER
ST	STORM SEWER
WL	WELL WATER LINE
INV	INVERT OF PIPE
RDO	ROOF DRAIN OUTLET
x99.99	EXISTING GRADE ELEVATION

KEY PLAN

No.	DATE	REVISION
9	JUL 23–25	ISSUED TO OSSO FOR SEPTIC PERMIT
8	JUN 12–25	RE-ISSUED FOR APPROVAL & BUILDING PERMIT FOR PRIEST RESIDENCE
7	APR 10–25	RE-ISSUED FOR APPROVAL
6	OCT 25–24	ISSUED FOR APPROVAL
5	OCT 18–24	ISSUED FOR COORDINATION
4	OCT 15–24	ISSUED FOR COORDINATION
3	SEP 20–24	ISSUED FOR COORDINATION
2	AUG 6–24	ISSUED FOR COORDINATION
1	JUL 11–24	PRELIMINARY

D. B. GRAY ENGINEERING INC.
Stormwater Management · Grading & Drainage · Storm & Sanitary Sewers · Watermains
700 Long Point Circle 613-425-8044
Ottawa, Ontario d.gray@dbgrayengineering.com

Project
PROPOSED HINDU TEMPLE
2104 ROGER STEVENS DR
NORTH GOWER, ONTARIO

Drawing Title
SEPTIC SYSTEM

Engineer's Seal
LICENSED PROFESSIONAL ENGINEER
D.B. GRAY
17016502
JUL 23–24
PROVINCE OF ONTARIO
NOT VALID UNLESS SIGNED & DATED

Drawn	D.B.G
H. Scale	1:300
V. Scale	
Date	JUN 11–24
Job No.	20029

Drawing No.
C–2
of 7

Plan #19282 File No. D07–12–25–0049