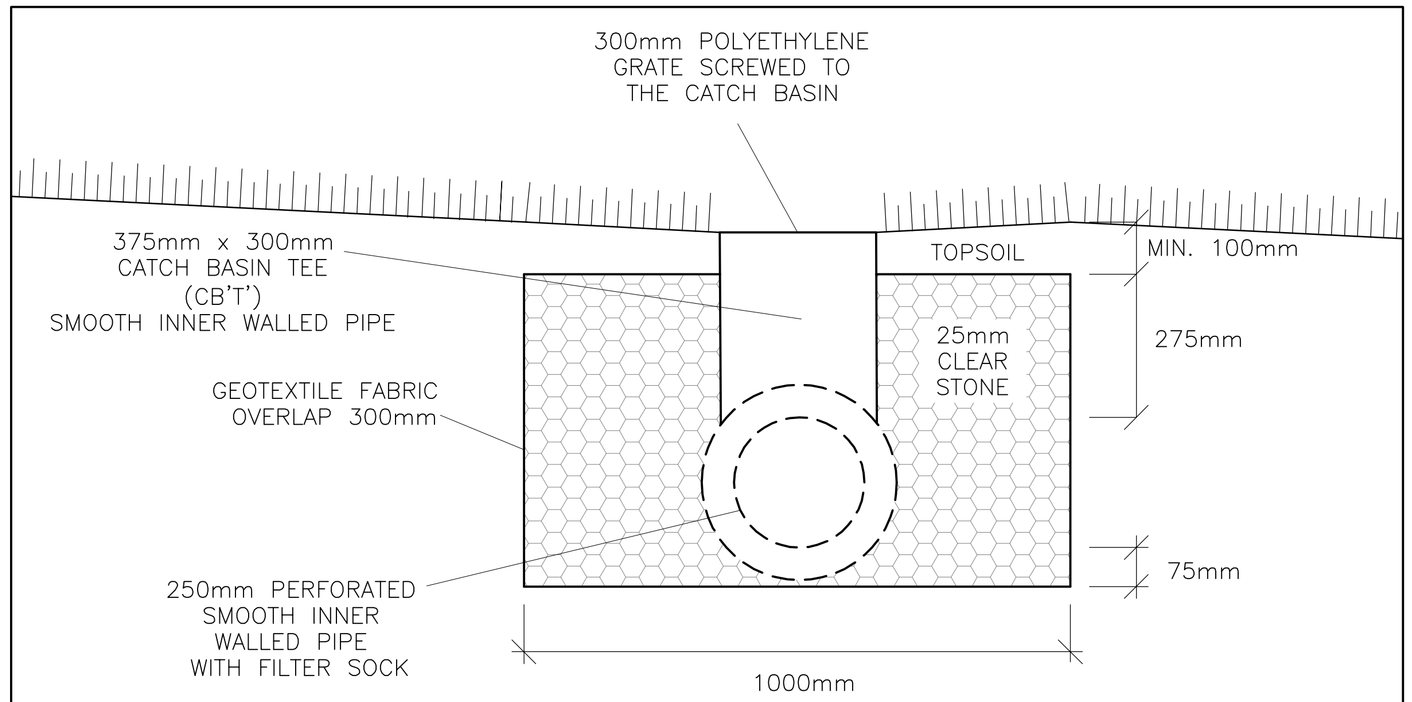

CB–T / TRENCH DRAIN
N.T.S.

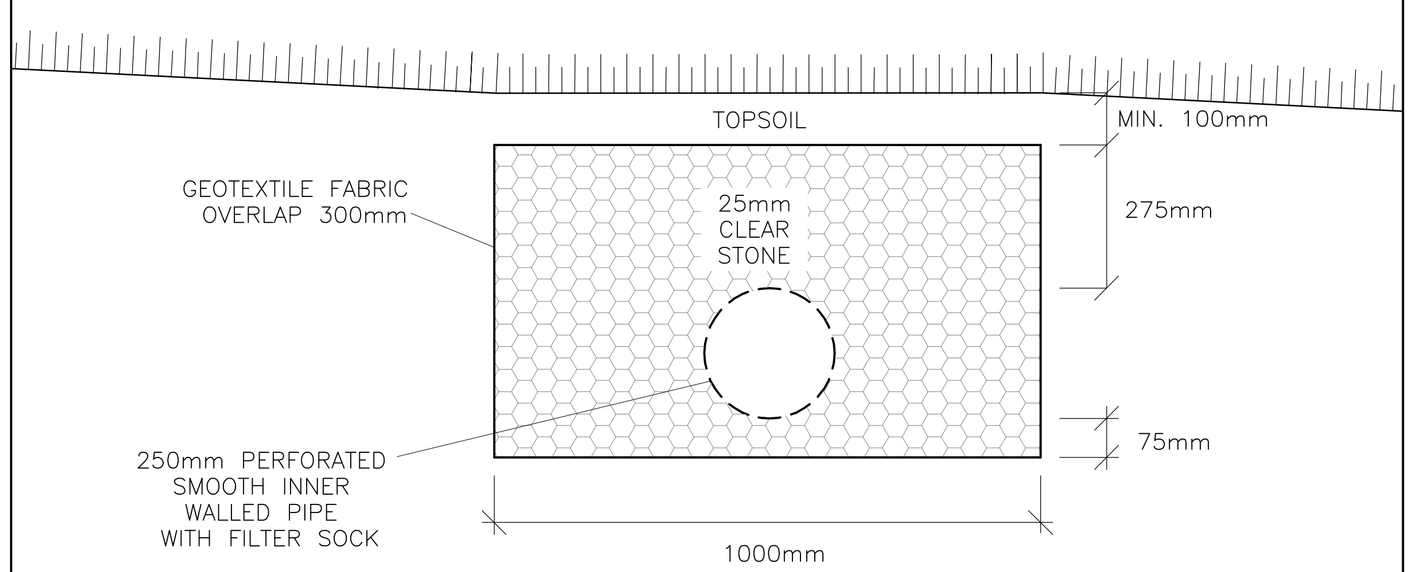

TRENCH DRAIN
N.T.S.

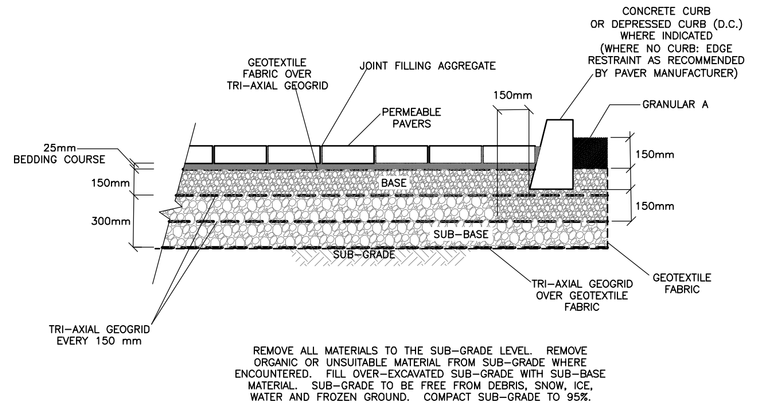

REMOVE ALL MATERIALS TO THE SUB–GRADE LEVEL. REMOVE ORGANIC OR UNSUITABLE MATERIAL FROM SUB–GRADE WHERE ENCOUNTERED. FILL OVER–EXCAVATED SUB–GRADE WITH SUB–BASE MATERIAL. SUB–GRADE TO BE FREE FROM DEBRIS, SNOW, ICE, WATER AND FROZEN GROUND. COMPACT SUB–GRADE TO 95%.

PERMEABLE PAVERS
N.T.S

PERMEABLE PAVERS:
- UNILOCK ECO–PRIORA OR APPROVED EQUAL;
- SHALL BE INTERLOCKING AND SHALL MEET THE MINIMUM MATERIAL AND PHYSICAL PROPERTIES SET FORTH IN CAN 3–A231.2, STANDARD SPECIFICATION FOR PRECAST CONCRETE PAVERS;
- MINIMUM 60 mm PAVER THICKNESS FOR PEDESTRIAN APPLICATIONS;
- MINIMUM 80 mm PAVER; AND
- JOINT WIDTHS SHALL NOT BE GREATER THAN 15 mm.

JOINT FILLING AGGREGATE & 25 mm BEDDING COURSE;
- SHALL MEET ASTM NO. 8 (5 mm DIA.) CLEAR (OPEN–GRADED) CRUSHED AGGREGATE.

GRANULAR BASE:
- CLEAR CRUSHED 20 mm DIAMETER STONE CONFORMING TO ASTM C 33 NO 57; AND
- MINIMUM 150 mm THICKNESS.

GRANULAR SUBBASE:
- CLEAR (OPEN GRADED) CRUSHED STONE 50 MM DIAMETER STONE GRADED IN ACCORDANCE WITH ASTM D 2940; OR
- OPSS GRANULAR O; AND
- MINIMUM 450 mm THICKNESS.

ALL AGGREGATES SHALL MEET THE FOLLOWING CRITERIA:
- MAXIMUM WASH LOSS OF 0.5%;
- MINIMUM DURABILITY INDEX OF 35; AND
- MAXIMUM ABRASION OF 10% FOR 100 REVOLUTIONS AND MAXIMUM OF 50% FOR 500 REVOLUTIONS.

EDGE RESTRAINT:
- A CONCRETE CURB FOR VEHICLE APPLICATIONS.

GEOTEXTILE FABRIC:
- WOVEN MONOFILAMENT OR NON–WOVEN NEEDLE PUNCHED SHALL MEET OPSS 1860 FOR CLASS II GEOTEXTILE FABRICS. SUBGRADE:
- DO NOT COMPACT.
- SCARIFY SUBGRADE IF THE UNDERLYING SOIL HAS AN INFILTRATION RATE OF LESS THAN 15 mm/hr.

PERFORATED SUBDRAIN:
- 100 mm DIAMETER, PERFORATED SUB–DRAINS; HDPE C/W FILTER FABRIC SOCK (BOSS 2000 OR APPROVED EQUAL).
- LOCATE NEAR THE BOTTOM OF THE SUB–BASE LAYER.

REINFORCING GRIDS:
- TRI–AXIAL GEOGRID, UNILOCK DRIVE GRID OR APPROVED EQUAL.
- AT SUB–GRADE LEVEL, EVERY 150 mm IN SUB–BASE, BETWEEN BASE AND SUB–BASE LAYER AND TOP OF BASE LAYER.

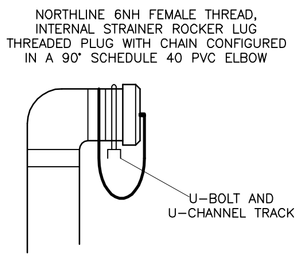

DRAW PIPE
AS PER CITY OF OTTAWA
DRAWING No. W52
N.T.S.

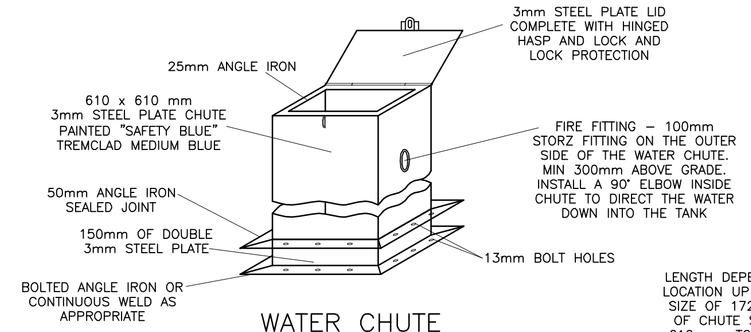

WATER CHUTE
AS PER CITY OF OTTAWA DRAWING No. W51
N.T.S.

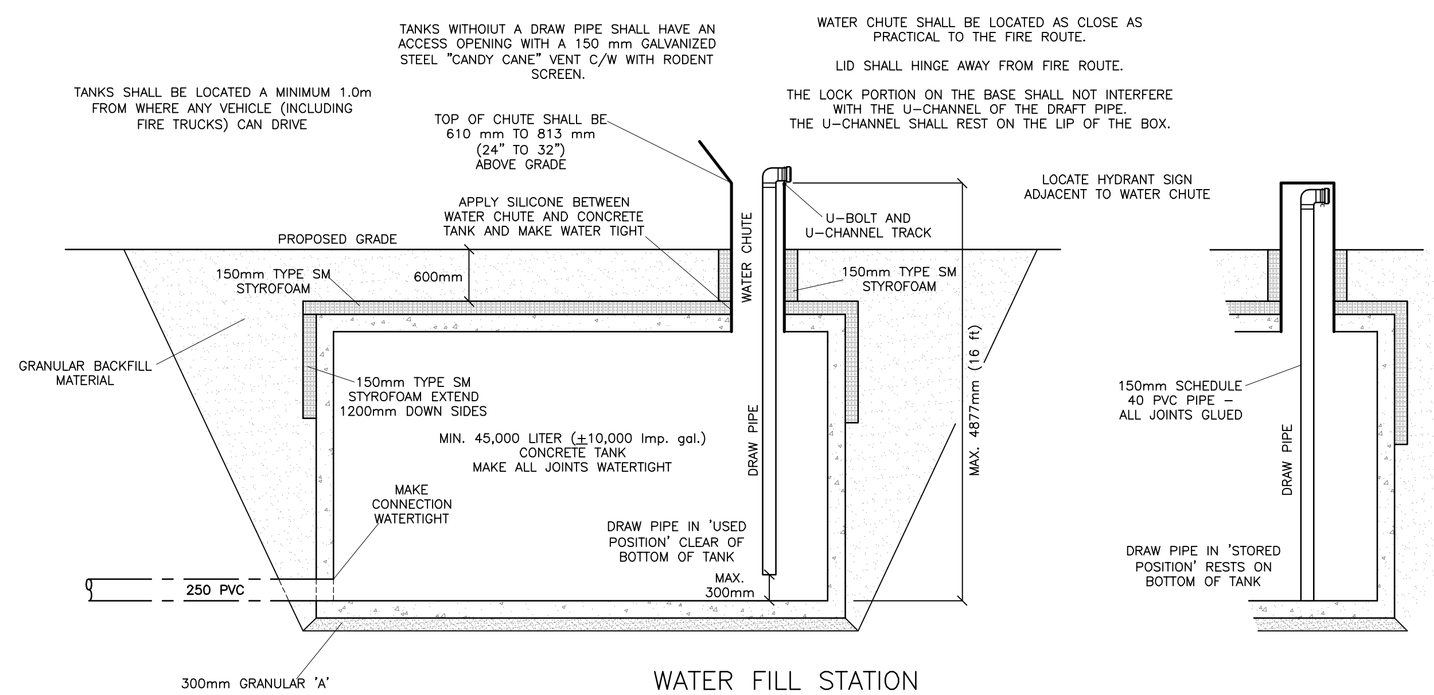

WATER FILL STATION
(WATER SUPPLY FOR FIRE PROTECTION)
AS PER CITY OF OTTAWA DRAWING No. W52
N.T.S.

KEY PLAN

No.	DATE	REVISION
7	APR 10–25	RE–ISSUED FOR APPROVAL
6	OCT 25–24	ISSUED FOR APPROVAL
5	OCT 18–24	ISSUED FOR COORDINATION
4	OCT 15–24	ISSUED FOR COORDINATION
3	SEP 20–24	ISSUED FOR COORDINATION
2	AUG 6–24	ISSUED FOR COORDINATION
1	JUL 11–24	PRELIMINARY

D. B. GRAY ENGINEERING INC.
Stormwater Management · Grading & Drainage · Storm & Sanitary Sewers · Watermains
700 Long Point Circle 613-425-8044
Ottawa, Ontario d.gray@dbgrayengineering.com

Project
PROPOSED HINDU TEMPLE
2104 ROGER STEVENS DR
NORTH GOWER, ONTARIO

Drawing Title
DETAILS

Engineer's Seal
LICENSED PROFESSIONAL ENGINEER
D.B. GRAY
17016502
APR 10–24
PROVINCE OF ONTARIO
NOT VALID UNLESS SIGNED & DATED

Drawn	D.B.G
H. Scale	1:300
V. Scale	
Date	JUN 11–24
Job No.	20029

Drawing No.
C–6
of 7