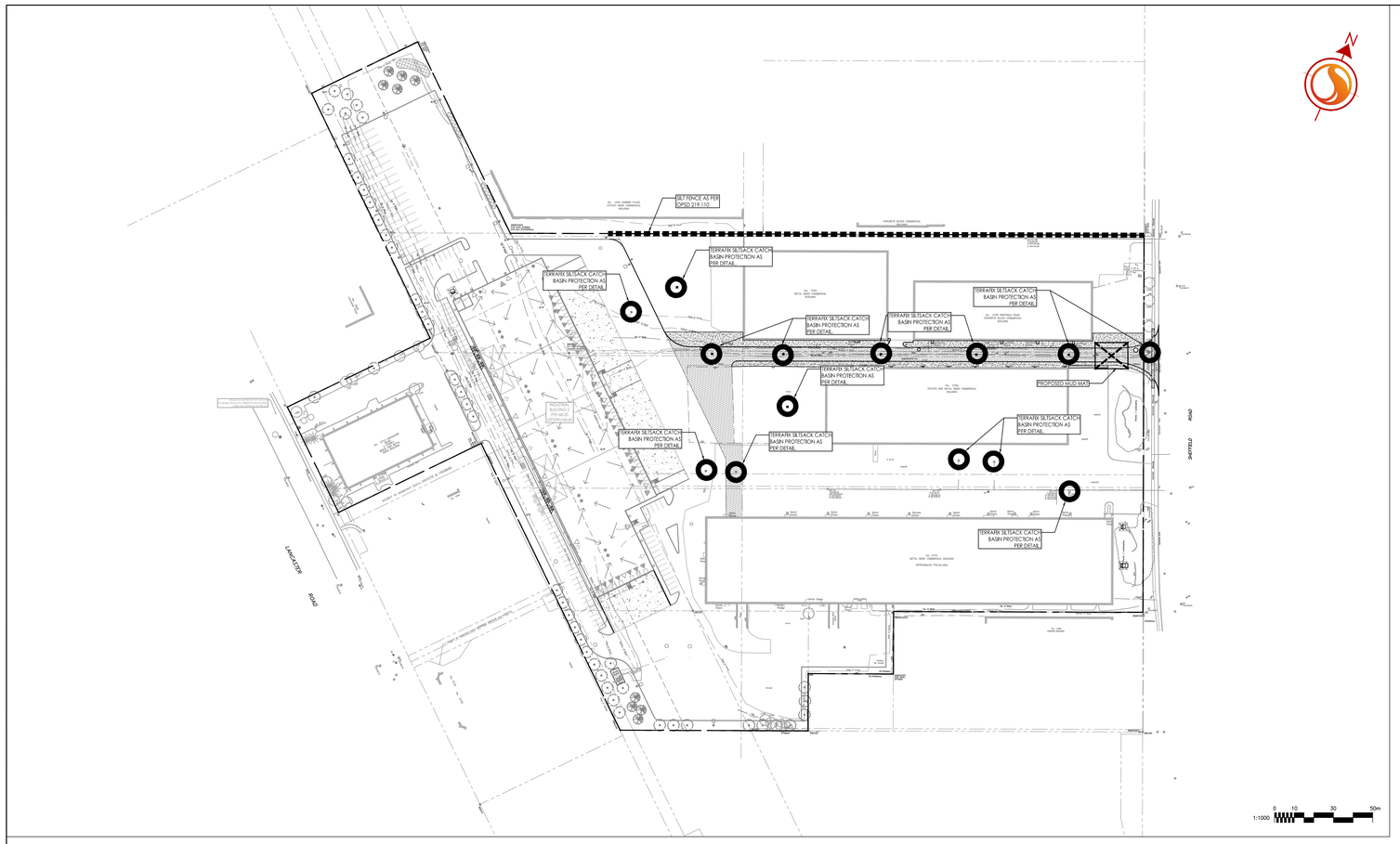

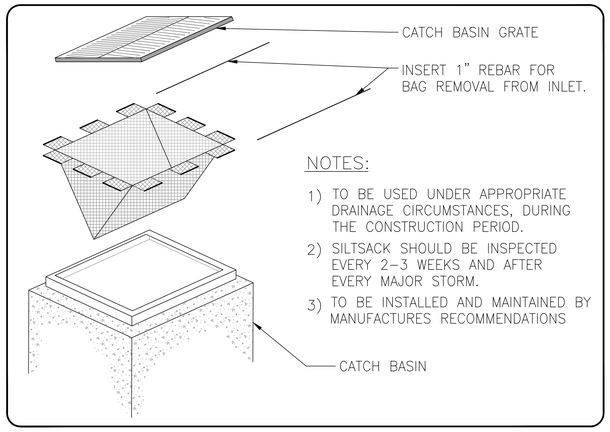

ROADSIDE CATCH BASIN PROTECTION DETAIL: TERRAFIX SILTSACK
SCALE: N.T.S.

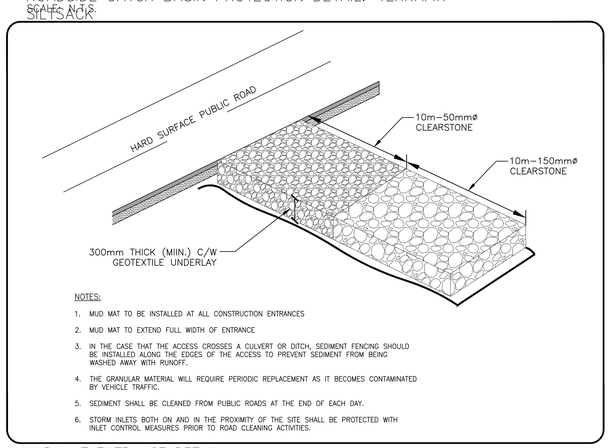

MUD MAT ENTRANCE DETAIL
SCALE: N.T.S.

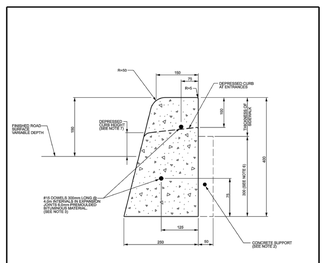

CONCRETE BARRIER CURB

NOTES:
1. THE FULL CURB DEPTH SHALL BE CARRIED THROUGH THE DEPRESSED ACCESS CROSSING.
2. A CONCRETE SUPPORT IS REQUIRED WHEN BUILT ADJACENT TO THE SIDEWALK
3. IF AN EXTRUSION CURBING MACHINE IS USED:
   1. THE EXPANSION BITUMINOUS MATERIAL AND THE #10 DOWELS ARE TO BE PLACED AT THE END OF THE EXTRUSION.
4. ALL DIMENSIONS ARE IN MILLIMETRES UNLESS SHOWN OTHERWISE.
5. DUMMY JOINTS SHALL BE 25mm DEEP, FRONT, BACK AND TOP OF SECTION. AT 4m SPACING OR MATCH JOINTING WHERE SIDEWALK IS ADJACENT.
6. FOR DEPRESSED CURB AT ENTRANCES USE 250.
7. DEPRESSED CURB HEIGHT - FOR PEDESTRIAN CURB RAMPS 0 TO 6 mm AND FOR PRIVATE ENTRANCES 0 TO 13mm.

N.T.S.

Ottawa	CONCRETE BARRIER CURB FOR GRANULAR BASE PAVEMENT (MODIFIED OPSD-600.110)	DATE: JANUARY 2003 / REV. DATE: MARCH 2021	DWG. No.: SC1.1

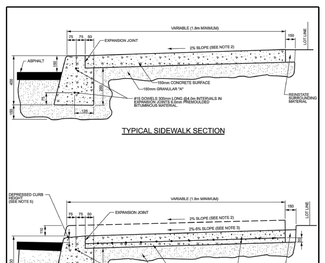

TYPICAL SIDEWALK SECTION

SECTION AT PRIVATE ENTRANCE AND PEDESTRIAN RAMPS

NOTES:
1. ALL DIMENSIONS ARE IN MILLIMETRES UNLESS SHOWN OTHERWISE.
2. THE MAXIMUM SLOPE IS NOT TO EXCEED 2%.
3. FOR CURB RAMPS, SLOPE OF 2% TO 5% MAXIMUM 8%.
4. EXPANSION AND DUMMY JOINTS AS PER SC5.
5. DEPRESSED CURB HEIGHT - FOR PEDESTRIAN CURB RAMPS 0 TO 6 mm AND FOR PRIVATE ENTRANCES 0 TO 13mm.

N.T.S.

Ottawa	CONCRETE BARRIER CURB WITH SIDEWALK	DATE: JANUARY 2003 / REV. DATE: MARCH 2021	DWG. No.: SC1.4

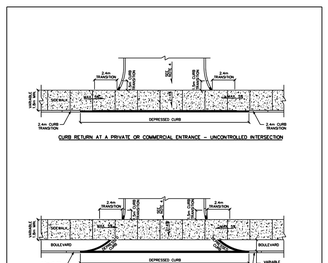

NOTES:
1. ALL DIMENSIONS ARE IN MILLIMETRES UNLESS SHOWN OTHERWISE.
2. CURB DETAILS SEE SC5.1, SC5.2 AND SC1.3.
3. FOR CURB RETURN AT SC1.1 AND SC1.4.
4. MAXIMUM SLOPE VARIES, SEE PRIVATE APPROACH BYLAW
5. UNCONTROLLED INTERSECTION MEANS AN ENTRANCE NOT LOCATED AT A TRAFFIC SIGNAL OR ALL-WAY STOP CONTROL.

N.T.S.

Ottawa	CURB RETURN ENTRANCES UNCONTROLLED INTERSECTIONS	DATE: MARCH 2007 / REV. DATE: MARCH 2021	DWG. No.: SC7.1

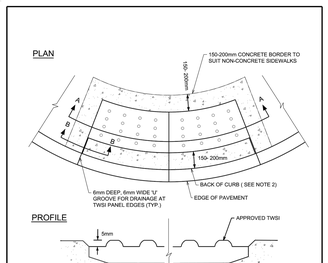

NOTES:
1. TOPS OF TWSI'S (TACTILE WALKING SURFACE INDICATOR) SHALL BE ALIGNED & LEVEL WITH THE ADJACENT CONCRETE SURFACE & INSTALLATION IN WET CONCRETE SHALL BE EFFECTIVE IN PERMANENTLY SECURING THE TWSI IN PLACE ONCE DRY.
2. FOR MONOLITHIC SIDEWALKS, TWSI SHALL BE 300 TO 350mm BACK FROM THE CURB FACE.

N.T.S.

Ottawa	TWSI DETAIL	DATE: MARCH 2016 / REV. DATE: MARCH 2016	DWG. No.: SC7.3

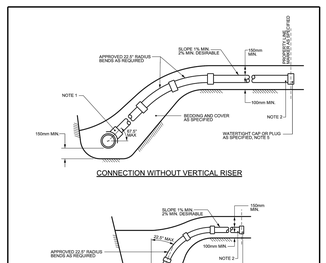

NOTES:
1. ALL DIAMETERS OF SERVICE CONNECTIONS THAT HAVE NOMINAL DIAMETERS NO GREATER THAN 50% OF THE NOMINAL DIAMETER OF THE MAIN SEWER SHALL BE MADE USING A BELL END INSERT AS PER S11.2 OR AN APPROVED RUBBER GASKETED INSERT-MATING SADDLE OR SPIGOT.
2. SANITARY SERVICES TO BE 125mm AND STORM SERVICES TO BE 100mm FOR NEW RESIDENCES UNLESS SPECIFIED OTHERWISE. SERVICE PIPE AND RADIUS BENDS TO BE APPROVED CSA B182.2, SDR28 PRODUCTS UNLESS SPECIFIED OTHERWISE.
3. APPROVED CONTROLLED SETTLEMENT JOINTS OPTIONAL FOR SERVICE CONNECTIONS TO MAIN SEWERS UP TO 5m DEEP. WHERE APPROVED CONNECTIONS TO SEWERS OVER 5m DEEP REQUIRE APPROVED CONTROLLED SETTLEMENT JOINTS.
4. VERTICAL RISER SHALL BE SAME AS SERVICE PIPE UNLESS OTHERWISE SPECIFIED.
5. CAP OR PLUG AT THE PROPERTY LINE SHALL BE ADEQUATELY BRACED TO WITHSTAND TESTING PRESSURE.
6. FOR NEW CONSTRUCTION, INSERTS MUST BE INSTALLED ON THE MAIN PIPE BEFORE THAT PIPE IS LAID. FOR SERVICE/SERVICE REPAIRS 250mm DIA. OR LESS, APPROVED "CORED TEES" MAY BE USED.
7. APPROVED CUT-IN TOOL MUST BE USED FOR FIELD MADE CONNECTIONS.
8. ALL DIMENSIONS ARE IN MILLIMETRES UNLESS OTHERWISE SHOWN.

N.T.S.

Ottawa	SEWER SERVICE CONNECTIONS FOR RIGID MAIN SEWER PIPE (MODIFIED OPSD-1006.010)	DATE: MARCH 2006 / REV. DATE: MARCH 2014	DWG. No.: S11

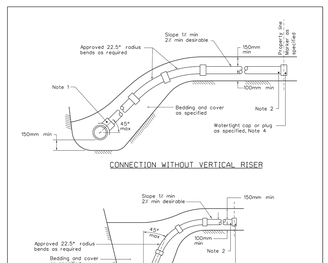

NOTES:
1. ALL DIAMETERS OF SERVICE CONNECTIONS TO FLEXIBLE MAIN SEWER SHALL BE MADE USING APPROVED TEE OR WYE FITTINGS.
2. SANITARY SERVICES TO BE 125mm AND STORM SERVICES TO BE 100mm FOR NEW RESIDENCES UNLESS SPECIFIED OTHERWISE. SERVICE PIPE AND RADIUS BENDS TO BE APPROVED CSA B182.2, SDR28 PRODUCTS UNLESS SPECIFIED OTHERWISE.
3. APPROVED CONTROLLED SETTLEMENT JOINTS OPTIONAL FOR SERVICE CONNECTIONS TO MAIN SEWERS UP TO 5m DEEP. WHERE APPROVED CONNECTIONS TO SEWERS OVER 5m DEEP REQUIRE APPROVED CONTROLLED SETTLEMENT JOINTS.
4. CAP OR PLUG AT THE PROPERTY LINE SHALL BE ADEQUATELY BRACED TO WITHSTAND TESTING PRESSURE.
5. ALL DIMENSIONS ARE IN MILLIMETRES UNLESS OTHERWISE SHOWN.

Ottawa	SEWER SERVICE CONNECTIONS FOR FLEXIBLE MAIN SEWER PIPE (MODIFIED OPSD-1006.020)	DATE: MARCH 2008 / REV. DATE: MARCH 2013	DWG. No.: S11.1

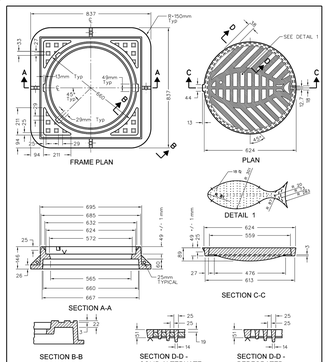

NOTES:
1. ALL DIMENSIONS SHOWN ARE FOR FINISHED CASTINGS ONLY. PATTERN MAKERS AND CASTING SHOP SHOULD MAKE ALLOWANCES ACCORDINGLY.
2. ALL DIMENSIONS ARE IN MILLIMETRES UNLESS SHOWN OTHERWISE.
3. FOR NEW CONSTRUCTION WHERE SURFACE INLETS ARE SPECIFIED.
4. CONFIRMED WITH GRATE DIMENSIONS NOT EXACTLY THE SAME AS SHOWN ABOVE WILL ALSO BE CONSIDERED.
5. ALTERNATE SOLID COVER TO HAVE EYE 25mm Dia.HOLE WITH 25mm APPROVED PLUG

Ottawa	HEAVY DUTY "FISH" TYPE ROUND CATCH BASIN COVER (MODIFIED OPSD-400.07)	DATE: MAY 2005 / REV. DATE: MARCH 2017	DWG. No.: S19

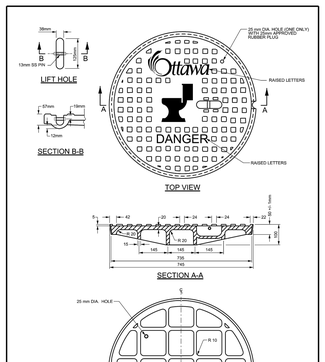

NOTES:
1. PIN TO BE SS.
2. FOR FRAME DETAIL SEE DWG No. S25.
3. ALL DIMENSIONS ARE IN MILLIMETRES UNLESS OTHERWISE SHOWN.

N.T.S.

Ottawa	STANDARD CIRCULAR SANITARY & COMBINED MAINTENANCE HOLE COVER	DATE: MARCH 2008 / REV. DATE: MARCH 2017	DWG. No.: S24

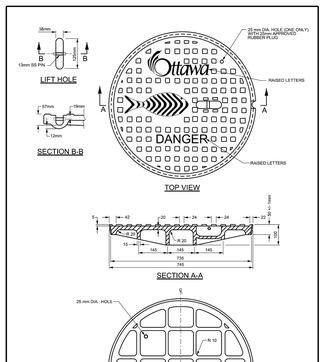

NOTES:
1. PIN TO BE SS.
2. FOR FRAME DETAIL SEE DWG No. S25.
3. ALL DIMENSIONS ARE IN MILLIMETRES UNLESS OTHERWISE SHOWN.

N.T.S.

Ottawa	STANDARD CIRCULAR STORM MAINTENANCE HOLE COVER	DATE: MARCH 2010 / REV. DATE: MARCH 2017	DWG. No.: S24.1

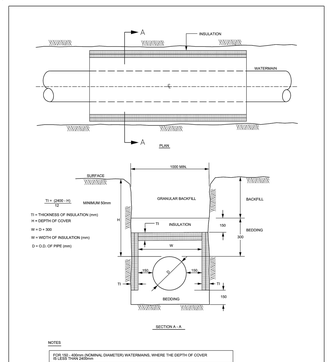

NOTES:
FOR 100 – 400mm (NOMINAL DIAMETER) WATERMAINS, WHERE THE DEPTH OF COVER IS LESS THAN 2400mm
1. INCREMENTS OF THICKNESS SHALL BE ADJUSTABLE TO 25mm.
2. IN PROXIMITY OF MAINTENANCE HOLES, CULVERTS, CATCH-BASINS, ETC., INSULATION SHALL BE PLACED PER DETAIL W23.
3. DEPTH OF COVER LESS THAN 1000mm REQUIRES SPECIAL DESIGN
4. STAGGER JOINTS OF MULTIPLE SHEETS.
5. ALL DIMENSIONS ARE IN MILLIMETRES UNLESS SHOWN OTHERWISE.

Ottawa	THERMAL INSULATION FOR WATERMAINS IN SHALLOW TRENCHES	DATE: MAY 2001 / REV. DATE: MARCH 2013	DWG. No.: W22

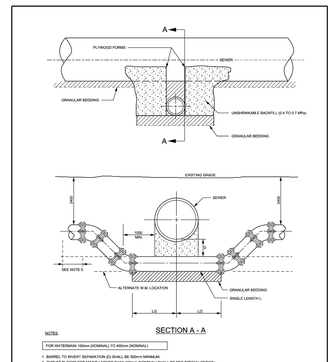

NOTES:
FOR WATERMAIN 100mm (NOMINAL) TO 400mm (NOMINAL)
1. BARREL TO WAVEFIT SEPARATION (2) SHALL BE 500mm MINIMUM.
2. THRUST BLOCKS FOR MAINS LARGER THAN 400mm (NOMINAL) SHALL BE PER SPECIAL DESIGN.
3. FOR 300mm (NOMINAL) AND 400mm (NOMINAL) MAINS, BENDS SHALL BE MAX. 22.5°.
4. CONCRETE FOR THRUST BLOCKS SHALL BE 20 MPa.
5. REFER TO W23 & FOR RESTRAINED LENGTH REQUIREMENTS.
6. REFER TO W23 & FOR THRUST BLOCK SIZE REQUIREMENTS.
7. ALL DIMENSIONS ARE IN MILLIMETRES UNLESS SHOWN OTHERWISE.
8. DESIGNED TO MEET THE INTENT OF THE MOE WATERMAIN DESIGN CRITERIA JUNE 2012.

Ottawa	WATERMAIN CROSSING BELOW SEWER	DATE: MAY 2001 / REV. DATE: MARCH 2013	DWG. No.: W25

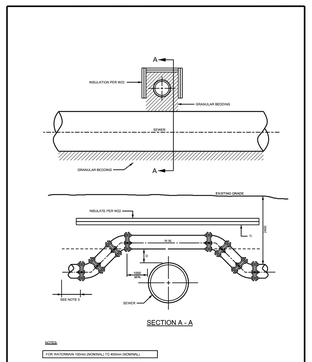

NOTES:
FOR WATERMAIN 100mm (NOMINAL) TO 400mm (NOMINAL)
1. BARREL TO WAVEFIT SEPARATION (2) SHALL BE 250mm MINIMUM.
2. THRUST BLOCKS FOR MAINS LARGER THAN 400mm (NOMINAL) SHALL BE PER SPECIAL DESIGN.
3. FOR 300mm (NOMINAL) AND 400mm (NOMINAL) MAINS, BENDS SHALL BE MAX. 22.5°.
4. CONCRETE FOR THRUST BLOCKS SHALL BE 20 MPa.
5. REFER TO W23 & FOR RESTRAINED LENGTH REQUIREMENTS.
6. REFER TO W23 & FOR THRUST BLOCK SIZE REQUIREMENTS.
7. ALL DIMENSIONS ARE IN MILLIMETRES UNLESS SHOWN OTHERWISE.
8. DESIGNED TO MEET THE INTENT OF THE MOE WATERMAIN DESIGN CRITERIA JUNE 2012.
9. CATCHBASIN PROTECTION MEASURES SHALL BE INSTALLED IN ACCORDANCE WITH W23, W40 AND W42.
10. TRACER WIRE REQUIRED FOR PVC, PE AND HDPE WATERMAINS ONLY AS PER W39.

Ottawa	WATERMAIN CROSSING OVER SEWER	DATE: MAY 2001 / REV. DATE: MARCH 2001	DWG. No.: W25.2

Stantec

Stantec Consulting Ltd.
400 - 1331 Clyde Avenue
Ottawa ON
Tel. 613.722.4420
www.stantec.com

Copyright Reserved

The Contractor shall verify and be responsible for all dimensions. DO NOT scale the drawing – any errors or omissions shall be reported to Stantec without delay.
The Copyrights to all designs and drawings are the property of Stantec. Reproduction or use for any purpose other than that authorized by Stantec is forbidden.

Legend

- PROPOSED SILT FENCE BOUNDARY AS PER OPSD 219.110
- PROPOSED CATCH BASIN PROTECTION AS PER TERRAFIX SILTSACK DETAIL
- PROPOSED MUD MAT LOCATION
- PROPOSED VALVE BOX
- PROPOSED VALVE CHAMBER
- PROPOSED FIRE HYDRANT
- PROPOSED SANITARY SEWER MANHOLE
- PROPOSED STORM SEWER MANHOLE
- PROPOSED CATCHBASIN

Notes

CONTRACTOR TO PROVIDE EROSION AND SEDIMENT CONTROLS (BEST MANAGEMENT PRACTICES) DURING CONSTRUCTION OF THIS PROJECT.

EROSION MUST BE MINIMIZED AND SEDIMENTS MUST BE REMOVED FROM CONSTRUCTION SITE RUN-OFF IN ORDER TO PROTECT DOWNSTREAM AREAS. DURING ALL CONSTRUCTION, EROSION AND SEDIMENTATION SHOULD BE CONTROLLED BY THE FOLLOWING TECHNIQUES:

1. LIMIT THE EXTENT OF EXPOSED SOILS AT ANY GIVEN TIME.
2. REVEGETATE EXPOSED AREAS AND SLOPES AS SOON AS POSSIBLE.
3. MINIMIZE AREA TO BE CLEARED AND GRUBBED.
4. PROTECT EXPOSED SLOPES WITH PLASTIC OR SYNTHETIC MULCHES.
5. INSTALL CATCH BASIN INSERTS OR EQUIVALENT IN ALL PROPOSED CATCH BASINS AND CATCH BASIN MANHOLES AND IN ALL EXISTING CATCH BASINS THAT WILL RECEIVE RUNOFF FROM THE SITE.
6. A SILT FENCE SHALL BE INSTALLED AROUND THE PERIMETER OF ALL AND ANY STOCKPILES OF MATERIAL TO BE USED OR REMOVED FROM SITE. (LOCATION TO BE DETERMINED)
7. A VISUAL INSPECTION SHALL BE DONE DAILY ON SEDIMENT CONTROL MEASURES AND CLEANED OF ANY ACCUMULATED SILT AS REQUIRED. THE DEPOSITS WILL BE DISPOSED OFF SITE AS PER THE REQUIREMENTS OF THE CONTRACT.
8. SEDIMENT CONTROL BARRIERS MAY ONLY BE REMOVED TEMPORARILY WITH APPROVAL OF CONTRACT ADMINISTRATOR TO ACCOMMODATE CONSTRUCTION OPERATIONS. ALL AFFECTED BARRIERS MUST BE REINSTATED AT NIGHT WHEN CONSTRUCTION IS COMPLETED. NO REMOVAL WILL OCCUR IF THERE IS A SIGNIFICANT RAINFALL EVENT ANTICIPATED (>10mm) UNLESS A NEW DEVICE HAS BEEN INSTALLED TO PROTECT EXISTING STORM AND SANITARY SEWER SYSTEMS, OR DOWNSTREAM WATERCOURSES.
9. NO REFUELING OR CLEANING OF EQUIPMENT IS PERMITTED NEAR ANY EXISTING WATERWAY.
10. CONTRACTOR SHALL REMOVE SEDIMENT CONTROL MEASURES WHEN, IN THE OPINION OF THE CONTRACT ADMINISTRATOR, THE MEASURE(S) IS NO LONGER REQUIRED. NO CONTROL MEASURES SHALL BE PERMANENTLEY REMOVED WITHOUT PRIOR WRITTEN AUTHORIZATION FROM THE CONTRACT ADMINISTRATOR.
11. THE CONTRACTOR SHALL PERIODICALLY, OR WHEN REQUESTED BY THE CONTRACT ADMINISTRATOR, CLEAN OUT ACCUMULATED SEDIMENTS AS REQUIRED.
12. THE CONTRACTOR SHALL IMMEDIATELY REPORT TO THE ENGINEER ANY ACCIDENTAL DISCHARGES OF SEDIMENT MATERIAL INTO THE WATERCOURSE. APPROPRIATE RESPONSE MEASURES, INCLUDING ANY REPAIRS TO EXISTING CONTROL MEASURES OR THE IMPLEMENTATION OF ADDITIONAL CONTROL MEASURES, SHALL BE CARRIED OUT BY THE CONTRACTOR WITHOUT DELAY.
13. CONTRACTOR SHALL INSTALL MUD MATS AT ENTRANCE TO THE SITE.
14. STORMWATER SWALES TO BE COVERED WITH HYDRO-SEED AND MULCH.

0	ISSUED FOR 1ST SUBMISSION	MJS	DF	25.04.30
Revision		By	Appd.	YY.MM.DD

File Name: 160401916 DB New Access.dwg

MJS	DF	MJS	25.02.18
Dwn.	Chkd.	Dsgn.	YY.MM.DD

Permit-Seal

LICENSED PROFESSIONAL ENGINEER
D.C. THIFFAULT
100186107
2025-04-30
PROVINCE OF ONTARIO

Client/Project

RICHCRAFT

2750 - 2760 SHEFFIELD ROAD
NEW ACCESS ROAD
OTTAWA, ONTARIO

Title

EROSION CONTROL PLAN AND DETAIL SHEET

Project No.	Scale	
160401916		
Drawing No.	Sheet	Revision
ECDS-1	3 of 5	0

W:\active\160401916\design\drawing\160401916 DB New Access.dwg
2025-04-30 9:15 AM By: DIB, Dmitriy

ORIGINAL SHEET - ARCH E