WATER PROFILE TABLE

150mm PVC PRESSURE CLASS 235 DR18

STATION	DESCRIPTION	GRADE ELEVATION	TOP OF PIPE	DEPTH OF COVER	NOTES
A+00.0	CONNECTION TO 600mm MUNICIPAL WATERMAIN	±87.67	±85.64	±2.03	CONNECTION BY CITY EXCAVATION, BACKFILL & REINSTATEMENT BY CONTRACTOR START OF INSULATION 75mm THICK, 1.8m WIDE
A+05.1	22.5° VERTICAL BEND UP	±87.67	85.64	±2.03	–
A+05.8	22.5° VERTICAL BEND DOWN	±87.67	85.93	±1.74	–
A+06.8	–	±87.67	85.93	±1.74	150 WM U/S 85.78 250 SAN TOP ±85.53 250mm CLEARANCE (250mm REQURED)
A+07.8	45° VERTICAL BEND DOWN	±87.67	85.93	±1.74	–
A+08.4	45° VERTICAL BEND UP	87.72	85.32	2.40	END OF INSULATION 75mm THICK, 1.8m WIDE
A+15.0	VALVE & VALVE BOX	87.90	85.32	2.58	–
A+15.6 (B+00.0)	150mm x 150mm TEE	87.92	85.32	2.60	–
A+17.5 (C+00.0)	50mm CONNECTION	87.88	85.32	2.56	–
A+18.0	150mm END CAP	87.87	85.32	2.55	–
B+00.0 (A+15.6)	150mm x 150mm TEE	87.92	85.32	2.60	–
B+01.0	VALVE & VALVE BOX	87.92	85.32	2.60	–
B+05.3	FIRE HYDRANT	88.09	85.32	2.77	–
50mm PEX TUBING TO AWWA C–904 DR9 (CTS)					
C+00.0 (A+17.5)	50mm CONNECTION	87.88	85.32	2.56	–
C+01.0	CURB STOP & SERVICE POST	87.88	85.32	2.56	–
C+04.5	–	88.03	85.48	2.55	START OF 100mm SLEEVE
C+06.7	–	88.03	85.63	2.40	END OF 100mm SLEEVE
C+12.3	–	88.03	85.36	2.67	150 SAN INV 85.66 50 WS TOP 85.36
C+18.8	–	88.07	85.67	2.40	ENTRY TO BUILDING

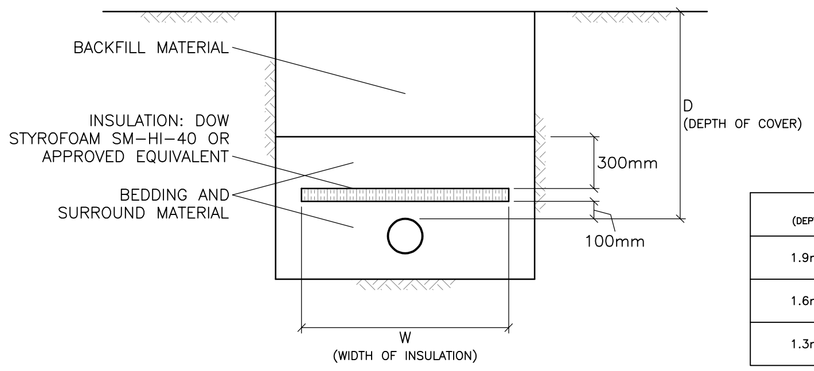

D (DEPTH OF COVER)	INSULATION THICKNESS	W (WIDTH OF INSULATION)
1.9m TO 2.4m	50mm	1.2m
1.6m TO 1.9m	75mm	1.8m
1.3m TO 1.6m	100mm	2.4m

INSULATE WATERMAINS AND WATER SERVICES AS INDICATED AND WHERE DEPTH OF COVER IS LESS THAN 2.4m.
CENTER INSULATION OVER PIPE.
STAGGER JOINTS BETWEEN SHEETS OF INSULATION.

INSULATION OF WATERMAINS & WATER SERVICES IN SHALLOW TRENCHES
N.T.S

CATCH BASIN & MANHOLE SCHEDULE

REF	TOP	SIZE	TYPE	INVERT AT INLET	INVERT AT OUTLET	NOTES
CB–1	87.64	600mm x 600mm	PRECAST CONCRETE CATCH BASIN	–	85.39	IN ACCORDANCE WITH OPSD 705.010 & CITY OF OTTAWA STANDARDS – FRAME & COVER IN ACCORDANCE WITH CITY OF OTTAWA DRAWING No. S19
CI–2	87.71	600mm x 600mm	PRECAST CONCRETE CURB INLET	–	85.27	IN ACCORDANCE WITH OPSD 705.010 & CITY OF OTTAWA STANDARDS – FRAME & COVER IN ACCORDANCE WITH CITY OF OTTAWA DRAWING No. S22 & S23
CBMH–3	87.64	1200mm	PRECAST CONCRETE CATCH BASIN MANHOLE	85.34(S)	85.34(W)	IN ACCORDANCE WITH OPSD 701.010 & CITY OF OTTAWA STANDARDS – FRAME & COVER IN ACCORDANCE WITH CITY OF OTTAWA DRAWING No. S25 & S28.1
CIMH–4	87.69	1200mm	PRECAST CONCRETE CURB INLET MANHOLE	85.16(E)	85.16(SW)	IN ACCORDANCE WITH OPSD 701.010 & CITY OF OTTAWA STANDARDS – FRAME & COVER IN ACCORDANCE WITH CITY OF OTTAWA DRAWING No. S28
CBMH–5	87.57	1200mm	PRECAST CONCRETE CATCH BASIN MANHOLE	85.05(NE)	85.05(SW)	IN ACCORDANCE WITH OPSD 701.010 & CITY OF OTTAWA STANDARDS – FRAME & COVER IN ACCORDANCE WITH CITY OF OTTAWA DRAWING No. S25 & S28.1 ICD IN OUTLET PIPE
MH–6	87.92	CDS PMSU2015–4	PRECAST CONCRETE MANHOLE	84.99(NE)	84.98(SW)	–

KEY PLAN

No.	DATE	REVISION
1	JUL 15–25	ISSUED FOR APPROVAL

D. B. GRAY ENGINEERING INC.
Stormwater Management - Grading & Drainage - Storm & Sanitary Sewers - Watermains
700 Long Point Circle 613-425-8044
Ottawa, Ontario d.gray@dbgrayengineering.com

Project
PROPOSED 2–STOREY MEDICAL FACILITY
4405–4409 INNES ROAD
OTTAWA, ONTARIO

Drawing Title
DETAILS

Engineer's Seal
LICENSED PROFESSIONAL ENGINEER
D.B. GRAY
17016502
JUL 15–25
PROVINCE OF ONTARIO
NOT VALID UNLESS SIGNED & DATED

Drawn	D.B.G
H. Scale	
V. Scale	
Date	JUL 15–25
Job No.	25061

Drawing No.
C–11
of 12