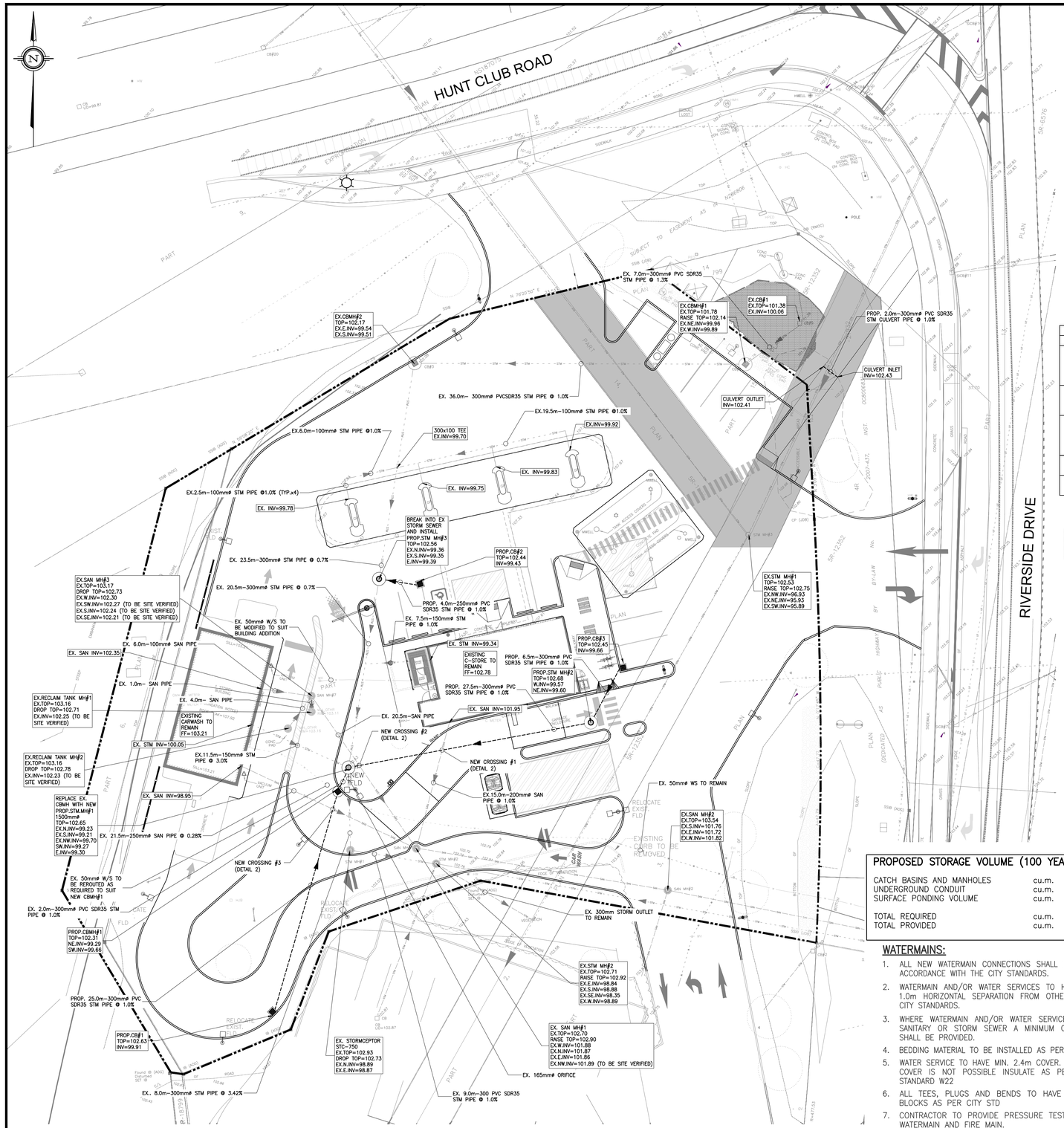

1 SERVICING PLAN
P-301 SCALE: 1:250

STORM SEWER TABLE			
MH/CB ID	TOP ELEVATION (m)	INVERT (m)	DIAMETER (mm)
EX.CB#01	101.38	EX.INV=100.06	300
CB#01	102.63	INV=99.91	300
CB#02	102.44	INV=99.39	250
CB#03	102.45	INV=99.66	300
STM.MH#1 1500mm dia	102.65	EX.N.INV=99.23	300
		EX.S.INV=99.21	165 (Orifice)
		EX.NW.INV=99.7	150
		SW.INV=99.27	300
		E.INV=99.30	300
STM.MH#2	102.68	W.INV=99.57	300
		NE.INV=99.60	300
STM.MH#3	102.56	EX.N.INV=99.36	300
		EX.S.INV=99.35	300
		E.INV=99.39	300
CBMH#01	102.31	N.INV=99.29	300
		S.INV=99.32	300
EX.CBMH#01	EX.=101.78 RAISE TO=102.14	EX.NE.INV=99.96	300
		EX.W.INV=99.89	300
EX.CBMH#02	102.17	EX.E.INV=99.54	300
		EX.S.INV=99.51	300
EX.STC-750	EX.=102.93 DROP TO=102.73	EX.N.INV=98.89	300
		EX.S.INV=98.87	300
EX.STM.MH#1	EX.=102.53 RAISE TO=102.75	EX.NW.INV=96.93	375
		EX.NE.INV=95.93	1350
		EX.SW.INV=95.89	1350
EX.STM.MH#2	EX.=102.71 RAISE TO=102.92	EX.E.INV=98.84	300
		EX.S.INV=98.88	300
		EX.SE.INV=98.35	300
		EX.W.INV=98.89	300

SANITARY SEWER TABLE			
MH ID	TOP ELEVATION (m)	INVERT (m)	DIAMETER (mm)
EX.SAN.MH#01	EX.TOP=102.70 RAISE TO=102.90	EX.W.INV=101.88	250
		EX.N.INV=101.87	150
		EX.NW.INV=101.89 (TO BE SITE VERIFIED)	N/A
EX.SAN.MH#02	EX.TOP=103.54	EX.E.INV=101.86	250
		EX.S.INV=101.76	150
		EX.E.INV=101.72	250
		EX.W.INV=101.82	250
EX.SAN.MH#03	EX.TOP=103.17 DROP TO=102.73	EX.SW.INV=102.27 (TO BE SITE VERIFIED)	N/A
		EX.S.INV=102.24 (TO BE SITE VERIFIED)	N/A
		EX.SE.INV=102.21 (TO BE SITE VERIFIED)	N/A
		EX.W.INV=102.30	100
EX. RECLAIM TANK MH#01	EX.TOP=103.16 DROP TO=102.71	EX.INV=102.25 (TO BE SITE VERIFIED)	N/A
EX. RECLAIM TANK MH#02	EX.TOP=103.16 DROP TO=102.78	EX.INV=102.23 (TO BE SITE VERIFIED)	N/A

CROSSING 1	CROSSING 2	CROSSING 3
NEW STM OBV=99.71	NEW STM OBV=99.61	NEW STM INV=99.67
EXISTING SAN INV=101.92	EXISTING SAN INV=102.06 (TO BE SITE VERIFIED)	EXISTING SAN OBV=99.17
CLEARANCE=2.21m	CLEARANCE=2.45m	CLEARANCE=0.5m

2 NEW CROSSING CLEARANCE
SCALE: NTS

PROPOSED STORAGE VOLUME (100 YEAR EVENT)		
CATCH BASINS AND MANHOLES	cu.m.	33.94
UNDERGROUND CONDUIT	cu.m.	20.62
SURFACE PONDING VOLUME	cu.m.	16.82
TOTAL REQUIRED	cu.m.	55.21
TOTAL PROVIDED	cu.m.	71.38

WATERMAINS:

1. ALL NEW WATERMAIN CONNECTIONS SHALL BE CONSTRUCTED IN ACCORDANCE WITH THE CITY STANDARDS.
2. WATERMAIN AND/OR WATER SERVICES TO HAVE A MINIMUM OF 1.0m HORIZONTAL SEPARATION FROM OTHER UTILITIES AS PER CITY STANDARDS.
3. WHERE WATERMAIN AND/OR WATER SERVICES CROSSES UNDER SANITARY OR STORM SEWER A MINIMUM CLEARANCE OF 0.5m SHALL BE PROVIDED.
4. BEDDING MATERIAL TO BE INSTALLED AS PER CITY STANDARDS.
5. WATER SERVICE TO HAVE MIN. 2.4m COVER. WHERE THE MINIMUM COVER IS NOT POSSIBLE INSULATE AS PER CITY OF OTTAWA STANDARD W22
6. ALL TEES, PLUGS AND BENDS TO HAVE CONCRETE THRUST BLOCKS AS PER CITY STD
7. CONTRACTOR TO PROVIDE PRESSURE TEST RESULTS OF NEW WATERMAIN AND FIRE MAIN.
8. WATERMAIN TO BE INSTALLED WITH TRACER WIRE.

SPECIFICATIONS FOR C.B'S AND M.H.'S

STORM:

1. DROP STRUCTURE IF REQUIRED AS CITY SPECIFICATION AND PER OPSD 1003.010.
2. 600x600 PRECAST CB AS PER OPSD 705.010 c/w FRAME AND GRATE AS PER S19. GOSS TRAP AND SUBDRAINS AS PER CITY STANDARD.1
3. ALL CB TO HAVE 3.0m –150mmø PERFORATED SUBDRAIN IN ALL 4 DIRECTIONS AS PER CITY STANDARDS.
4. 1200ø PRECAST MH AS PER OPSD 701.010 c/w FRAME AS PER S25 AND COVER AS PER S24.1 AND S28.1.
5. BENCHING AS PER OPSD 701.021.
6. BEDDING AS PER CITY STD S6.
7. ADJUSTMENT UNITS AND CAPS AS PER OPSD 704.01.
8. SEWER COVER–GRANULAR 'A' CONFORMING TO OPSD 802.03.
9. PIPE–PVC SDR35 UNLESS NOTED OTHERWISE.
10. CB CONNECTIONS AS PER OPSD 708.03
11. ALL EX. STORM AND SANITARY ABANDONED SHOWN ON THE PLAN OR ENCOUNTERED DURING CONSTRUCTION ARE TO BE EXCAVATED AT THE STREET LINE AND SEALED TO CITY STD.
12. WHEN THE DEPTH OF THE COVER OVER THE PROP. SANITARY OR STORM SEWERS IS LESS THAN 2.0m, SEWER LINES ARE TO BE INSULATED AS PER CITY STD. THE INSULATION TO BE STYROFOAM BRAND H.I. TYPE IV OR EQUAL.
13. DROP STRUCTURE ON STORM OR SANITARY AS PER OPSD 1003.010 OR OPSD 1003.020.AS APPLICABLE

SANITARY

1. 1200ø PRECAST M.H'S AS PER OPSD 701.01 c/w FRAME AS PER S25 AND COVER AS PER S24.
2. DROP STRUCTURE IF REQUIRED AS CITY SPECIFICATION AND PER OPSD 1003.010.
3. BEDDING AS AS PER CITY STD S6.
4. BENCHING AS PER OPSD 701.021.
5. SANITARY PIPES TO BE PVC SDR35.
6. ALL SANITARY SEWERS TO BE TESTED IN ACCORDANCE WITH THE REQUIREMENT OF OBC 7.3.6

EX. INFORMATION NOTES

INFORMATION REGARDING EXISTING STORM, SANITARY AND WATER EXTRACTED FROM PROJECT PART OF LOT 6 CONCESSION 2 DWG #24–10–007–04, DATED 2024–02–26 BY J.D. BARNES LTD AND FROM PROJECT 101048–0 DWG #101048–GP, DATED APRIL 2002 BY NOVATECH ENGINEERING CONSULTANTS LTD.

SERVICES NOTES:

CONTACT LOCAL UTILITY AGENCIES (GAS, HYDRO & TELEPHONE) TO LOCATE THE EXISTING INCOMING SERVICES, AND USE THE SAME TO SERVE NEW INSTALLATIONS (IF APPLICABLE).

SURVEY NOTES

BEARINGS AND MTM GRID, DERIVED BY REAL TIME NETWORK (RTN) OBSERVATIONS, MTM ZONE 9, NAD 83 (CSRS) (2010.0)

DISTANCES ARE GROUND AND CAN BE CONVERTED TO GRID BY MULTIPLYING BY THE COMBINED SCALE FACTOR OF 0.999907

ELEVATIONS SHOWN ON THIS PLAN ARE REFERRED TO GEODETIC DATUM AND ARE DERIVED FROM CITY OF OTTAWA BENCH MARK 00119883075, HAVING PUBLISHED ELEVATION OF 90.612 METRES

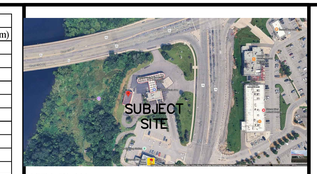

KEY PLAN
NTS

GENERAL NOTES

1. VERIFY ALL DIMENSIONS PRIOR TO CONSTRUCTION.
2. DO NOT SCALE DRAWINGS.
3. REPORT ALL DISCOVERIES OF ERRORS, OMISSIONS OR DISCREPANCIES TO THE DESIGN ENGINEER AS APPLICABLE.
4. USE ONLY LATEST REVISED DRAWINGS OR THOSE THAT ARE MARKED "ISSUED FOR CONSTRUCTION".
5. DESIGN AND CONSTRUCTION OF THIS PROJECT SHALL COMPLY WITH THE PROVINCIAL AND LOCAL BUILDING CODES LATEST EDITION.
6. ALL WORKS AND MATERIALS USED SHALL COMPLY AS REQUIRED BY THE BUILDING CODE LATEST EDITION.
7. THIS DRAWING SHALL BE READ IN CONJUNCTION WITH ALL RELEVANT DRAWINGS & SPECIFICATIONS.
8. EVERYTHING IS TO BE CONSIDERED NEW UNLESS SPECIFIED EXISTING OTHERWISE.

LEGEND

- +100.00 EXISTING ELEVATION
- EXISTING CATCHBASIN
- EXISTING C.B./M.H.
- EXISTING MANHOLE
- NEW CATCHBASIN
- NEW C.B./M.H.
- NEW MANHOLE
- EXISTING STORM LINE
- EXISTING SANITARY LINE
- PROPERTY LINE
- SETBACK LINE
- NEW SANITARY LINE
- NEW STORM LINE
- w NEW WATER LINE

REVISION TABLE			
REV.	DESCRIPTION	DRAWN	APP'D.
		DATE	
0	PRELIMINARY DESIGN	DL	JS
		OCT 17, 2025	
1	1st REVISION AS PER COMMENT	DL	JS
		OCT 24, 2025	
2	2nd REVISION AS PER COMMENT	DL	JS
		OCT 29, 2025	

ISSUE TABLE		
TO	FOR	DATE
SUNCOR	FOR REVIEW	22 OCT '25
SUNCOR	FOR REVIEW	24 OCT '25
SUNCOR	FOR REVIEW	30 OCT '25
CITY	FOR SPA	17 DEC '25

METRIC

ALL DIMENSIONS ARE IN MILLIMETRES U.N.O. CONTRACTOR TO CHECK/VERIFY ALL DIMENSIONS PRIOR TO COMMENCEMENT OF WORK. ALL DESCREPANCIES TO BE REPORTED TO THE PROJECT DESIGNER. DO NOT SCALE DRAWINGS.

SEAL

LICENSED PROFESSIONAL ENGINEER
M. Y. SAM
100127775
DEC 17, 2025
PROVINCE OF ONTARIO

CONSULTANT

J + B ENGINEERING INC.
TORONTO
25 CENTURIAN DR.
SUITE 201
MARKHAM, ON L3R 5N8
416 239 3936
CALGARY
838-11TH AVE. SW
SUITE 200
CALGARY AB T2R 0E2
403 205 2295

PETRO-CANADA
A Suncor Energy Business

DRAWING TITLE:

SERVICING PLAN

PROJECT:

4000 RIVERSIDE DRIVE @ HUNT CLUB DRIVE

OTTAWA, ON

DRAWN BY:	CAD INFO.:
	SHEET SIZE D (559 x 864)
DRAWING SCALE: 1:250	PETRO–CANADA 250272
DATE DRAWN: 2025–07–30	CONSULTANT –
CHECKED BY:	PLOT SCALE 1:1
APPROVED BY: JS	PLOT DATE
	PLOT CONFIGURATION
STD No./OUTLET No. 35197	SHEET No. P301

REVISION TABLE			
REV.	DESCRIPTION	DRAWN	APP'D.
		DATE	
3	REVISED AS PER SITE PLAN	DL	JS
		DEC 17, 2025	

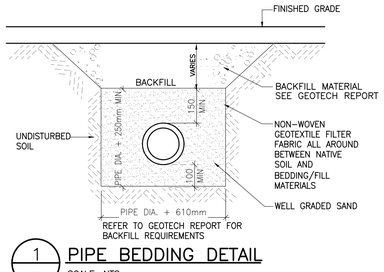

1 – PIPE BEDDING DETAIL
SCALE: NTS

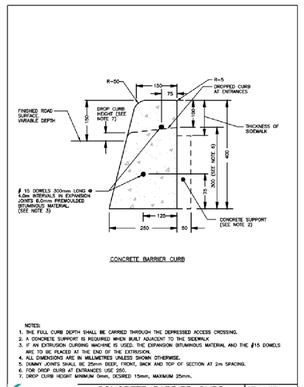

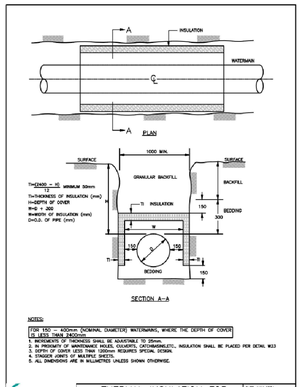

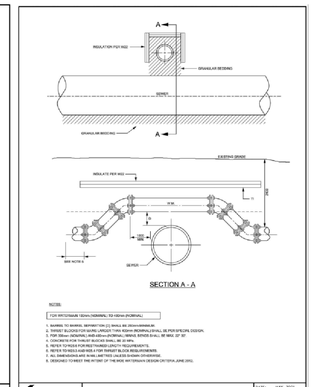

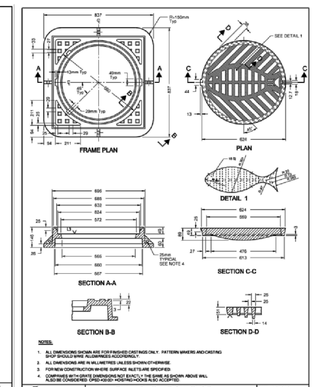

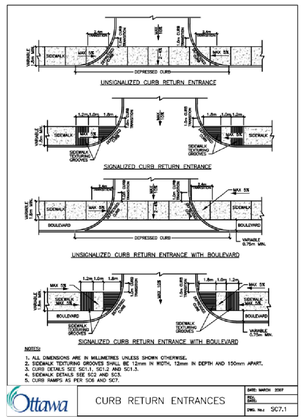

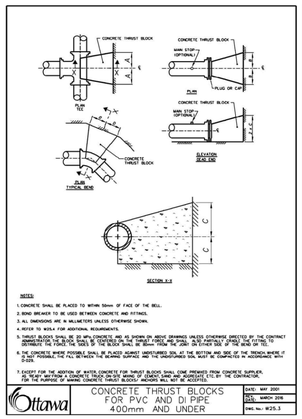

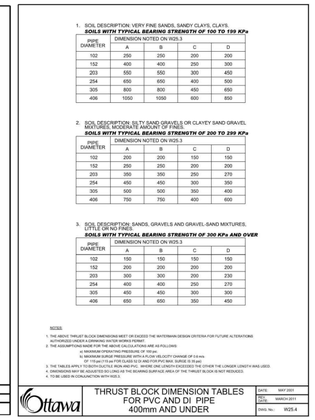
1. SOIL DESCRIPTION: VERY FINE SANDS, SANDY CLAYS, CLAYS
SOILS WITH TYPICAL BEARING STRENGTH OF 150 TO 199 KPa

PIPE DIAMETER	DIMENSION NOTED ON W25.3 A	B	C	D
102	250	250	200	200
152	400	400	250	300
203	550	550	300	450
254	650	650	400	500
305	800	800	450	650
406	1050	1050	600	850

2. SOIL DESCRIPTION: SILTY SAND-GRAVELS OR CLAYEY SAND GRAVEL MIXTURES, MODERATE AMOUNTS OF FINES
SOILS WITH TYPICAL BEARING STRENGTH OF 200 TO 299 KPa

PIPE DIAMETER	DIMENSION NOTED ON W25.3 A	B	C	D
102	200	200	150	150
152	250	250	200	200
203	350	350	250	270
254	450	450	300	350
305	500	500	350	400
406	750	750	400	600

3. SOIL DESCRIPTION: SANDS, GRAVELS AND GRAVEL-SAND MIXTURES, LITTLE OR NO FINES
SOILS WITH TYPICAL BEARING STRENGTH OF 300 KPa AND OVER

PIPE DIAMETER	DIMENSION NOTED ON W25.3 A	B	C	D
102	150	150	150	150
152	200	200	200	200
203	300	300	200	230
254	400	400	250	270
305	450	450	300	300
406	650	650	350	450

NOTES:
1. THE ABOVE THRUST BLOCK DIMENSIONS MEET OR EXCEEDS THE WATERMAIN DESIGN CRITERIA FOR FUTURE ALTERATIONS.
2. THE ASSUMPTIONS MADE FOR THE ABOVE CALCULATIONS ARE AS FOLLOWS:
   a) MAXIMUM SOIL BEARING STRESS AS SHOWN
   b) MAXIMUM SURGE PRESSURE WITH A FLOW VELOCITY CHANGE OF 3.0 m/s
   c) 1P 110 and 170 as FOR CLASS 52 D AND FOR PVC MAX. SURGE 35 kpa)
3. THE TABLES ARE APPLICABLE TO BOTH DUCTILE IRON AND PVC. WHERE ONE LENGTH EXCEEDED THE OTHER THE LONGER LENGTH WAS USED.
4. DIMENSIONS MAY BE ADJUSTED SO LONG AS THE BEARING SURFACE AREA OF THE THRUST BLOCK IS NOT REDUCED.
5. TO BE USED IN CONJUNCTION WITH W25.3.

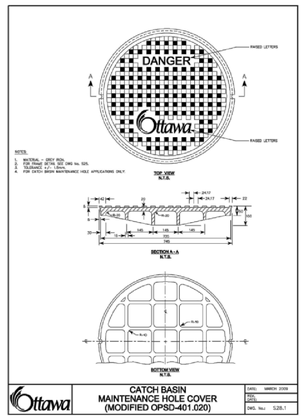

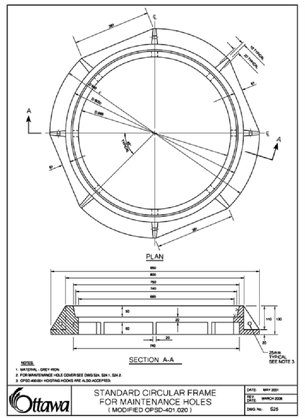

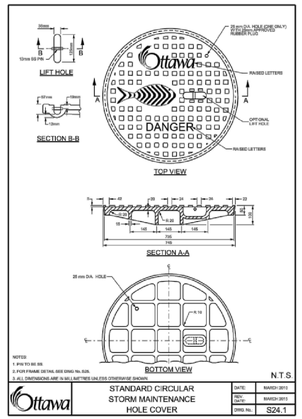

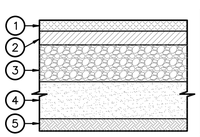

PAVING SCHEDULE

ITEM NO.	MATERIAL DESCRIPTION	LIGHT DUTY	HEAVY DUTY	COMPACTION REQUIREMENTS
1	HL-3 WEAR COURSE	50mm	40mm	> 97% (MBD)
2	HL-8 BINDER COURSE	–	50mm	> 97% (MBD)
3	GRANULAR BASE COURSE (OPSS GRANULAR A CRUSHED STONE)	150mm	150mm	> 100% (SPMDD)
4	GRANULAR SUB-BASE COURSE (OPSS GRANULAR B TYPE II)	300mm	300mm	> 100% (SPMDD)
5	SUBGRADE (TO BE RESHAPED)	VARIES	VARIES	> 100% (SPMDD)

MBD: MARSHALL BULK DENSITY
SPMDD: STANDARD PROCTOR MAX. DRY DENSITY
PAVEMENT STRUCTURE AS PER GEOTECHNICAL REPORT BY
JOHN D. PATERSON AND ASSOCIATES LIMITED, DATED MARCH 24, 2002

2 – TYP. SECTION THROUGH PAVEMENT
SCALE: NTS

GRADING AND SERVICES NOTES

1. ALL DIMENSIONS AND ELEVATIONS ARE METRIC, UNLESS NOTED OTHERWISE.
2. ALL DIMENSIONS AND DESIGN ELEVATIONS MUST BE VERIFIED BY THE CONTRACTOR PRIOR TO CONSTRUCTION. ANY DISCREPANCIES MUST BE BROUGHT TO THE ATTENTION OF THE DESIGN ENGINEER OR ARCHITECT WHERE APPLICABLE.
3. THE CONTRACTOR SHALL RESTORE TO ORIGINAL OR BETTER CONDITION FOR ANY EXISTING CONDITION DISTURBED DURING THE CONSTRUCTION AT CONTRACTOR'S EXPENSE.
4. CONTROL MANHOLES ARE TO BE BENCHED TO THE INVERTS.
5. LANDSCAPING SHALL NOT ENCROACH ON BOULEVARD NOR SHALL BOULEVARD GRADES BE ALTERED.
6. STANDARD DRAWINGS OF THE CITY CONSTITUTE PART OF THE PLANS OF THE CONTRACT.
7. ANY CONFLICT WITH EXISTING SERVICES SHALL BE RECTIFIED AS PER CITY'S REQUIREMENTS.
8. MINIMUM VERTICAL AND HORIZONTAL SEPARATION BETWEEN THE INVERTS OF THE SEWER AND A CROWN OF A WATER MAIN SHALL COMPLY WITH THE MUNICIPAL AND LOCAL BY-LAWS AT ALL CROSSINGS.
9. CONSTRUCT PAVEMENT AS SPECIFIED. SEE PAVEMENT STRUCTURE DETAILS 1/P-304.
10. ALL CONCRETE CURBS FROM EXISTING ROAD CURB TO STREET LINE SHALL BE BARRIER CURB TO CITY STANDARDS. ALL CONCRETE CURB HEIGHTS SHALL BE 150mm ABOVE FINISHED GRADE (A.F.G.) UNLESS OTHERWISE NOTED. DRIVEWAY CURBS ARE TO BE DISCONTINUOUS AT SIDEWALKS AND TAPERED BACK MINIMUM OF 300mm OR TO THE APPROVAL OF DESIGN ENGINEER.
11. ALL REQUIRED CURB CUTTING AT ENTRANCES AND CURB DEPRESSIONS AT SIDEWALK CROSSINGS SHALL BE INSTALLED TO THE APPROVAL OF THE DESIGN ENGINEER.
12. A MINIMUM CLEARANCE OF 1000mm FROM ALL ABOVE GROUND SERVICES AND UTILITIES IS REQUIRED.
13. INSTALLATION OF WATER MAIN IN PRIVATE PROPERTY SHALL COMPLY WITH THE MUNICIPAL AND LOCAL BY-LAWS.
14. OUTDOOR LIGHTS ARE TO BE DIRECTED DOWNWARDS AS WELL AS INWARD.
15. THE CONTRACTOR IS RESPONSIBLE FOR LOCATING AND PROTECTING ALL UTILITIES DURING CONSTRUCTION. BELL, HYDRO, GAS, OR ANY OTHER UTILITIES THAT MAY EXIST ON THE SITE OR WITHIN THE STREET LINE MUST BE LOCATED AND VERIFIED BY THE RESPECTIVE UTILITY COMPANY PRIOR TO CONSTRUCTION.
16. ALL SANITARY SEWER, STORM SEWER, AND WATER MAIN ON PRIVATE PROPERTY ARE TO BE INSTALLED IN ACCORDANCE WITH THE PROVINCIAL BUILDING CODE.
17. ALL WATER MAIN AND HYDRANT INSTALLATIONS ARE TO BE CARRIED OUT IN ACCORDANCE WITH THE LATEST PLANS, STANDARDS, AND SPECIFICATIONS OF THE LOCAL UTILITIES COMMISSION.
18. NO BLASTING IS PERMITTED ON THE CITY RIGHT-OF-WAY AND NEAR ANY ADJACENT BUILDING.
19. THE TOP OF CONCRETE CURBS ABUTTING CITY'S SIDEWALKS SHALL BE KEPT LEVEL WITH THE SIDEWALKS FOR A DISTANCE OF 600mm FROM THE SIDEWALK.
20. THE PROPERTY IS TO BE GRADED AND SELF-CONTAINED SO THAT SURFACE DRAINAGE IS DIRECTED AWAY FROM THE BUILDINGS.
21. THE OWNER AND/OR CONTRACTOR IS REQUIRED TO OBTAIN A "ROAD CUT PERMIT" FROM THE CITY BEFORE COMMENCING ANY WORK ON THE CITY'S ROAD ALLOWANCE.
22. WHEN THE DEPTH OF THE COVER OVER THE PROP. SANITARY OR STORM SEWERS IS LESS THAN 2.0m SEWER LINES ARE TO BE INSULATED. THE INSULATION TO BE STYROFOAM BRAND H.I. TYPE IV OR EQUAL

REVISION TABLE

REV.	DESCRIPTION	DRAWN	APP'D.	DATE

REVISION TABLE

REV.	DESCRIPTION	DRAWN	APP'D.	DATE
0	PRELIMINARY DESIGN	DL	JS	OCT 17, 2025
1	1st REVISION AS PER COMMENT	DL	JS	OCT 24, 2025
2	2nd REVISION AS PER COMMENT	DL	JS	OCT 27, 2025

ISSUE TABLE

TO	FOR	DATE
SUNCOR	FOR REVIEW	22 OCT '25
SUNCOR	FOR REVIEW	24 OCT '25
SUNCOR	FOR REVIEW	30 OCT '25
CITY	FOR SPA	17 DEC '25

METRIC
ALL DIMENSIONS ARE IN MILLIMETRES U.N.O.. CONTRACTOR TO CHECK/VERIFY ALL DIMENSIONS PRIOR TO COMMENCEMENT OF WORK. ALL DESCREPANCIES TO BE REPORTED TO THE PROJECT DESIGNER. DO NOT SCALE DRAWINGS.

SEAL
LICENSED PROFESSIONAL ENGINEER
M. Y. SAM
100127775
DEC 17, 2025
PROVINCE OF ONTARIO

CONSULTANT
J + B ENGINEERING INC.
TORONTO
25 CENTURIAN DR.
SUITE 201
MARKHAM, ON L3R 5N8
416 229 2936
CALGARY
1010 - 24TH AVE. SW
SUITE 200
CALGARY AB T2R 0E2
403 355 2295

PETRO-CANADA
A Suncor Energy Business

DRAWING TITLE:
NOTES AND DETAILS

PROJECT:
4000 RIVERSIDE DRIVE @ HUNT CLUB DRIVE
OTTAWA, ON

DRAWN BY:
DRAWING SCALE: 1:250
DATE DRAWN: 2025-07-30
CHECKED BY:
APPROVED BY: JS

CAD INFO.:
SHEET SIZE D (559 x 864)
PETRO-CANADA 250272
CONSULTANT –
PLOT SCALE 1:1
PLOT DATE
PLOT CONFIGURATION

STD No./OUTLET No. **35197**
SHEET No. **P304**